F.A.I. RTE.	SECTION	COUNTY	TOTAL SHEETS	SHEET NO.
90	1414B	COOK	74	43
FED. ROAD DIST. NO. 7	ILLINOIS	FED. AID PROJECT		

CONTRACT NO. 60384

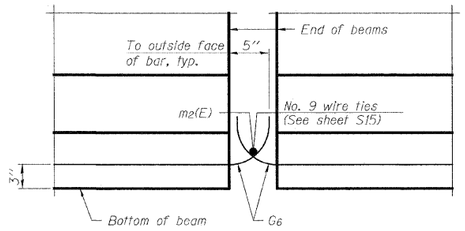

ELEVATION OF BEAM AT PIER

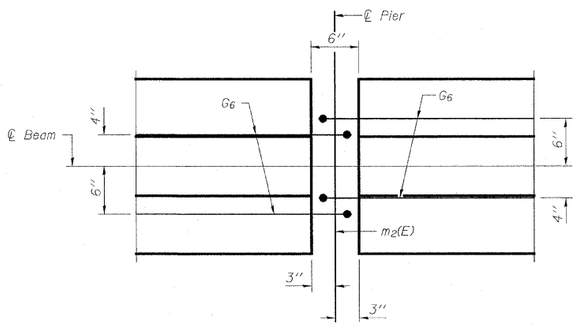

PLAN OF BEAM AT PIER

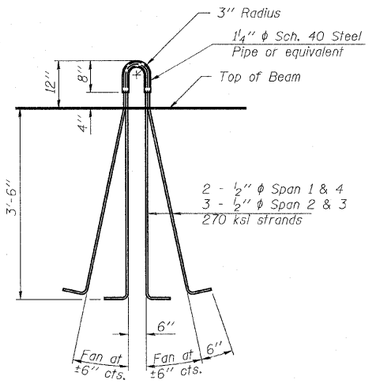

LIFTING LOOP DETAIL

NOTES

Inserts for ¾" ϕ threaded dowel rods, when specified, are to be two strut, coil type for interior beams and single coil, flared loop type for exterior beams.

Prestressing steel shall be uncoated high strength, low relaxation 7-wire strand, Grade 270.

The nominal diameter shall be ½" and the nominal cross-sectional area shall be 0.153 sq. in.

Non-prestressing steel shall conform to ASTM A 706 (IL MOD), Grade 60.

A minimum 2½" ϕ lifting pin shall be used to engage the lifting loops during handling.

Cut G_6 bars when necessary to maintain 1½" clearance.

The top and bottom plates shall be AASHTO M270 Grade 50.

The bottom plates and studs shall be galvanized according to AASHTO M111

Threaded rods shall be ASTM F 1554 Grade 55.

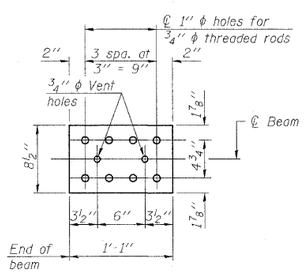

TOP PLATE

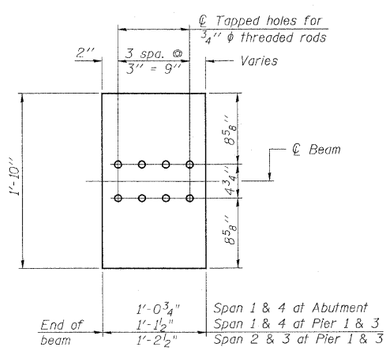

BOTTOM PLATE

(Showing threaded rods)

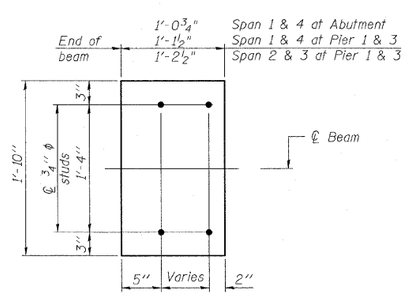

BOTTOM PLATE

(Showing studs)

See bearing details for pintle hole locations when required.

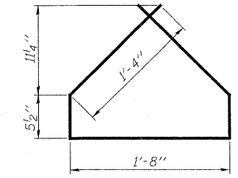

BAR G_4

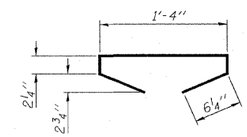

BAR G_5

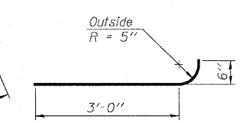

BAR G_6

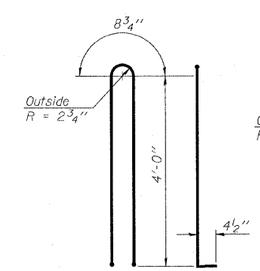

BAR G_1

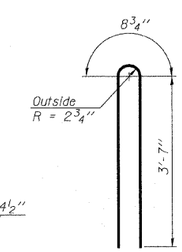

BAR G_2

PATRICK ENGINEERING INC.
LISLE, ILLINOIS

REVISIONS	
NAME	DATE

ILLINOIS DEPARTMENT OF TRANSPORTATION

PRESTRESSED BEAM DETAILS
FA ROUTE 173 (SAYRE AVENUE) OVER
INTERSTATE 90 (KENNEDY EXPRESSWAY)
COOK COUNTY STATION 8+02.48
SECTION 267-1414-15D
STRUCTURE NO. 016-1104

SCALE: NONE DRAWN BY: R. Clinton
DATE: DEC. 2007 CHECKED BY: G. Hatlestad