F.A.I. RTE.	SECTION	COUNTY	TOTAL SHEETS	SHEET NO.
90	1414B	COOK	74	50
FED. ROAD DIST. NO. 7	ILLINOIS	FED. AID PROJECT		

CONTRACT NO. 60384

- Indicates Concrete Placed after Superstructure Forms Have Been Removed. Quantity of Concrete Included with Concrete Superstructures.

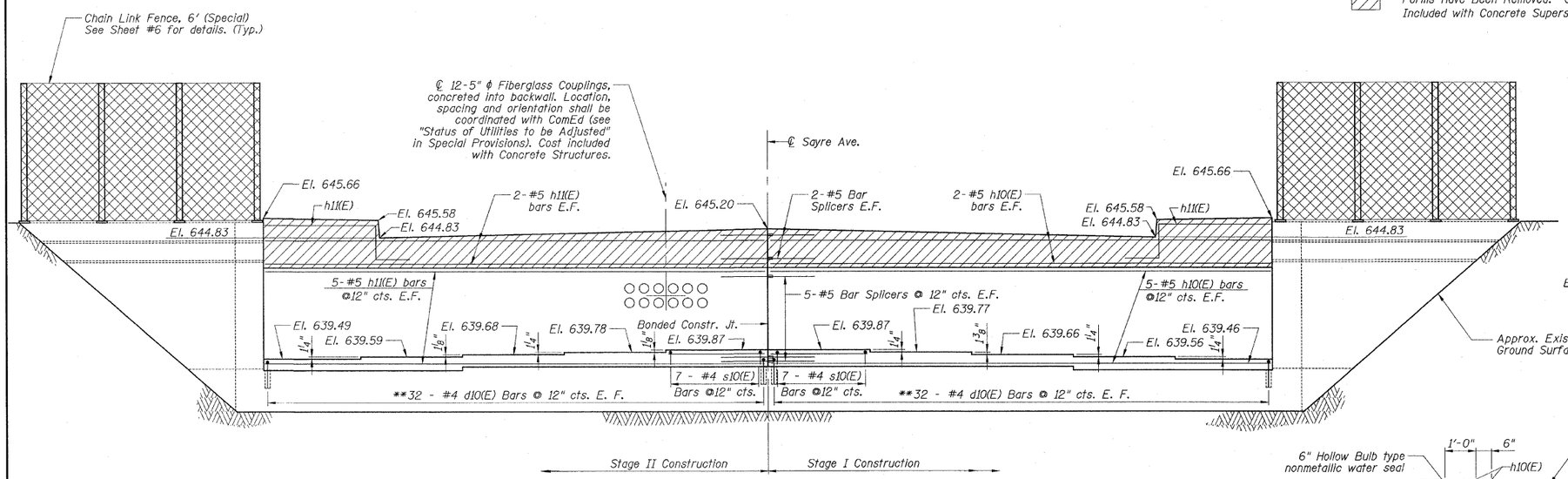

ELEVATION
(Looking South)

** - Epoxy grout d10(E) bars in 9" min. drilled holes according to Section 584 or the Standard Specifications

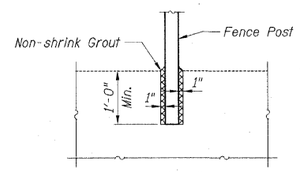

DETAIL "A"

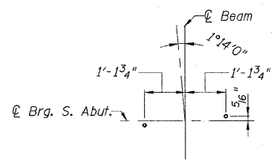

ANCHOR BOLT LOCATION

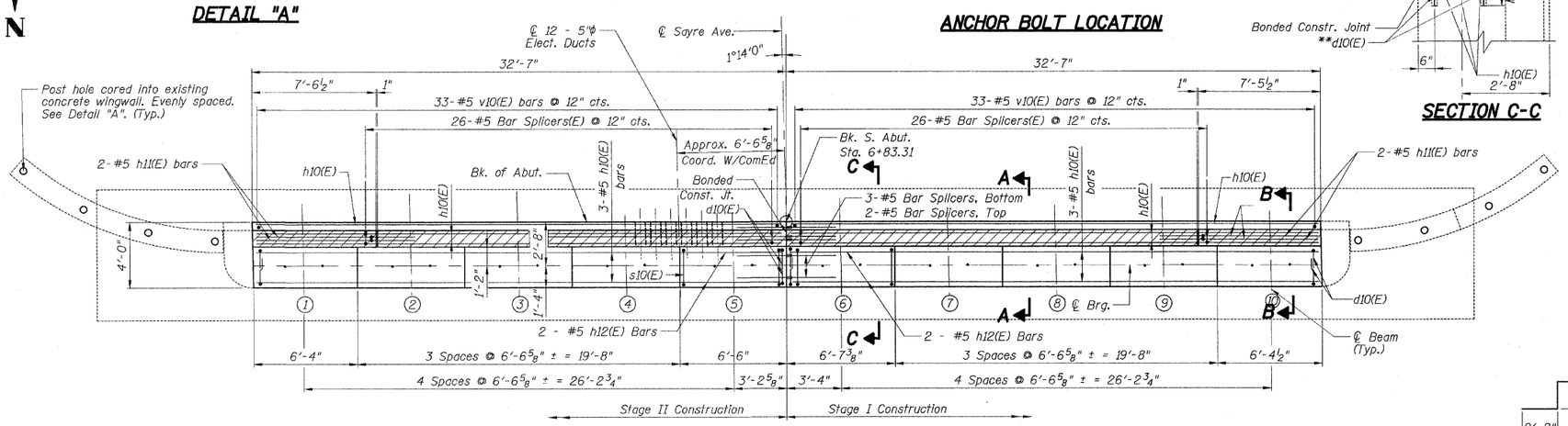

PLAN

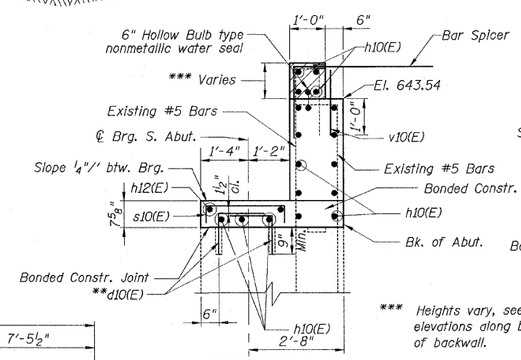

SECTION C-C

*** Heights vary, see Elevation view for elevations along bridge seat and top of backwall.

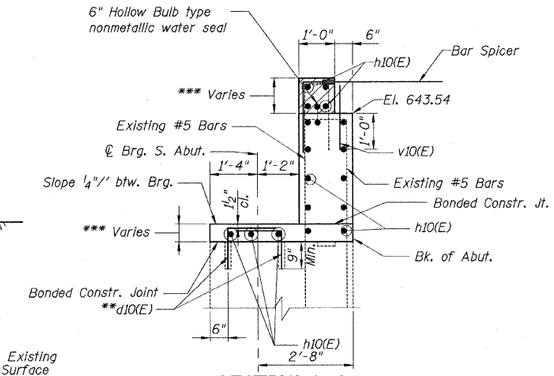

SECTION A-A

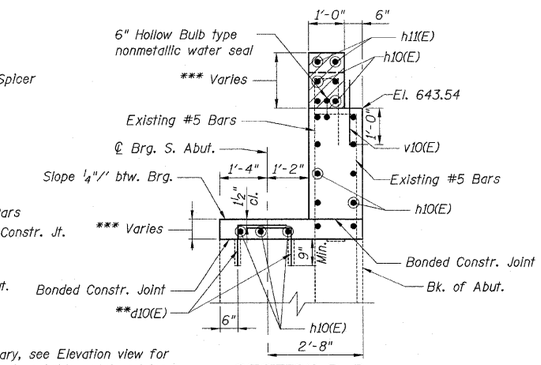

SECTION B-B

BILL OF MATERIAL

Bar	No.	Size	Length	Shape
d10(E)	128	4	2'-4"	
h10(E)	34	5	32'-2"	
h11(E)	4	5	11'-0"	
h12(E)	4	5	6'-2"	
s10(E)	14	4	2'-10"	
v10(E)	66	5	2'-0"	
* Porous Granular Embankment (Special)			Cu. Yd.	92
Concrete Structures			Cu. Yd.	18.3
Reinforcement Bars, Epoxy Coated			Pound	1,580
Concrete Sealer			Sq. Ft.	163
Bar Splicers			Each	71

* See Special Provisons

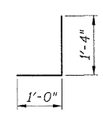

Bar d10(E)

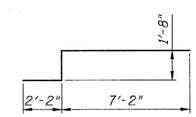

Bar h11(E)

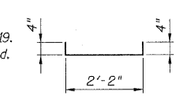

Bar s10(E)

Notes:

Space reinforcement in cap to miss anchor bolts.
For Anchor Bolt Installation see Sheet S17.
For S. Abutment Repair and Concrete Removal see Sheet S19.
All edges shall have a standard ¾" chamfer except as noted.

REVISIONS	
NAME	DATE

ILLINOIS DEPARTMENT OF TRANSPORTATION
SOUTH ABUTMENT REHABILITATION
FA ROUTE 173 (SAYRE AVENUE) OVER
INTERSTATE 90 (KENNEDY EXPRESSWAY)
COOK COUNTY STATION 8+02.48
SECTION 267-1414-15D
STRUCTURE NO. 016-1104

SCALE: NONE DRAWN BY: R. Clinton
DATE: DEC. 2007 CHECKED BY: G. Hatlestad

PATRICK ENGINEERING INC.
LISLE, ILLINOIS