STATE OF ILLINOIS
DEPARTMENT OF TRANSPORTATION

ROUTE NO.	SECTION	COUNTY	TOTAL SHEETS	SHEET NO.
FAI 74	*	ROCK ISLAND	246	206
FED. ROAD DIST. NO. 7		ILLINOIS	FED. AID PROJECT-	

SHEET NO. 8
12 SHEETS

* 81 (1-2, 1, 2-2) RS-1 & M

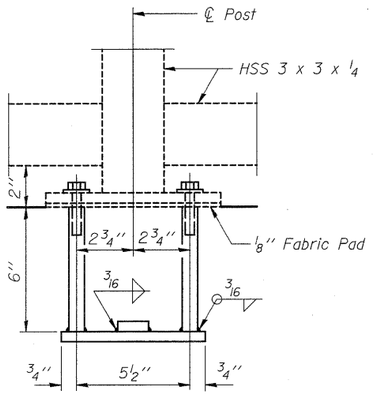

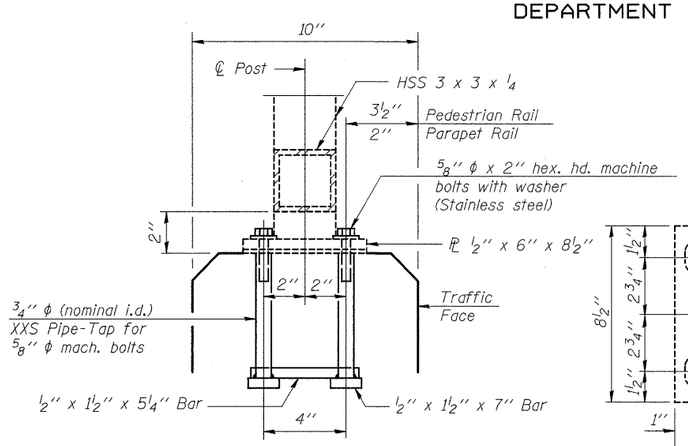

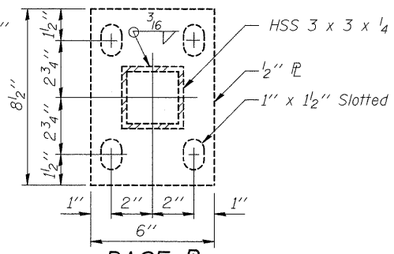

BASE PL

ANCHOR BOLT DETAILS FOR PARAPET RAILING & PEDESTRIAN RAILING

In lieu of the cast-in-place anchor device shown, the Contractor has the option of drilling and setting 5/8" ϕ anchor rods according to Article 509.06 of the Standard Specifications. Embedment shall be according to the manufacturer's specifications.

New Anchor Bolts will be required at each location where posts are connected to new construction. Cost shall be included with Concrete Superstructure.

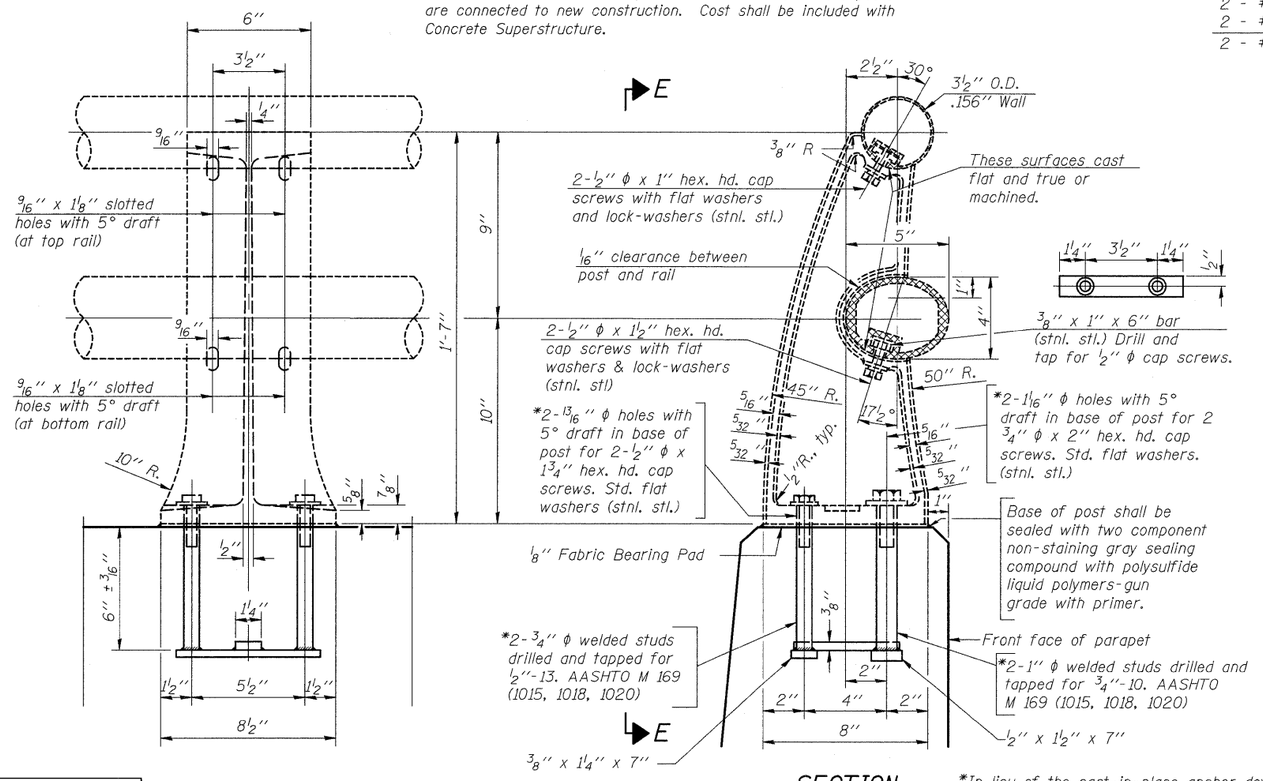

VIEW E-E

SECTION THROUGH RAIL

RAIL POST DETAILS

*In lieu of the cast-in-place anchor device shown, the Contractor has the option of drilling and setting stainless steel anchor rods of the same diameter and grade as the specified cap screws according to Article 509.06 of the Standard Specifications. Embedment shall be according to the manufacturer's specifications. New railpost anchorage devices will be required at each location where posts are connected to new construction. Cost shall be included with Concrete Superstructure.

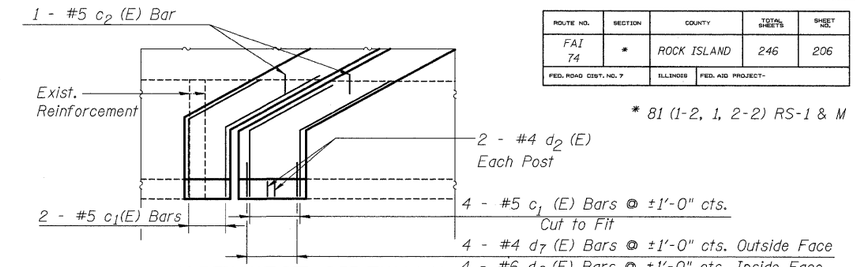

NORTHWEST SIDEWALK
(All Exist. Reinforcement not shown)

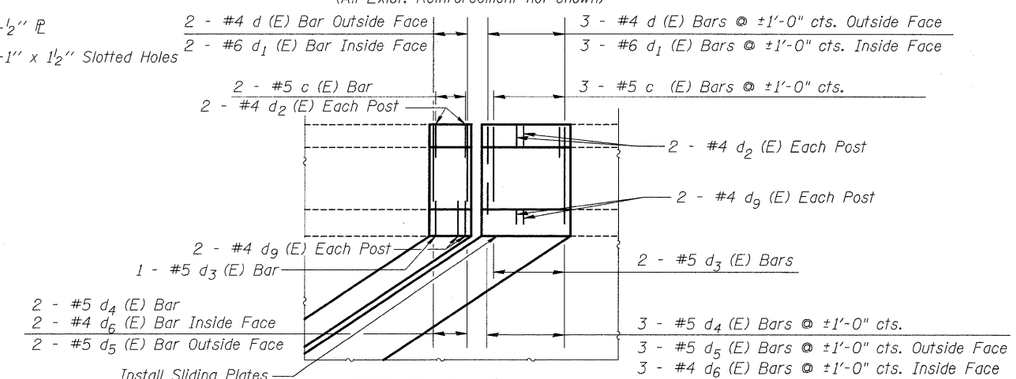

NORTHEAST SIDEWALK
(All Exist. Reinforcement not shown)

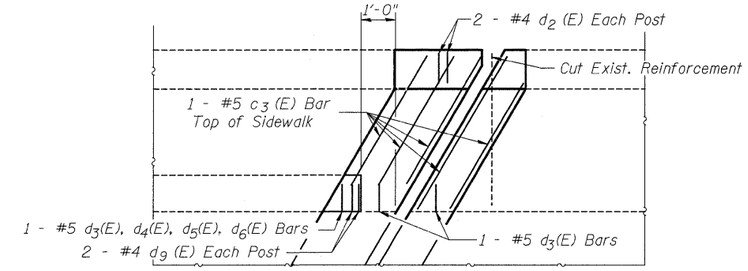

SOUTHEAST SIDEWALK
(All Exist. Reinforcement not shown)

See sheets 6 & 7 of 12 for sections through Sidewalks.

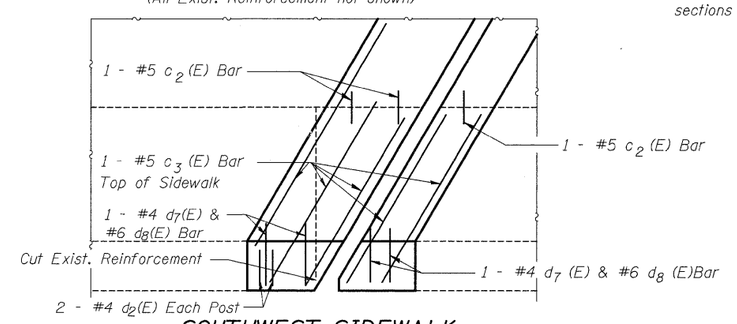

SOUTHWEST SIDEWALK
(All Exist. Reinforcement not shown)

DESIGNED	DFM
CHECKED	DSG
DRAWN	EBS
CHECKED	DFM

RAILING AND MISCELLANEOUS DETAILS
N.B. 27TH ST. OVER F.A.I. 74
ROCK ISLAND COUNTY
STRUCTURE NO. 081-0108