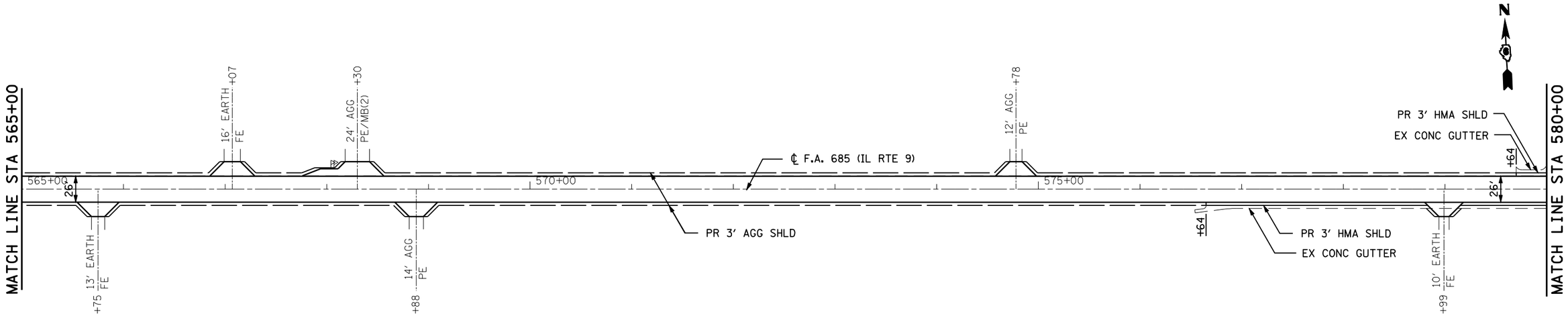


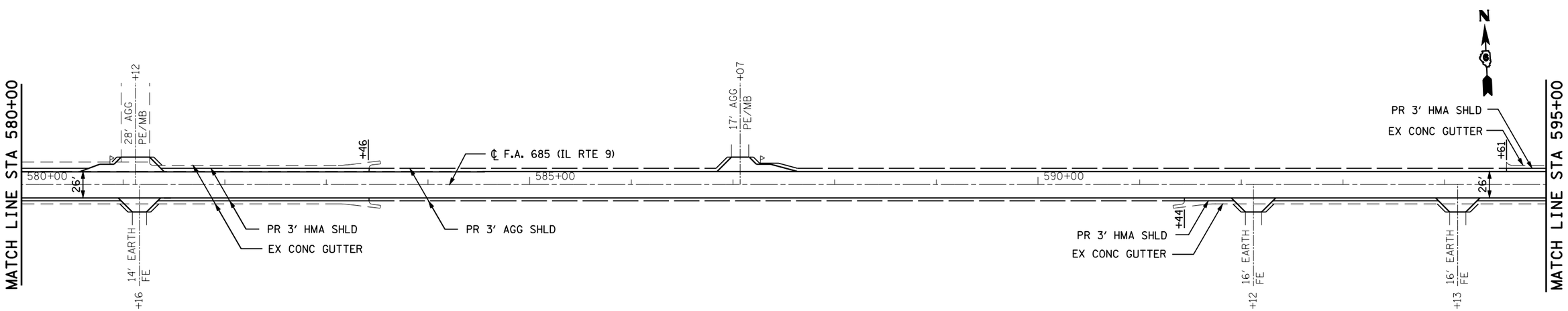


| | | | | | | | | | |
|---|---|---|---|---|---|---|---|---|---|
| FILE NAME = $FILEABBREV$ | USER NAME = laughlnrl | DESIGNED - MJS | REVISED - | STATE OF ILLINOIS DEPARTMENT OF TRANSPORTATION | ALIGNMENT SCHEMATIC ILLINOIS ROUTE 9 DALLAS CITY TO LA HARPE | F.A.P RTE. | SECTION | COUNTY | TOTAL SHEETS / SHEET NO. |
| | | DRAWN - | REVISED - | | | 685 | D-6 Resurfacing 2011-1 | Hancock | 44 / 24 |
| THE UPCHURCH GROUP, INC. | PLOT SCALE = 100.000 ' / IN. | CHECKED - | REVISED - | | | | | CONTRACT NO. 72983 | |
| | PLOT DATE = Feb-06-2009 [illegible] | DATE - FEB 2008 | REVISED - | | SCALE: SHEET NO. OF SHEETS STA. 565+00 TO STA. 595+00 | FED. ROAD DIST. NO. 5 | ILLINOIS | FED. AID PROJECT | |