CONTRACT NO. 64647

F.A.P. RTE.	SECTION	COUNTY	TOTAL SHEETS	SHEET NO.
595	1-3-K	ROCKISLAND	476	237A
STA. _____	TO STA. _____			
FED. ROAD DIST. NO.	ILLINOIS	FED. AID PROJECT		

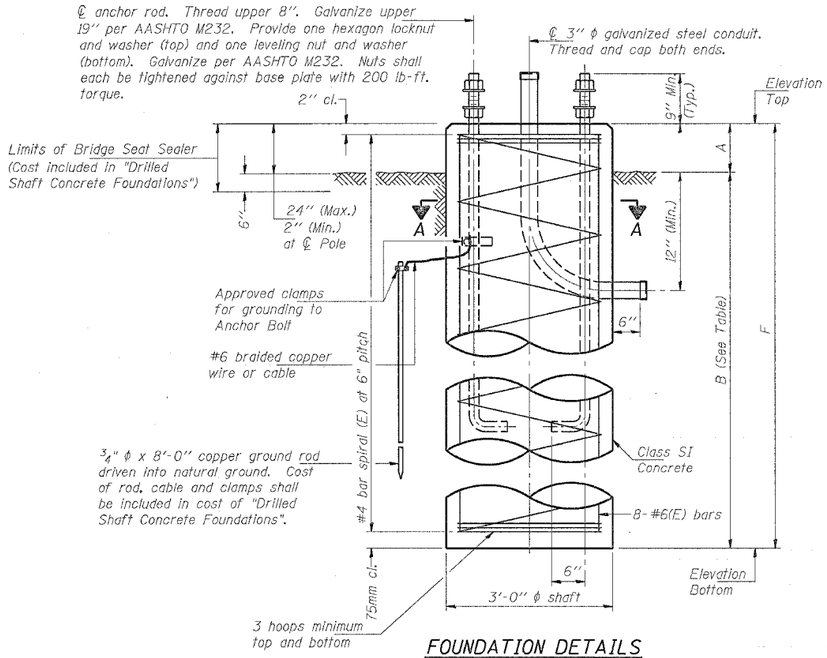

FOUNDATION DETAILS

Typical, except conduit may only be required at one foundation. Provide conduit openings both poles.

Foundation Design Table	
Span (Ft.)	B (Ft.)
Span ≤ 65	12
65 < Span ≤ 85	13
85 < Span ≤ 100	14

FOUNDATIONS:

The foundation dimensions shown are based on the presence of mostly cohesive soils with an average Unconfined Compressive Strength (Qu) of at least 1.25 tsf, which must be determined by previous soil investigations at the jobsite. When other conditions are indicated, the boring data will be included in the plans and the foundation dimensions shown will be the result of site specific designs.

If the conditions encountered are different than those indicated, the Contractor shall notify the Engineer to determine if the foundation dimensions need to be modified. If dimensions "B" or "F" are revised by more than 12" by the Contractor, "as-built" plans shall be prepared and submitted to the District Bureau of Operations for future reference.

No sonotubes or decomposable forms shall be used below the lower conduit entrance.

Permanent metal forms or other shielding may not be left in place below that elevation without the Engineer's written permission.

Concrete shall be placed monolithically, without construction joints.

Backfill shall be placed per Article 502 of Standard Specification and prior to erection of support column.

A normal surface finish followed by a Bridge Seat Sealer application will be required on concrete surfaces above the lowest elevation 6" below finished ground line. Cost included in "Drilled Shaft Concrete Foundation".

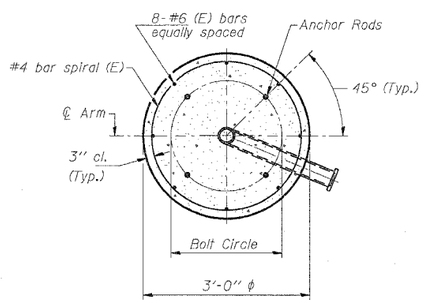

SECTION A-A

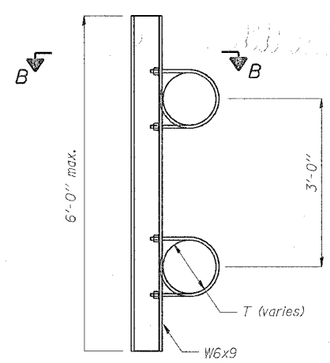

SIGN MOUNTING BRACKET

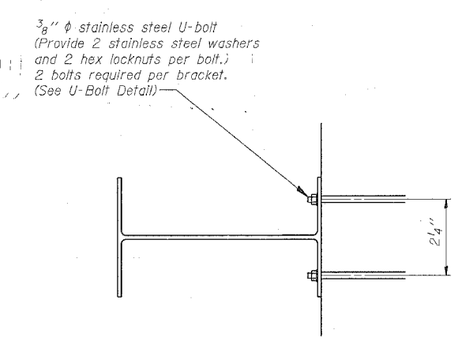

SECTION B-B

6'-0" maximum spacing.
2'-0" maximum sign overhang beyond end bracket.

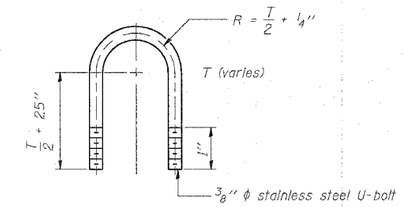

U-BOLT DETAIL

(Typical)

DUAL MONOTUBE SIGN STRUCTURE

REVISIONS NAME	DATE

ILLINOIS DEPARTMENT OF TRANSPORTATION

SCALE: VERT. HORIZ.

DATE

DRAWN BY

CHECKED BY

DUAL TUBE - 2 11/1/2002

PLOT DATE = Wed Dec 22 13:55:36 2004
FILE NAME = C:\Documents and Settings\hautaker.g\Desktop\bailey nor-tr\d17500\sign sheets.dgn
PLOT SCALE = 20.0000 ' / IN.
REFERENCE = REF