4-23-10 LETTING ITEM 319

| F.A.P. RTE. | SECTION | COUNTY | TOTAL SHEETS | SHEET NO. |
|---|---|---|---|---|
| * | 2009-089 I | ** | 46 | 1 |
| | ILLINOIS | CONTRACT NO. 60137 | | |

* 525 / 345 (US 20)
** McHENRY & KANE

D-91-032-10

# STATE OF ILLINOIS
# DEPARTMENT OF TRANSPORTATION
# DIVISION OF HIGHWAYS

# PROPOSED
# HIGHWAY PLANS

## FAP ROUTE 525 /345 (US 20)
## W. UNION RD TO IL 47
## SECTION 2009–089 I
## PROJECT: ACHSIP-0005(816)
## HMA SHOULDERS, RUMBLE STRIPS, GUARDRAIL AND TRAFFIC SIGNAL MODERNIZATION
## McHENRY AND KANE COUNTY
## C–91–032–10

FOR INDEX OF SHEETS, SEE SHEET NO. 2

**TRAFFIC DATA**
EXISTING ADT = 6,500 TO 10,700 (2007)
SPEED LIMIT = 45 TO 55 MPH

THE IMPROVEMENT IS LOCATED IN UNINCORPORATED KANE AND McHENRY COUNTIES

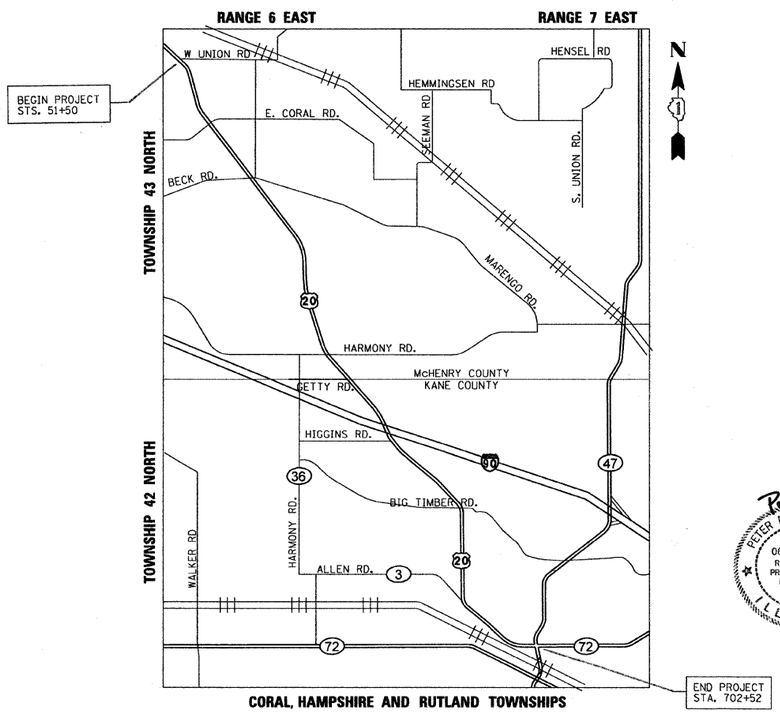


CORAL, HAMPSHIRE AND RUTLAND TOWNSHIPS
GROSS LENGTH = 65,102 FT. = 12.33 MILE
NET LENGTH = 65,102 FT. = 12.33 MILE

LOCATION OF SECTION INDICATED THUS:–

100' 200' 300' — 1" = 100'
10' 20' 30' — 1" = 10'
50' 100' — 1" = 50'
50' 100' — 1" = 40'
50' 100' — 1" = 30'
50' 100' — 1" = 20'

FULL SIZE PLANS HAVE BEEN PREPARED USING STANDARD ENGINEERING SCALES. REDUCED SIZED PLANS WILL NOT CONFORM TO STANDARD SCALES. IN MAKING MEASUREMENTS ON REDUCED PLANS, THE ABOVE SCALES MAY BE USED.

J.U.L.I.E.
JOINT UTILITY LOCATION INFORMATION FOR EXCAVATION
1–800–892–0123
OR 811

PETER M. JOHNSTON 062-047647 REGISTERED PROFESSIONAL ENGINEER OF ILLINOIS
Peter M. Johnston 2-8-10
Expires 11-30-11

GRAEF 8501 W. Higgins Road; Suite 280 Chicago, Illinois 60631 (773) 399-0112

PROJECT ENGINEER: PETER JOHNSTON (GRAEF) 773–399–0012
PROJECT MANAGER: KEN ENG (IDOT) 847–705–4247

CONTRACT NO. 60137

STATE OF ILLINOIS
DEPARTMENT OF TRANSPORTATION
DIVISION OF HIGHWAYS

SUBMITTED February 9, 2010
Diane M. O'Keefe
DEPUTY DIRECTOR OF HIGHWAYS, REGION ENGINEER
March 19, 2010
Scott E. Stitt, P.E.
Acting ENGINEER OF DESIGN AND ENVIRONMENT
March 19, 2010
Christine M. Reed
DIRECTOR OF HIGHWAYS, CHIEF ENGINEER

PRINTED BY THE AUTHORITY OF THE STATE OF ILLINOIS

## INDEX OF SHEETS


| SHEET NO. | DESCRIPTION |
|---|---|
| 1 | COVER SHEET |
| 2 | INDEX, GENERAL NOTES AND HIGHWAY STANDARDS |
| 3 | SUMMARY OF QUANTITIES |
| 4-5 | SCHEDULE OF QUANTITIES |
| 6-8 | TYPICAL SECTIONS |
| 9-31 | ROADWAY AND PAVEMENT MARKING PLANS |
| 32-33 | TRAFFIC SIGNALS |
| 34 | DETAILS FOR DEPRESSED CURB AND GUTTER AND SHOULDER TREATMENT AT TBT TY 1 SPL (BD34) |
| 35 | TRAFFIC CONTROL AND PROTECTION FOR SIDEROADS, INTERSECTIONS AND DRIVEWAYS (TC10) |
| 36 | TRAFFIC CONTROL FOR SHOULDER CLOSURES AND PARTIAL RAMP CLOSURES (TC17) |
| 37 | TEMPORARY INFORMATION SIGNING (TC22) |
| 38-40 | POST MOUNTED FLASHING BEACON; POST MOUNTED FLASHING BEACON WITH PRECIPITATION DETECTOR (TS04) |
| 41-46 | STANDARD TRAFFIC SIGNAL DESIGN DETAILS (TS05) |


## HIGHWAY STANDARDS

| STD. NO. | TITLE |
|---|---|
| 482001-02 | HMA SHOULDER ADJACENT TO FLEXIBLE PAVEMENT |
| 630001-08 | STEEL PLATE BEAM GUARDRAIL |
| 630101-08 | GUARDAIL MOUNTED ON EXISTING CULVERTS |
| 630201-06 | PCC/HMA STABILZATION AT STEEL PLATE BEAM GUARDRAIL |
| 630301-05 | SHOULDER WIDENING FOR TYPE 1 (SPECIAL) GUARDRAIL TERMINALS |
| 635006-03 | REFLECTOR AND TERMINAL MARKER PLACEMENT |
| 635011-02 | REFLECTOR MARKER AND MOUNTING DETAILS |
| 642001-01 | SHOULDER RUMBLE STRIPS |
| 701006-03 | OFF-ROAD OPERATIONS, 2L, 2W, 15' (4.5 m) TO 24" (600 mm) FROM PAVEMENT EDGE |
| 701326-03 | LANE CLOSURE, 2L, 2W, PAVEMENT WIDENING, FOR SPEEDS ≥ 45 MPH |
| 701422-02 | LANE CLOSURE, MULTILANE, FOR SPEEDS ≥ 45 MPH TO 55 MPH |
| 701901-01 | TRAFFIC CONTROL DEVICES |
| 720001-01 | SIGN PANEL MOUNTING DETAILS |
| 720006-02 | SIGN PANEL ERECTION DETAILS |
| 728001-01 | TELESCOPING STEEL SIGN SUPPORT |

## GENERAL NOTES

1. BEFORE STARTING ANY EXCAVATION, THE CONTRACTOR SHALL CALL "J.U.L.I.E." AT 800-892-0123 OR "CUAN" (CHICAGO UTILITY ALERT NETWORK), 312-744-7000 FOR FIELD LOCATIONS OF BURIED ELECTRIC, TELEPHONE AND GAS FACILITIES (48 HOUR NOTIFICATION IS REQUIRED).
2. THE CONTRACTOR SHALL COORDINATE CONSTRUCTION ACTIVITIES WITH UTILITY COMPANIES AND LOCAL AGENCIES.
3. THE CONTRACTOR WILL NOT BE ALLOWED TO SET UP A YARD OR FIELD OFFICE ON STATE PROPERTY WITHOUT WRITTEN PERMISSION FROM THE DEPARTMENT.
4. THE RESIDENT ENGINEER SHALL CONTACT THE TRAFFIC CONTROL SUPERVISOR AT (847) 705-4470 A MINIMUM 72 HOURS PRIOR TO THE PLACEMENT OF ANY TEMPORARY TRAFFIC CONTROL DEVICES.
5. WHEN GUARDRAIL POSTS ARE PLACED BEHIND CONCRETE HEADWALLS, THE POSTS SHALL NOT BE PLACED TO BLOCK THE DRAINAGE OPENING.
6. WHEN MILLED PAVEMENT IS OPEN TO TRAFFIC THE MAXIMUM GRADE DIFFERENTIAL BETWEEN PASSES OF THE MILLING MACHINE SHALL NOT EXCEED 1 1/2 INCHES (40 MM) WHERE THE SPEED LIMIT IS 45 MPH (80 KM/H) OR LESS AND 1 INCH (25 MM) WHERE THE SPEED LIMIT IS GREATER THAN 45 MPH (80 KM/H). WITH WRITTEN APPROVAL FROM THE ENGINEER, A MAXIMUM GRADE DIFFERENTIAL OF 3 INCHES (75 MM) MAY BE ALLOWED IF THE EDGE OF THE MILLING IS SLOPED A MINIMUM 1:3 (V:H).

| HOT-MIX ASPHALT MIXTURE REQUIREMENTS | |
|---|---|
| MIXTURE TYPE | AIR VOIDS @ Ndes |
| HOT-MIX ASPHALT SURFACE COURSE, MIX "D", N70 (IL 9.5mm) - 2" | 4% @ 70 GYR |
| HOT-MIX ASPHALT SHOULDERS, 6" (HMA BINDER COURSE, IL-19mm) (IN 2 LIFTS) | 4% @ 70 GYR |

THE UNIT WEIGHT USED TO CALCULATE ALL HOT-MIX ASPHALT SURFACE MIXTURE A IS 112 LBS/SQ YD/IN.

THE "AC TYPE" FOR POLYMERIZED HMA MIXES SHALL BE "SBS/SBR PG 70-22" AND FOR NON-POLYMERIZED HMA THE "AC TYPE" SHALE BE "PG 64-22" UNLESS MODIFIED BY DISTRICT ONE SPECIAL PROVISIONS.

FOR "PERCENT OF RAP" SEE DISTRICT ONE SPECIAL PROVISIONS.

SUMMARY OF QUANTITIES

90% FED.
10% STATE
URBAN

| | PAY ITEM NUMBER | DESCRIPTION | UNIT | TOTAL QUANTITY | SFTY-2A KANE COUNTY | SFTY-2A McHENRY COUNTY | Y031-1F KANE COUNTY | Y031-1F McHENRY COUNTY |
|---|---|---|---|---|---|---|---|---|
| | 20200600 | EXCAVATING AND GRADING SHOULDER | UNIT | 1,283 | 590 | 693 | | |
| | 40600200 | BITUMINOUS MATERIALS (PRIME COAT) | TON | 43 | 20 | 23 | | |
| | 40603340 | HOT-MIX ASPHALT SURFACE COURSE, MIX "D", N70 | TON | 6,092 | 2,837 | 3,255 | | |
| | 44000157 | HOT-MIX ASPHALT SURFACE REMOVAL, 2" | SQ YD | 20,396 | 9,499 | 10,897 | | |
| | 44300200 | STRIP REFLECTIVE CRACK CONTROL TREATMENT | FOOT | 122,380 | 56,997 | 65,383 | | |
| | 48101500 | AGGREGATE SHOULDERS, TYPE B 6" | SQ YD | 3,546 | 1,583 | 1,963 | | |
| | 48102100 | AGGREGATE WEDGE SHOULDER, TYPE B | TON | 3,427 | 1,596 | 1,831 | | |
| | 48203021 | HOT-MIX ASPHALT SHOULDERS, 6" | SQ YD | 33,994 | 15,832 | 18,162 | | |
| * | 63000001 | STEEL PLATE BEAM GUARD RAIL, TYPE A 6 FOOT POSTS | FOOT | 325 | 325 | 0 | | |
| * | 63000005 | STEEL PLATE BEAM GUARD RAIL, TYPE B | FOOT | 350 | 350 | 0 | | |
| * | 63100167 | TRAFFIC BARRIER TERMINAL, TYPE 1 (SPECIAL) TANGENT | EACH | 72 | 18 | 54 | | |
| | 63200310 | GUARDRAIL REMOVAL | FOOT | 3,189 | 650 | 2,539 | | |
| | 64200105 | SHOULDER RUMBLE STRIP | FOOT | 116,365 | 54,385 | 61,980 | | |
| | 67000400 | ENGINEER'S FIELD OFFICE, TYPE A | CAL MO | 6 | 3 | 3 | | |
| | 67100100 | MOBILIZATION | L SUM | 1 | 0.5 | 0.5 | | |
| | 70100315 | TRAFFIC CONTROL AND PROTECTION, STANDARD 701422 | EACH | 1 | 0.5 | 0.5 | | |
| | 70100500 | TRAFFIC CONTROL AND PROTECTION, STANDARD 701326 | L SUM | 1 | 0.5 | 0.5 | | |
| * | 72000100 | SIGN PANEL - TYPE 1 | SQ FT | 965 | 452 | 514 | | |
| * | 72400100 | REMOVE SIGN PANEL ASSEMBLY - TYPE A | EACH | 133 | 60 | 73 | | |
| * | 72400310 | REMOVE SIGN PANEL - TYPE 1 | SQ FT | 6 | 0 | 6 | | |
| * | 72800100 | TELESCOPING STEEL SIGN SUPPORT | FOOT | 2,290 | 985 | 1,305 | | |
| * | 73000100 | WOOD SIGN SUPPORT | FOOT | 179 | 117 | 62 | | |
| * | 78000200 | THERMOPLASTIC PAVEMENT MARKING - LINE 4" | FOOT | 122,380 | 56,997 | 65,383 | | |
| * | 78200405 | GUARDRAIL MARKERS | EACH | 2 | 2 | 0 | | |
| * | 78201000 | TERMINAL MARKER DIRECT APPLIED | EACH | 72 | 18 | 54 | | |
| * | 85000300 | MAINTENANCE OF EXISTING TRAFFIC SIGNAL INSTALLATION | L SUM | 1 | | | 1 | 0 |
| * | 88030012 | SIGNAL HEAD, LED, 1-FACE, 1-SECTION, BRACKET MOUNTED | EACH | 2 | | | 2 | 0 |
| * | 88030020 | SIGNAL HEAD, LED, 1-FACE, 3-SECTION, MAST-ARM MOUNTED | EACH | 4 | | | 4 | 0 |
| * | 88030070 | SIGNAL HEAD, LED, 1-FACE, 4-SECTION, BRACKET MOUNTED | EACH | 2 | | | 2 | 0 |
| * | 88030080 | SIGNAL HEAD, LED, 1-FACE, 4-SECTION, MAST ARM MOUNTED | EACH | 2 | | | 2 | 0 |
| * | 88030100 | SIGNAL HEAD, LED, 1-FACE, 5-SECTION, BRACKET MOUNTED | EACH | 2 | | | 2 | 0 |
| * | 88030110 | SIGNAL HEAD, LED, 1-FACE, 5-SECTION, MAST-ARM MOUNTED | EACH | 2 | | | 2 | 0 |
| * | 88200210 | TRAFFIC SIGNAL BACKPLATE, LOUVERED, ALUMINUM | EACH | 8 | | | 8 | 0 |
| * | 89502375 | REMOVE EXISTING TRAFFIC SIGNAL EQUIPMENT | EACH | 1 | | | 1 | 0 |
| Δ | X2503100 | MOWING | UNIT | 235 | 79 | 156 | | |
| | X0322256 | TEMPORARY INFORMATION SIGNING | SQ FT | 1,028 | 514 | 514 | | |
| | X0325917 | TURF ESTABLISHMENT | SQ YD | 2,454 | 726 | 1,728 | | |
| * | X0325714 | FLASHING BEACON, POST MOUNTED, SOLAR POWERED INSTALLATION | EACH | 10 | | | 4 | 6 |
| * | X8803080 | SIGNAL HEAD, LED, 1-FACE, 1-SECTION, BRACKET MOUNTED, RETROFIT | EACH | 7 | | | 0 | 7 |

Δ NON-PARTICIPATING
* DENOTES SPECIALTY ITEM

H:\Jobs2009\20093023-I5\CAD\Site\dgn\00\D16037-sht-500.dgn
2/10/2010 2:06:49 PM

| | | | |
|---|---|---|---|
| FILE NAME = $FILEL$ | USER NAME = _USER_ | DESIGNED - EF | REVISED - |
| | | DRAWN - EF | REVISED - |
| | PLOT SCALE = 50.0000 ' / IN. | CHECKED - RS | REVISED - |
| | PLOT DATE = 2/10/2010 | DATE - 02-08-2010 | REVISED - |

**STATE OF ILLINOIS**
**DEPARTMENT OF TRANSPORTATION**

**US 20 – WEST UNION ROAD TO IL 47**
**SUMMARY OF QUANTITIES**

SCALE: NTS | SHEET NO. 1 OF 1 SHEETS | STA. TO STA.

| F.A.U. RTE. | SECTION | COUNTY | TOTAL SHEETS | SHEET NO. |
|---|---|---|---|---|
| • | 2009-089 I | •• | 46 | 3 |
| •• McHENRY & KANE | | CONTRACT NO. 60J73 | | |
| • 525/ 345 | ILLINOIS | FED. AID PROJECT | | |

SCHEDULE OF QUANTITIES

| STATION | | SIGN PANEL ASSEMBLY REMOVAL (EACH) | SIGN ID # | SIZE (inches) | SIGN PANEL TYPE 1 (SQ.FT.) | TELESCOPING STEEL SIGN SUPPORT (FT.) | WOOD POST (FT.) | COMMENTS |
|---|---|---|---|---|---|---|---|---|
| 663+79 | LT | 1 | W14-3 | 36x48x48 | 5.5 | 26 | | |
| 630+43 | LT | 1 | W1-2 | 30x30 | 6.25 | | | |
| | | | W13-1 | 18x18 | 2.25 | | 15 | |
| 629+04 | LT | 1 | W1-10R | 30X30 | 9 | | | |
| | | | W16-8 | 30x8 | 1.67 | | 14.5 | |
| 579+32 | LT | 1 | W14-3 | 36x48x48 | 5.5 | 26 | | |
| 547+08 | LT | 1 | W1-2L | 30x30 | 6.25 | | | |
| | | | W13-1 | 18x18 | 2.25 | | 15 | |
| 543+29 | LT | 1 | W2-1 | 36X36 | 9 | | | |
| | | | W16-8 | 36X8 | 2 | | | |
| | | | R4-1 | 24x30 | 5 | | 15 | |
| 540+12 | LT | 1 | R3-8 | 30x30 | 6.25 | 12.5 | | |
| 535+90 | LT | 1 | R1-1 | 36X36 | 9 | | | |
| | | | W4-4 | 24x12 | 2 | | 14 | |
| 520+92 | LT | 1 | W14-3 | 36x48x48 | 5.5 | 26 | | |
| 474+46 | LT | 1 | W2-2 | 30x30 | 6.25 | | | |
| | | | W16-8 | 30x8 | 1.67 | | 14.5 | |
| 456+90 | LT | 1 | W2-2 | 30x30 | 6.25 | | | |
| | | | W16-8 | 30x8 | 1.67 | | 14.5 | |
| 455+23 | LT | 1 | W1-2 | 30x30 | 6.25 | 14.5 | | |
| 440+94 | LT | 1 | W11-10 | 30x30 | 6.25 | 14.5 | | |
| 438+23 | LT | 1 | W3-5 (45) | 36x36 | 9 | | -- | |
| 438+23 | LT | -- | W3-5 (45) | 36x36 | 9 | 14.5 | 14.2 | New sign to replace Speed Zone Ahead sign |
| 431+45 | LT | 1 | W2-2 | 30x30 | 6.25 | | | |
| | | | W16-8 | 42X8 | 2.33 | 28 | | |
| 429+38 | LT | 1 | R2-1 | 24x30 | 5 | | | |
| | | | R4-1 | 24x30 | 5 | 12.5 | | |
| 425+44 | LT | 1 | R3-2 | 24x24 | 4 | 12 | | |
| 424+00 | LT | 1 | R1-1 | 36x36 | 9 | 13 | | |
| 422+75 | LT | 1 | W6-1 | 36x36 | 9 | 14.5 | | |
| 416+26 | LT | 1 | W3-3 | 36x36 | 9 | 14.5 | | |
| 416+50 | LT | 1 | R1-1 | 30x30 | 6.25 | 13 | | |
| 405+66 | LT | 1 | R2-1 | 24x30 | 5 | 12.5 | | |
| 394+30 | LT | 1 | R1-1 | 36x36 | 9 | 15 | | |
| | | | W4-4 | 24x12 | 2 | | | |
| 391+51 | LT | 1 | W2-2 | 30x30 | 6.25 | | | |
| | | | W16-8 | 30x8 | 1.67 | 28 | | |
| 388+57 | LT | 1 | R2-1 | 24x30 | 5 | | | |
| | | | W14-3 | 36x48x48 | 5.5 | 13.5 | | |
| 384+47 | LT | 1 | OM-3R | 12x36 | 3 | 13 | | |
| 383+99 | LT | 1 | W1-7 | 48x24 | 8 | 24 | | |
| 383+85 | LT | 1 | OM-3L | 12x36 | 3 | 13 | | |
| 363+99 | LT | 1 | I-2 | 40x24 | 6.67 | | | |
| | | | R2-1 | 24x30 | 5 | 13.5 | | MOUNT 'HARMONY' ON POST |
| 355+49 | LT | 1 | W1-2 | 30x30 | 6.25 | 14.5 | | |
| 354+26 | LT | 1 | W2-1 | 30x30 | 6.25 | | 14.5 | |
| | | | W16-8 | 30x8 | 1.67 | | | |
| 348+75 | LT | 1 | R1-1 | 36X36 | 9 | | 15 | |
| 347+33 | LT | 1 | R2-1 | 24x30 | 5 | 14.5 | | |
| 338+79 | LT | 1 | R2-1 | 24x30 | 5 | 14.5 | | |
| 322+18 | LT | 1 | R3-2 | 24x24 | 4 | 4 | | |
| 314+56 | LT | 1 | W2-2 | 30x30 | 6.25 | 28 | | |
| | | | W16-8 | 30x8 | 1.67 | | | |
| 301+45 | LT | 1 | W2-1 | 30x30 | 6.25 | 28 | | |
| | | | W16-8 | 30x8 | 1.67 | | | |
| 293+60 | LT | 1 | R1-1 | 30x30 | 6.25 | 13 | | |
| 267+68 | LT | 1 | W1-2 | 30x30 | 6.25 | 14.5 | | |
| 230+90 | LT | 1 | W2-2 | 30x30 | 6.25 | 28 | | |
| | | | W16-8 | 30x8 | 1.67 | | | |
| 187+99 | LT | 1 | W2-2 | 30x30 | 6.25 | | | REUSE EXISTING POST |
| | | | W16-8 | 30x8 | 1.67 | 0 | | |

| STATION | | SIGN PANEL ASSEMBLY REMOVAL (EACH) | SIGN ID # | SIZE (inches) | SIGN PANEL TYPE 1 (SQ.FT.) | TELESCOPING STEEL SIGN SUPPORT (FT.) | WOOD POST (FT.) | COMMENTS |
|---|---|---|---|---|---|---|---|---|
| 177+90 | LT | 1 | R1-1 | 30x30 | 6.25 | 30 | | |
| | | | W4-4p | 24x12 | 2 | | | |
| 177+15 | LT | 1 | W2-1 | 30x30 | 6.25 | | | REUSE EXISTING POST |
| | | | W16-8a | 48x16 | 5.33 | 0 | | |
| 173+40 | LT | 1 | R1-1 | 30x30 | 6.25 | 30 | | |
| | | | W4-4p | 24x12 | 2 | | | |
| 169+39 | LT | 1 | W14-3 | 36x48x48 | 5.5 | 26 | | |
| 135+61 | LT | 1 | W3-5 (45) | 36x36 | 9 | 14.5 | | |
| | | | W13-1 | 18x18 | 2.25 | | | |
| 129+15 | LT | 1 | I-2 | 40x24 | 6.67 | | | |
| | | | R2-1 | 24x30 | 5 | 13.5 | | MOUNT 'CORAL' ON POST |
| 118+36 | LT | 1 | W2-1 | 30x30 | 6.25 | | | REUSE EXISTING POST |
| | | | W16-8 | 30x8 | 1.67 | 0 | | |
| 112+60 | LT | 1 | R1-1 | 30x30 | 6.25 | 30 | | |
| | | | W4-4p | 24x12 | 2 | | | |
| 110+13 | LT | 1 | R2-1 | 24x30 | 5 | 13.5 | | |
| 105+40 | LT | 1 | W1-2 | 30x30 | 6.25 | 14.5 | | |
| 099+01 | LT | 1 | R2-1 | 24x30 | 5 | 13.5 | | |
| 095+84 | LT | 1 | R12-4 | 36x24 | 6 | 15 | | |
| 093+61 | LT | 1 | W1-2 | 30x30 | 6.25 | 14.5 | | |
| 057+80 | LT | 1 | W2-2 | 30x30 | 6.25 | 30 | | |
| | | | W16-8 | 30x8 | 1.67 | | | |
| 049+90 | LT | 1 | R1-1 | 30x30 | 6.25 | 28 | | |
| 079+93 | RT | 1 | W1-2 | 30x30 | 6.25 | 14.5 | | |
| 090+40 | RT | 1 | W1-2 | 30x30 | 6.25 | 14.5 | | |
| 092+49 | RT | 1 | R12-4 | 36x24 | 6 | 15 | | |
| 107+06 | RT | 1 | W2-1 | 30x30 | 6.25 | | | REUSE EXISTING POST |
| | | | W16-8 | 30x8 | 1.67 | 0 | | |
| 113+40 | RT | 1 | R1-1 | 30x30 | 6.25 | | 15 | |
| | | | W4-4p | 24x12 | 2 | | | |
| 113+54 | RT | 1 | R2-1 | 24x30 | 5 | | | |
| | | | W14-3 | 36x48x48 | 5.5 | 26 | | |
| 128+98 | RT | 1 | R2-1 | 24x30 | 5 | 13.5 | | |
| 140+40 | RT | 1 | W14-3 | 36x48x48 | 5.5 | 26 | | |
| 166+23 | RT | 1 | W2-1 | 30x30 | 6.25 | | | REUSE EXISTING POST |
| | | | W16-8a | 30x16 | 3.33 | 0 | | |
| 173+64 | RT | 1 | R1-1 | 30x30 | 6.25 | | | REUSE EXISTING POST |
| | | | W4-4p | 24x12 | 2 | 0 | | |
| 175+01 | RT | 1 | W2-3 | 30x30 | 6.25 | 30 | | |
| | | | W16-8 | 30x8 | 1.67 | | | |
| 178+79 | RT | 1 | W1-7 | 48x24 | 8 | 26 | | |
| 218+14 | RT | 1 | W2-2 | 30x30 | 6.25 | 30 | | |
| | | | W16-8 | 30x8 | 1.67 | | | |
| 221+70 | RT | 1 | R3-5 | 30x36 | 7.5 | 14 | | |
| 232+91 | RT | 1 | W1-2 | 30x30 | 6.25 | 14.5 | | |
| 251+16 | RT | 1 | W1-2 | 30x30 | 6.25 | 14.5 | | |
| 270+59 | RT | 1 | W14-3 | 36x48x48 | 5.5 | 26 | | |
| 287+06 | RT | 1 | W2-1 | 30x30 | 6.25 | 30 | | |
| | | | W16-8 | 30x8 | 1.67 | | | |
| 294+10 | RT | 1 | R1-1 | 30x30 | 6.25 | 28 | | |
| 298+93 | RT | 1 | W2-2 | 30x30 | 6.25 | 30 | | |
| | | | W16-8 | 30x8 | 1.67 | | | |
| 305+59 | RT | 1 | R3-5 | 30x36 | 7.5 | 14 | | |
| 308+60 | RT | 1 | R1-1 | 30x30 | 6.25 | 28 | | |
| 308+68 | RT | 1 | W1-8L | 12x18 | 1.5 | 12.5 | | |
| 308+99 | RT | 1 | W1-8L | 12x18 | 1.5 | 12.5 | | |
| 309+35 | RT | 1 | W1-8L | 12x18 | 1.5 | 12.5 | | |
| 320+15 | RT | 1 | W11-10 | 30x30 | 6.25 | 14.5 | | |
| 321+59 | RT | 1 | R3-2 | 24x24 | 4 | 13 | | |
| 332+59 | RT | 1 | W3-5 (45) | 36x36 | 9 | 14.5 | | |
| 338+77 | RT | 1 | I-2 | 40x24 | 6.67 | | | MOUNT 'HARMONY' ON POST |
| | | | R2-1 | 24x30 | 5 | 13.5 | | |

h:\jobs2009\20093023-15\CAD\Site\dgn\00\D160137-sht-Schedule01.dgn
2/11/2010 4:45:55 PM

| | | | |
|---|---|---|---|
| FILE NAME = $FILEL$ | USER NAME = _USER_ | DESIGNED - EF | REVISED - |
| | | DRAWN - EF | REVISED - |
| | PLOT SCALE = 50.0000 ' / IN. | CHECKED - RS | REVISED - |
| | PLOT DATE = 2/11/2010 | DATE - 02-08-2010 | REVISED - |

**STATE OF ILLINOIS**
**DEPARTMENT OF TRANSPORTATION**

**US 20 – WEST UNION ROAD TO IL 47**
**SCHEDULE OF QUANTITIES – SIGNS AND TRAFFIC SIGNALS**

SCALE: NTS | SHEET NO. 1 OF 2 SHEETS | STA. TO STA.

| F.A.U. RTE. | SECTION | COUNTY | TOTAL SHEETS | SHEET NO. |
|---|---|---|---|---|
| • | 2009-089 I | •• | 46 | 4 |
| •• McHENRY & KANE | | CONTRACT NO. 60J73 | | |
| • 525/ 345 | ILLINOIS FED. AID PROJECT | | | |

SCHEDULE OF QUANTITIES

| STATION | | SIGN PANEL ASSEMBLY REMOVAL (EACH) | SIGN ID # | SIZE (inches) | SIGN PANEL TYPE 1 (SQ.FT.) | TELESCOPING STEEL SIGN SUPPORT (FT.) | WOOD POST (FT.) | COMMENTS |
|---|---|---|---|---|---|---|---|---|
| 340+77 | RT | 1 | W1-2 | 30x30 | 6.25 | 14.5 | | |
| 343+88 | RT | 1 | W2-1 | 30x30 | 6.25 | | 17 | |
| | | | W16-8 | 30x8 | 1.67 | | | |
| 345+79 | RT | 1 | W1-8L | 12x18 | 1.5 | 12.5 | | |
| | | | W1-8R | 12x18 | 1.5 | 12.5 | | |
| 346+80 | RT | 1 | W1-8L | 12x18 | 1.5 | 12.5 | | |
| | | | W1-8R | 12x18 | 1.5 | 12.5 | | |
| 347+99 | RT | 1 | W1-8L | 12x18 | 1.5 | 12.5 | | |
| | | | W1-8R | 12x18 | 1.5 | 12.5 | | |
| 349+50 | RT | 1 | R1-1 | 36x36 | 9 | 14 | | |
| 349+58 | RT | 1 | W1-8L | 12x18 | 1.5 | 12.5 | | |
| | | | W1-8R | 12x18 | 1.5 | 12.5 | | |
| 350+55 | RT | 1 | W1-8L | 12x18 | 1.5 | 12.5 | | |
| | | | W1-8R | 12x18 | 1.5 | 12.5 | | |
| 351+58 | RT | 1 | W1-8L | 12x18 | 1.5 | 12.5 | | |
| | | | W1-8R | 12x18 | 1.5 | 12.5 | | |
| 352+64 | RT | 1 | R2-1 | 24x30 | 5 | 12.5 | | |
| 353+32 | RT | 1 | W11 | 30x30 | 6.25 | 14.5 | | |
| 364+30 | RT | 1 | R2-1 | 24x30 | 5 | 13.5 | | |
| 374+06 | RT | 1 | W14-3 | 36x48x48 | 5.5 | 26 | | |
| 377+29 | RT | 1 | W2-2 | 30x30 | 6.25 | 28 | | |
| | | | W16-8 | 30x8 | 1.67 | | | |
| 384+30 | RT | 1 | R1-1 | 30x30 | 6.25 | 28 | | |
| 384+20 | RT | 1 | OM-3R | 12x36 | 3 | 13.5 | | |
| 384+47 | RT | 1 | OM-3R | 12x36 | 3 | 13.5 | | |
| 386+86 | RT | 1 | R2-1 | 24x30 | 5 | 12.5 | | |
| 390+65 | RT | 1 | W6-1 | 36x36 | 9 | 15.5 | | |
| 403+16 | RT | 1 | W11-10 | 30x30 | 6.25 | 15 | | |
| 409+28 | RT | 1 | W4-3 | 36x36 | 9 | 15.5 | | |
| 413+23 | RT | 1 | W6-2 | 36x36 | 9 | 15.5 | | |
| 414+81 | RT | 1 | R2-1 | 24x30 | 5 | 13.5 | | |
| 417+53 | RT | 1 | W2-3 | 30x30 | 6.25 | 30 | | |
| | | | W16-8 | 30x8 | 1.67 | | | |
| 422+77 | RT | 1 | R8 | 18x24 | 3 | | | |
| | | | W4-2R | 30x30 | 6.25 | 15 | | |

| STATION | | SIGN PANEL ASSEMBLY REMOVAL (EACH) | SIGN ID # | SIZE (inches) | SIGN PANEL TYPE 1 (SQ.FT.) | TELESCOPING STEEL SIGN SUPPORT (FT.) | WOOD POST (FT.) | COMMENTS |
|---|---|---|---|---|---|---|---|---|
| 424+11 | RT | 1 | R3-2 | 24x24 | 4 | | | |
| | | | R3-2 | 24x24 | 4 | 13 | | |
| 424+32 | RT | 1 | W1-7 | 48x24 | 8 | 26 | | |
| 426+19 | RT | 1 | W1-8L | 12x18 | 1.5 | 12.5 | | REMOVE SIGNS ON RIGHT |
| 427+15 | RT | 1 | W1-8L | 12x18 | 1.5 | 12.5 | | INSTALL SIGNS ON LEFT |
| 428+10 | RT | 1 | W1-8L | 12x18 | 1.5 | 12.5 | | |
| 429+71 | RT | 1 | R2-1 | 24x30 | 5 | 13.5 | | |
| 433+54 | RT | 1 | W1-2 | 30x30 | 6.25 | 14.5 | | |
| 443+03 | RT | 1 | W2-3 | 30x30 | 6.25 | 26 | | |
| | | | W16-8 | 30x8 | 1.67 | | | |
| 447+50 | RT | 1 | R1-1 | 36X36 | 9 | 28 | | |
| 456+86 | RT | 1 | W2-3 | 30x30 | 6.25 | 26 | | |
| | | | W16-8 | 30x8 | 1.67 | | | |
| 465+50 | RT | 1 | R1-1 | 36X36 | 9 | 28 | | |
| 519+61 | RT | 1 | S4-I105 | 24x24 | 4 | | | |
| | | | W14-3 | 36x48x48 | 5.5 | 26 | | |
| 522+43 | RT | 1 | W1-2 | 30x30 | 6.25 | 16 | | |
| | | | W13-1 | 18x18 | 2.25 | | | |
| 525+97 | RT | 1 | W2-1 | 30x30 | 6.25 | 26 | | |
| | | | W16-8 | 30x8 | 1.67 | | | |
| 532+25 | RT | 1 | R3-8 | 30x30 | 6.25 | 13 | | |
| 536+75 | RT | 1 | R1-1 | 30x30 | 6.25 | 32 | | |
| | | | W4-4p | 24x12 | 2 | | | |
| 570+85 | RT | 1 | W14-3 | 36x48x48 | 5.5 | 26 | | |
| 611+63 | RT | 1 | W1-2 | 30x30 | 6.25 | 16.5 | | |
| | | | W13-1 | 18x18 | 2.25 | | | |
| 615+84 | RT | 1 | W1-10R | 30x30 | 6.25 | 26 | | |
| | | | W16-8 | 30x8 | 1.67 | | | |
| 619+00 | RT | 1 | R1-1 | 36X36 | 9 | 26 | | |
| 620+00 | RT | 1 | R1-1 | 36X36 | 9 | 26 | | |
| 637+64 | RT | 1 | W14-3 | 36x48x48 | 5.5 | 26 | | |
| 666+87 | RT | 1 | W1-2 | 30x30 | 6.25 | 14.5 | | |
| 687+05 | RT | 1 | W3-3 | 30x30 | 6.25 | 14.5 | | |

| PAY ITEM NUMBER | DESCRIPTION | | TOTAL QUANTITY | McHENRY COUNTY QUANTITY | CORAL ROAD QUANTITY | MARENGO/BECK/ S. UNION ROADS QUANTITY | HARMONY ROAD QUANTITY | KANE COUNTY QUANTITY | I-90 RAMPS QUANTITY | ALLEN/BRIER HILL ROADS QUANTITY |
|---|---|---|---|---|---|---|---|---|---|---|
| 85000300 | MAINTENANCE OF EXISTING TRAFFIC SIGNAL INSTALLATION | L SUM | 1 | 0 | | | | 1 | 1 | |
| 88030012 | SIGNAL HEAD, LED, 1-FACE, 1-SECTION, BRACKET MOUNTED | EACH | 2 | 0 | | | | 2 | 2 | |
| 88030020 | SIGNAL HEAD, LED, 1-FACE, 3-SECTION, MAST-ARM MOUNTED | EACH | 4 | 0 | | | | 4 | 4 | |
| 88030070 | SIGNAL HEAD, LED, 1-FACE, 4-SECTION, BRACKET MOUNTED | EACH | 2 | 0 | | | | 2 | 2 | |
| 88030080 | SIGNAL HEAD, LED, 1-FACE, 4-SECTION, MAST ARM MOUNTED | EACH | 2 | 0 | | | | 2 | 2 | |
| 88030100 | SIGNAL HEAD, LED, 1-FACE, 5-SECTION, BRACKET MOUNTED | EACH | 2 | 0 | | | | 2 | 2 | |
| 88030110 | SIGNAL HEAD, LED, 1-FACE, 5-SECTION, MAST-ARM MOUNTED | EACH | 2 | 0 | | | | 2 | 2 | |
| 88200210 | TRAFFIC SIGNAL BACKPLATE, LOUVERED, ALUMINUM | EACH | 8 | 0 | | | | 8 | 8 | |
| 89502375 | REMOVE EXISTING TRAFFIC SIGNAL EQUIPMENT | EACH | 1 | 0 | | | | 1 | 1 | |
| X8803080 | SIGNAL HEAD, LED, 1-FACE, 1-SECTION, BRACKET MOUNTED, RETROFIT | EACH | 7 | 7 | 2 | 5 | | 0 | | |
| XX003183 | POST MOUNTED FLASHING BEACON INSTALLATION to FLASHING BEACON, POST MOUNTED, SOLAR POWERED INSTALLATION | EACH | 10 | 6 | 2 | | 4 | 4 | | 4 |

h:\jobs2009\20093023-15\CAD\Site\dgn\00\0l6037-sht-Schedule02.dgn
2/11/2010 4:15:01 PM

FILE NAME = $FILEL$

USER NAME = _USER_
PLOT SCALE = 50.0000 ' / IN.
PLOT DATE = 2/11/2010

DESIGNED - EF
DRAWN - EF
CHECKED - RS
DATE - 02-08-2010

REVISED -
REVISED -
REVISED -
REVISED -

**STATE OF ILLINOIS**
**DEPARTMENT OF TRANSPORTATION**

**US 20 – WEST UNION ROAD TO IL 47**
**SCHEDULE OF QUANTITIES – SIGNS AND TRAFFIC SIGNALS**

SCALE: NTS | SHEET NO. 2 OF 2 SHEETS | STA. | TO STA.

| F.A.U. RTE. | SECTION | COUNTY | TOTAL SHEETS | SHEET NO. |
|---|---|---|---|---|
| • | 2009-089 I | •• | 46 | 5 |
| •• McHENRY & KANE | | CONTRACT NO. 60J73 | | |
| • 525/ 345 | ILLINOIS FED. AID PROJECT | | | |

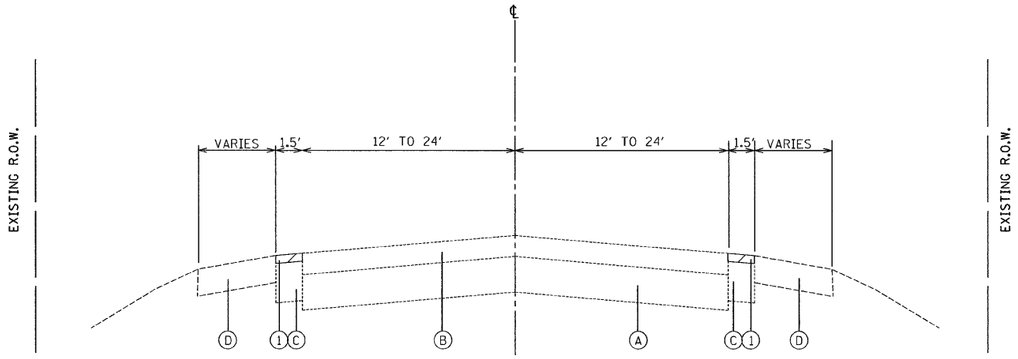


## EXISTING NORMAL CROWN TYPICAL SECTION

| | | |
|---|---|---|
| STA. 66+37 TO STA. 85+72 | STA. 313+18 TO STA. 322+62 | STA. 539+52 TO STA. 546+83 |
| STA. 89+64 TO STA. 97+30 | STA. 328+84 TO STA. 346+11 | STA. 554+34 TO STA. 606+53 |
| STA. 101+84 TO STA. 110+18 | STA. 350+10 TO STA. 389+90 | STA. 607+78 TO STA. 617+77 |
| STA. 115+96 TO STA. 126+81 | STA. 450+92 TO STA. 457+99 | STA. 622+92 TO STA. 628+11 |
| STA. 131+57 TO STA. 231+65 | STA. 468+51 TO STA. 480+24 | STA. 633+32 TO STA. 637+11 |
| STA. 323+83 TO STA. 237+09 | STA. 486+77 TO STA. 493+15 | STA. 641+01 TO STA. 655+08 |
| STA. 241+92 TO STA. 255+43 | STA. 504+59 TO STA. 508+39 | STA. 666+35 TO STA. 670+22 |
| STA. 261+74 TO STA. 290+49 | STA. 512+26 TO STA. 528+31 | STA. 683+10 TO STA. 701+35 |
| STA. 297+06 TO STA. 304+93 | | |

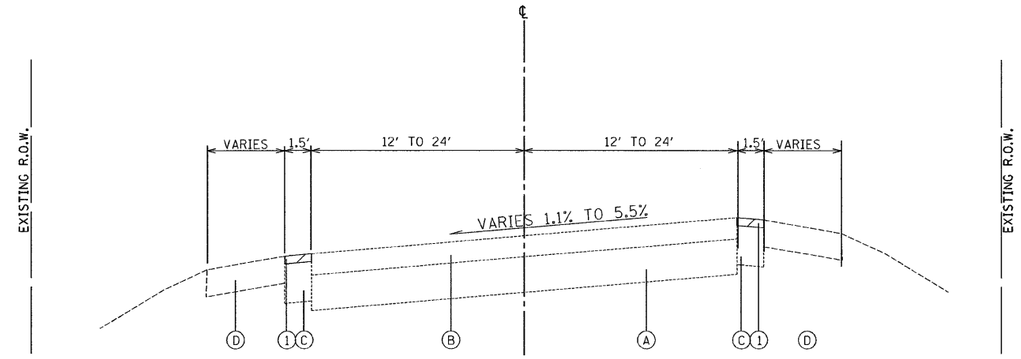


## EXISTING SUPERELEVATED TYPICAL SECTION

| | | |
|---|---|---|
| STA. 50+00 TO STA. 66+37 | STA. 304+93 TO STA. 313+18 | STA. 528+31 TO STA. 539+52 |
| STA. 85+72 TO STA. 89+64 | STA. 322+62 TO STA. 328+84 | STA. 546+83 TO STA. 554+34 |
| STA. 97+30 TO STA. 101+84 | STA. 346+11 TO STA. 350+10 | STA. 606+53 TO STA. 607+78 |
| STA. 110+18 TO STA. 115+96 | STA. 427+92 TO STA. 433+53 | STA. 617+77 TO STA. 622+92 |
| STA. 126+81 TO STA. 131+57 | STA. 436+97 TO STA. 450+92 | STA. 628+11 TO STA. 633+32 |
| STA. 231+65 TO STA. 323+83 | STA. 457+99 TO STA. 468+51 | STA. 637+11 TO STA. 641+01 |
| STA. 237+09 TO STA. 241+92 | STA. 480+24 TO STA. 486+77 | STA. 655+08 TO STA. 666+35 |
| STA. 255+43 TO STA. 261+74 | STA. 493+15 TO STA. 504+59 | STA. 670+22 TO STA. 683+10 |
| STA. 290+49 TO STA. 297+06 | STA. 508+39 TO STA. 512+26 | |

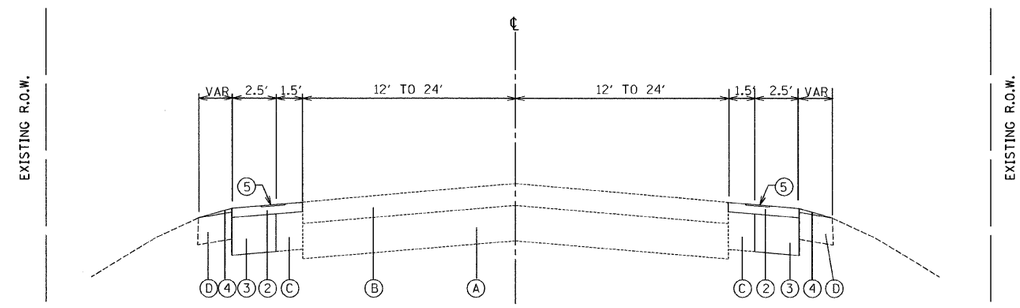


## PROPOSED NORMAL CROWN TYPICAL SECTION

| | | |
|---|---|---|
| STA. 66+37 TO STA. 85+72 | STA. 313+18 TO STA. 322+62 | STA. 539+52 TO STA. 546+83 |
| STA. 89+64 TO STA. 97+30 | STA. 328+84 TO STA. 346+11 | STA. 554+34 TO STA. 606+53 |
| STA. 101+84 TO STA. 110+18 | STA. 350+10 TO STA. 389+90 | STA. 607+78 TO STA. 617+77 |
| STA. 115+96 TO STA. 126+81 | STA. 450+92 TO STA. 457+99 | STA. 622+92 TO STA. 628+11 |
| STA. 131+57 TO STA. 231+65 | STA. 468+51 TO STA. 480+24 | STA. 633+32 TO STA. 637+11 |
| STA. 323+83 TO STA. 237+09 | STA. 486+77 TO STA. 493+15 | STA. 641+01 TO STA. 655+08 |
| STA. 241+92 TO STA. 255+43 | STA. 504+59 TO STA. 508+39 | STA. 666+35 TO STA. 670+22 |
| STA. 261+74 TO STA. 290+49 | STA. 512+26 TO STA. 528+31 | STA. 683+10 TO STA. 701+35 |
| STA. 297+06 TO STA. 304+93 | | |

## EXISTING CONDITIONS:

- (A) PCC PAVEMENT
- (B) HOT-MIX ASPHALT SURFACE
- (C) HOT-MIX ASPHALT SHOULDERS
- (D) AGGREGATE SHOULDERS

ITEMS TO BE REMOVED

## PROPOSED IMPROVEMENTS:

1. HOT-MIX ASPHALT SURFACE REMOVAL, 2"
2. HOT-MIX ASPHALT SURFACE COURSE, MIX "D" N70, 2"
3. HOT-MIX ASPHALT SHOULDERS, 6" (IN 2 LIFTS)
4. AGGREGATE WEDGE SHOULDER, TYPE B
5. SHOULDER RUMBLE STRIPS

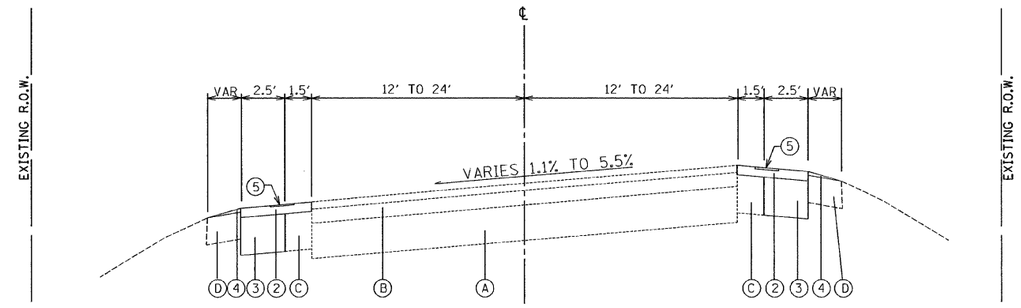


## PROPOSED SUPERELEVATED TYPICAL SECTION

| | | |
|---|---|---|
| STA. 50+00 TO STA. 66+37 | STA. 304+93 TO STA. 313+18 | STA. 528+31 TO STA. 539+52 |
| STA. 85+72 TO STA. 89+64 | STA. 322+62 TO STA. 328+84 | STA. 546+83 TO STA. 554+34 |
| STA. 97+30 TO STA. 101+84 | STA. 346+11 TO STA. 350+10 | STA. 606+53 TO STA. 607+78 |
| STA. 110+18 TO STA. 115+96 | STA. 427+92 TO STA. 433+53 | STA. 617+77 TO STA. 622+92 |
| STA. 126+81 TO STA. 131+57 | STA. 436+97 TO STA. 450+92 | STA. 628+11 TO STA. 633+32 |
| STA. 231+65 TO STA. 323+83 | STA. 457+99 TO STA. 468+51 | STA. 637+11 TO STA. 641+01 |
| STA. 237+09 TO STA. 241+92 | STA. 480+24 TO STA. 486+77 | STA. 655+08 TO STA. 666+35 |
| STA. 255+43 TO STA. 261+74 | STA. 493+15 TO STA. 504+59 | STA. 670+22 TO STA. 683+10 |
| STA. 290+49 TO STA. 297+06 | STA. 508+39 TO STA. 512+26 | |

h:\jobs2009\20093023-15\CAD\Site\dgn\00\D160137-TypSec01.dgn
2/11/2010 4:15:07 PM

| | | | |
|---|---|---|---|
| FILE NAME = $FILEL$ | USER NAME = _USER_ | DESIGNED - RS | REVISED - |
| | | DRAWN - RS | REVISED - |
| | PLOT SCALE = 4.0000 ' / IN. | CHECKED - RS | REVISED - |
| | PLOT DATE = 2/11/2010 | DATE - 02-08-2010 | REVISED - |

**STATE OF ILLINOIS**
**DEPARTMENT OF TRANSPORTATION**

**US 20 – WEST UNION ROAD TO IL 47**
**TYPICAL SECTIONS**

SCALE: NTS | SHEET NO. 1 OF 3 SHEETS | STA. TO STA.

| F.A.U. RTE. | SECTION | COUNTY | TOTAL SHEETS | SHEET NO. |
|---|---|---|---|---|
| * | 2009-089 I | ** | 46 | 6 |
| ** McHENRY & KANE | | CONTRACT NO. 60J73 | | |
| * 525/ 345 | ILLINOIS FED. AID PROJECT | | | |

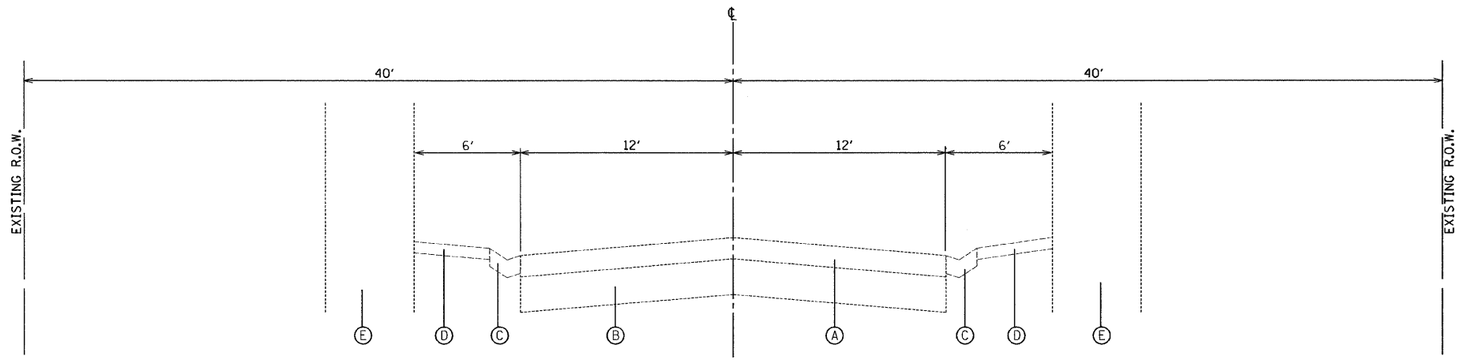


EXISTING TYPICAL SECTION
STA. 433+53 TO STA. 436+97

EXISTING CONDITIONS:

- (A) HOT-MIX ASPHALT SURFACE
- (B) P.C. CONCRETE PAVEMENT
- (C) AGGREGATE SHOULDER
- (D) TYPE B GUTTER
- (E) BRIDGE PIER

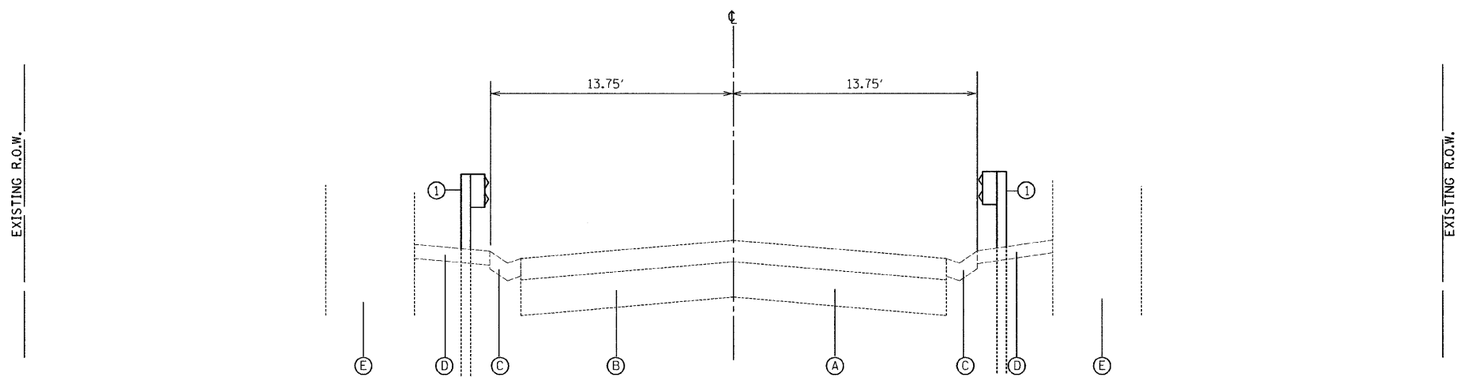


EXISTING TYPICAL SECTION
STA. 433+53 TO STA. 436+97

PROPOSED IMPROVEMENTS

- (1) GUARDRAIL, TYPE B

h:\Jobs2009\2093023-I5\CAD\Site\dgn\00\D60J37-TypSec02.dgn
2/11/2010 4:15:10 PM

| | | | | | | | | | | |
|---|---|---|---|---|---|---|---|---|---|---|
| FILE NAME = $FILEL$ | USER NAME = _USER_ | DESIGNED - RS | REVISED - | STATE OF ILLINOIS DEPARTMENT OF TRANSPORTATION | US 20 – WEST UNION ROAD TO IL 47 TYPICAL SECTIONS | F.A.U. RTE. | SECTION | COUNTY | TOTAL SHEETS | SHEET NO. |
| | | DRAWN - RS | REVISED - | | | • | 2009-089 I | •• | 46 | 7 |
| | PLOT SCALE = 4.0000 ' / IN. | CHECKED - RS | REVISED - | | | •• McHENRY & KANE | | CONTRACT NO. 60J73 | | |
| | PLOT DATE = 2/11/2010 | DATE - 02-08-2010 | REVISED - | | SCALE: NTS / SHEET NO. 2 OF 3 SHEETS / STA. / TO STA. | • 525/ 345 | ILLINOIS | FED. AID PROJECT | | |

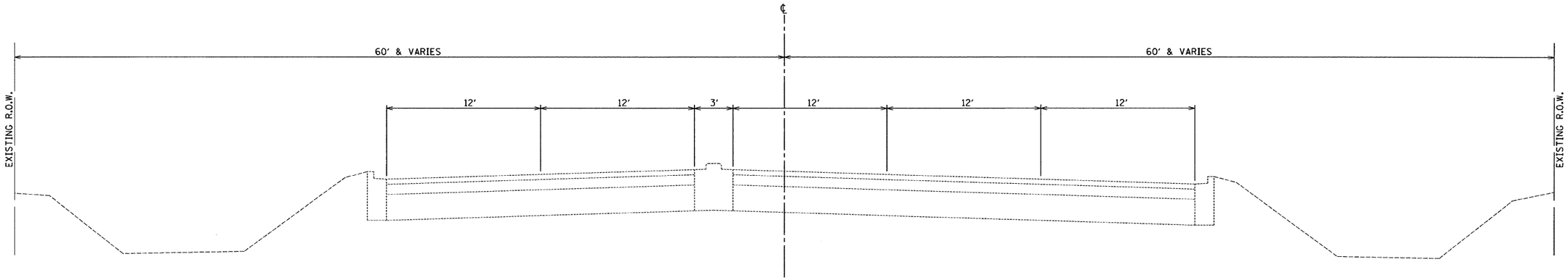


EXISTING TYPICAL SECTION
STA. 389+90 TO STA. 427+92

h:\jobs2009\20093023-I5\CAD\Site\dgn\00\0160137-TypSec03.dgn
2/11/2010 4:15:13 PM

| | | | | | | | | | | |
|---|---|---|---|---|---|---|---|---|---|---|
| FILE NAME = $FILEL$ | USER NAME = _USER_ | DESIGNED - RS | REVISED - | STATE OF ILLINOIS DEPARTMENT OF TRANSPORTATION | US 20 – WEST UNION ROAD TO IL 47 TYPICAL SECTIONS | F.A.U. RTE. | SECTION | COUNTY | TOTAL SHEETS | SHEET NO. |
| | | DRAWN - RS | REVISED - | | | • | 2009-089 I | •• | 46 | 8 |
| | PLOT SCALE = 4.0000 ' / IN. | CHECKED - RS | REVISED - | | | •• McHENRY & KANE | | CONTRACT NO. 60J73 | | |
| | PLOT DATE = 2/11/2010 | DATE - 02-08-2010 | REVISED - | | SCALE: NTS / SHEET NO. 3 OF 3 SHEETS / STA. TO STA. | • 525/ 345 | ILLINOIS | FED. AID PROJECT | | |

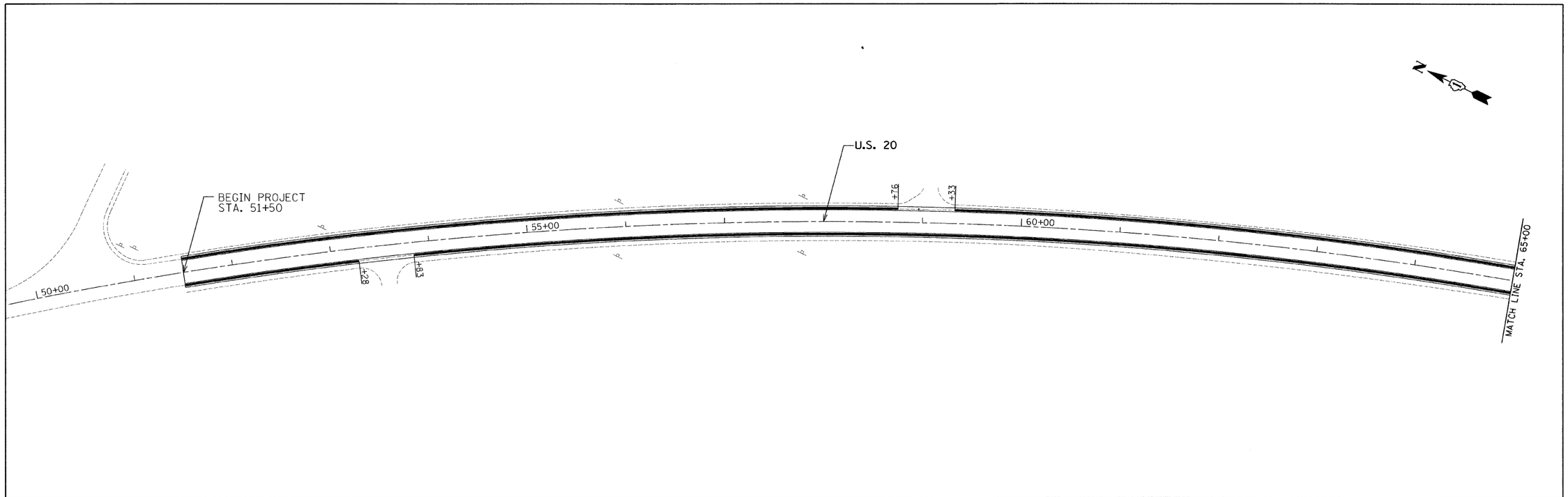


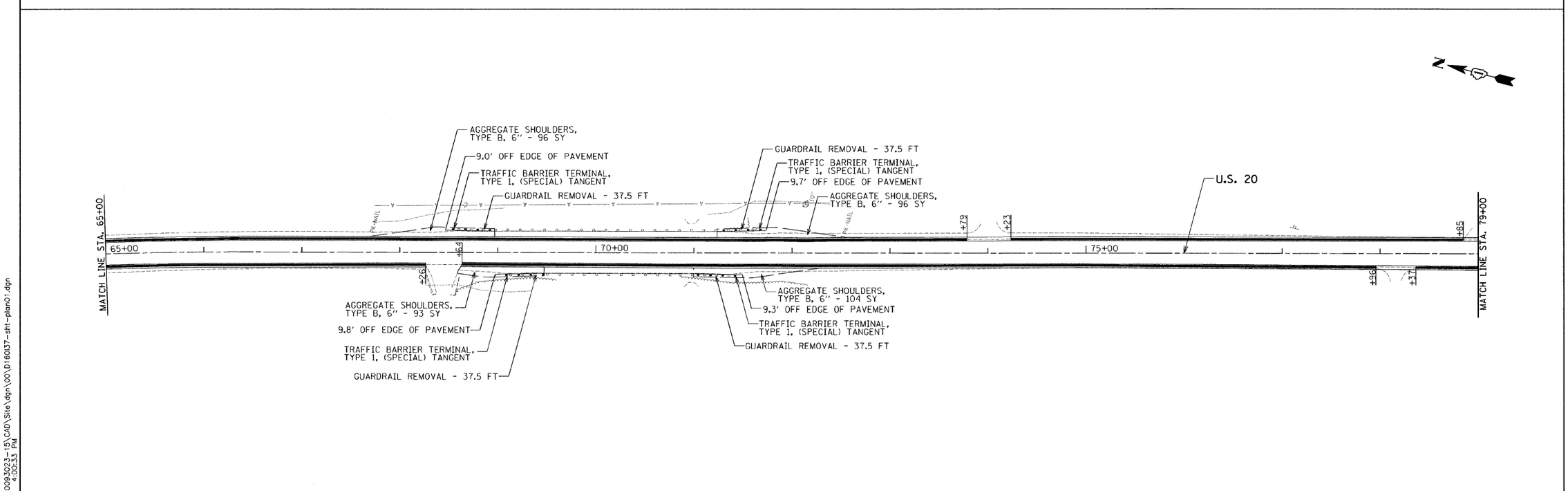


H:\Jobs2009\20093023-15\CAD\Site\dgn\00\D160137-sht-plan01.dgn
2/11/2010 4:00:33 PM

| | | | |
|---|---|---|---|
| FILE NAME = $FILEL$ | USER NAME = _USER_ | DESIGNED - RS / EF | REVISED - |
| | | DRAWN - JJ / EF | REVISED - |
| | PLOT SCALE = 50.0000 ' / IN. | CHECKED - RS | REVISED - |
| | PLOT DATE = 2/11/2010 | DATE - 02-08-2010 | REVISED - |

**STATE OF ILLINOIS**
**DEPARTMENT OF TRANSPORTATION**

**US 20 – WEST UNION ROAD TO IL 47**
**ROADWAY PLANS**

SCALE: 50 | SHEET NO. 1 OF 23 SHEETS | STA. 50+00 TO STA. 79+00

| F.A.U. RTE. | SECTION | COUNTY | TOTAL SHEETS | SHEET NO. |
|---|---|---|---|---|
| • | 2009-089 I | •• | 46 | 9 |
| •• McHENRY & KANE | | CONTRACT NO. 60J73 | | |
| • 525/345 | ILLINOIS | FED. AID PROJECT | | |

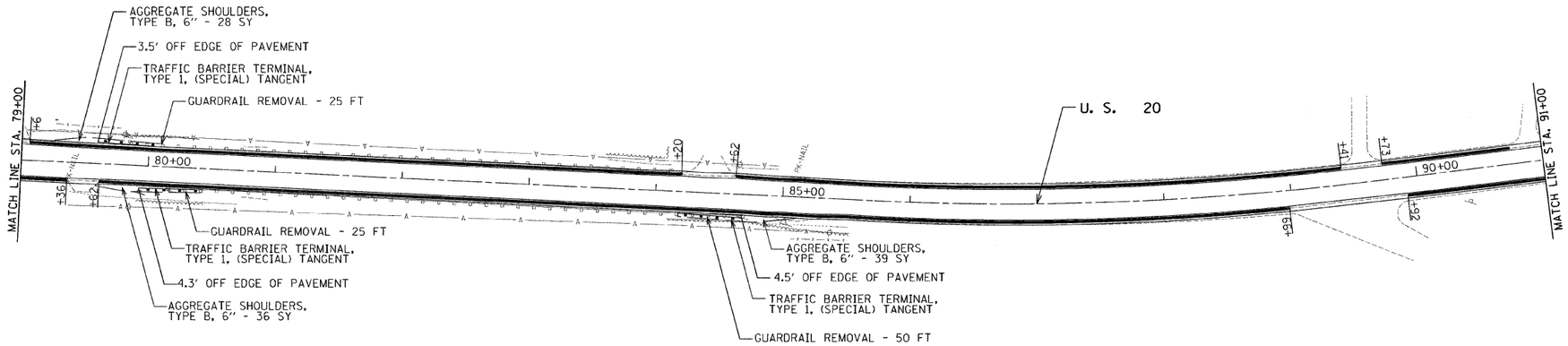


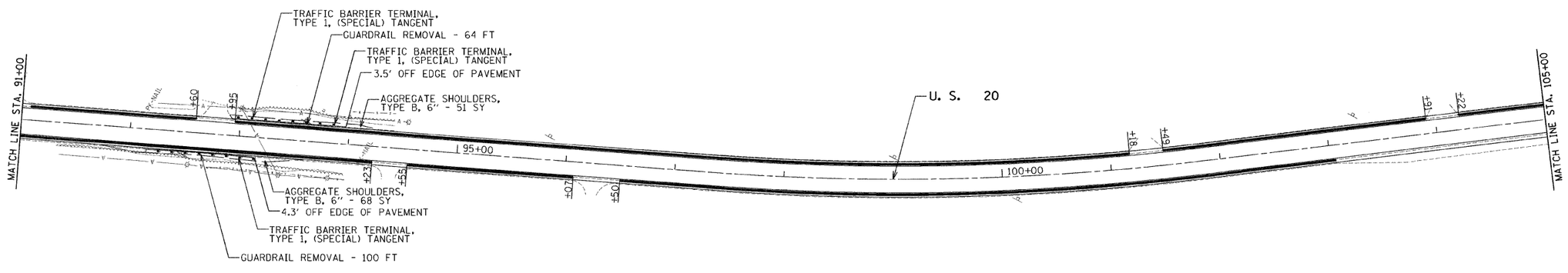


h:\jobs2009\20093023-15\cad\site\dgn\00\D160137-sht-plan02.dgn
2/11/2010 4:00:40 PM

| | | | | | | | | | | |
|---|---|---|---|---|---|---|---|---|---|---|
| FILE NAME = $FILEL$ | USER NAME = _USER_ | DESIGNED - RS / EF | REVISED - | STATE OF ILLINOIS DEPARTMENT OF TRANSPORTATION | US 20 – WEST UNION ROAD TO IL 47 ROADWAY PLANS | F.A.U. RTE. | SECTION | COUNTY | TOTAL SHEETS | SHEET NO. |
| | | DRAWN - JJ / EF | REVISED - | | | * | 2009-089 I | ** | 46 | 10 |
| | PLOT SCALE = 50.0000 ' / IN. | CHECKED - RS | REVISED - | | | ** McHENRY & KANE | | CONTRACT NO. 60J73 | | |
| | PLOT DATE = 2/11/2010 | DATE - 02-08-2010 | REVISED - | | SCALE: 50 / SHEET NO. 2 OF 23 SHEETS / STA. 79+00 TO STA. 105+00 | * 525/345 | ILLINOIS | FED. AID PROJECT | | |

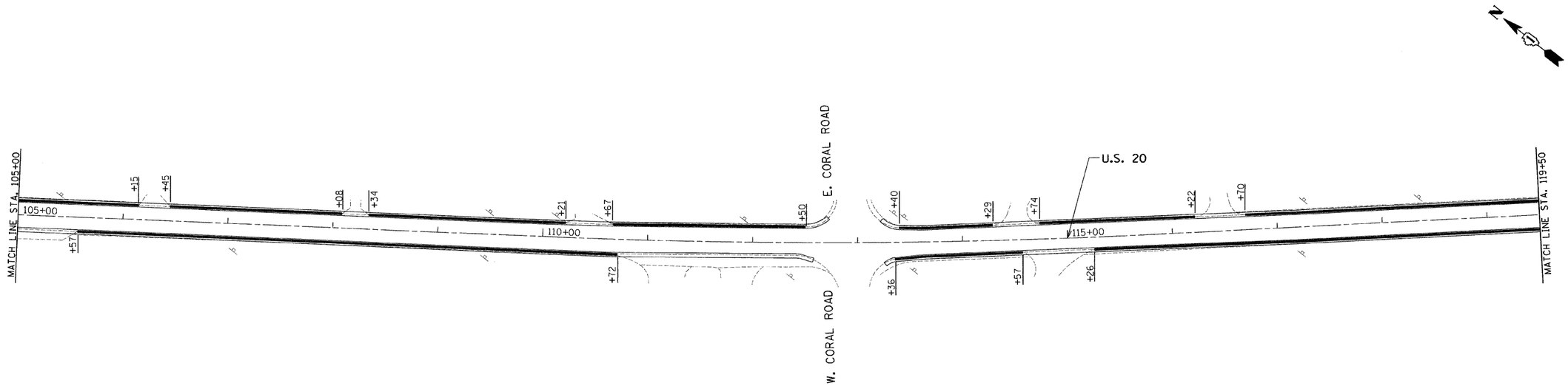


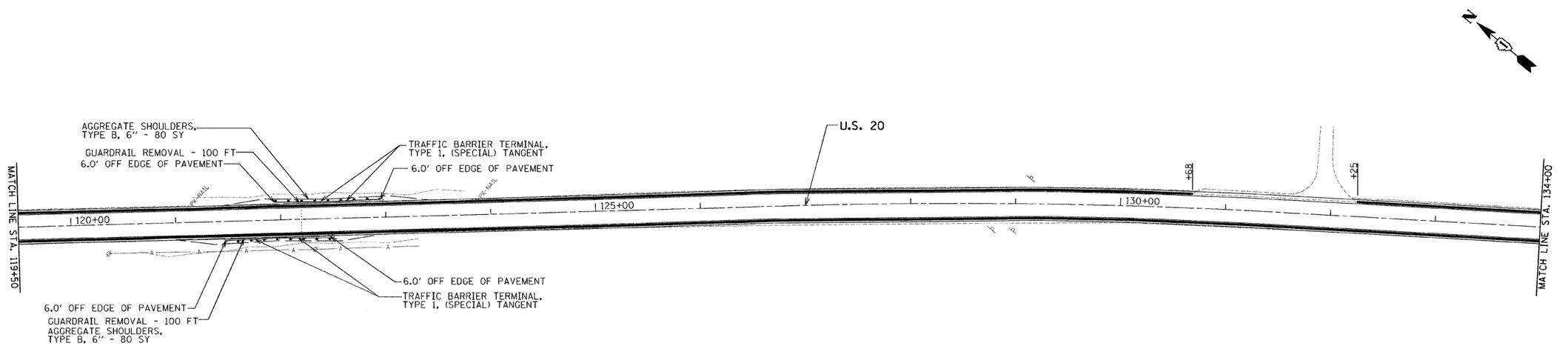


h:\jobs2009\20093023-15\cad\site\dgn\00\D160137-sht-plan03.dgn
2/11/2010 4:00:46 PM

| | | | | | | | | | |
|---|---|---|---|---|---|---|---|---|---|
| FILE NAME = $FILEL$ | USER NAME = _USER_ | DESIGNED - RS / EF | REVISED - | STATE OF ILLINOIS DEPARTMENT OF TRANSPORTATION | US 20 – WEST UNION ROAD TO IL 47 ROADWAY PLANS | F.A.U. RTE. | SECTION | COUNTY | TOTAL SHEETS / SHEET NO. |
| | | DRAWN - JJ / EF | REVISED - | | | • | 2009-089 I | •• | 46 / 11 |
| | PLOT SCALE = 50.0000 ' / IN. | CHECKED - RS | REVISED - | | | •• McHENRY & KANE | | CONTRACT NO. 60J73 | |
| | PLOT DATE = 2/11/2010 | DATE - 02-08-2010 | REVISED - | | SCALE: 50 / SHEET NO. 3 OF 23 SHEETS / STA. 105+00 TO STA. 134+00 | • 525/345 | ILLINOIS | FED. AID PROJECT | |

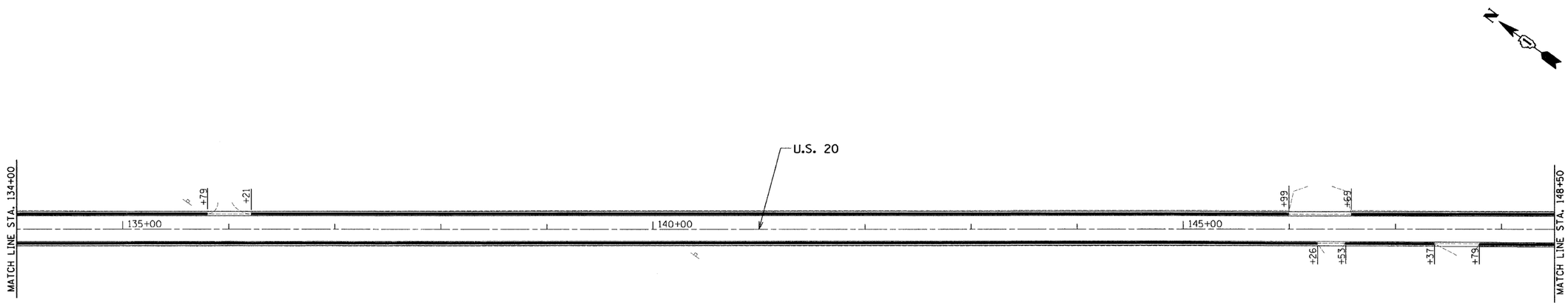


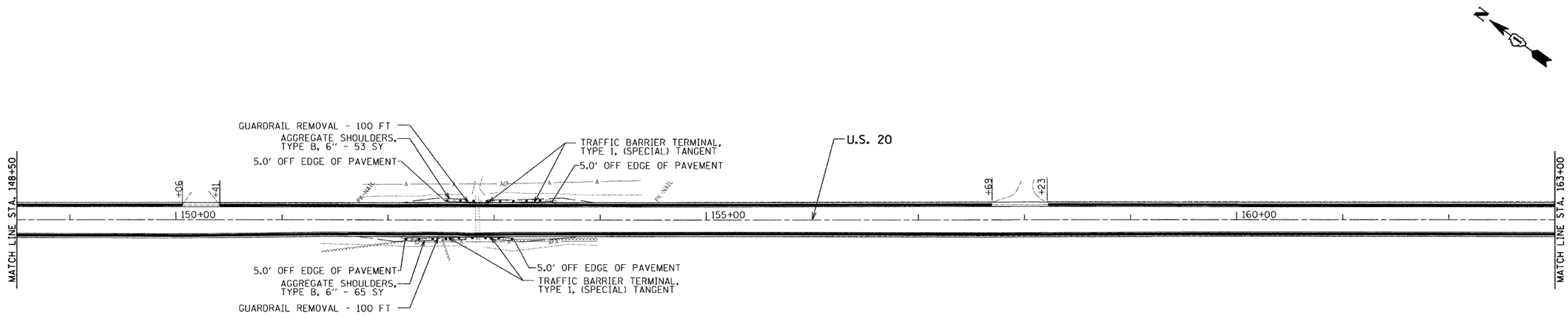


H:\Jobs2009\20093073-15\CAD\Site\dgn\00\D160J37-sht-plan04.dgn
2/11/2010 5:21:50 PM

| | | | | | | | | | | | |
|---|---|---|---|---|---|---|---|---|---|---|---|
| FILE NAME = $FILEL$ | USER NAME = _USER_ | DESIGNED - RS / EF | REVISED - | STATE OF ILLINOIS DEPARTMENT OF TRANSPORTATION | US 20 – WEST UNION ROAD TO IL 47 ROADWAY PLANS | F.A.U. RTE. | SECTION | COUNTY | TOTAL SHEETS | SHEET NO. |
| | | DRAWN - JJ / EF | REVISED - | | | * | 2009-089 I | ** | 46 | 12 |
| | PLOT SCALE = 50.0000 ' / IN. | CHECKED - RS | REVISED - | | | ** McHENRY & KANE | | CONTRACT NO. 60J73 | | |
| | PLOT DATE = 2/11/2010 | DATE - 02-08-2010 | REVISED - | | SCALE: 50 / SHEET NO. 4 OF 23 SHEETS / STA. 134+00 TO STA. 163+00 | * 525/345 | ILLINOIS | FED. AID PROJECT | | |

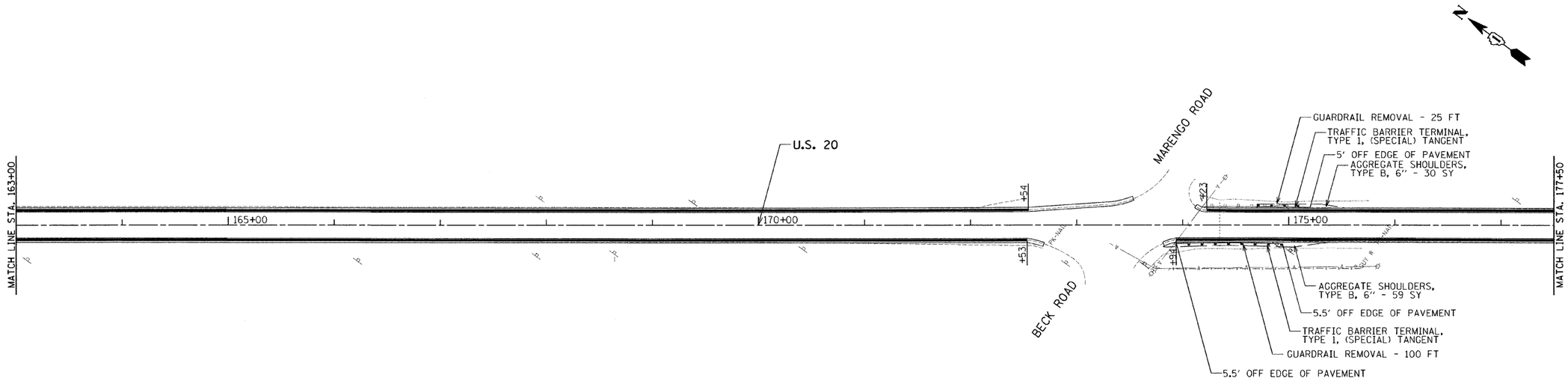


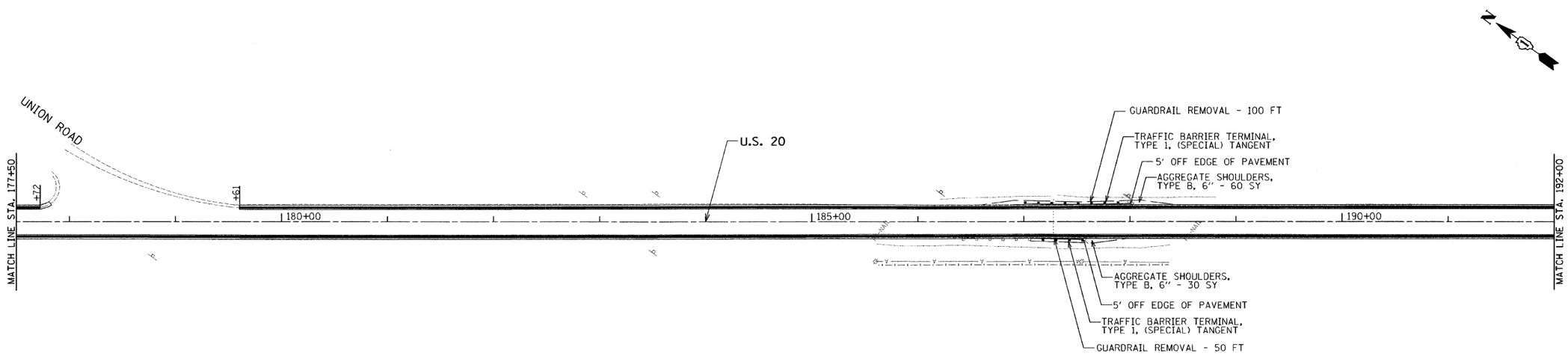


h:\jobs2009\20093023-15\cad\site\dgn\00\D160J37-sht-plan05.dgn
2/11/2010 4:00:58 PM

| | | | | | |
|---|---|---|---|---|---|
| FILE NAME = $FILEL$ | USER NAME = _USER_ | DESIGNED - RS / EF | REVISED - | STATE OF ILLINOIS DEPARTMENT OF TRANSPORTATION | US 20 – WEST UNION ROAD TO IL 47 ROADWAY PLANS |
| | | DRAWN - JJ / EF | REVISED - | | |
| | PLOT SCALE = 50.0000 ' / IN. | CHECKED - RS | REVISED - | | |
| | PLOT DATE = 2/11/2010 | DATE - 02-08-2010 | REVISED - | | SCALE: 50 \| SHEET NO. 5 OF 23 SHEETS \| STA. 163+00 TO STA. 192+00 |

| F.A.U. RTE. | SECTION | COUNTY | TOTAL SHEETS | SHEET NO. |
|---|---|---|---|---|
| * | 2009-089 I | ** | 46 | 13 |
| ** McHENRY & KANE | | CONTRACT NO. 60J73 | | |
| * 525/345 | ILLINOIS | FED. AID PROJECT | | |

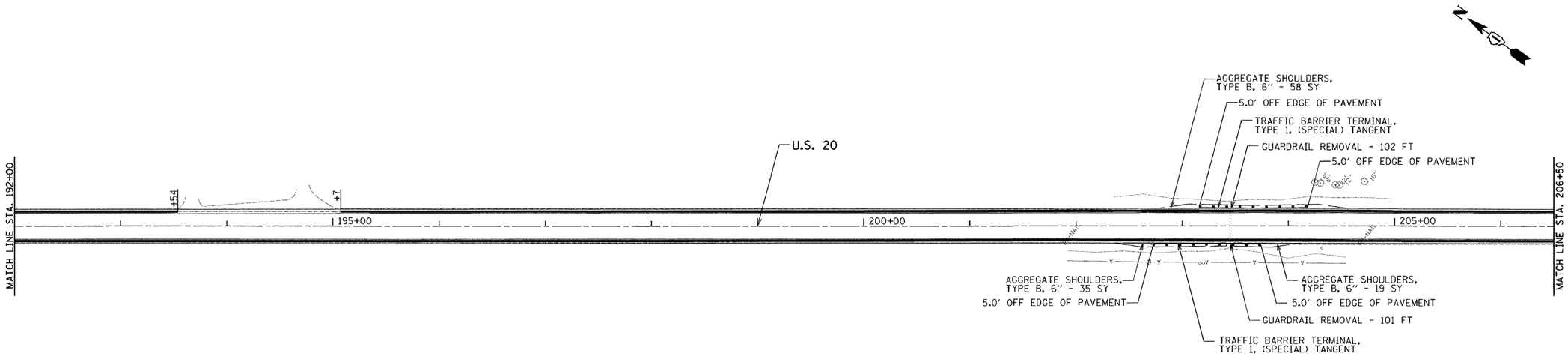


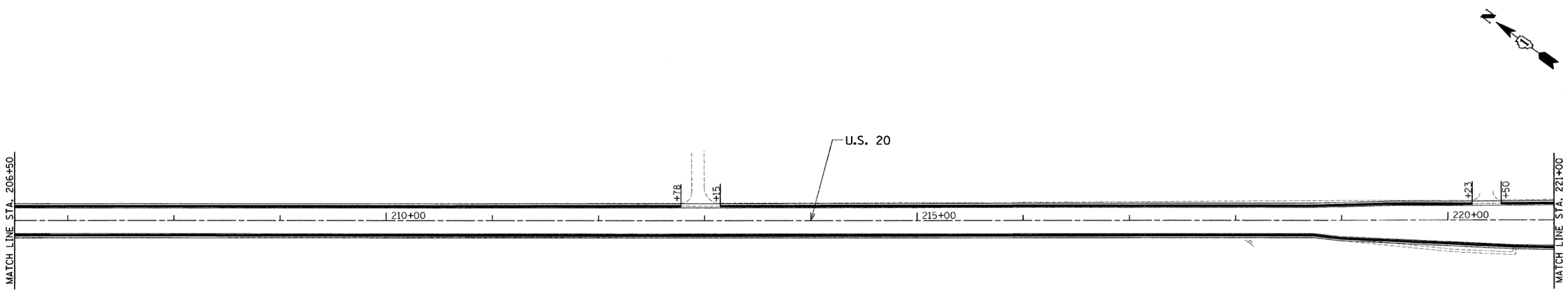


h:\jobs2009\20093023-15\cad\site\dgn\00\D160J37-sht-plan06.dgn
2/11/2010 4:01:04 PM

| | | | | | |
|---|---|---|---|---|---|
| FILE NAME = $FILEL$ | USER NAME = _USER_ | DESIGNED - RS / EF | REVISED - | STATE OF ILLINOIS DEPARTMENT OF TRANSPORTATION | US 20 – WEST UNION ROAD TO IL 47 ROADWAY PLANS |
| | | DRAWN - JJ / EF | REVISED - | | |
| | PLOT SCALE = 50.0000 ' / IN. | CHECKED - RS | REVISED - | | |
| | PLOT DATE = 2/11/2010 | DATE - 02-08-2010 | REVISED - | | SCALE: 50 SHEET NO. 6 OF 23 SHEETS STA. 192+00 TO STA. 221+00 |

| F.A.U. RTE. | SECTION | COUNTY | TOTAL SHEETS | SHEET NO. |
|---|---|---|---|---|
| * | 2009-089 I | ** | 46 | 14 |
| ** McHENRY & KANE | | CONTRACT NO. 60J73 | | |
| * 525/345 | ILLINOIS FED. AID PROJECT | | | |

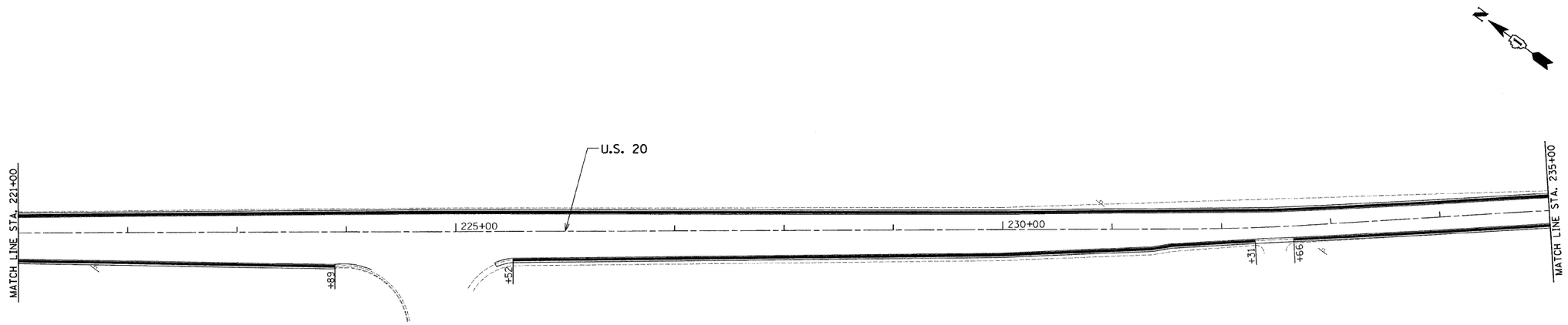


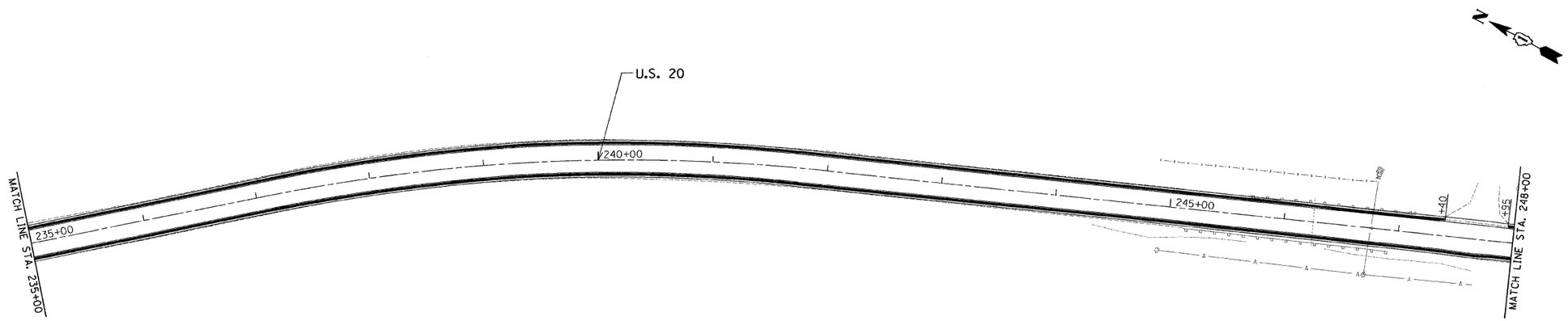


h:\jobs2009\20093023-15\cad\site\dgn\00\D160J37-sht-plan07.dgn
2/11/2010 4:01:08 PM

| | | | | | | | | | | |
|---|---|---|---|---|---|---|---|---|---|---|
| FILE NAME = $FILEL$ | USER NAME = _USER_ | DESIGNED - RS / EF | REVISED - | STATE OF ILLINOIS DEPARTMENT OF TRANSPORTATION | US 20 – WEST UNION ROAD TO IL 47 ROADWAY PLANS | | | F.A.U. RTE. | SECTION | COUNTY | TOTAL SHEETS | SHEET NO. |
| | | DRAWN - JJ / EF | REVISED - | | | | | • | 2009-089 I | •• | 46 | 15 |
| | PLOT SCALE = 50.0000 ' / IN. | CHECKED - RS | REVISED - | | | | | •• McHENRY & KANE | | CONTRACT NO. 60J73 | | |
| | PLOT DATE = 2/11/2010 | DATE - 02-08-2010 | REVISED - | | SCALE: 50 | SHEET NO. 7 OF 23 SHEETS | STA. 221+00 TO STA. 248+00 | • 525/345 | ILLINOIS | FED. AID PROJECT | | |

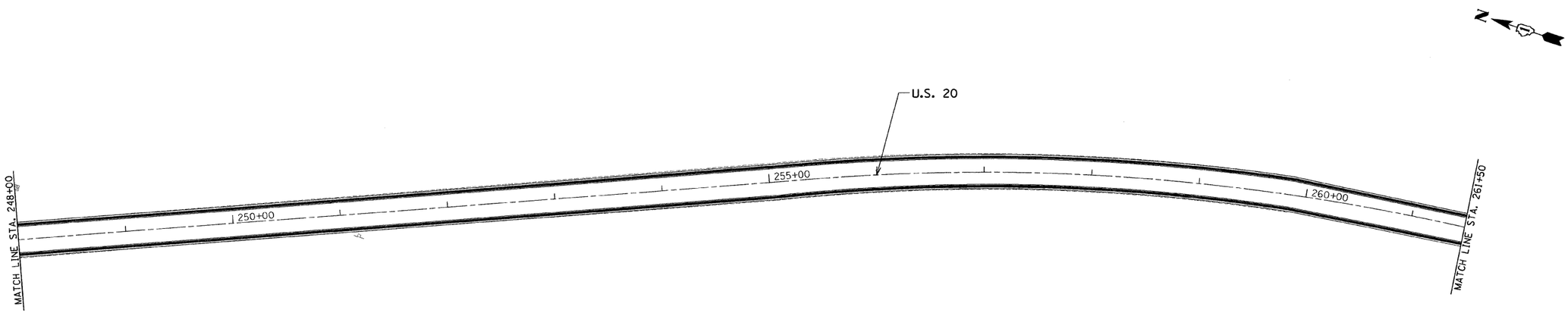


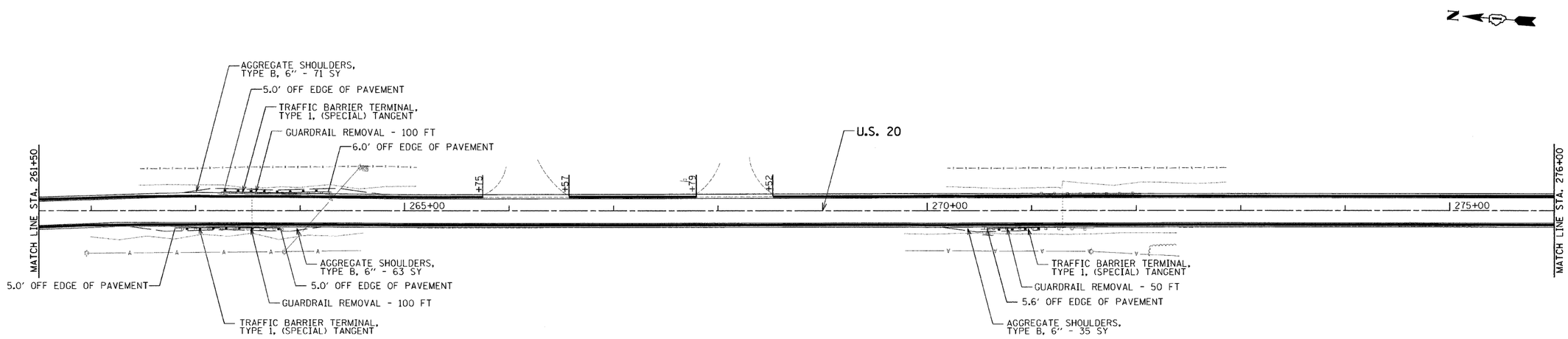


h:\jobs2009\20093023-15\cad\site\dgn\00\D160137-sht-plan08.dgn
2/11/2010 4:01:13 PM

| | | | | | | | | | | |
|---|---|---|---|---|---|---|---|---|---|---|
| FILE NAME = $FILEL$ | USER NAME = _USER_ | DESIGNED - RS / EF | REVISED - | STATE OF ILLINOIS DEPARTMENT OF TRANSPORTATION | US 20 – WEST UNION ROAD TO IL 47 ROADWAY PLANS | F.A.U. RTE. | SECTION | COUNTY | TOTAL SHEETS | SHEET NO. |
| | | DRAWN - JJ / EF | REVISED - | | | • | 2009-089 I | •• | 46 | 16 |
| | PLOT SCALE = 50.0001 ' / IN. | CHECKED - RS | REVISED - | | | •• McHENRY & KANE | | CONTRACT NO. 60J73 | | |
| | PLOT DATE = 2/11/2010 | DATE - 02-08-2010 | REVISED - | | SCALE: 50 / SHEET NO. 8 OF 23 SHEETS / STA. 248+00 TO STA. 276+00 | • 525/345 | ILLINOIS | FED. AID PROJECT | | |

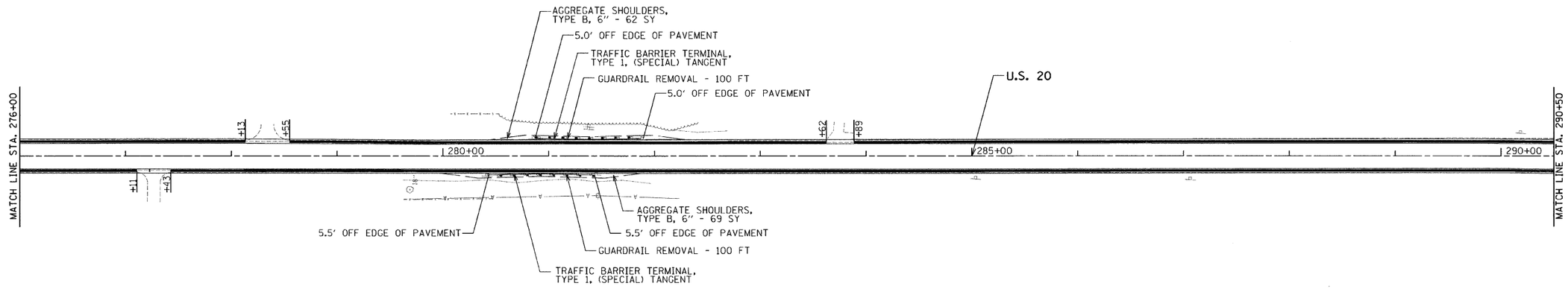


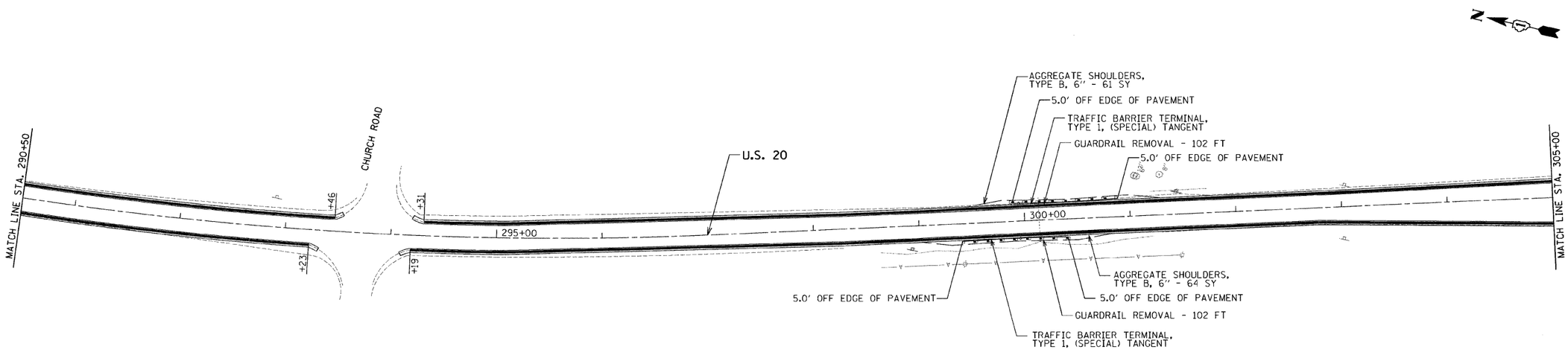


h:\jobs2009\20093023-15\cad\site\dgn\00\D160J37-sht-plan09.dgn
2/11/2010 4:01:18 PM

| | | | | | |
|---|---|---|---|---|---|
| FILE NAME = $FILEL$ | USER NAME = _USER_ | DESIGNED - RS / EF | REVISED - | STATE OF ILLINOIS DEPARTMENT OF TRANSPORTATION | US 20 – WEST UNION ROAD TO IL 47 ROADWAY PLANS |
| | | DRAWN - JJ / EF | REVISED - | | |
| | PLOT SCALE = 50.0000 ' / IN. | CHECKED - RS | REVISED - | | |
| | PLOT DATE = 2/11/2010 | DATE - 02-08-2010 | REVISED - | | SCALE: 50 / SHEET NO. 9 OF 23 SHEETS / STA. 276+00 TO STA. 305+00 |

| F.A.U. RTE. | SECTION | COUNTY | TOTAL SHEETS | SHEET NO. |
|---|---|---|---|---|
| • | 2009-089 I | •• | 46 | 17 |
| •• McHENRY & KANE | | CONTRACT NO. 60J73 | | |
| • 525/345 | ILLINOIS | FED. AID PROJECT | | |

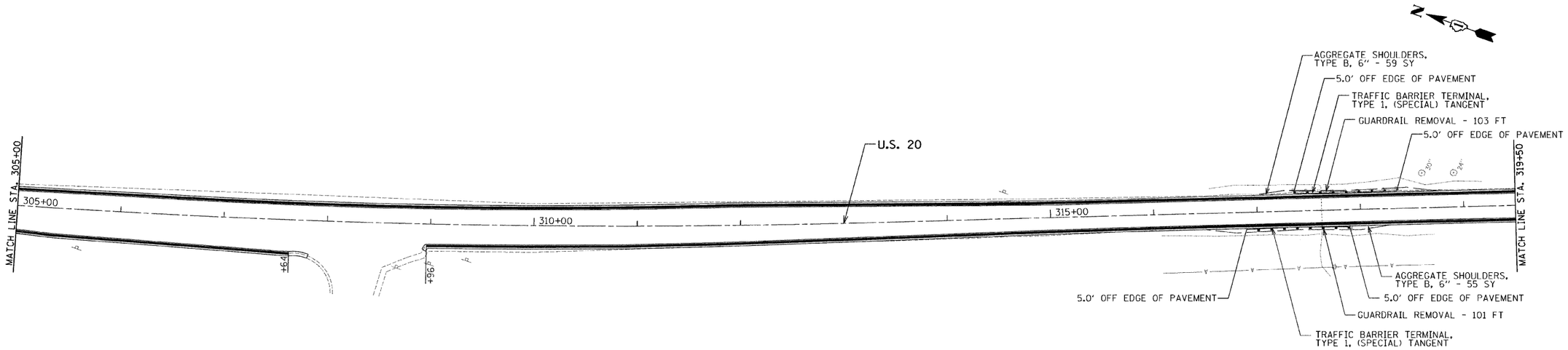


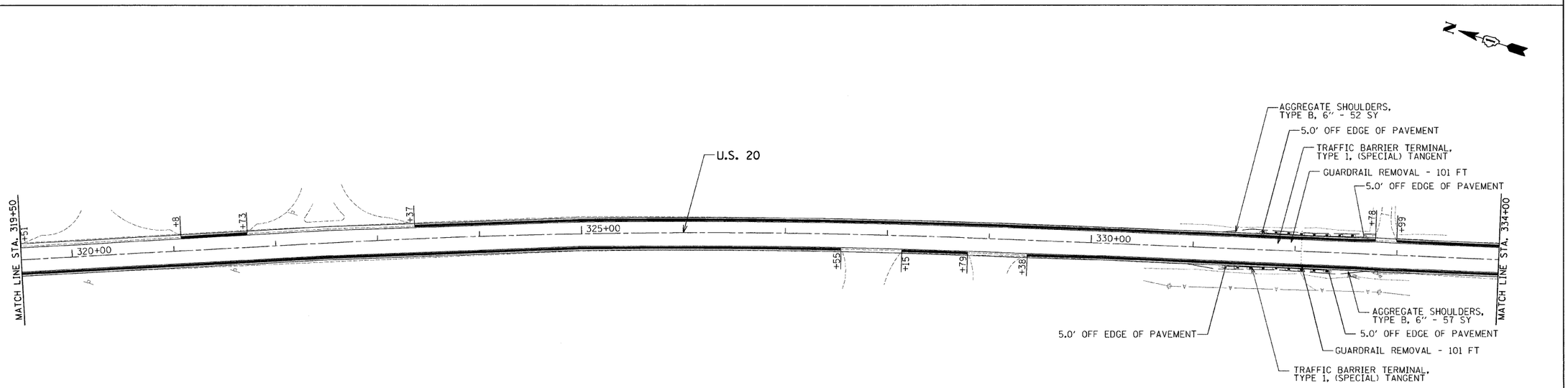


h:\jobs2009\20093023-15\cad\site\dgn\00\D160J37-sht-plan10.dgn
2/11/2010 4:01:24 PM

| | | | | | |
|---|---|---|---|---|---|
| FILE NAME = $FILEL$ | USER NAME = _USER_ | DESIGNED - RS / EF | REVISED - | STATE OF ILLINOIS DEPARTMENT OF TRANSPORTATION | US 20 – WEST UNION ROAD TO IL 47 ROADWAY PLANS |
| | | DRAWN - JJ / EF | REVISED - | | |
| | PLOT SCALE = 50.0000 ' / IN. | CHECKED - RS | REVISED - | | |
| | PLOT DATE = 2/11/2010 | DATE - 02-08-2010 | REVISED - | | SCALE: 50 \| SHEET NO. 10 OF 23 SHEETS \| STA. 305+00 TO STA. 334+00 |

| F.A.U. RTE. | SECTION | COUNTY | TOTAL SHEETS | SHEET NO. |
|---|---|---|---|---|
| • | 2009-089 I | •• | 46 | 18 |
| •• McHENRY & KANE | | CONTRACT NO. 60J73 | | |
| • 525/345 | ILLINOIS | FED. AID PROJECT | | |

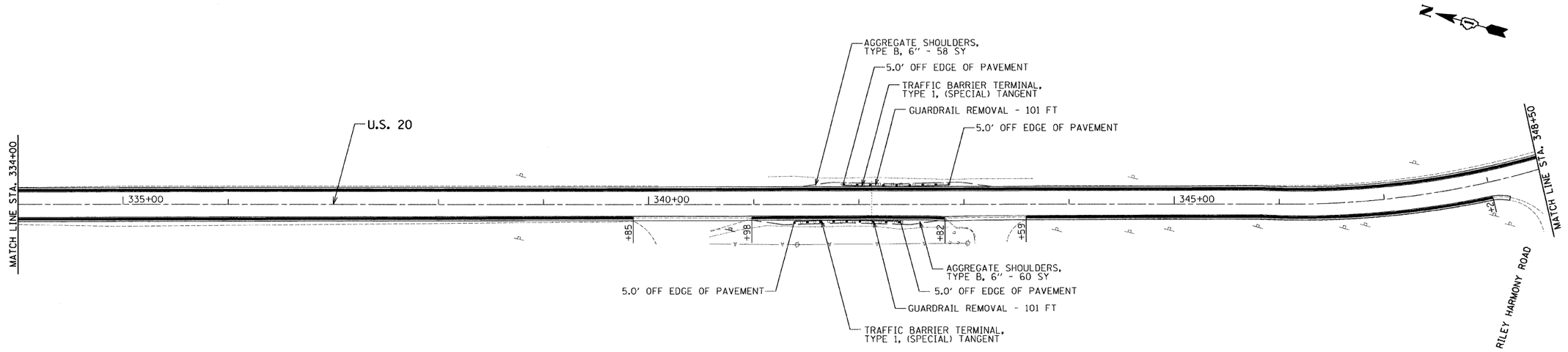


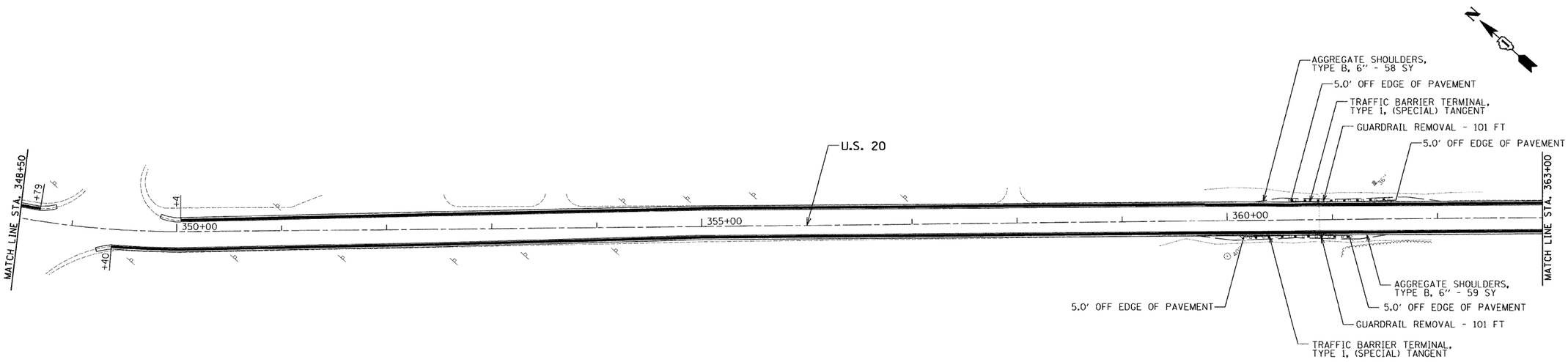


H:\Jobs2009\20091023-15\CAD\Site\dgn\00\D150137-sht-plan11.dgn
2/11/2010 5:30:30 PM

| | | | | | | | | | | |
|---|---|---|---|---|---|---|---|---|---|---|
| FILE NAME = $FILEL$ | USER NAME = _USER_ | DESIGNED - RS / EF | REVISED - | STATE OF ILLINOIS DEPARTMENT OF TRANSPORTATION | US 20 – WEST UNION ROAD TO IL 47 ROADWAY PLANS | F.A.U. RTE. | SECTION | COUNTY | TOTAL SHEETS | SHEET NO. |
| | | DRAWN - JJ / EF | REVISED - | | | • | 2009-089 I | •• | 46 | 19 |
| | PLOT SCALE = 50.0000 ' / IN. | CHECKED - RS | REVISED - | | | •• McHENRY & KANE | | CONTRACT NO. 60J73 | | |
| | PLOT DATE = 2/11/2010 | DATE - 02-08-2010 | REVISED - | | SCALE: 50 / SHEET NO. 11 OF 23 SHEETS / STA. 334+00 TO STA. 363+00 | • 525/345 | ILLINOIS | FED. AID PROJECT | | |

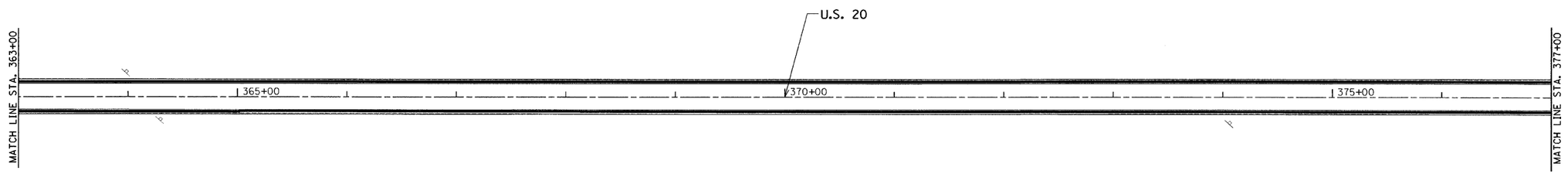


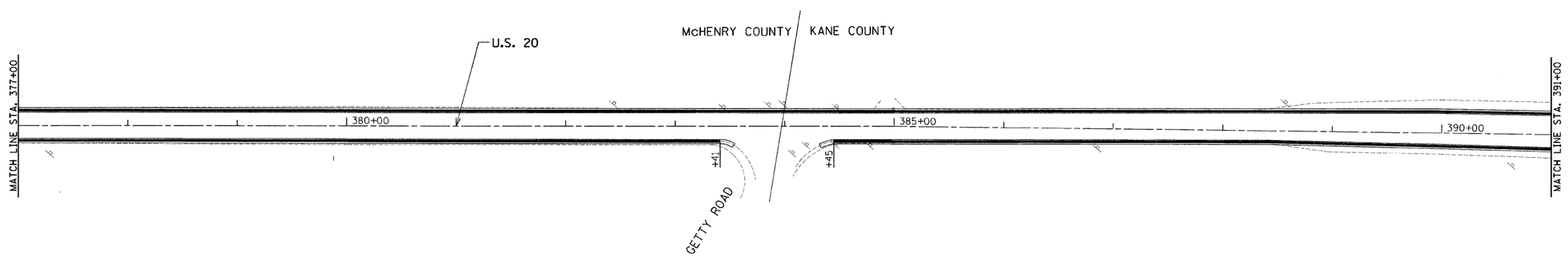


h:\jobs2009\20093023-15\cad\site\dgn\00\D160J37-sht-plan12.dgn
2/11/2010 4:01:35 PM

| | | | | | |
|---|---|---|---|---|---|
| FILE NAME = $FILEL$ | USER NAME = _USER_ | DESIGNED - RS / EF | REVISED - | STATE OF ILLINOIS DEPARTMENT OF TRANSPORTATION | US 20 – WEST UNION ROAD TO IL 47 ROADWAY PLANS |
| | | DRAWN - JJ / EF | REVISED - | | |
| | PLOT SCALE = 50.0001 ' / IN. | CHECKED - RS | REVISED - | | |
| | PLOT DATE = 2/11/2010 | DATE - 02-08-2010 | REVISED - | | SCALE: 50 · SHEET NO. 12 OF 23 SHEETS · STA. 363+00 TO STA. 391+00 |

| F.A.U. RTE. | SECTION | COUNTY | TOTAL SHEETS | SHEET NO. |
|---|---|---|---|---|
| * | 2009-089 I | ** | 46 | 20 |
| ** McHENRY & KANE | | CONTRACT NO. 60J73 | | |
| * 525/345 | ILLINOIS | FED. AID PROJECT | | |

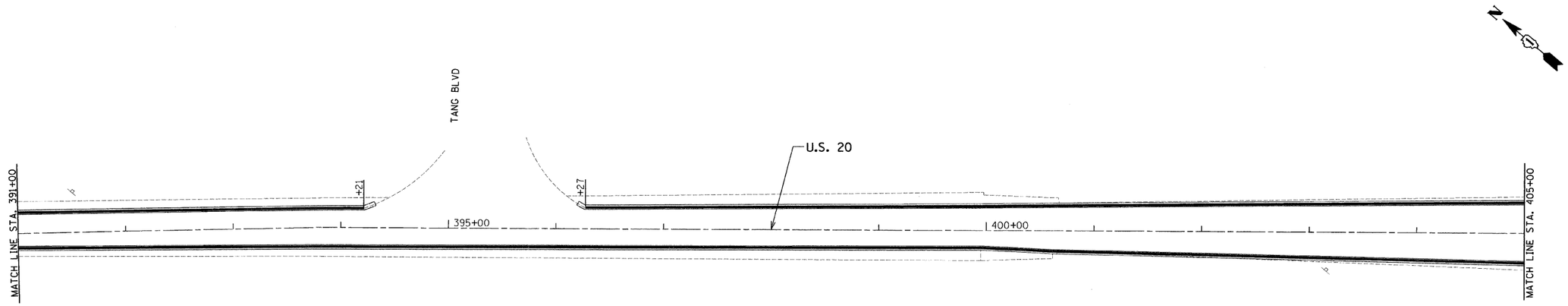


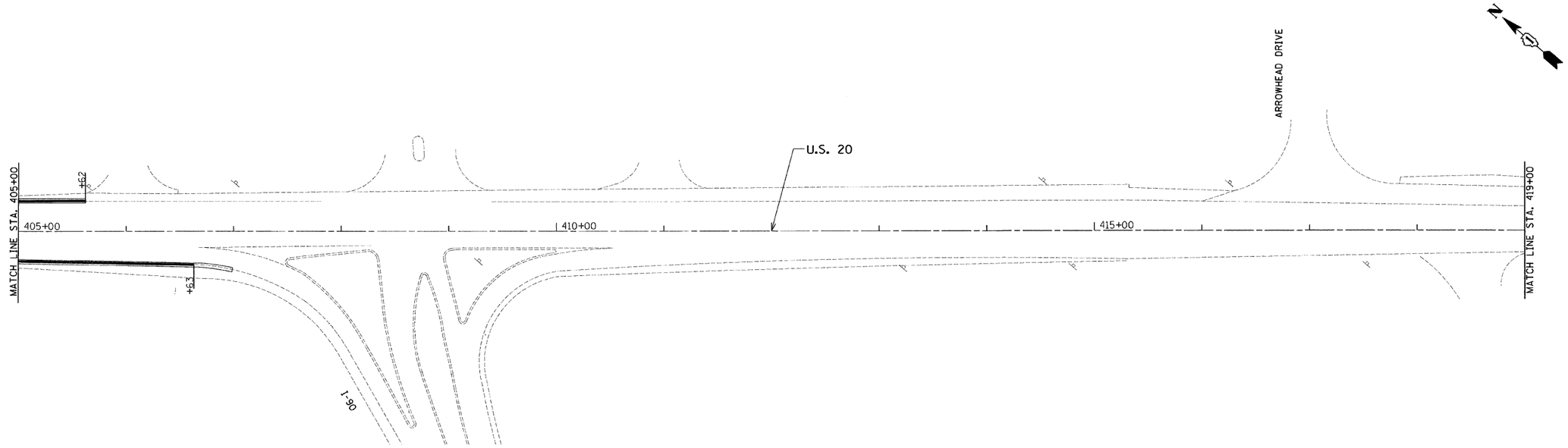


h:\jobs2009\20093023-15\cad\site\dgn\00\D160J37-sht-plan13.dgn
2/11/2010 4:01:39 PM

| | | | | | |
|---|---|---|---|---|---|
| FILE NAME = $FILEL$ | USER NAME = _USER_ | DESIGNED - RS / EF | REVISED - | STATE OF ILLINOIS DEPARTMENT OF TRANSPORTATION | US 20 – WEST UNION ROAD TO IL 47 ROADWAY PLANS |
| | | DRAWN - JJ / EF | REVISED - | | |
| | PLOT SCALE = 50.0000 ' / IN. | CHECKED - RS | REVISED - | | |
| | PLOT DATE = 2/11/2010 | DATE - 02-08-2010 | REVISED - | | |

SCALE: 50 | SHEET NO. 13 OF 23 SHEETS | STA. 391+00 TO STA. 419+00

| F.A.U. RTE. | SECTION | COUNTY | TOTAL SHEETS | SHEET NO. |
|---|---|---|---|---|
| * | 2009-089 I | ** | 46 | 21 |
| ** McHENRY & KANE | | CONTRACT NO. 60J73 | | |
| * 525/345 | ILLINOIS | FED. AID PROJECT | | |

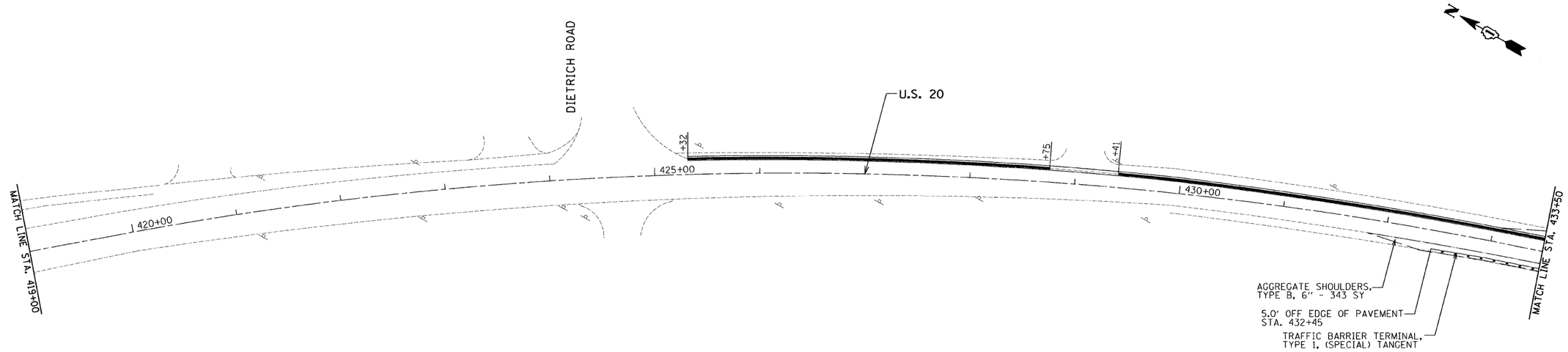


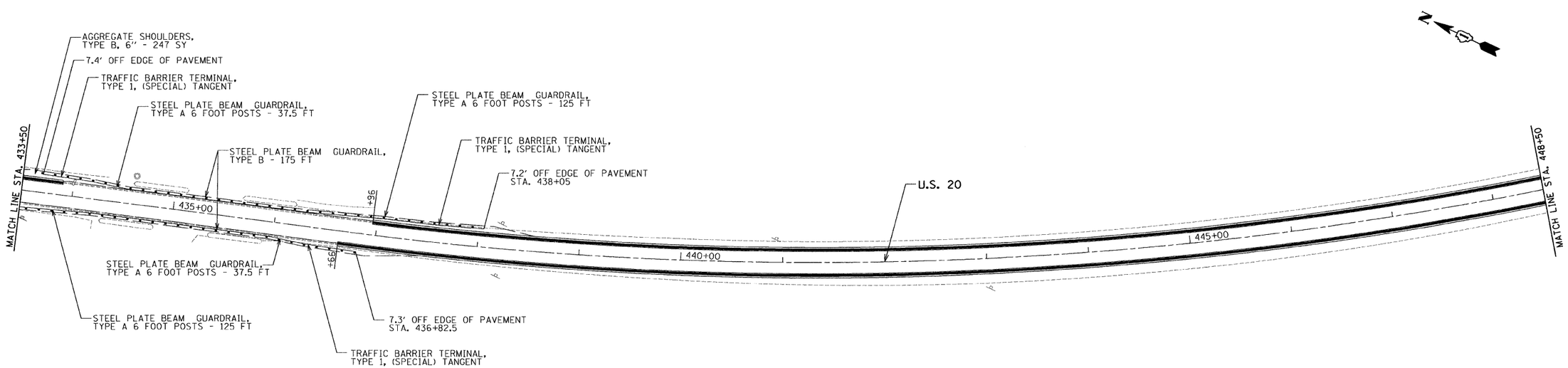


H:\Jobs2009\20093073-15\CAD\Site\dgn\00\D160J7-sht-plan14.dgn
2/11/2010 5:24:51 PM

| | | | | | | | | | | |
|---|---|---|---|---|---|---|---|---|---|---|
| FILE NAME = $FILEL$ | USER NAME = _USER_ | DESIGNED - RS / EF | REVISED - | STATE OF ILLINOIS DEPARTMENT OF TRANSPORTATION | US 20 – WEST UNION ROAD TO IL 47 ROADWAY PLANS | F.A.U. RTE. | SECTION | COUNTY | TOTAL SHEETS | SHEET NO. |
| | | DRAWN - JJ / EF | REVISED - | | | • | 2009-089 I | •• | 46 | 22 |
| | PLOT SCALE = 50.0001 ' / IN. | CHECKED - RS | REVISED - | | | •• McHENRY & KANE | | CONTRACT NO. 60J73 | | |
| | PLOT DATE = 2/11/2010 | DATE - 02-08-2010 | REVISED - | | SCALE: 50 / SHEET NO. 14 OF 23 SHEETS / STA. 419+00 TO STA. 448+50 | • 525/345 | ILLINOIS | FED. AID PROJECT | | |

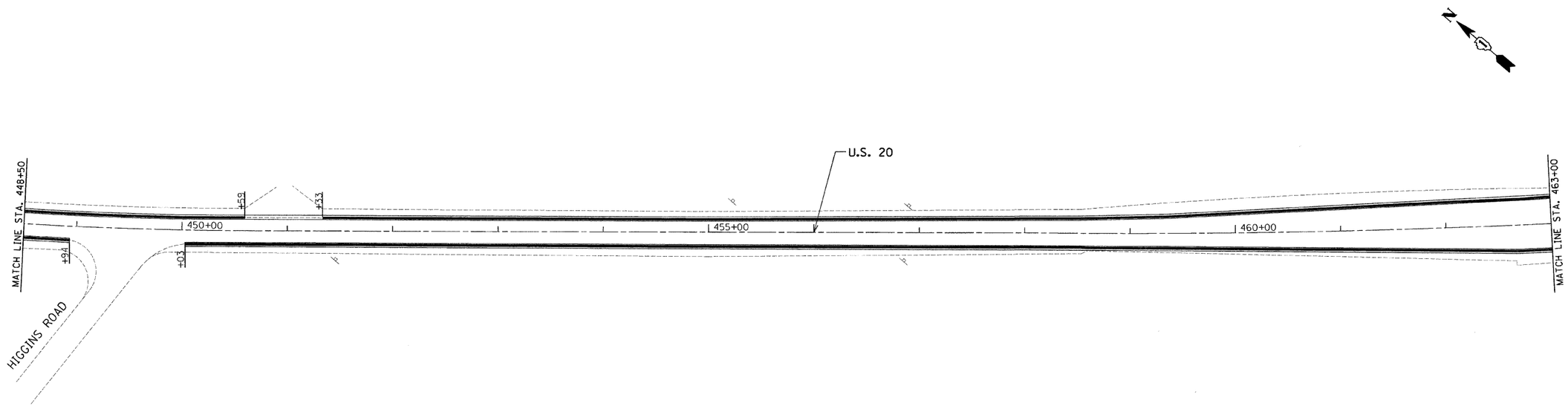


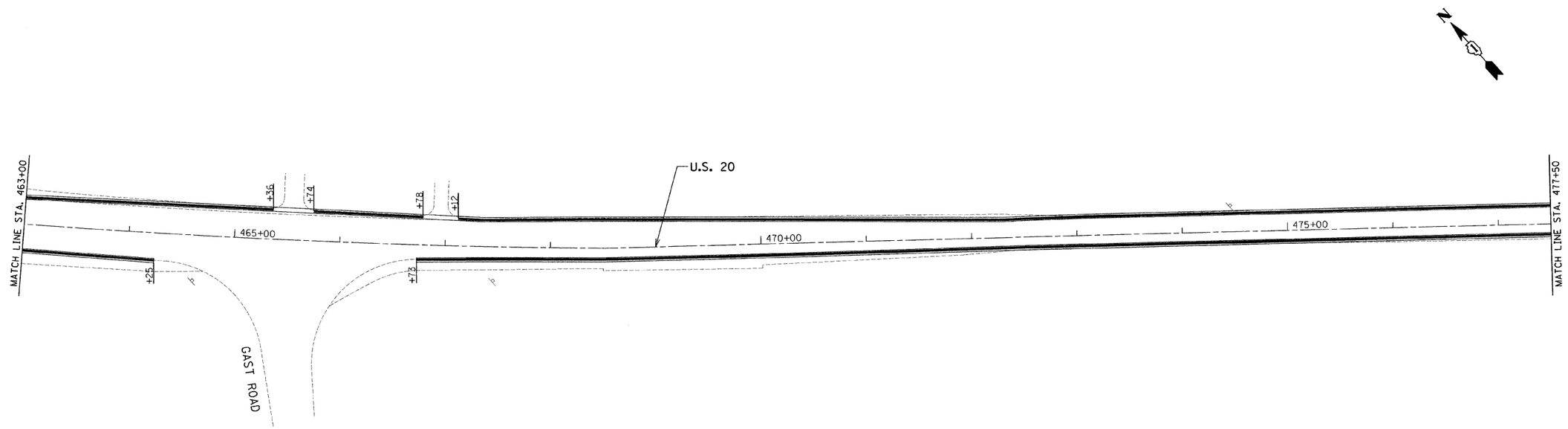


h:\jobs2009\20093023-15\cad\site\dgn\00\D160137-sht-plan15.dgn
2/11/2010 4:01:49 PM

| | | | | | | | | | |
|---|---|---|---|---|---|---|---|---|---|
| FILE NAME = $FILEL$ | USER NAME = _USER_ | DESIGNED - RS / EF | REVISED - | STATE OF ILLINOIS DEPARTMENT OF TRANSPORTATION | US 20 – WEST UNION ROAD TO IL 47 ROADWAY PLANS | F.A.U. RTE. | SECTION | COUNTY | TOTAL SHEETS / SHEET NO. |
| | | DRAWN - JJ / EF | REVISED - | | | • | 2009-089 I | •• | 46 / 23 |
| | PLOT SCALE = 50.0000 ' / IN. | CHECKED - RS | REVISED - | | | •• McHENRY & KANE | | CONTRACT NO. 60J73 | |
| | PLOT DATE = 2/11/2010 | DATE - 02-08-2010 | REVISED - | | SCALE: 50 / SHEET NO. 15 OF 23 SHEETS / STA. 448+50 TO STA. 477+50 | • 525/345 | ILLINOIS | FED. AID PROJECT | |

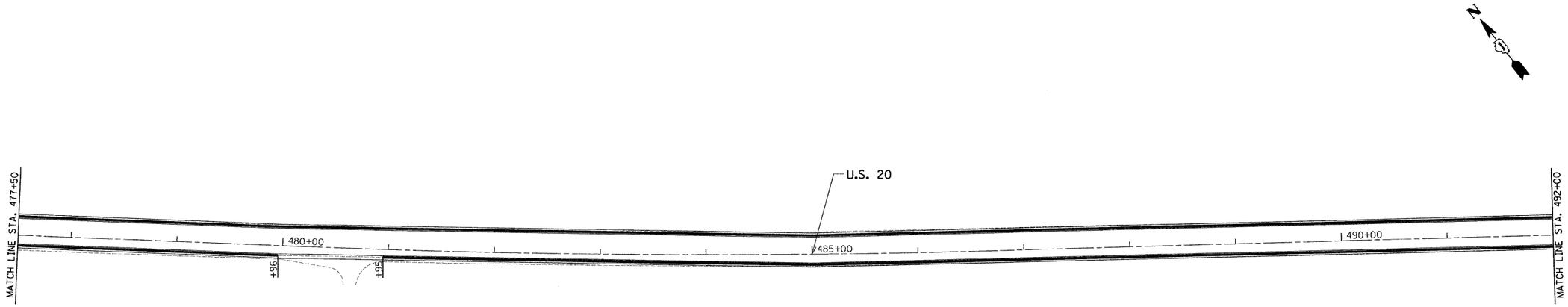


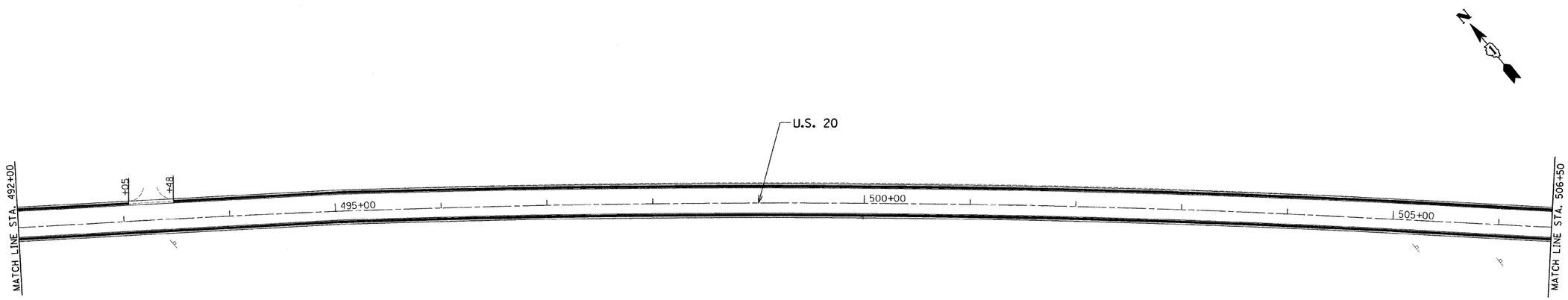


h:\jobs2009\20093023-15\cad\site\dgn\00\D160J37-sht-plan16.dgn
2/11/2010 4:01:53 PM

| | | | | | | | | | | |
|---|---|---|---|---|---|---|---|---|---|---|
| FILE NAME = $FILEL$ | USER NAME = _USER_ | DESIGNED - RS / EF | REVISED - | STATE OF ILLINOIS DEPARTMENT OF TRANSPORTATION | US 20 – WEST UNION ROAD TO IL 47 ROADWAY PLANS | F.A.U. RTE. | SECTION | COUNTY | TOTAL SHEETS | SHEET NO. |
| | | DRAWN - JJ / EF | REVISED - | | | * | 2009-089 I | ** | 46 | 24 |
| | PLOT SCALE = 50.0000 ' / IN. | CHECKED - RS | REVISED - | | | ** McHENRY & KANE | | CONTRACT NO. 60J73 | | |
| | PLOT DATE = 2/11/2010 | DATE - 02-08-2010 | REVISED - | | SCALE: 50 / SHEET NO. 16 OF 23 SHEETS / STA. 477+50 TO STA. 506+50 | * 525/345 | ILLINOIS | FED. AID PROJECT | | |

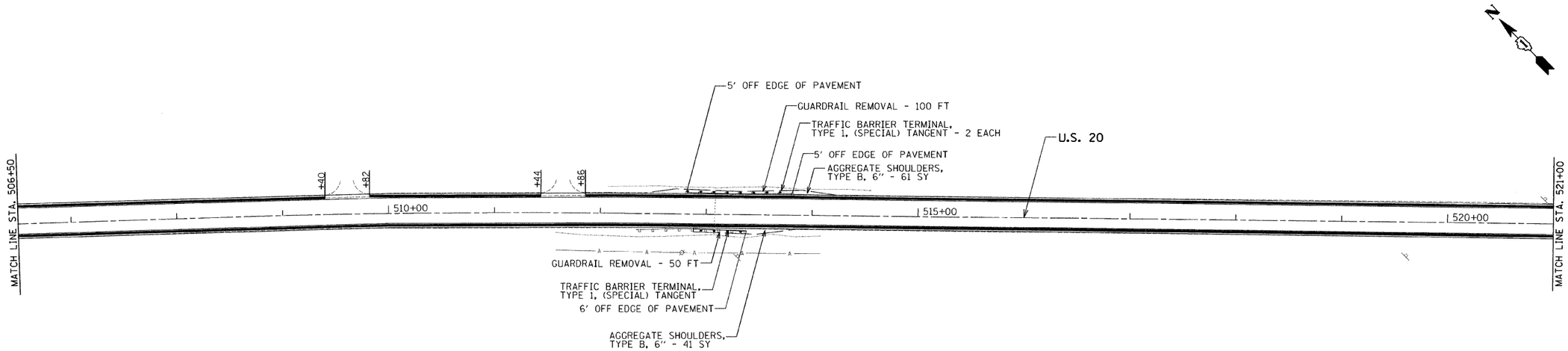


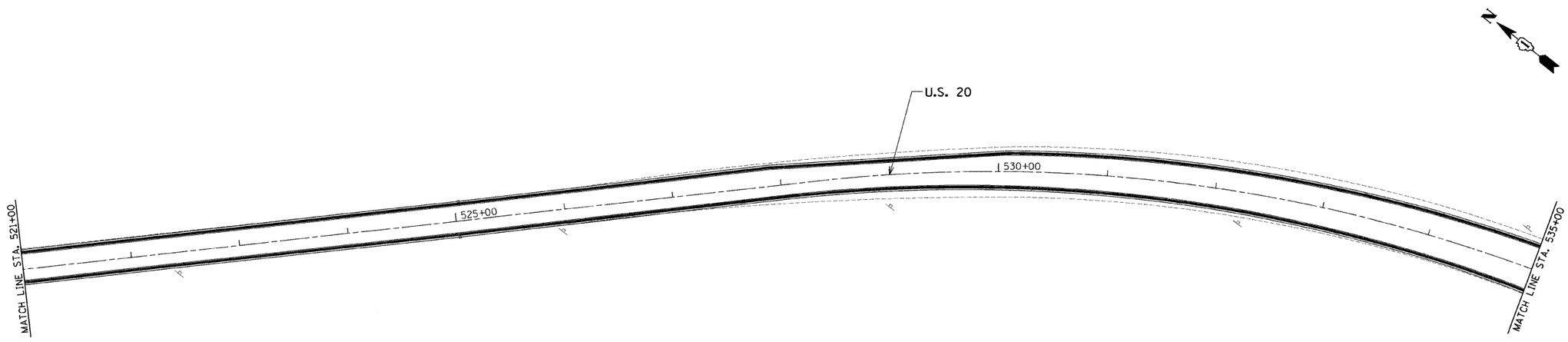


h:\jobs2009\20093023-15\cad\site\dgn\00\D160J37-sht-plan17.dgn
2/11/2010 4:01:58 PM

| | | | | | | | | | | |
|---|---|---|---|---|---|---|---|---|---|---|
| FILE NAME = $FILEL$ | USER NAME = _USER_ | DESIGNED - RS / EF | REVISED - | STATE OF ILLINOIS DEPARTMENT OF TRANSPORTATION | US 20 – WEST UNION ROAD TO IL 47 ROADWAY PLANS | | | F.A.U. RTE. | SECTION | COUNTY | TOTAL SHEETS | SHEET NO. |
| | | DRAWN - JJ / EF | REVISED - | | | | | • | 2009-089 I | •• | 46 | 25 |
| | PLOT SCALE = 50.0001 ' / IN. | CHECKED - RS | REVISED - | | | | | •• McHENRY & KANE | | CONTRACT NO. 60J73 | | |
| | PLOT DATE = 2/11/2010 | DATE - 02-08-2010 | REVISED - | | SCALE: 50 | SHEET NO. 17 OF 23 SHEETS | STA. 506+50 TO STA. 535+00 | • 525/345 | ILLINOIS | FED. AID PROJECT | | |

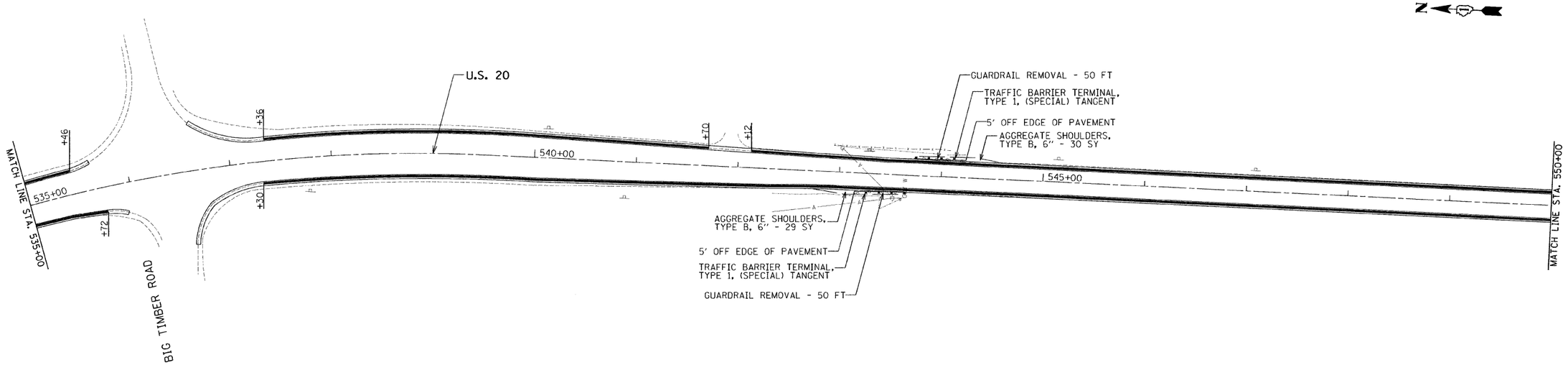


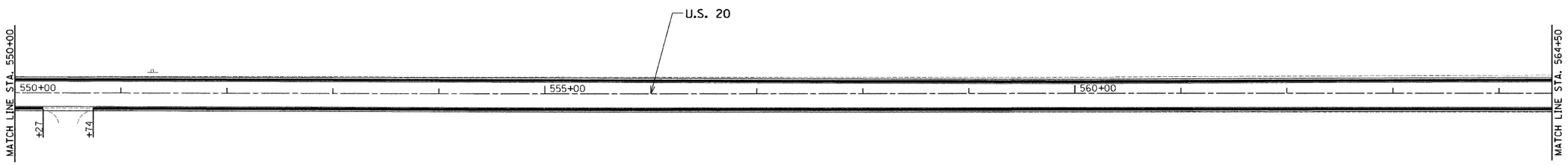


h:\jobs2009\20093023-15\cad\site\dgn\00\D160J37-sht-plan18.dgn
2/11/2010 4:02:04 PM

| | | | | | | | | | | |
|---|---|---|---|---|---|---|---|---|---|---|
| FILE NAME = $FILEL$ | USER NAME = _USER_ | DESIGNED - RS / EF | REVISED - | STATE OF ILLINOIS DEPARTMENT OF TRANSPORTATION | US 20 – WEST UNION ROAD TO IL 47 ROADWAY PLANS | F.A.U. RTE. | SECTION | COUNTY | TOTAL SHEETS | SHEET NO. |
| | | DRAWN - JJ / EF | REVISED - | | | • | 2009-089 I | •• | 46 | 26 |
| | PLOT SCALE = 50.0000 ' / IN. | CHECKED - RS | REVISED - | | | •• McHENRY & KANE | | CONTRACT NO. 60J73 | | |
| | PLOT DATE = 2/11/2010 | DATE - 02-08-2010 | REVISED - | | SCALE: 50 / SHEET NO. 18 OF 23 SHEETS / STA. 535+00 TO STA. 564+50 | • 525/345 | ILLINOIS | FED. AID PROJECT | | |

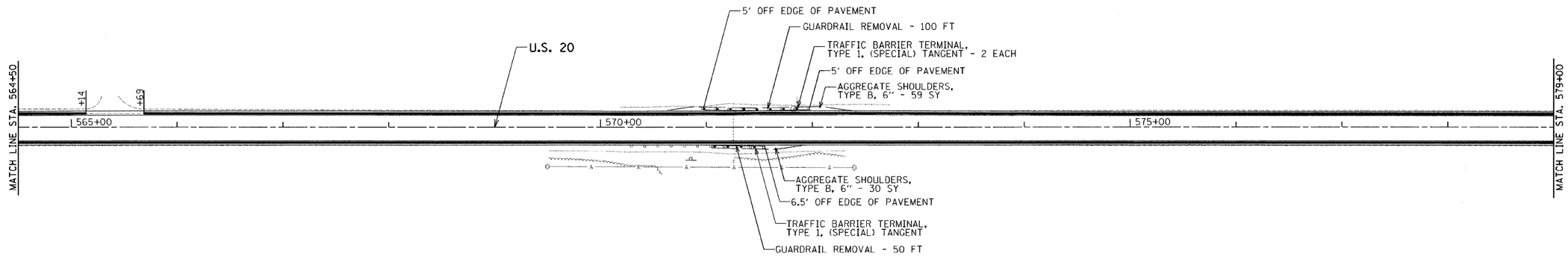


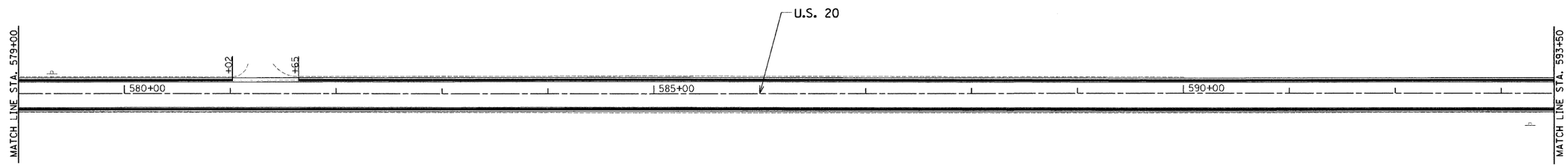


h:\jobs2009\20093023-15\cad\site\dgn\00\D160J37-sht-plan19.dgn
2/11/2010 4:02:08 PM

| | | | | | | | | | | |
|---|---|---|---|---|---|---|---|---|---|---|
| FILE NAME = $FILEL$ | USER NAME = _USER_ | DESIGNED - RS / EF | REVISED - | STATE OF ILLINOIS DEPARTMENT OF TRANSPORTATION | US 20 – WEST UNION ROAD TO IL 47 ROADWAY PLANS | F.A.U. RTE. | SECTION | COUNTY | TOTAL SHEETS | SHEET NO. |
| | | DRAWN - JJ / EF | REVISED - | | | • | 2009-089 I | •• | 46 | 27 |
| | PLOT SCALE = 50.0000 ' / IN. | CHECKED - RS | REVISED - | | | •• McHENRY & KANE | | CONTRACT NO. 60J73 | | |
| | PLOT DATE = 2/11/2010 | DATE - 02-08-2010 | REVISED - | | SCALE: 50 / SHEET NO. 19 OF 23 SHEETS / STA. 564+50 TO STA. 593+50 | • 525/345 | ILLINOIS | FED. AID PROJECT | | |

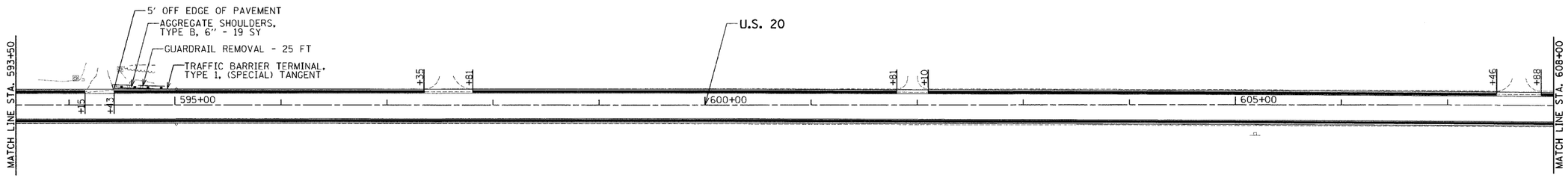


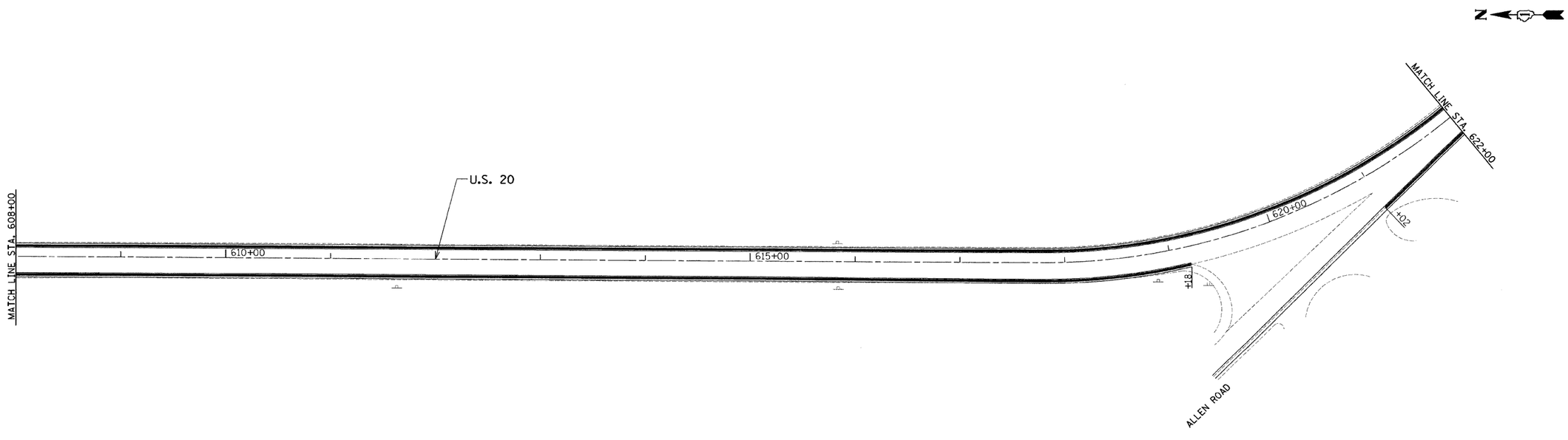


h:\jobs2009\20093023-15\cad\site\dgn\00\D160137-sht-plan20.dgn
2/11/2010 4:02:13 PM

| | | | | | | | | | | |
|---|---|---|---|---|---|---|---|---|---|---|
| FILE NAME = $FILEL$ | USER NAME = _USER_ | DESIGNED - RS / EF | REVISED - | STATE OF ILLINOIS DEPARTMENT OF TRANSPORTATION | US 20 – WEST UNION ROAD TO IL 47 ROADWAY PLANS | | | F.A.U. RTE. | SECTION | COUNTY | TOTAL SHEETS | SHEET NO. |
| | | DRAWN - JJ / EF | REVISED - | | | | | • | 2009-089 I | •• | 46 | 28 |
| | PLOT SCALE = 50.0000 ' / IN. | CHECKED - RS | REVISED - | | | | | •• McHENRY & KANE | | CONTRACT NO. 60J73 | | |
| | PLOT DATE = 2/11/2010 | DATE - 02-08-2010 | REVISED - | | SCALE: 50 | SHEET NO. 20 OF 23 SHEETS | STA. 593+50 TO STA. 622+00 | • 525/345 | ILLINOIS | FED. AID PROJECT | | |

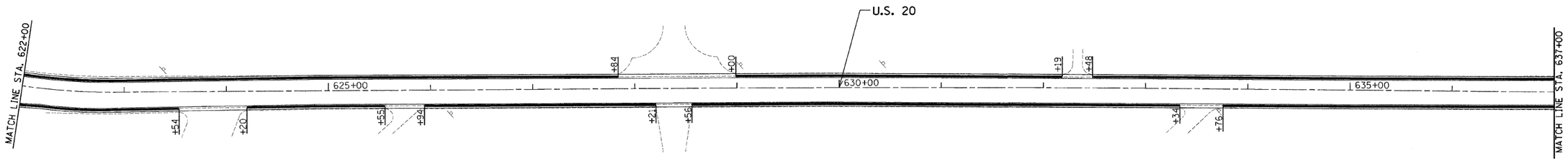


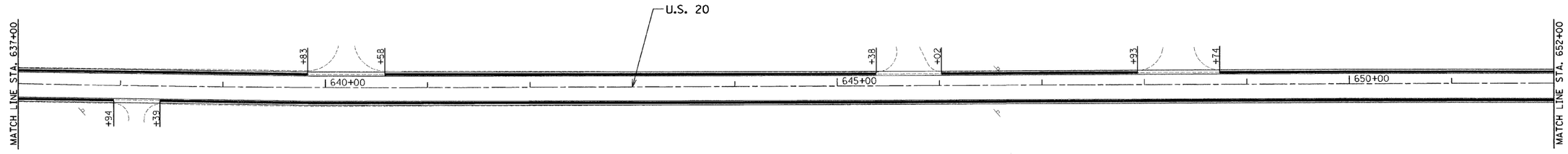


h:\jobs2009\20093023-15\cad\site\dgn\00\D160J37-sht-plan21.dgn
2/11/2010 4:02:18 PM

| | | | | |
|---|---|---|---|---|
| FILE NAME = $FILEL$ | USER NAME = _USER_ | DESIGNED - RS / EF | REVISED - | STATE OF ILLINOIS DEPARTMENT OF TRANSPORTATION |
| | | DRAWN - JJ / EF | REVISED - | |
| | PLOT SCALE = 50.0000 ' / IN. | CHECKED - RS | REVISED - | |
| | PLOT DATE = 2/11/2010 | DATE - 02-08-2010 | REVISED - | |

**US 20 – WEST UNION ROAD TO IL 47**
**ROADWAY PLANS**

SCALE: 50 | SHEET NO. 21 OF 23 SHEETS | STA. 622+00 TO STA. 652+00

| F.A.U. RTE. | SECTION | COUNTY | TOTAL SHEETS | SHEET NO. |
|---|---|---|---|---|
| * | 2009-089 I | ** | 46 | 29 |
| ** McHENRY & KANE | | CONTRACT NO. 60J73 | | |
| * 525/345 | ILLINOIS | FED. AID PROJECT | | |

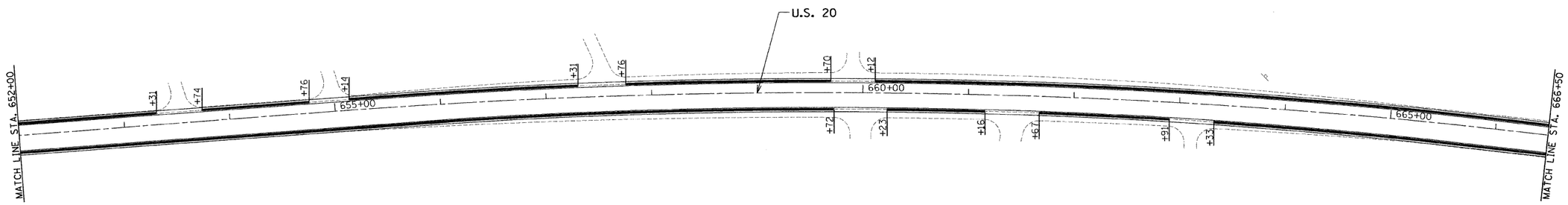


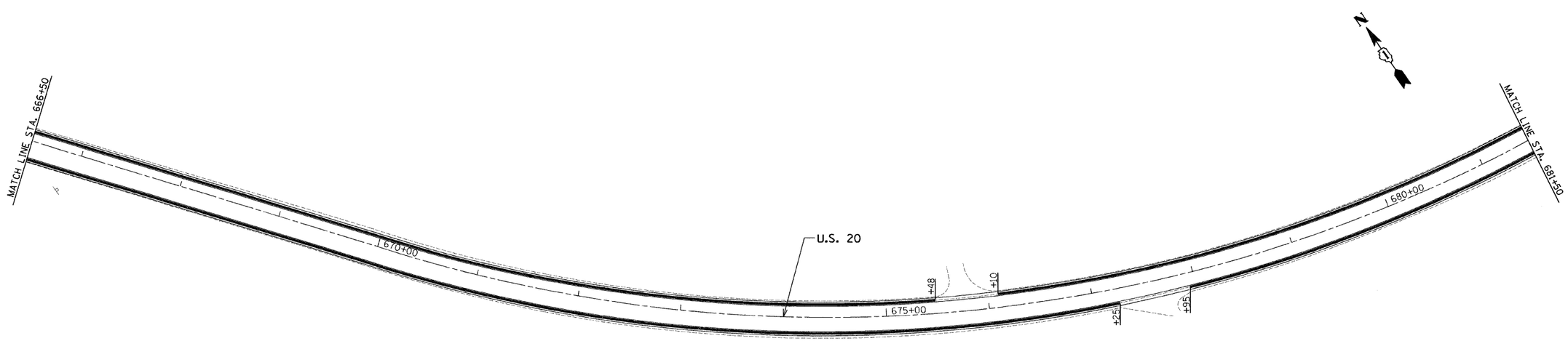


h:\jobs2009\20093023-15\cad\site\dgn\00\D160J37-sht-plan22.dgn
2/11/2010 4:02:22 PM

| | | | | | | | | | |
|---|---|---|---|---|---|---|---|---|---|
| FILE NAME = $FILEL$ | USER NAME = _USER_ | DESIGNED - RS / EF | REVISED - | STATE OF ILLINOIS DEPARTMENT OF TRANSPORTATION | US 20 – WEST UNION ROAD TO IL 47 ROADWAY PLANS | F.A.U. RTE. | SECTION | COUNTY | TOTAL SHEETS / SHEET NO. |
| | | DRAWN - JJ / EF | REVISED - | | | • | 2009-089 I | •• | 46 / 30 |
| | PLOT SCALE = 50.0000 ' / IN. | CHECKED - RS | REVISED - | | | •• McHENRY & KANE | | CONTRACT NO. 60J73 | |
| | PLOT DATE = 2/11/2010 | DATE - 02-08-2010 | REVISED - | | SCALE: 50 / SHEET NO. 22 OF 23 SHEETS / STA. 652+00 TO STA. 681+50 | • 525/345 | ILLINOIS | FED. AID PROJECT | |

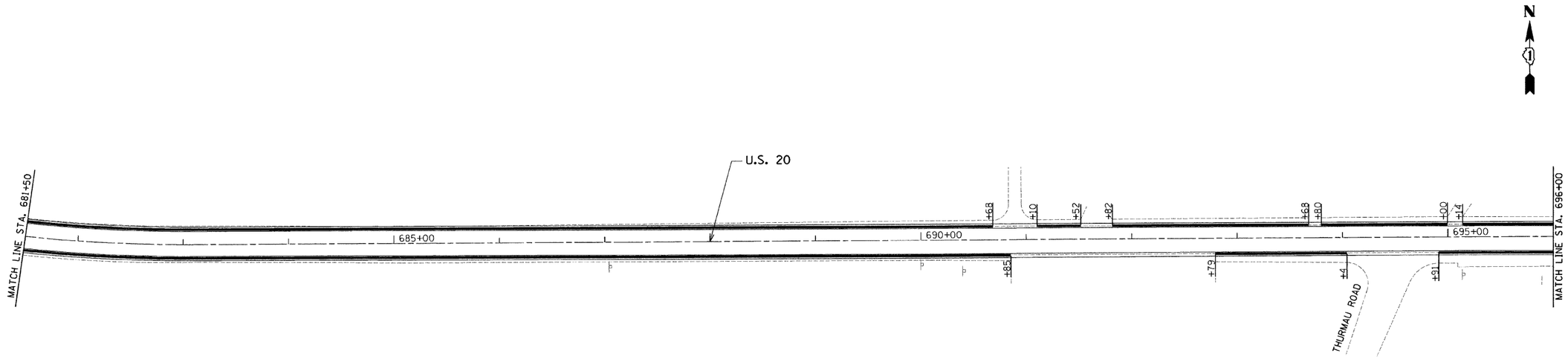


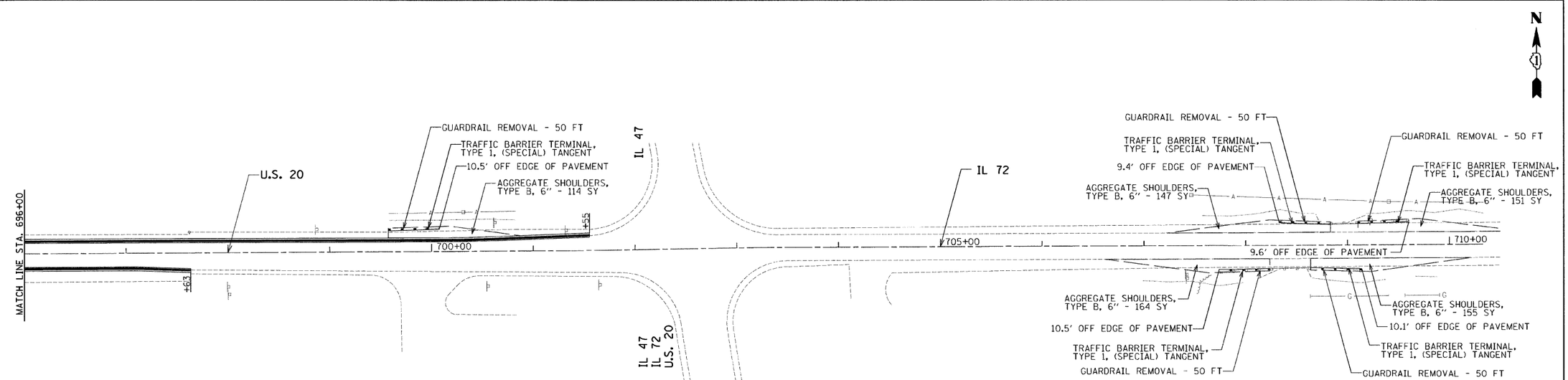


h:\jobs2009\20093023-15\cad\site\dgn\00\D160137-sht-plan23.dgn
2/11/2010 4:02:28 PM

| | | | | | |
|---|---|---|---|---|---|
| FILE NAME = $FILEL$ | USER NAME = _USER_ | DESIGNED - RS / EF | REVISED - | STATE OF ILLINOIS DEPARTMENT OF TRANSPORTATION | US 20 – WEST UNION ROAD TO IL 47 ROADWAY PLANS |
| | | DRAWN - JJ / EF | REVISED - | | |
| | PLOT SCALE = 50.0000 ' / IN. | CHECKED - RS | REVISED - | | |
| | PLOT DATE = 2/11/2010 | DATE - 02-08-2010 | REVISED - | | SCALE: 50 \| SHEET NO. 23 OF 23 SHEETS \| STA. 681+50 TO STA. 710+00 |

| F.A.U. RTE. | SECTION | COUNTY | TOTAL SHEETS | SHEET NO. |
|---|---|---|---|---|
| • | 2009-089 I | •• | 46 | 31 |
| •• McHENRY & KANE | | CONTRACT NO. 60J73 | | |
| • 525/345 | ILLINOIS FED. AID PROJECT | | | |

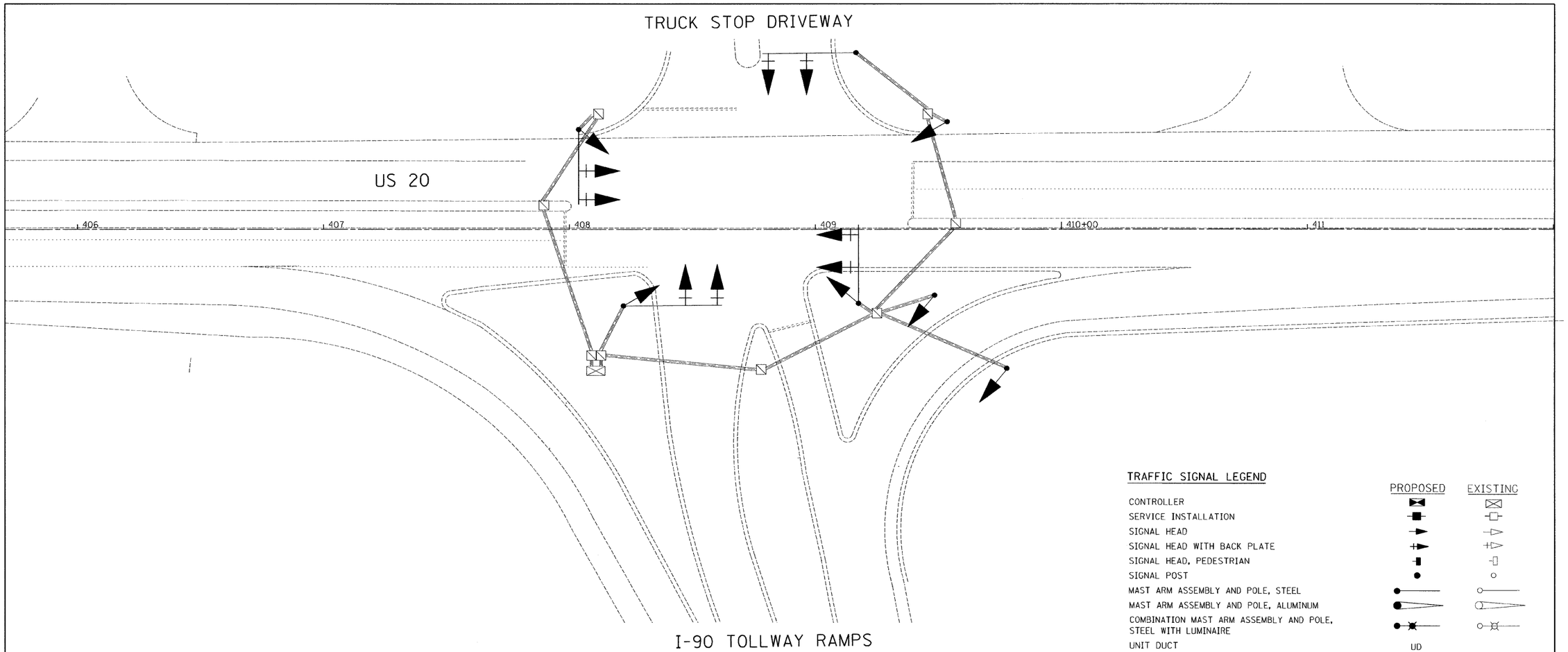


THE FOLLOWING ITEMS SHALL BE REMOVED BY THE CONTRACTOR AND SHALL BE DISPOSED OF BY THEM OUTSIDE THE RIGHT-OF-WAY AT THEIR EXPENSE. THE SALVAGE VALUE OF THE REMOVED EQUIPMENT SHALL BE REFLECTED IN THE CONTRACT BID PRICE.

| | | |
|---|---|---|
| 8 | EACH | TRAFFIC SIGNAL BACKPLATE |
| 14 | EACH | SIGNAL HEAD, 1-FACE |

## TRAFFIC SIGNAL LEGEND

| | PROPOSED | EXISTING |
|---|---|---|
| CONTROLLER | | |
| SERVICE INSTALLATION | | |
| SIGNAL HEAD | | |
| SIGNAL HEAD WITH BACK PLATE | | |
| SIGNAL HEAD, PEDESTRIAN | | |
| SIGNAL POST | | |
| MAST ARM ASSEMBLY AND POLE, STEEL | | |
| MAST ARM ASSEMBLY AND POLE, ALUMINUM | | |
| COMBINATION MAST ARM ASSEMBLY AND POLE, STEEL WITH LUMINAIRE | | |
| UNIT DUCT | UD | |
| COMMON TRENCH | CT | |
| HANDHOLE | | |
| HEAVY DUTY HANDHOLE | H | H |
| DOUBLE HANDHOLE | | |
| G.S. CONDUIT IN TRENCH (T) OR PUSHED (P) | | |
| PEDESTRIAN PUSHBUTTON DETECTOR | | |
| DETECTOR LOOP | | |
| CAST IRON JUNCTION BOX | | "E" |
| EMERGENCY VEHICLE LIGHT DETECTOR | | |
| CONFIRMATION BEACON | | |
| SIGNAL HEAD OPTICALLY PROGRAMMED | "P" | "P" |
| CONDUIT SPLICE | | |
| WOOD POLE | | "E" |
| RACEWAY FOR MAGNETIC DETECTOR, TYPE I OR TYPE II | | "E" |
| VEHICLE DETECTOR, NON COMPENSATED MAGNETIC TYPE | | |
| RAILROAD CONTROL CABINET | | "E" |
| TELEPHONE CONNECTION | T | T |
| ILLUMINATED SIGN "NO LEFT TURN" | | "E" |
| ILLUMINATED SIGN "NO RIGHT TURN" | | "E" |

H:\Jobs2009\20093023-I5\CAD\Site\dgn\00\D160137-sht-TS01.dgn
2/11/2010 4:20:12 PM

| | | | |
|---|---|---|---|
| FILE NAME = $FILEL$ | USER NAME = _USER_ | DESIGNED - | REVISED - |
| | | DRAWN - | REVISED - |
| | PLOT SCALE = 20.0000 ' / IN. | CHECKED - RS | REVISED - |
| | PLOT DATE = 2/11/2010 | DATE - 02-08-2010 | REVISED - |

**STATE OF ILLINOIS**
**DEPARTMENT OF TRANSPORTATION**

**US 20 – WEST UNION ROAD TO IL 47**
**TRAFFIC SIGNALS**

SCALE: 20 | SHEET NO. 1 OF 2 SHEETS | STA. | TO STA.

| F.A.U. RTE. | SECTION | COUNTY | TOTAL SHEETS | SHEET NO. |
|---|---|---|---|---|
| • | 2009-089 I | •• | 46 | 32 |
| •• McHENRY & KANE | | CONTRACT NO. 60J73 | | |
| • 525/ 345 | ILLINOIS FED. AID PROJECT | | | |

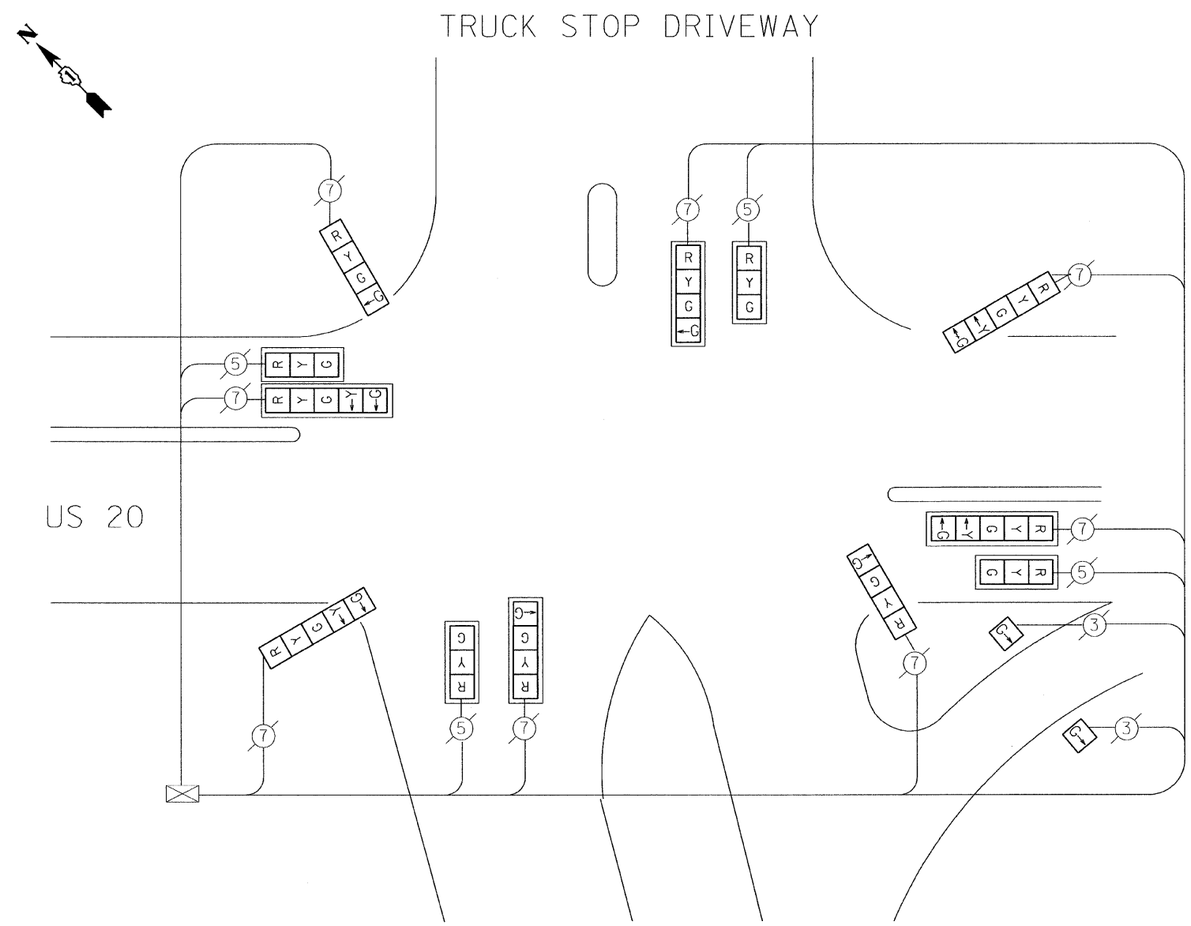


# CABLE PLAN

NOT TO SCALE

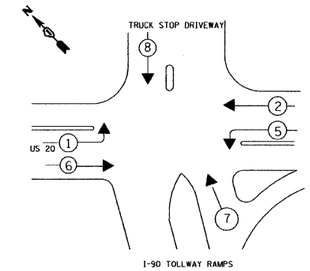


PHASE DESIGNATION DIAGRAM
NOT TO SCALE

## CABLE PLAN LEGEND

| EXISTING | PROPOSED | |
|---|---|---|
| G | G | 8" (200mm) TRAFFIC SIGNAL SECTION |
| R | R | 12" (300mm) TRAFFIC SIGNAL SECTION |
| W | W | 12" (300mm) PEDESTRIAN SIGNAL SECTION |
| | C D | 12" (300mm) PEDESTRIAN SIGNAL SECTION WITH COUNTDOWN TIMER |
| | | CONTROLLER CABINET |
| | | SERVICE INSTALLATION |
| | | VEHICLE DETECTOR, INDUCTION LOOP |
| T | T | TELEPHONE INSTALLATION |
| | | MAGNETIC DETECTOR |
| | | EMERGENCY VEHICLE LIGHT DETECTOR |
| | | CONFIRMATION BEACON |
| | | PUSHBUTTON DETECTOR |
| 2 | 2 | DENOTES NUMBER OF CONDUCTORS, ALL CABLE NO. 14 EXCEPT AS INDICATED. ALL LOOP DETECTOR CABLE TO BE SHIELDED. |
| 1 | 1 | GROUND CABLE IN CONDUIT NO. 6 SOLID COPPER (GREEN) |
| 24 | 24 | FIBER OPTIC CABLE IN CONDUIT NO. 62.5/125 2-MM12F SM12F |
| R Y G Y G "P" | R Y G Y G "P" | SIGNAL FACE WITH BACK PLATE "P" INDICATES PROGRAMMED HEAD. |
| "E" | | RAILROAD CONTROL CABINET |
| "E" | | ILLUMINATED SIGN "NO LEFT TURN" |
| "E" | | ILLUMINATED SIGN "NO RIGHT TURN" |
| | C | GROUND ROD AT HANDHOLE (H), DOUBLE HANDHOLE (H), OR CONTROLLER (C) |
| P | P | GROUND ROD AT POST (P) OR MAST ARM POLE (MA) |
| S | S | GROUND ROD AT ELECTRIC SERVICE INSTALLATION |
| B | B | UN-INTERRUPTIBLE POWER SUPPLY (UPS) |

| I.D.O.T. TRAFFIC SIGNAL INSTALLATION ELECTRICAL SERVICE REQUIREMENTS | | | | | TOTAL WATTAGE |
|---|---|---|---|---|---|
| TYPE | NO. LAMPS × | WATTAGE INCAND | WATTAGE LED × | % OPERATION | |
| SIGNAL (RED) | 10 | 135 | 17 | 0.50 | 85.0 |
| (YELLOW) | 10 | 135 | 25 | 0.25 | 62.5 |
| (GREEN) | 10 | 135 | 15 | 0.25 | 37.5 |
| ARROW | 4 | 135 | 12 | 0.10 | 4.8 |
| PED. SIGNAL | 6 | 90 | 25 | 1.00 | 150.0 |
| CONTROLLER | 1 | 100 | 100 | 1.00 | 100.0 |
| ILLUM. SIGN | | 84 | 35 | 0.05 | |
| | | | | | |
| | | | | | |
| | | | | | |
| FLASHER | | 135 | 25 | 0.50 | |
| | | | | TOTAL = | 439.8 |

ENERGY COST TO: **Illinois Department of Transportation**
Division of Highways / District 1
201 W Center Court/Schaumburg, Illinois 60196-1096

ENERGY SUPPLY: CONTACT: _____
PHONE: _____
COMPANY: _____

| FOUNDATION (DEPTH) | (FT.) | (m) | CABLE SLACK | (FT.) | (m) | CABLE SLACK | (FT.) | (m) |
|---|---|---|---|---|---|---|---|---|
| TYPE A - POST | 4 | (1.2) | HANDHOLE | 6.5 | (2.0) | ALL FOUNDATIONS | 3.5 | (1.0) |
| D - CONTROLLER | 4 | (1.2) | DOUBLE HANDHOLE | 13 | (4.0) | MAST ARM (L) POLE | 20'-L-2= (6m-L-0.6m)= | |
| E - M. ARM POLE | | | SIGNAL POST | 2 | (1.0) | | | |
| 24" (600mm) | 10 | (3.0) | CONTROLLER CAB. | 1 | (0.5) | BRACKET MOUNTED | 13 | (4.0) |
| 30" (750mm) | 15 | (4.6) | FIBER OPTIC | 13 | (4.0) | PED. PUSHBUTTON | 4 | (1.2) |
| | | | ELECTRIC SERVICE | 1 | (0.5) | ELECTRIC SERVICE | 13.5 | (4.1) |
| | | | GROUND CABLE | 1 | (0.5) | SERVICE TO GROUND | 13.5 | (4.1) |
| | | | | | | POST MOUNTED | 6 | (1.8) |

H:\Jobs82009\20093023-IL\CAD\Site\dgn\00\D16037-sht-TS02.dgn
2/11/2010 9:22:51 PM

| | | | |
|---|---|---|---|
| FILE NAME = $FILE1$ | USER NAME = $USER$ | DESIGNED - | REVISED - |
| | | DRAWN - | REVISED - |
| | PLOT SCALE = 50:0.0000 ':' / IN. | CHECKED - RS | REVISED - |
| | PLOT DATE = 2/11/2010 | DATE - 02-08-2010 | REVISED - |

**STATE OF ILLINOIS**
**DEPARTMENT OF TRANSPORTATION**

**US 20 – WEST UNION ROAD TO IL 47**
**TRAFFIC SIGNALS**

SCALE: 20 | SHEET NO. 2 OF 2 SHEETS | STA. | TO STA.

| F.A.U. RTE. | SECTION | COUNTY | TOTAL SHEETS | SHEET NO. |
|---|---|---|---|---|
| • | 2009-089 I | •• | 46 | 33 |
| | | •• McHENRY & KANE | CONTRACT NO. 60J73 | |
| • 525/ 345 | ILLINOIS | FED. AID PROJECT | | |

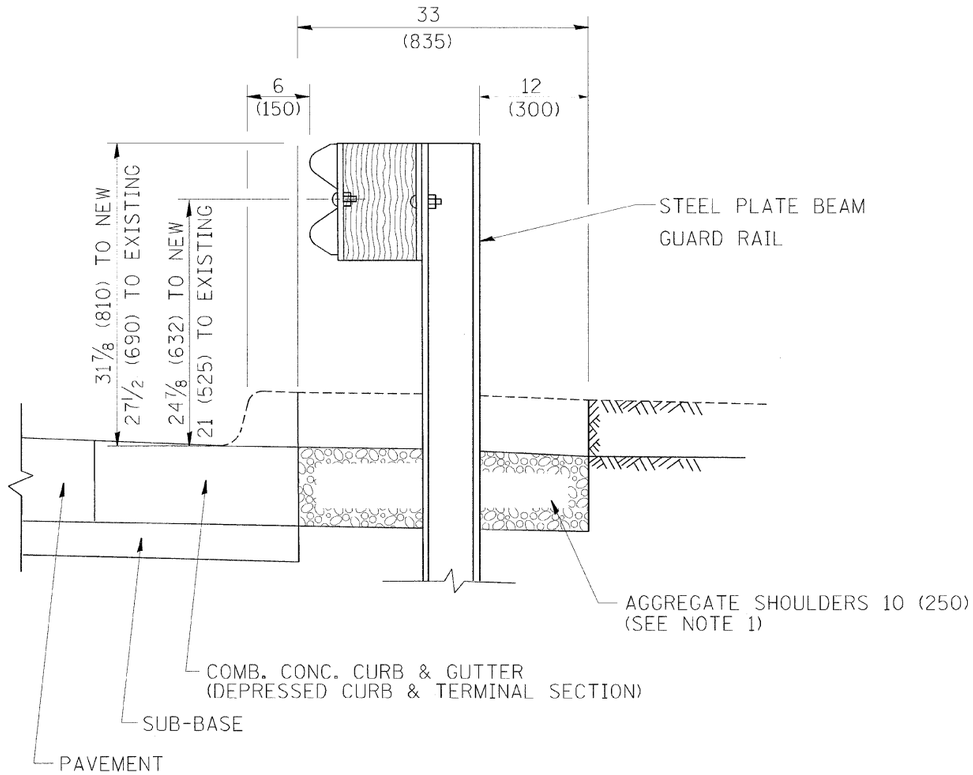


## SECTION A-A

NOTES:

1. THE AGGREGATE SHOULDER, 10" OR HMA SHOULDER, 6" (IF REQUIRED) SHALL EXTEND UNDER THE TRAFFIC BARRIER TERMINAL.
2. "EXISTING" GUARDRAIL REFERS TO CONNECTING TERMINAL SECTION TO GUARD RAILING PRIOR TO THE MIDWEST GUARDRAIL SYSTEM.
3. THE CONTRACTOR SHALL VERIFY THE TYPE/HEIGHT OF GUARDRAIL IN-PLACE BEFORE ORDERING THE NEW TERMINAL SECTION. COST INCLUDED WITH THE COST OF THE TERMINAL. THE TERMINAL SECTION HEIGHT TO BE PLACED MUST MATCH THE HEIGHT OF THE IN-PLACE GUARDRAIL.

## DETAILS FOR STEEL PLATE BEAM GUARD RAIL ADJACENT TO CURB AND GUTTER

[FOR ROADWAY SPEED 35 MPH (60 kmh) TO 45 MPH (70 kmh)]

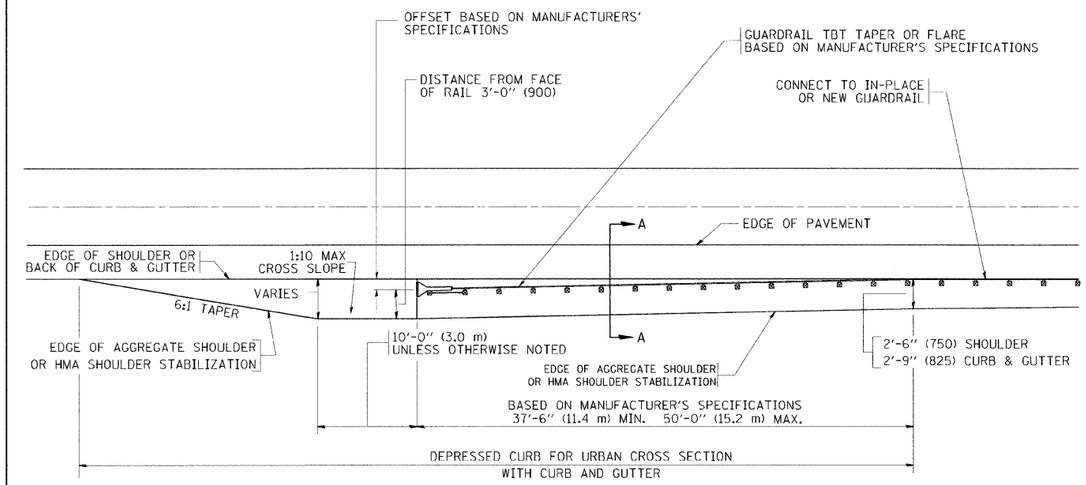


## DEPRESSED CURB AND GUTTER AND SHOULDER TREATMENT AT TBT TY. 1 SPL.

BASIS OF PAYMENT: HMA SHOULDERS 6 (150) (IF REQUIRED) WILL BE PAID FOR AT THE CONTRACT UNIT PRICE PER SQUARE YARD (SQUARE METER) FOR "HOT-MIX ASPHALT SHOULDERS 6" (150 mm)".

STEEL PLATE BEAM GUARD RAIL AND TRAFFIC BARRIER TERMINAL, OF THE TYPE SPECIFIED WILL BE PAID FOR SEPARATELY.

TBT = TRAFFIC BARRIER TERMINAL

ALL DIMENSIONS ARE IN INCHES (MILLIMETERS) UNLESS OTHERWISE SHOWN.

* 525/345 (US 20) ** McHENRY & KANE

| | | | | | |
|---|---|---|---|---|---|
| FILE NAME = c:\pw_work\PWIDOT\DRIVAKOSGN\d0108315\bd34.dgn | USER NAME = drivakosgn | DESIGNED - M. DE YONG | REVISED - E. GOMEZ 08-28-00 | STATE OF ILLINOIS DEPARTMENT OF TRANSPORTATION | DETAILS FOR DEPRESSED CURB & GUTTER AND SHOULDER TREATMENT AT TBT TY 1 SPL. |
| | | DRAWN - | REVISED - R. BORO 01-01-07 | | |
| | PLOT SCALE = 49.9999 ' / IN. | CHECKED - | REVISED - R. BORO 12-08-2008 | | |
| | PLOT DATE = 9/21/2009 | DATE - 09-22-90 | REVISED - R. BORO 09-14-2009 | | SCALE: NONE \| SHEET NO. 1 OF 1 SHEETS \| STA. TO STA. |

| F.A.P. RTE. | SECTION | COUNTY | TOTAL SHEETS | SHEET NO. |
|---|---|---|---|---|
| * | 2009-089 I | ** | 46 | 34 |
| | BD600-10 (BD 34) | CONTRACT NO. 60134 | | |
| FED. ROAD DIST. NO. 1 | ILLINOIS | FED. AID PROJECT | | |

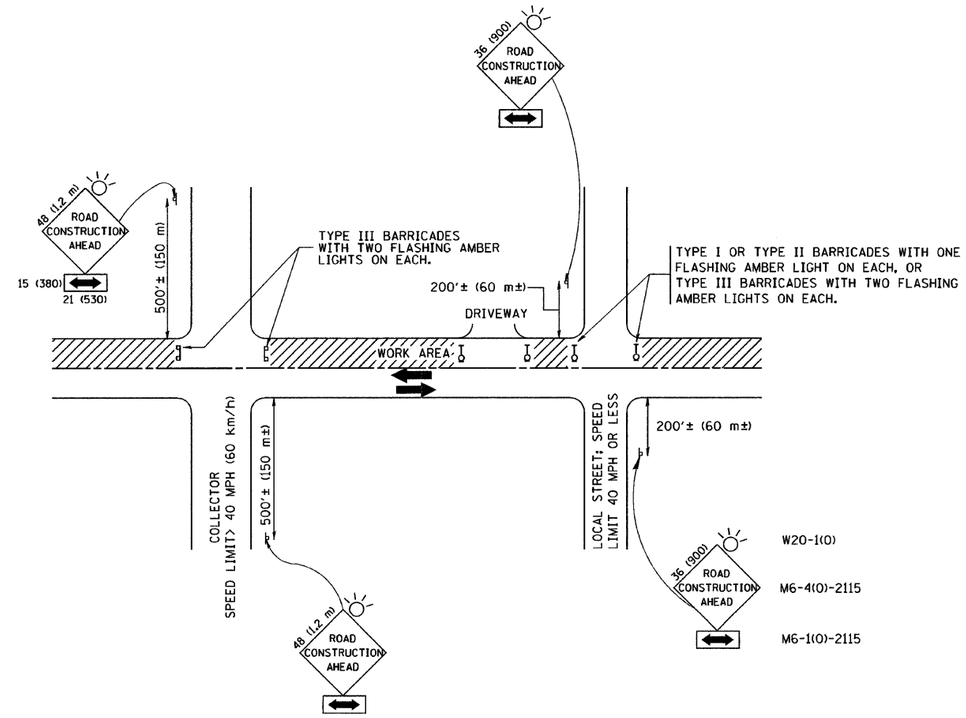


# TRAFFIC CONTROL AND PROTECTION FOR SIDE ROADS, INTERSECTIONS, AND DRIVEWAYS

## NOTES:

A. FOR NO LANE RESTRICTION ON THE SIDE ROAD OR DRIVEWAYS

1. SIDE ROAD WITH A SPEED LIMIT OF 40 MPH (60 km/h) OR LESS AS SHOWN ON THE DRAWING AND AS DIRECTED BY THE ENGINEER:

   a) ONE **ROAD CONSTRUCTION AHEAD** SIGN 36 x 36 (900x900) WITH A FLASHER AND FLAG MOUNTED ON IT APPROXIMATELY 200' (60 m) IN ADVANCE OF THE MAIN ROUTE.

   b) THE CLOSED PORTION OF THE MAIN ROUTE SHALL BE PROTECTED BY BLOCKING WITH TYPE I, TYPE II OR TYPE III BARRICADES, 1/3 OF THE CROSS SECTION OF THE CLOSED PORTION.

2. SIDE ROAD WITH A SPEED LIMIT GREATER THAN 40 MPH (60 km/h) AS SHOWN ON THE DRAWING AND AS DIRECTED BY THE ENGINEER:

   a) ONE **ROAD CONSTRUCTION AHEAD** SIGN 48 x 48 (1.2 m x 1.2 m) WITH A FLASHER MOUNTED ON IT APPROXIMATELY 500' (150 m) IN ADVANCE OF THE MAIN ROUTE.

   b) THE CLOSED PORTION OF THE MAIN ROUTE SHALL BE PROTECTED BY BLOCKING WITH TYPE III BARRICADES, 1/2 OF THE CROSS SECTION OF THE CLOSED PORTION.

3. WHEN THE SIDE ROAD LIES BETWEEN THE BEGINNING OF THE MAINLINE SIGNING AND THE WORK ZONE, A SINGLE HEADED ARROW (M6-1) SHALL BE USED IN LIEU OF THE DOUBLE HEADED ARROW (M6-4).

B. FOR A LANE CLOSURE ON A SIDE ROAD OR DRIVEWAY:

USE APPLICABLE PORTIONS OF THE TYPICAL APPLICATION OF TRAFFIC CONTROL DEVICES (STD. 701501, STD. 701606 OR THE APPROPRIATE STANDARD). THE SPACING OF SIGNS AND BARRICADES SHALL BE ADJUSTED FOR FIELD CONDITIONS AS DIRECTED BY THE ENGINEER. THE DIRECTIONAL ARROW SHALL BE COVERED OR REMOVED WHEN NO LONGER CONSISTENT WITH THE SIDE ROAD LANE CLOSURE.

C. ADVANCE WARNING SIGNS ARE TO BE OMITTED ON DRIVEWAY UNLESS OTHERWISE NOTED.

D. THE TRAFFIC CONTROL AND PROTECTION FOR SIDE ROADS, INTERSECTIONS, AND DRIVEWAYS SHALL BE INCIDENTAL TO THE COST OF SPECIFIED TRAFFIC CONTROL STANDARDS OR ITEMS.

All dimensions are in millimeters (inches) unless otherwise shown.

| | | | | | | | | | | |
|---|---|---|---|---|---|---|---|---|---|---|
| FILE NAME = W:\diststd\22x34\tc10.dgn | USER NAME = gaglionobt | DESIGNED - LHA | REVISED - J. OBERLE 10-18-95 | STATE OF ILLINOIS DEPARTMENT OF TRANSPORTATION | TRAFFIC CONTROL AND PROTECTION FOR SIDE ROADS, INTERSECTIONS, AND DRIVEWAYS | F.A.P. RTE. | SECTION | COUNTY | TOTAL SHEETS | SHEET NO. |
| | | DRAWN - | REVISED - A. HOUSEH 03-06-96 | | | * | 2009-089 I | ** | 46 | 35 |
| | PLOT SCALE = 50.000 ' / IN. | CHECKED - | REVISED - A. HOUSEH 10-15-96 | | | TC-10 | | CONTRACT NO. 60134 | | |
| | PLOT DATE = 1/4/2008 | DATE - 06-89 | REVISED -T. RAMMACHER 01-06-00 | | SCALE: NONE / SHEET NO. 1 OF 1 SHEETS / STA. TO STA. | FED. ROAD DIST. NO. 1 | ILLINOIS | FED. AID PROJECT | | |

## PARTIAL RAMP CLOSURE DETAILS

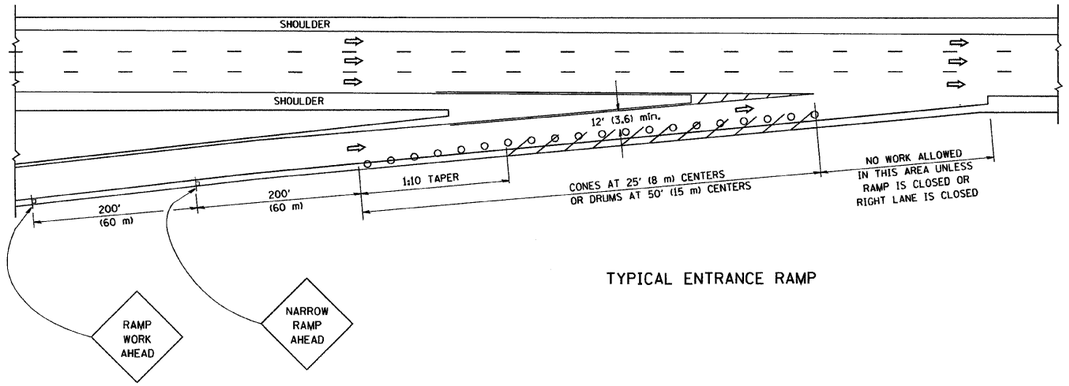


TYPICAL ENTRANCE RAMP

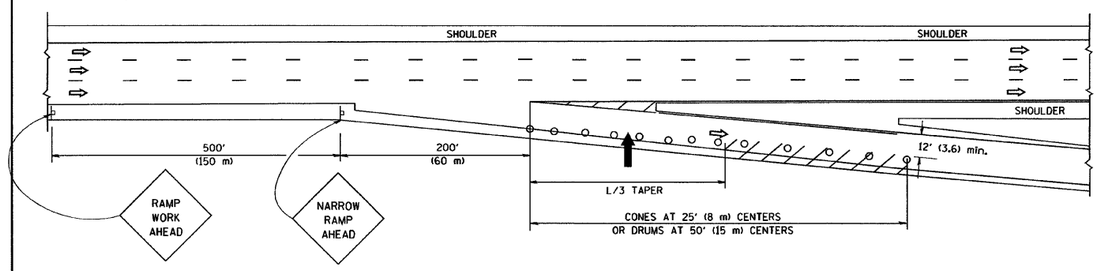


TYPICAL EXIT RAMP

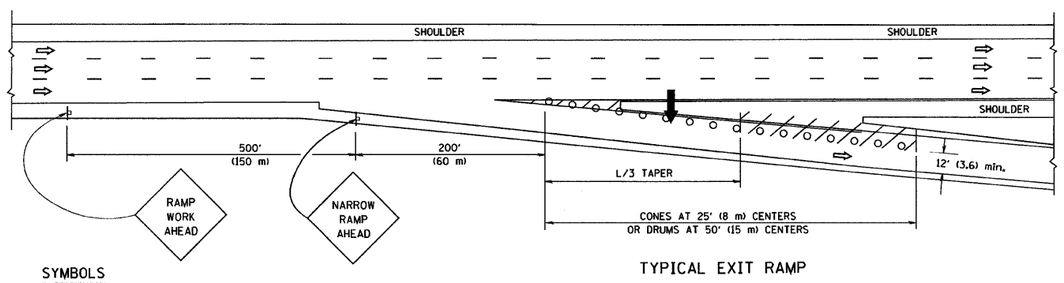


TYPICAL EXIT RAMP

## SHOULDER CLOSURE DETAILS

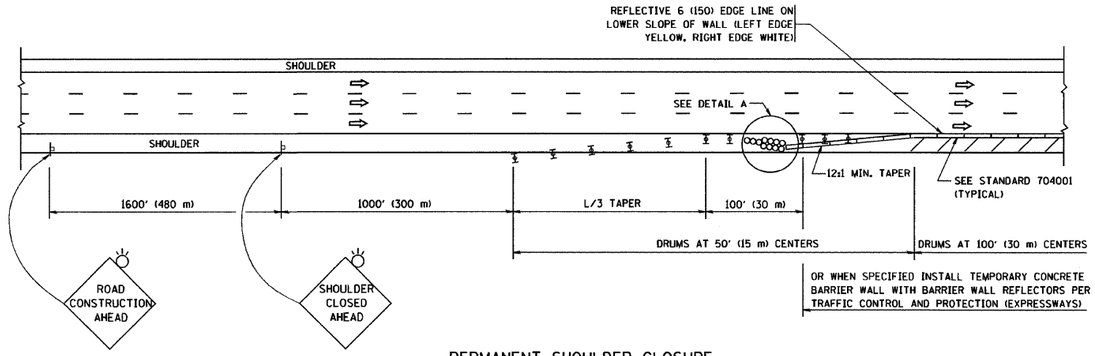


PERMANENT SHOULDER CLOSURE

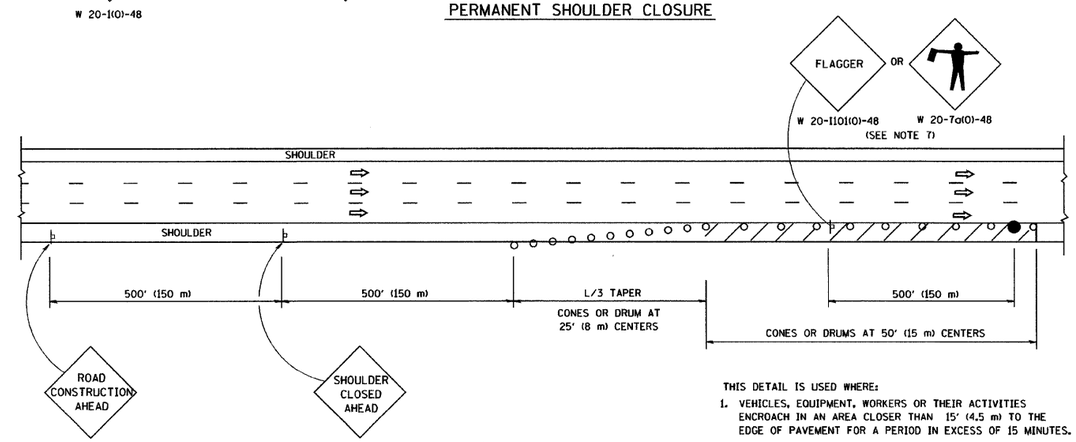


THIS DETAIL IS USED WHERE:

1. VEHICLES, EQUIPMENT, WORKERS OR THEIR ACTIVITIES ENCROACH IN AN AREA CLOSER THAN 15' (4.5 m) TO THE EDGE OF PAVEMENT FOR A PERIOD IN EXCESS OF 15 MINUTES.

DAYTIME SHOULDER CLOSURE

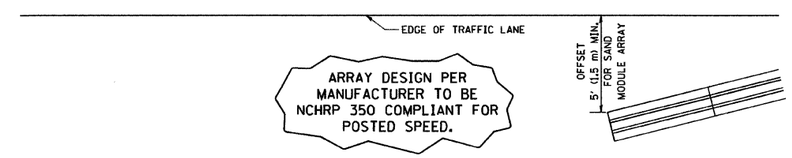


DETAIL "A"
IMPACT ATTENTUATOR, TEMPORARY
(SEE NOTE 5)

ALL DIMENSIONS ARE IN INCHES (MILLIMETERS) UNLESS OTHERWISE SHOWN.

## SYMBOLS

- ARROWBOARD
- WORK AREA
- SIGN ON PORTABLE OR PERMANENT SUPPORT
- FLAGGER WITH CONTROL SIGN
- TYPE II BARRICADE, DRUM OR VERTICAL BARRICADE WITH STEADY BURN MONO-DIRECTIONAL LIGHT
- CONE, DRUM OR BARRICADE

## GENERAL NOTES

1. THE "L" DISTANCE EQUALS:

| SPEED LIMIT | FORMULAS | |
|---|---|---|
| 45 mph (80 km/h) OR GREATER: | METRIC | ENGLISH |
| | L=0.65(W)(S) | L=(W)(S) |

W = WIDTH OF OFFSET IN FEET (METERS)
S = NORMAL POSTED SPEED MPH (KM/H)

2. PLASTIC DRUMS WITH HIGH PERFORMANCE REFLECTIVE SHEETING AND STEADY BURNING LIGHTS ARE REQUIRED FOR ALL NIGHTTIME CLOSURES.
3. ALL SIGNS SHALL BE POST MOUNTED IF THE CLOSURE TIME EXCEEDS FOUR DAYS.
4. FLASHING LIGHTS SHALL BE USED DURING THE HOURS OF DARKNESS AND SHALL BE INSTALLED ABOVE THE FIRST TWO SETS OF SIGNS.
5. THE IMPACT ATTENTUATOR, TEMPORARY IS NOT REQUIRED WHEN THE TEMPORARY CONCRETE BARRIER WALL IS PROTECTED BY OR IS TIED INTO THE EXISTING GUARDRAIL. IF OFFSET IS LESS THAN 5 FEET USE "TRAFFIC BARRIER TERMINAL, TYPE III, TEMPORARY" DEVICE TO MEET NCHRP350 FOR POSTED SPEED.
6. AUTHORIZATION FROM THE DISTRICT'S BUREAU OF TRAFFIC IS REQUIRED FOR ALL FREEWAY CLOSURES.
7. THE FLAGGER AND FLAGGER SIGN ARE REQUIRED AT THE ABOVE WORK SITES WHEN:
   a. FOUR OR MORE WORK VEHICLES ENTER THE TRAFFIC LANES IN A ONE HOUR PERIOD.
   b. THE WORK AVTIVITY REQUIRES FREQUENT ENCROACHMENT INTO THE LANE OPEN TO TRAFFIC.

   THE FLAGGER SHALL BE STATIONED APPROXIMATELY 100' (30 m) TO 200' (60 m) IN ADVANCE OF THE WORKERS.

* 525/345 (US 20) ** McHENRY & KANE

| | | | | | |
|---|---|---|---|---|---|
| FILE NAME = Ws\diststd\22x34\tc17.dgn | USER NAME = gaglianobt | DESIGNED - | REVISED - J.A.F. 12-02 | STATE OF ILLINOIS DEPARTMENT OF TRANSPORTATION | TRAFFIC CONTROL DETAILS FOR FREEWAY SHOULDER CLOSURES AND PARTIAL RAMP CLOSURES |
| | | DRAWN - D.W.S. | REVISED - 04-03 | | |
| | PLOT SCALE = 50.0000 ' / IN. | CHECKED - | REVISED - J.A.F. 12-06 | | |
| | PLOT DATE = 1/4/2008 | DATE - 11-96 | REVISED - S.P.B. 01-07 | | SCALE: NONE / SHEET NO. 1 OF 1 SHEETS / STA. TO STA. |

| F.A.P. RTE. | SECTION | COUNTY | TOTAL SHEETS | SHEET NO. |
|---|---|---|---|---|
| * | 2009-089 I | ** | 46 | 36 |
| | TC-17 | CONTRACT NO. 60I34 | | |
| FED. ROAD DIST. NO. 1 | ILLINOIS | FED. AID PROJECT | | |

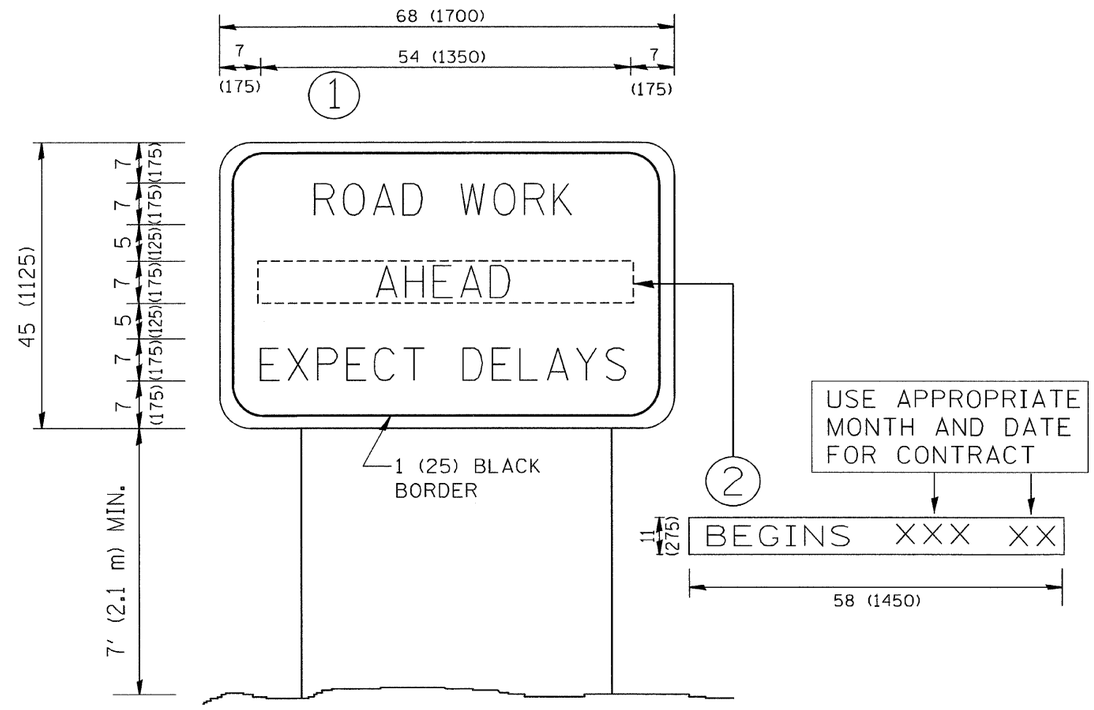


## NOTES:

1. USE BLACK LETTERING ON ORANGE BACKGROUND.
2. ERECT SIGNS IN ADVANCE OF THE LOCATION FOR THE "ROAD CONSTRUCTION AHEAD" SIGN AT LOCATIONS AS DIRECTED BY THE ENGINEER.
3. ERECT SIGN 1 WITH INSTALLED PANEL 2 ONE WEEK PRIOR TO THE START OF CONSTRUCTION.
4. REMOVE PANEL 2 SOON AFTER THE START OF CONSTRUCTION.
5. SEE SPECIAL PROVISION FOR "TEMPORARY INFORMATION SIGNING" FOR ADDITIONAL INFORMATION.
6. ONE SIGN ASSEMBLY EQUALS 25.70 SQ. FT. (2.3 SQ. M.)
7. SHALL BE PAID FOR AS TEMPORARY INFORMATION SIGNING.

ALL DIMENSIONS ARE IN INCHES (MILLIMETERS) UNLESS OTHERWISE SHOWN.

* 525/345 (US 20) ** McHENRY & KANE

| | | | | | | | | | | |
|---|---|---|---|---|---|---|---|---|---|---|
| FILE NAME = W:\diststd\22x34\tc22.dgn | USER NAME = gaglianobt | DESIGNED - | REVISED - R. MIRS 09-15-97 | STATE OF ILLINOIS DEPARTMENT OF TRANSPORTATION | ARTERIAL ROAD INFORMATION SIGN | F.A.P. RTE. | SECTION | COUNTY | TOTAL SHEETS | SHEET NO. |
| | | DRAWN - | REVISED - R. MIRS 12-11-97 | | | * | 2009-089 I | ** | 46 | 37 |
| | PLOT SCALE = 50.000 ' / IN. | CHECKED - | REVISED -T. RAMMACHER 02-02-99 | | | TC-22 | | CONTRACT NO. 60134 | | |
| | PLOT DATE = 1/4/2008 | DATE - | REVISED - C. JUCIUS 01-31-07 | | SCALE: NONE / SHEET NO. 1 OF 1 SHEETS / STA. / TO STA. | FED. ROAD DIST. NO. 1 | ILLINOIS | FED. AID PROJECT | | |

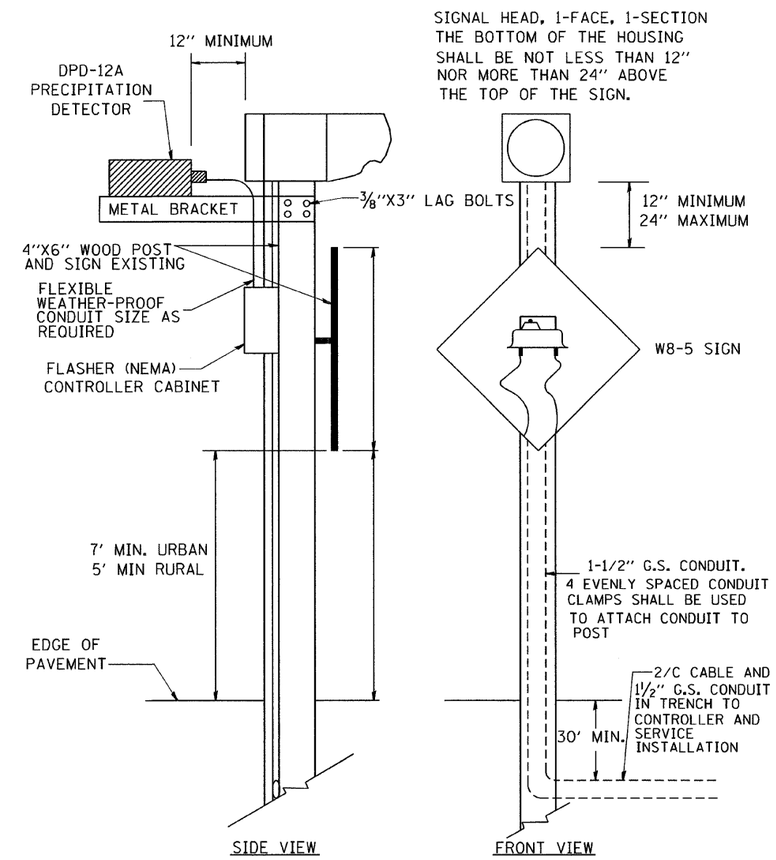


## POST MOUNTED FLASHING BEACON WITH PRECIPITATION DETECTOR

(NOT TO SCALE)

* 525/345 (US 20) ** McHENRY & KANE

| | | | | | | | | | |
|---|---|---|---|---|---|---|---|---|---|
| FILE NAME = W:\diststd\22x34\ts04.dgn | USER NAME = gaglionobt | DESIGNED - | REVISED - 01-01-07 | STATE OF ILLINOIS DEPARTMENT OF TRANSPORTATION | POST MOUNTED FLASHING BEACON WITH PRECIPITATION DETECTOR | F.A.P. RTE. | SECTION | COUNTY | TOTAL SHEETS / SHEET NO. |
| | | DRAWN - | REVISED - | | | * | 2009-089 I | ** | 46 / 38 |
| | PLOT SCALE = 50.0000 '/ IN. | CHECKED - | REVISED - | | | | TS-04 | CONTRACT NO. 60I34 | |
| | PLOT DATE = 1/4/2008 | DATE - | REVISED - | | SCALE: NONE / SHEET NO. 1 OF 3 SHEETS / STA. TO STA. | FED. ROAD DIST. NO. 1 | ILLINOIS | FED. AID PROJECT | |

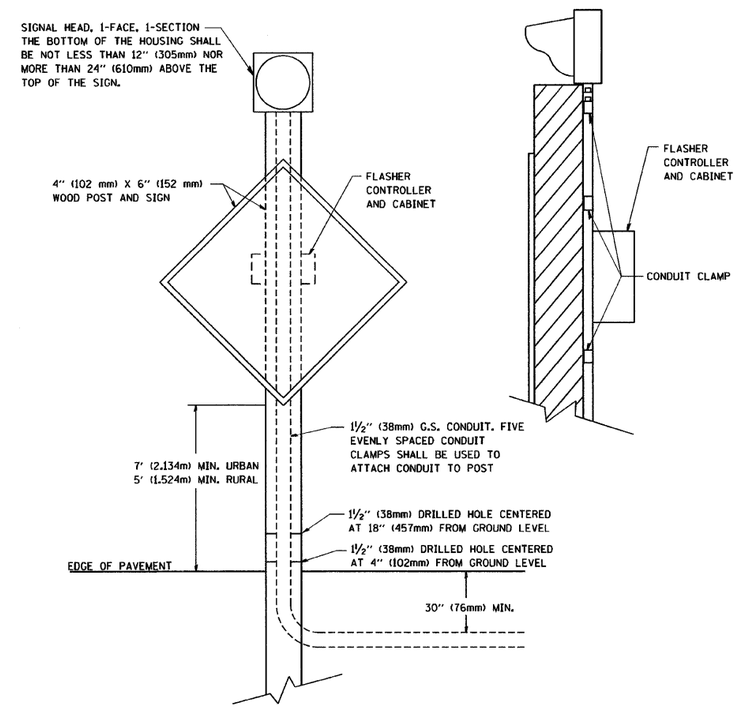


# POST MOUNTED FLASHING BEACON WITH CONTROLLER AND CABINET

* 525/345 (US 20) ** McHENRY & KANE

| | | | | | | | | | |
|---|---|---|---|---|---|---|---|---|---|
| FILE NAME = W:\diststd\22x34\ts04.dgn | USER NAME = gaglianobt | DESIGNED - | REVISED - 01-01-07 | STATE OF ILLINOIS DEPARTMENT OF TRANSPORTATION | POST MOUNTED FLASHING BEACON WITH CONTROLLER AND CABINET | F.A.P. RTE. | SECTION | COUNTY | TOTAL SHEETS / SHEET NO. |
| | | DRAWN - | REVISED - | | | * | 2009-089 I | ** | 46 / 39 |
| | PLOT SCALE = 50.0000 '/ IN. | CHECKED - | REVISED - | | | TS-04 | | CONTRACT NO. 60I34 | |
| | PLOT DATE = 1/4/2008 | DATE - | REVISED - | | SCALE: NONE / SHEET NO. 2 OF 3 SHEETS / STA. TO STA. | FED. ROAD DIST. NO. 1 | ILLINOIS | FED. AID PROJECT | |

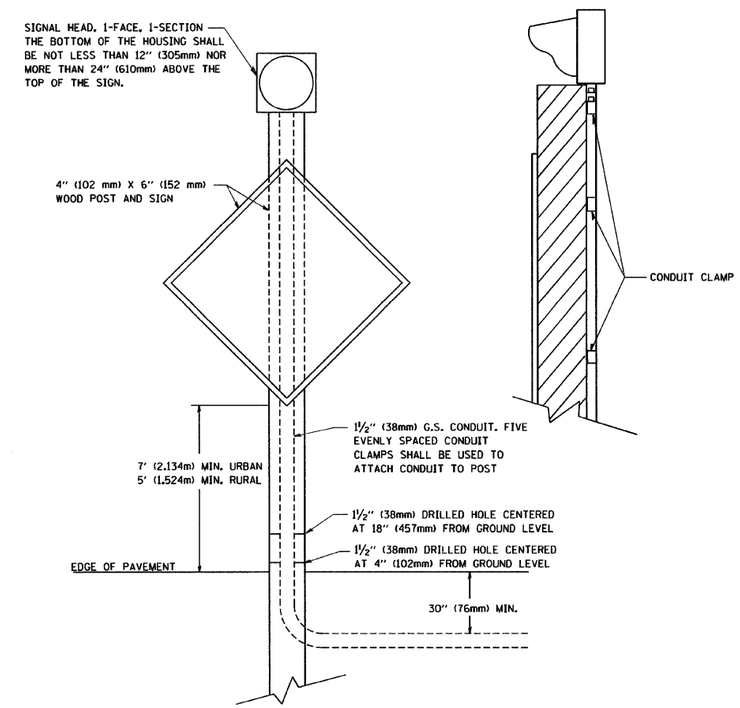


POST MOUNTED FLASHING BEACON

* 525/345 (US 20) ** McHENRY & KANE

| | | | | | | | | | | |
|---|---|---|---|---|---|---|---|---|---|---|
| FILE NAME = W:\diststd\22x34\ts04.dgn | USER NAME = gaglianobt | DESIGNED - | REVISED - 01-01-07 | STATE OF ILLINOIS DEPARTMENT OF TRANSPORTATION | POST MOUNTED FLASHING BEACON | F.A.P. RTE. | SECTION | COUNTY | TOTAL SHEETS | SHEET NO. |
| | | DRAWN - | REVISED - | | | * | 2009-089 I | ** | 46 | 40 |
| | PLOT SCALE = 50.0000 '/ IN. | CHECKED - | REVISED - | | | | TS-04 | CONTRACT NO. 60I34 | | |
| | PLOT DATE = 1/4/2008 | DATE - | REVISED - | | SCALE: NONE / SHEET NO. 3 OF 3 SHEETS / STA. TO STA. | FED. ROAD DIST. NO. 1 | ILLINOIS | FED. AID PROJECT | | |

## LOOP DETECTOR NOTES

1. EACH PAIR OF LOOP WIRES SHALL BE PLACED IN A SEPARATE EMPTY COILABLE NONMETALLIC CONDUIT FROM THE EDGE OF PAVEMENT TO THE HANDHOLE. SPACING BETWEEN THE HOLES DRILLED IN THE PAVEMENT SHALL NOT BE LESS THAN 6" (150 mm). EMPTY COILABLE NONMETALLIC CONDUIT SHALL BE INCLUDED IN THE COST OF THE LOOP WIRE.

2. THE NUMBER OF LOOP TURNS SHALL BE AS RECOMMENDED BY THE AMPLIFIER MANUFACTURER. ALL ADJACENT SIDES OF THE LOOPS SHALL BE INSTALLED IN SUCH A WAY THAT THE CURRENT FLOW IS IN THE SAME DIRECTION TO REINFORCE ITS MAGNETIC FIELDS FOR SMALL VEHICLE DETECTION.

3. EACH LOOP LEAD-IN SHALL BE IDENTIFIED AND PERMANENTLY TAGGED IN THE HANDHOLE. EACH LEAD-IN CABLE TAG SHALL INDICATE THE LOCATION OF THE LOOP, LOOP ROTATION (CLOCKWISE/COUNTERCLOCKWISE), LOOP LEAD-IN DIRECTION (IN OR OUT), LOOP CABLE NUMBER AND LOCATION IN CABINET, AND NUMBER OF TURNS IN THE DETECTOR LOOPS IN WATER PROOF INK AS INDICATED ON THE DISTRICT 1 STANDARD TRAFFIC SIGNAL DESIGN DETAIL. THE CONTRACTOR SHALL MARK LOOP LOCATIONS ON RECORD DRAWINGS AND PRESENT TO THE ENGINEER AFTER FINAL INSPECTION. LOOPS SHALL BE MARKED BY LANE AND LOOP NUMBER. SEE DETAIL BELOW.

4. ALL LOOP CABLE SHALL BE FASTENED WITH PLASTIC TIE WRAP TO THE HANDHOLE HOOKS.

5. IN ASPHALT PAVEMENT, LOOPS SHOULD BE PLACED IN THE BINDER AND DIVEHOLES MARKED AT THE CURB WITH A SAW-CUT. THE SAW-CUT SHALL BE CUT IN ACCORDANCE WITH LOCAL AND E.P.A. DUST CONTROL REQUIREMENTS. DETECTOR LOOP(S) SHALL NOT BE INSTALLED IN WET CONDITIONS AND THE SAW-CUTS MUST BE FREE OF DEBRIS AND RESIDUE SUCH AS DUST AND WATER WHICH IS TO BE ACHIEVED BY THE USE OF COMPRESSED AIR, WIRE BRUSHING AND HEAT DRYING ACCORDING TO SEALANT MANUFACTURER REQUIREMENTS. THE DETECTOR WIRE SHALL BE HELD IN PLACE BY THE USE OF FORM WEDGES. WEDGES SHALL BE SPACED NO MORE THAN 18" (450 mm) APART.

6. LOOP SPLICES SHALL BE SOLDERED USING A SOLDERING IRON. BLOW TORCHES OR OTHER DEVICES WHICH OXIDIZE COPPER CABLE SHALL NOT BE ALLOWED FOR SOLDERING OPERATIONS. SEE DETAIL BELOW RIGHT.

7. PREFORMED DETECTOR LOOPS SHALL BE USED, AS SHOWN ON THE PLANS, WHERE NEW CONCRETE PAVEMENT IS PROPOSED. THE INSTALLATION OF PREFORMED LOOPS SHALL BE IN ACCORDANCE WITH THE DISTRICT 1 SPECIFICATIONS OR AS DIRECTED BY THE ENGINEER.

### LOOP LEAD-IN CABLE TAG

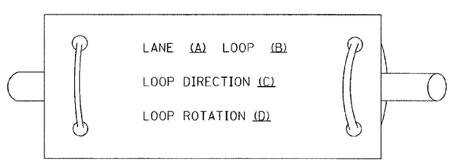


A. LANE 1 IS THE LANE CLOSEST TO THE CENTERLINE OF THE ROADWAY

B. LOOP #1 IS THE LOOP IN THE LANE CLOSEST TO THE INTERSECTION.

C. LABEL LOOP CABLE "IN" OR LOOP CABLE "OUT".

D. LABEL LOOP CABLE CLOCKWISE OR LOOP CABLE COUNTERCLOCKWISE.

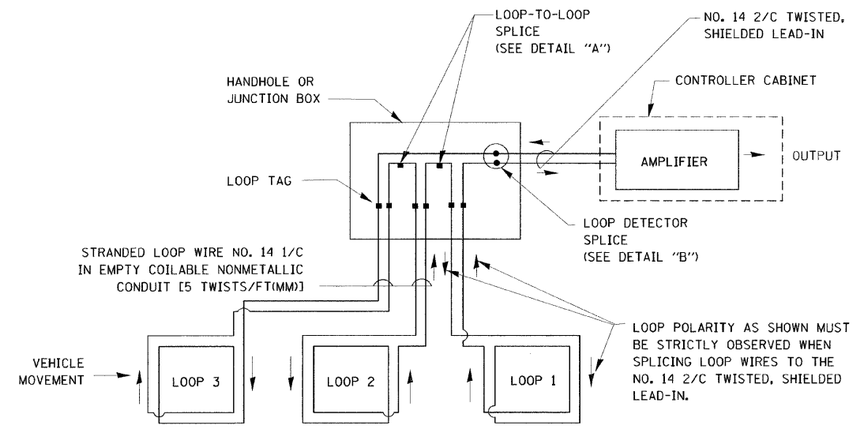


### DETECTOR LOOP WIRING SCHEMATIC

- LOOPS SHALL BE SPLICED IN SERIES.
- SAW-CUTS SHALL BE A MINIMUM WIDTH OF 5/16" (8 mm).
- SAW-CUT DEPTHS SHALL BE 3" (75 mm). IF IN CONCRETE, THE SAW-CUT DEPTH SHALL BE TO THE TOP OF THE REINFORCEMENT.
- LOOP CORNERS SHALL BE DRILLED WITH A 2" (50 mm) DIAMETER CORE.

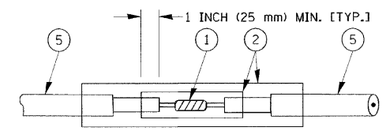


DETAIL "A"
LOOP-TO-LOOP SPLICE

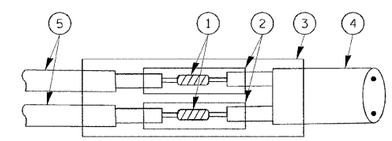


DETAIL "B"
LOOP-TO-CONTROLLER SPLICE

### TYPE I LOOP

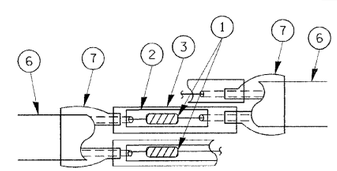


DETAIL "A"
LOOP-TO-LOOP SPLICE

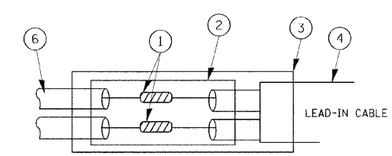


DETAIL "B"
LOOP-TO-CONTROLLER SPLICE

### PRE-FORMED LOOP

### LOOP DETECTOR SPLICE

1. WESTERN UNION SPLICE SOLDERED WITH ROSIN CORE FLUX. ALL EXPOSED SURFACES OF THE SOLDER SHALL BE SMOOTH.
2. WCSMW 30/100 HEAT SHRINK TUBE, MINIMUM LENGTH 3" (75 mm), UNDERWATER GRADE.
3. WCS 200/750 HEAT SHRINK TUBE, MINIMUM LENGHT 6" (150 mm), UNDERWATER GRADE.
4. NO. 14 2/C TWISTED, SHIELDED CABLE.
5. LOOP CONDUCTOR WITH FLEXIBLE PLASTIC TUBE.
6. PRE-FORMED LOOP
7. XL POLYOLEFIN 2 CONDUCTOR BREAKOUT SEALS. TYCO CBR-2 OR APPROVED EQUAL

* 525/345 (US 20) ** McHENRY & KANE

| | | | | | | | | | |
|---|---|---|---|---|---|---|---|---|---|
| FILE NAME = c:\pw_work\PWIDOT\BAUERDL\d0108315\ts05.dgn | USER NAME = bauerdl | DESIGNED - DAD | REVISED - | STATE OF ILLINOIS DEPARTMENT OF TRANSPORTATION | DISTRICT ONE STANDARD TRAFFIC SIGNAL DESIGN DETAILS | F.A.P. RTE. | SECTION | COUNTY | TOTAL SHEETS / SHEET NO. |
| | | DRAWN - BCK | REVISED - | | | * | 2009-089 I | ** | 46 / 41 |
| | PLOT SCALE = 50.0000 ' / IN. | CHECKED - DAD | REVISED - | | | | TS-05 | CONTRACT NO. 60I34 | |
| | PLOT DATE = 11/4/2009 | DATE - 10-28-09 | REVISED - | | SCALE: NONE / SHEET NO. 1 OF 6 SHEETS / STA. TO STA. | FED. ROAD DIST. NO. 1 | ILLINOIS | FED. AID PROJECT | |

## TRAFFIC SIGNAL MAST ARM AND SIGNAL POST

MAST ARM MOUNTED SIGNALS IN EXISTING, PROPOSED OR FUTURE SIDEWALK/BICYCLE PATH AREA. INTERSECTION SHOWN WITH PEDESTRIAN SIGNALS AND PEDESTRIAN PUSHBUTTON DETECTORS.

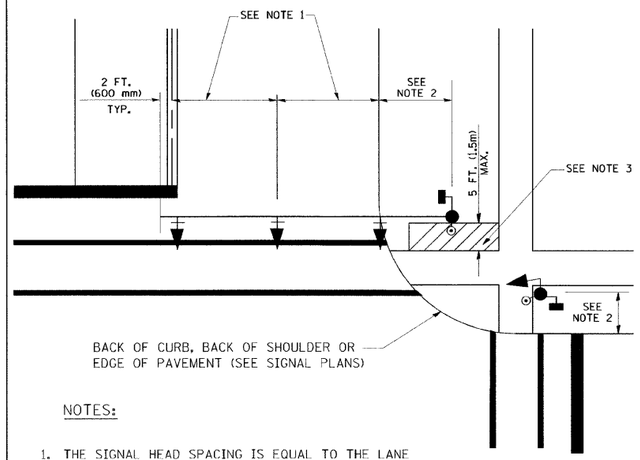


NOTES:

1. THE SIGNAL HEAD SPACING IS EQUAL TO THE LANE WIDTH OR AS SHOWN ON THE TRAFFIC SIGNAL PLAN.
2. REFER TO THE TRAFFIC SIGNAL EQUIPMENT OFFSET TABLE.
3. PROVIDE A LEVEL ALL-WEATHER SURFACE (CONCRETE SIDEWALK, ASPHALT BICYCLE PATH SURFACE OR MATCHING MATERIAL TO THE ADJACENT SURFACE) UP TO THE MAST ARM SHAFT OR THE SIGNAL POST.
4. THE FACE OF THE PEDESTRIAN PUSHBUTTON SHALL BE PARALLEL TO THE CROSSWALK TO BE USED.
5. THE LOCATIONS AND INSTALLATION OF PEDESTRIAN SIGNAL HEADS AND PEDESTRIAN PUSHBUTTONS SHALL MEET THE REQUIREMENTS OF THE MUTCD AND INFORMATION FOUND IN THE "AMERICANS WITH DISABILITIES ACT ACCESSIBILITY GUIDELINES FOR BUILDINGS AND FACILITIES."

## PEDESTRIAN SIGNAL POST AND PEDESTRIAN PUSH BUTTON POST

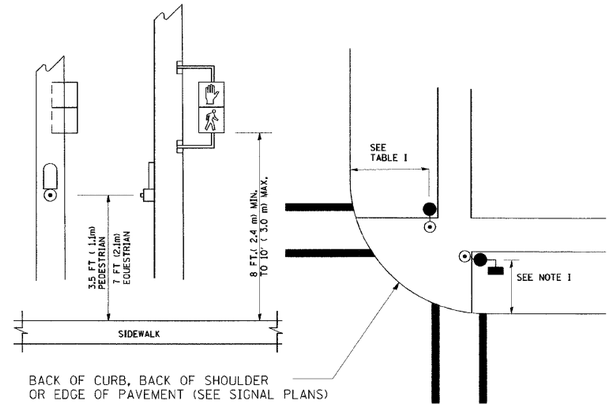


NOTES:

1. REFER TO THE TRAFFIC SIGNAL EQUIPMENT OFFSET TABLE.
2. PROVIDE A LEVEL ALL-WEATHER SURFACE (CONCRETE SIDEWALK, ASPHALT BICYCLE PATH SURFACE OR MATCHING MATERIAL TO THE ADJACENT SURFACE) UP TO THE PEDESTRIAN SIGNAL POST OR THE PEDESTRIAN PUSH BUTTON POST.
3. THE FACE OF THE PEDESTRIAN PUSHBUTTON SHALL BE PARALLEL TO THE CROSSWALK TO BE USED.
4. THE LOCATIONS AND INSTALLATION OF PEDESTRIAN SIGNAL HEADS AND PEDESTRIAN PUSHBUTTONS SHALL MEET THE REQUIREMENTS OF THE MUTCD AND INFORMATION FOUND IN THE "AMERICANS WITH DISABILITIES ACT ACCESSIBILITY GUIDELINES FOR BUILDINGS AND FACILITIES."

## RECOMMENDED PUSHBUTTON LOCATIONS

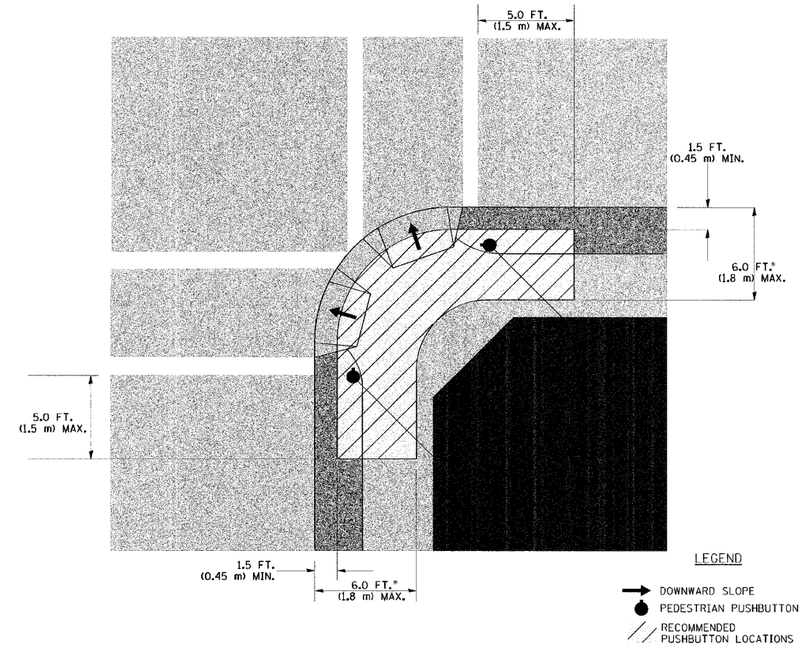


* WHERE THERE ARE CONSTRAINTS THAT MAKE IT IMPRACTICAL TO PLACE THE PEDESTRIAN PUSHBUTTON BETWEEN 1.5 FT (0.45 m) AND 6 FT ( 1.8 m) FROM THE EDGE OF THE CURB, SHOULDER, OR PAVEMENT, IT SHOULD NOT BE FURTHER THAN 10 FT (3 m) FROM THE EDGE OF CURB, SHOULDER, OR PAVEMENT.

** WHERE THERE ARE CONSTRAINTS ON A PARTICULAR CORNER THAT MAKE IT IMPRACTICAL TO PROVIDE THE 10 FT (3 m) SEPERATION BETWEEN THE TWO PEDESTRIAN PUSHBUTTONS, THE PUSHBUTTONS MAY BE PLACED CLOSER TOGETHER OR ON THE SAME POLE.

## NOTES:

1. PEDESTRIAN SIGNAL HEADS SHALL BE MOUNTED WITH THE BOTTOM OF THE SIGNAL HOUSING INCLUDING BRACKETS NOT LESS THAN 8 FT (2.4 m) OR MORE THAN 10 FT (3 m) ABOVE SIDEWALK LEVEL, AND SHALL BE POSITIONED AND ADJUSTED TO PROVIDE MAXIMUM VISIBILITY AT THE BEGINNING OF THE CONTROLLED CROSSWALK.
2. THE BOTTOM OF THE SIGNAL HOUSING (INCLUDING BRACKETS) OF A VEHICULAR SIGNAL FACE THAT IS NOT LOCATED OVER A HIGHWAY SHALL BE AT LEAST 8 FT (2.4 m) BUT NOT MORE THAN 19 FT (5.8 m) ABOVE THE SIDEWALK OR, IF THERE IS NO SIDEWALK, ABOVE THE PAVEMENT GRADE AT THE CENTER OF THE ROADWAY.
3. THE BOTTOM OF THE SIGNAL HOUSING AND ANY RELATED ATTACHMENTS TO A SIGNAL FACE LOCATED OVER ANY PORTION OF A HIGHWAY SHALL BE ACCORDING TO CURRENT STATE STANDARDS 877001, 877002, 877006, 877011 AND 877012 WITH A MINIMUM OF 16 FT (5.0 m) AND A MAXIMUM OF 18 FT. (5.5 m) FROM THE HIGHEST POINT OF PAVEMENT.
4. THE BOTTOM OF THE TEMPORARY SPAN WIRE MOUNTED SIGNAL HOUSING AND ANY RELATED ATTACHMENTS TO A SIGNAL FACE LOCATED OVER ANY PORTION OF A HIGHWAY SHALL BE ACCORDING TO CURRENT STATE STANDARD 880001 WITH A MINIMUM OF 17 FT (5.18 m) FROM THE HIGHEST POINT OF PAVEMENT.
5. THE TOP OF THE SIGNAL HOUSING OF A SIGNAL FACE LOCATED OVER ANY PORTION OF A HIGHWAY SHALL NOT BE MORE THAN 25.6 FT (7.8 m) ABOVE THE PAVEMENT.

## TRAFFIC SIGNAL EQUIPMENT OFFSET

| TRAFFIC SIGNAL EQUIPMENT | COMBINATION CONCRETE CURB AND GUTTER (MINIMUM DISTANCE FROM BACK OF CURB TO CENTERLINE OF FOUNDATION) | SHOULDER/NON-CURBED AREA (MINIMUM DISTANCE FROM EDGE OF PAVEMENT TO CENTERLINE OF FOUNDATION) |
|---|---|---|
| TRAFFIC SIGNAL MAST ARM POLE | 6 FT (1.8m) | SHOULDER WIDTH + 2 FT (0.6m), MINIMUM 10 FT (3.0m) |
| TRAFFIC SIGNAL POST | 4 FT (1.2m) | SHOULDER WIDTH + 2 FT (0.6m), MINIMUM 10 FT (3.0m) |
| PEDESTRIAN SIGNAL POST | 4 FT (1.2m) | SHOULDER WIDTH + 2 FT (0.6m), MINIMUM 10 FT (3.0m) |
| PEDESTRIAN PUSHBUTTON POST | 4 FT (1.2m) | SHOULDER WIDTH + 2 FT (0.6m), MINIMUM 10 FT (3.0m) |
| TEMPORARY WOOD POLE | 6 FT (1.8m) | SHOULDER WIDTH + 2 FT (0.6m), MINIMUM 10 FT (3.0m) |
| CONTROLLER CABINET | 6 FT (1.8m) MINIMUM DISTANCE SEE NOTE 2 | SHOULDER WIDTH + 6 FT (1.8m), MINIMUM 16 FT (4.9m) SEE NOTE 3. |
| SERVICE INSTALLATION, GROUND MOUNT | 6 FT (1.8m) MINIMUM DISTANCE SEE NOTE 2 | SHOULDER WIDTH + 6 FT (1.8m), MINIMUM 16 FT (4.9m) SEE NOTE 3. |

NOTES:

1. CONTACT THE "AREA TRAFFIC SIGNAL MAINTENANCE AND OPERATIONS ENGINEER" FOR ASSISTANCE IN LOCATING THE TRAFFIC SIGNAL EQUIPMENT WHEN THERE ARE CONFLICTS WITH DITCHES OR THE MINIMUM OFFSET DISTANCES CANNOT BE MET.
2. MINIMUM DISTANCE FROM THE BACK OF CURB TO THE ROADWAY SIDE OF THE FOUNDATION.
3. MINIMUM DISTANCE FROM THE EDGE OF PAVEMENT TO THE ROADWAY SIDE OF THE FOUNDATION.
4. ANY CHANGES TO THE OFFSETS OF THE FOUNDATIONS, FROM THE MINIMUM DISTANCES LISTED IN THE "TRAFFIC SIGNAL EQUIPMENT OFFSET" CHART AND THE TRAFFIC SIGNAL INSTALLATION PLAN, COULD EFFECT THE PLACEMENT OF THE SIGNAL HEADS, PEDESTRIAN SIGNAL HEADS AND THE PEDESTRIAN PUSHBUTTONS. THE SIGNAL HEAD PLACEMENT ON THE MAST ARMS SHALL REMAIN AS PER THE TRAFFIC SIGNAL INSTALLATION PLAN AND THE "TRAFFIC SIGNAL MAST ARM AND SIGNAL POST" DETAIL ABOVE. THE PROPOSED MAST ARM LENGTHS MAY NEED TO BE REVISED TO MEET THE ABOVE REQUIREMENTS. THE PEDESTRIAN SIGNAL HEADS AND PEDESTRIAN PUSHBUTTONS MUST MEET THE REQUIREMENTS UNDER THE DETAILS ON THIS SHEET.

* 525/345 (US 20) ** McHENRY & KANE

| | | | |
|---|---|---|---|
| FILE NAME = c:\pw_work\PWIDOT\BAUERDL\d2108315\ts05.dgn | USER NAME = bauerdl | DESIGNED - DAD | REVISED - |
| | | DRAWN - BCK | REVISED - |
| | PLOT SCALE = 50.0000 ' / IN. | CHECKED - DAD | REVISED - |
| | PLOT DATE = 11/4/2009 | DATE - 10-28-09 | REVISED - |

**STATE OF ILLINOIS**
**DEPARTMENT OF TRANSPORTATION**

**DISTRICT ONE**
**STANDARD TRAFFIC SIGNAL DESIGN DETAILS**

SCALE: NONE | SHEET NO. 2 OF 6 SHEETS | STA. | TO STA.

| F.A.P. RTE. | SECTION | COUNTY | TOTAL SHEETS | SHEET NO. |
|---|---|---|---|---|
| * | 2009-089 I | ** | 46 | 42 |
| | TS-05 | CONTRACT NO. 60134 | | |

FED. ROAD DIST. NO. 1 | ILLINOIS | FED. AID PROJECT

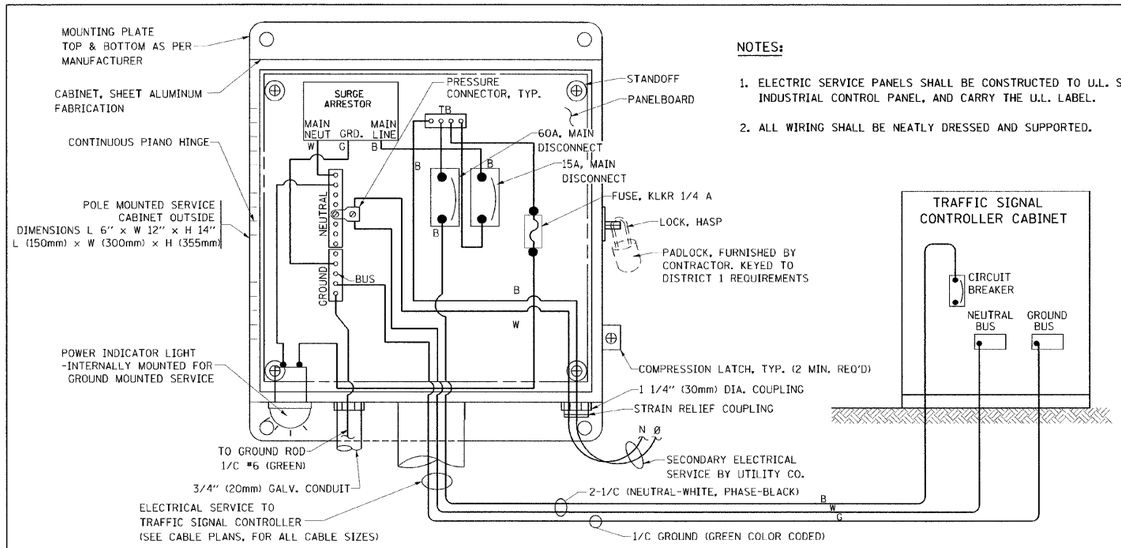


NOTES:

1. ELECTRIC SERVICE PANELS SHALL BE CONSTRUCTED TO U.L. STD 508, INDUSTRIAL CONTROL PANEL, AND CARRY THE U.L. LABEL.
2. ALL WIRING SHALL BE NEATLY DRESSED AND SUPPORTED.

## ELECTRICAL SERVICE – PANEL DIAGRAM (TYPICAL FOR POLE AND GROUND MOUNTED SERVICE)

## SERVICE INSTALLATION POLE MOUNT (SHOWN)

(NOT TO SCALE)

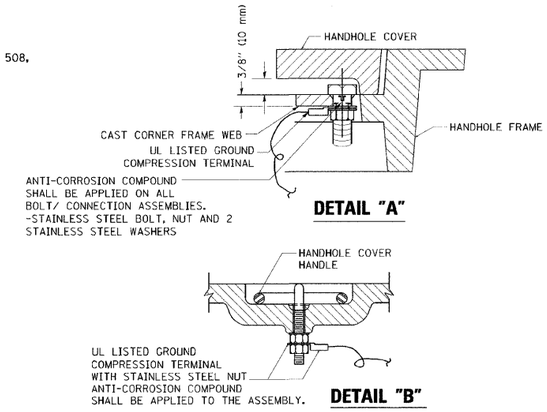


NOTES:

GROUNDING SYSTEM

1. THE GROUNDING SYSTEM SHALL CONSIST OF AN INSULATED CONDUCTOR TYPE XLP, NO. 6 A.W.G., STRANDED COPPER TO BE INSTALLED IN RACEWAYS. THE GROUNDING CABLE SHALL BE INSTALLED IN A CONTINUOUS MANNER AS SHOWN ON THE CABLE PLAN PROVIDED. ALL GROUNDING CONDUCTORS SHALL BE BONDED TO METAL ENCLOSURE (HANDHOLE, POST, MAST ARM, CONTROLLER, ETC.). GROUND ROD SHALL BE 3/4" DIA. x 10'-0" (20mm x 3.0m) LONG, COPPER CLAD. ONE GROUND ROD SHALL BE INSTALLED AT ALL POST FOUNDATIONS, POLE FOUNDATIONS, CONTROLLER CABINET FOUNDATION AND ELECTRICAL SERVICE INSTALLATION AS INDICATED ON THE CABLE PLAN. IF THERE ARE ANY SPECIAL CONDITIONS SUCH AS SUB-SURFACE CONDITIONS OR INSTALLATION PROBLEMS, THE RESIDENT ENGINEER SHALL BE NOTIFIED OR CONTACT THE BUREAU OF TRAFFIC, ILLINOIS DEPARTMENT OF TRANSPORTATION DISTRICT ONE AT (847) 705-4139.
2. THE NEUTRAL CONDUCTOR AND THE GROUND CONDUCTOR SHALL BE CONNECTED IN THE SERVICE INSTALLATION. AT NO OTHER POINT IN THE TRAFFIC SIGNAL SYSTEM SHALL THE NEUTRAL AND GROUND CONDUCTORS BE CONNECTED.
3. ALL EQUIPMENT GROUNDING CONDUCTORS SHALL TERMINATE AT THE GROUND BUS IN THE CONTROLLER CABINET.
4. THE CONTRACTOR SHALL PROVIDE A GROUND CABLE WITH CONNECTORS BETWEEN THE HANDHOLE COVER AND HANDHOLE FRAME.

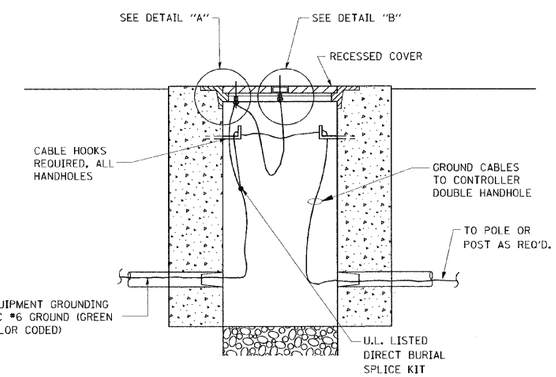


## HANDHOLE COVER & FRAME – GROUNDING DETAIL

(NOT TO SCALE)

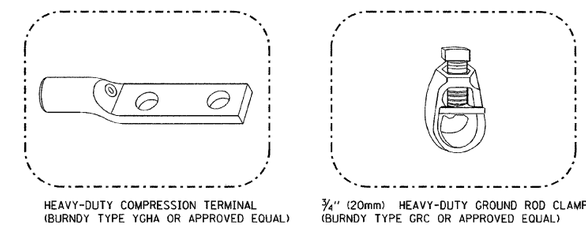


NOTES:

- ALL CLAMPS SHALL BE BRONZE OR COPPER, UL APPROVED.
- GROUND CABLE SHALL BE LOOPED OVER HOOKS IN THE HANDHOLES
  6.5' (2.0m) SLACK SHALL BE PROVIDED IN SINGLE HANDHOLES
  13' (4.0m) OF SLACK SHALL BE PROVIDED IN DOUBLE HANDHOLES.
  5' (1.4m) OF SLACK SHALL BE PROVIDED BETWEEN FRAME AND COVER.

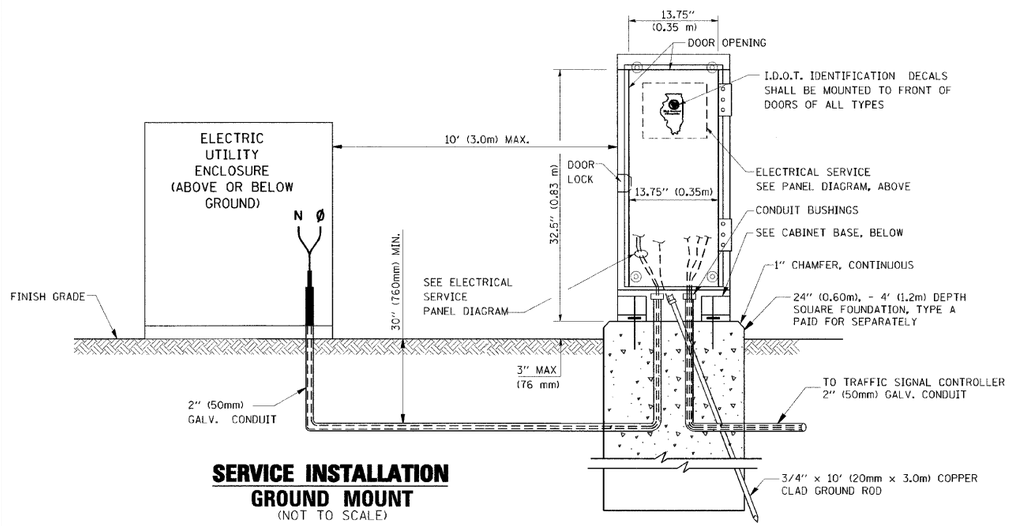


## SERVICE INSTALLATION GROUND MOUNT

(NOT TO SCALE)

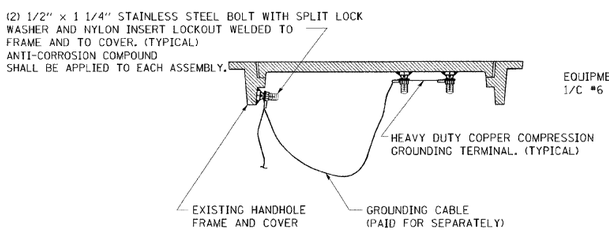


## EXISTING HANDHOLE COVER & FRAME – GROUNDING DETAIL

(NOT TO SCALE)

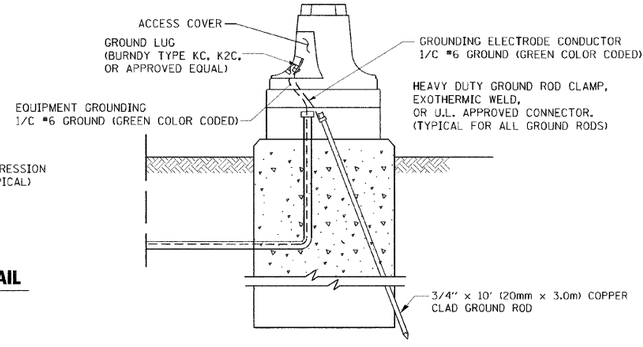


## MAST ARM POLE / POST–GROUNDING DETAIL

(NOT TO SCALE)

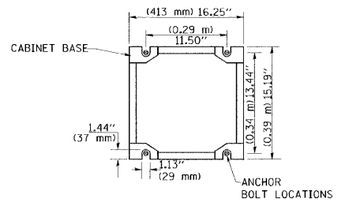


## CABINET – BASE BOLT PATTERN

(NOT TO SCALE)

* 525/345 (US 20) ** McHENRY & KANE

| | | | | | | | | | |
|---|---|---|---|---|---|---|---|---|---|
| FILE NAME = c:\pw_work\PWIDOT\BAUERDL\d0108315\ts05.dgn | USER NAME = bauerdl | DESIGNED - DAD | REVISED - | STATE OF ILLINOIS DEPARTMENT OF TRANSPORTATION | DISTRICT ONE STANDARD TRAFFIC SIGNAL DESIGN DETAILS | F.A.P. RTE. | SECTION | COUNTY | TOTAL SHEETS / SHEET NO. |
| | | DRAWN - BCK | REVISED - | | | * | 2009-089 I | ** | 46 / 43 |
| | PLOT SCALE = 50.0000 ' / IN. | CHECKED - DAD | REVISED - | | | | TS-05 | CONTRACT NO. 60I34 | |
| | PLOT DATE = 11/4/2009 | DATE - 10-28-09 | REVISED - | | SCALE: NONE SHEET NO. 3 OF 6 SHEETS STA. TO STA. | FED. ROAD DIST. NO. 1 | ILLINOIS | FED. AID PROJECT | |

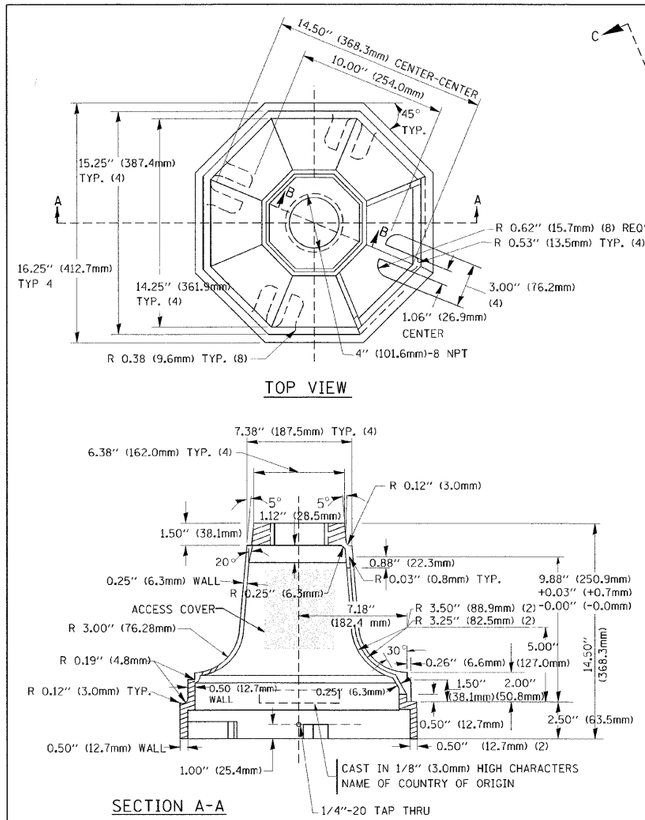


TRAFFIC SIGNAL POST - MOUNTING BASE - TYPE A

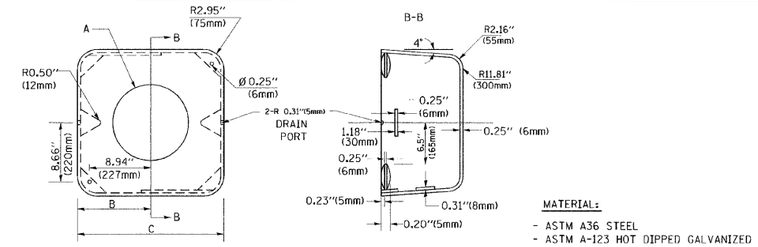


MATERIAL:
- ASTM A36 STEEL
- ASTM A-123 HOT DIPPED GALVANIZED

| A | B | C | HEIGHT | WEIGHT |
|---|---|---|---|---|
| VARIES | 9.5"(241mm) | 19"(483mm) | 7" (178mm) - 12" (300mm) | 53 lbs (24kg) |
| VARIES | 10.75"(273mm) | 21.5"(546mm) | 7" (178mm) - 12" (300mm) | 68 lbs (31 kg) |
| VARIES | 13.0"(330mm) | 26"(660mm) | 7" (178mm) - 12" (300mm) | 81 lbs (37 kg) |
| VARIES | 18.5"(470mm) | 37"(940mm) | 7" (178mm) - 12" (300mm) | 126 lbs (57 kg) |

SHROUD

NOTES:

1. DIMENSION "A" IS EQUAL TO THE DIAMETER OF THE MAST ARM POLE AT THE TOP OF THE SHROUD. THE SHROUD SHALL BE TIGHT TO THE MAST ARM POLE.
2. THE SUPPLIER SHALL VERIFIED THE ABOVE DIMENSIONS BASED ON MAST ARM REQUIREMENTS.
3. THE HEIGHT OF THE SHROUD SHALL COVER THE ANCHOR BOLTS, NUTS AND MAST ARM POLE BASE.

NOTE:
SUPPORT EXISTING CABINET AND CONTROL EQUIPMENT ABOVE FOUNDATION TO KEEP TRAFFIC SIGNAL FUNCTIONING WHILE FOUNDATION MODIFICATION WORK IS PROCEEDING.

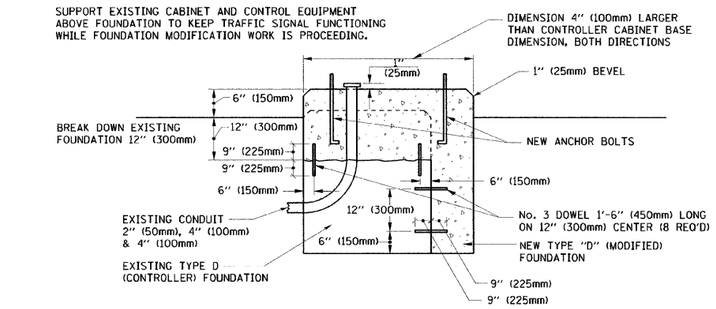


MODIFY EXISTING TYPE "D" FOUNDATION

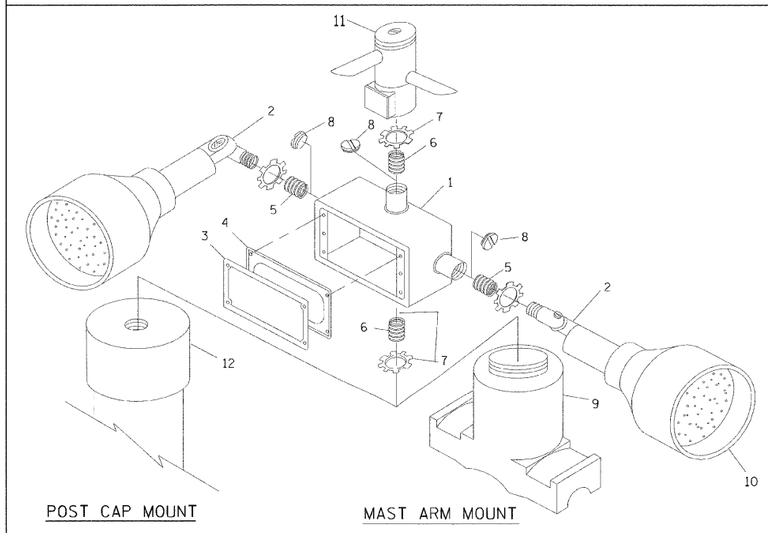


POST CAP MOUNT

MAST ARM MOUNT

| ITEM NO. | IDENTIFICATION |
|---|---|
| 1 | OUTLET BOX- GALV. 21 CU.IN. (0.000344 CU-M) |
| 2 | LAMP HOLDER AND COVER |
| 3 | OUTLET BOX COVER |
| 4 | RUBBER COVER GASKET |
| 5 | REDUCING BUSHING |
| 6 | ¾"(19 mm) CLOSE NIPPLE |
| 7 | ¾"(19 mm) LOCKNUT |
| 8 | ¾"(19 mm) HOLE PLUG |
| 9 | SADDLE BRACKET - GALV. |
| 10 | 6 WATT PAR 38 LED FLOOD LAMP |
| 11 | DETECTOR UNIT |
| 12 | POST CAP [18 FT. (5.4 m) POST MIN.] |

NOTES:

1. ALL ELECTRICAL ITEMS, EXCEPT ITEMS #2 AND #11 SHALL BE ALUMINUM OR GALVANIZED
2. ITEM #1- OZ/GEDNEY FSX-1-50 OR EQUIVALENT
   ITEM #2- MULBERRY CON-O-SHADE LAMP SHIELD OR EQUIVALENT
   ITEM #9- "BAND-IT" SADDLE BRACKET OR EQUIVALENT
3. WHEN POST MOUNTING IS SPECIFIED, ITEM #9 SHALL NOT BE REQUIRED. THE DETECTION UNIT SHALL BE MOUNTED DIRECTLY ON TOP OF THE CAP BY DRILLING AND TAPPING A ¾"(19 mm) HOLE WITH PIPE THREADS. THE POST CAP SHALL EITHER BE SCREWED TO THE TOP OF THE POST OR A MINIMUM OF 3 TIGHTENING SCREWS SHALL BE REQUIRED ON EACH CAP.

EMERGENCY VEHICLE DETECTOR WITH CONFIRMATION BEACON MOUNTING DETAIL

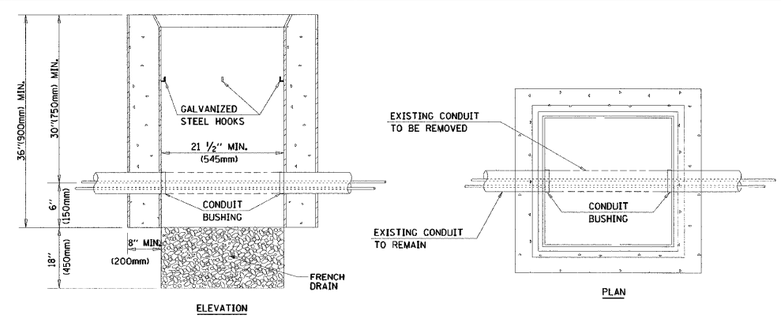


NOTES:

1. HANDHOLE CONSTRUCTED PER STATE STANDARD 814001.
2. REMOVAL OF THE EXISTING CONDUIT FROM THE HANDHOLE AND THE INSTALLATION OF THE CONDUIT BUSHINGS SHALL BE INCIDENTAL TO THE HANDHOLE.

HANDHOLE TO INTERCEPT EXISTING CONDUIT

| | | | |
|---|---|---|---|
| FILE NAME = c:\pw_work\PWIDOT\BAUERDL\d0108315\ts05.dgn | USER NAME = bauerdl | DESIGNED - DAD | REVISED - |
| | | DRAWN - BCK | REVISED - |
| | PLOT SCALE = 50.0000 ' / IN. | CHECKED - DAD | REVISED - |
| | PLOT DATE = 11/4/2009 | DATE - 10-28-09 | REVISED - |

**STATE OF ILLINOIS**
**DEPARTMENT OF TRANSPORTATION**

**DISTRICT ONE**
**STANDARD TRAFFIC SIGNAL DESIGN DETAILS**

SCALE: NONE | SHEET NO. 4 OF 6 SHEETS | STA. | TO STA.

* 525/345 (US 20) ** McHENRY & KANE

| F.A.P. RTE. | SECTION | COUNTY | TOTAL SHEETS | SHEET NO. |
|---|---|---|---|---|
| * | 2009-089 I | ** | 46 | 44 |
| | TS-05 | CONTRACT NO. 60134 | | |

FED. ROAD DIST. NO. 1 | ILLINOIS | FED. AID PROJECT

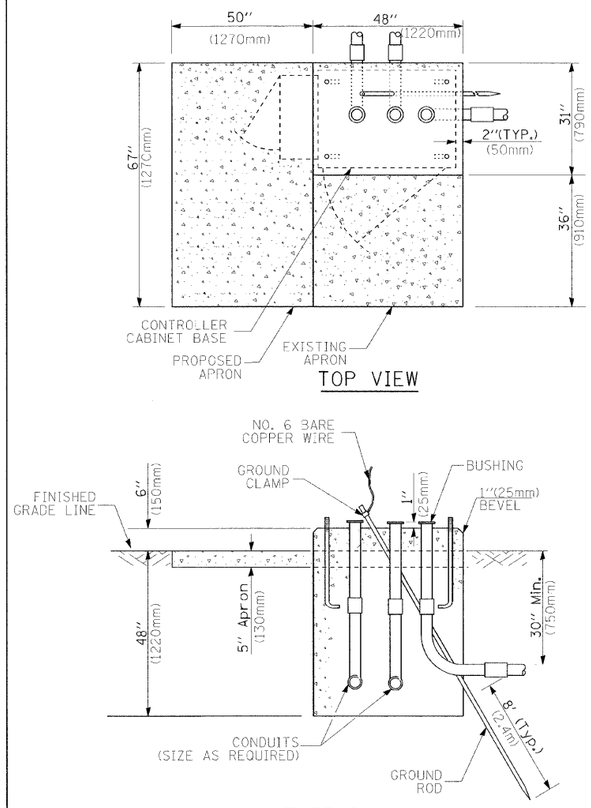


TYPE D
FOR GROUND MOUNTED
CONTROLLER CABINET
AND UPS BATTERY CABINET

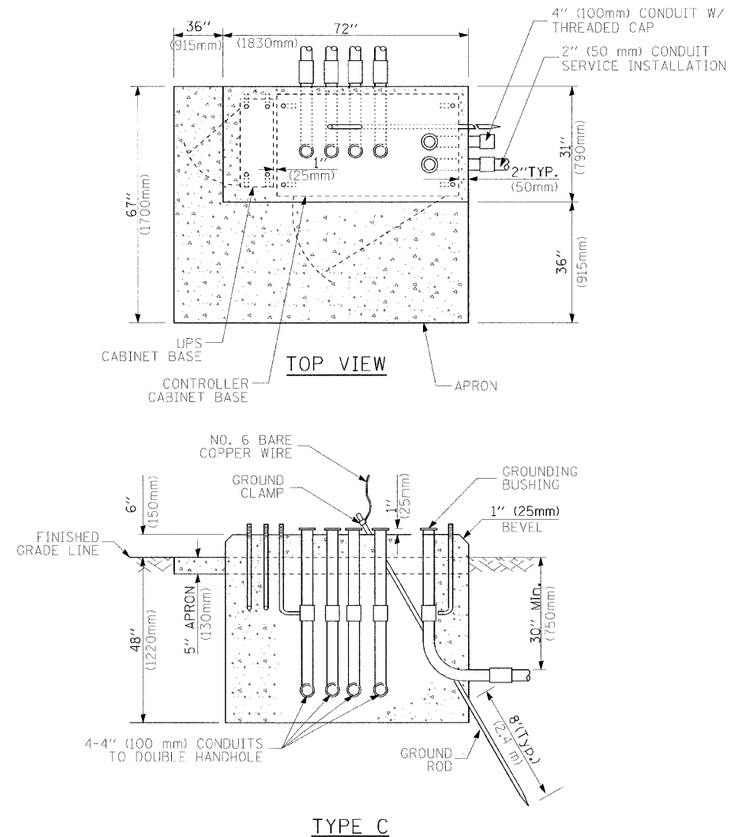


TYPE C
FOR GROUND MOUNTED
CONTROLLER CABINET
AND UPS BATTERY CABINET

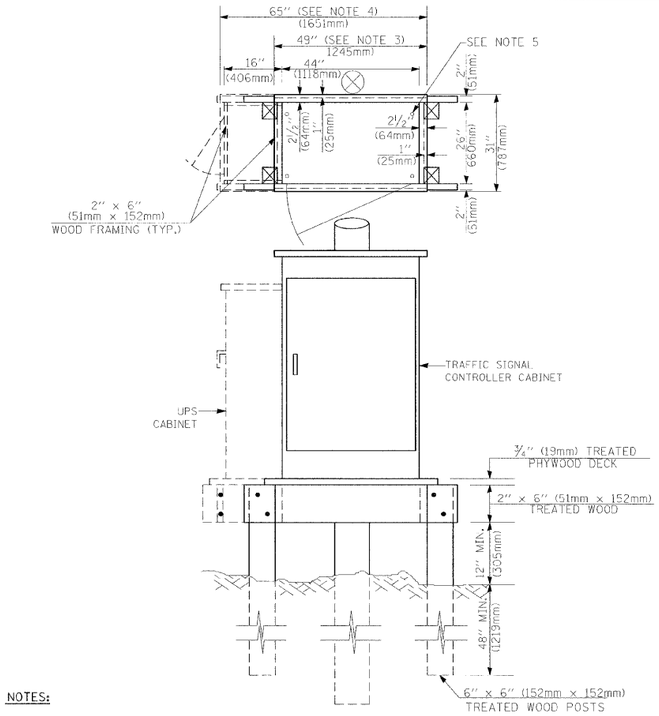


NOTES:

1. BASED ON CONTROLLER CABINET TYPE IV WITH BASE DIMENSIONS OF 26" x 44" (660mm x 1118mm). ADJUST PLATFORM SIZE TO FIT CABINET BASE DIMENSIONS BEING SUPPLIED.
2. BASED ON UNINTERRUPTIBLE POWER SUPPLY CABINET WITH BASE DIMENSIONS OF 16" x 25" (406mm x 635mm). ADJUST PLATFORM SIZE TO FIT CABINET BASE DIMENSIONS BEING SUPPLIED.
3. PLATFORM SIZE FOR CONTROLLER CABINET TYPE IV.
4. PLATFORM SIZE FOR CONTROLLER CABINET TYPE IV AND UNINTERRUPTIBLE POWER SUPPLY CABINET.
5. DRILLED HOLES THROUGH THE PLATFORM BASE TO MATCH THE CONTROLLER CABINET BOLT TEMPLATE. FASTEN THE CONTROLLER CABINET TO THE PLATFORM WITH CARRIAGE BOLTS, WASHERS AND NUTS.
6. FASTEN ALL SUPPORT WOOD FRAMING TO THE WOOD POSTS WITH 2 LAG SCREWS FOR EACH CONNECTION.

TEMPORARY SIGNAL CONTROLLER
WOOD SUPPORT PLATFORM

| CABLE SLACK LENGTH | FEET | METER |
|---|---|---|
| HANDHOLE | 6.5 | 2.0 |
| DOUBLE HANDHOLE | 13.0 | 4.0 |
| SIGNAL POST | 2.0 | 0.6 |
| MAST ARM | 2.0 | 0.6 |
| CONTROLLER CABINET | 1.5 | 0.5 |
| FIBER OPTIC AT CABINET | 13.0 | 4.0 |
| ELECTRIC SERVICE AT (CABINET OR SERVICE LOCATION) | 1.5 | 0.5 |
| GROUND CABLE (SIGNAL POST, MAST ARM, CABINET) | 1.5 | 0.5 |
| GROUND CABLE (BETWEEN FRAME AND COVER) | 5.0 | 1.6 |

CABLE SLACK

| VERTICAL CABLE LENGTH | FEET | METER |
|---|---|---|
| MAST ARM POLE ( MAST ARM MOUNTED SIGNAL HEAD) (L = MAST ARM LENGTH - DISTANCE TO SIGNAL HEAD FROM END OF ARM) | 20.0+L | 6.0+L |
| BRACKET MOUNTED (MAST ARM POLE OR SIGNAL POLE) | 13.0 | 4.0 |
| PEDESTRIAN PUSH BUTTON | 6.0 | 2.0 |
| SERVICE INSTALLATION POLE MOUNT TO SERVICE DROP | 13.5 | 4.1 |
| SERVICE INSTALLATION POLE MOUNT TO GROUND | 13.5 | 4.1 |
| SERVICE INSTALLATION GROUND MOUNT | 6.0 | 2.0 |
| FOUNDATION (SIGNAL POST, MAST ARM POLE, CONTROLLER CABINET, SERVICE-GROUND MOUNT) | 3.0 | 1.0 |

VERTICAL CABLE LENGTH

| FOUNDATION | DEPTH |
|---|---|
| TYPE A - Signal Post | 4'-0" (1.2m) |
| TYPE C - CONTROLLER W/ UPS | 4'-0" (1.2m) |
| TYPE D - CONTROLLER | 4'-0" (1.2m) |
| SERVICE INSTALLATION, GROUND MOUNT, TYPE A - SQUARE | 4'-0" (1.2m) |

DEPTH OF FOUNDATION

| Mast Arm Length | ① Foundation Depth | Foundation Diameter | Spiral Diameter | Quantity of Rebars | Size of Rebars |
|---|---|---|---|---|---|
| Less than 30' (9.1 m) | 10'-0" (3.0 m) | 30" (750mm) | 24" (600mm) | 8 | 6(19) |
| Greater than or equal to 30' (9.1 m) and less than 40' (12.2 m) | 13'-6" (4.1 m) | 30" (750mm) | 24" (600mm) | 8 | 6(19) |
| | 11'-0" (3.4 m) | 36" (900mm) | 30" (750mm) | 12 | 7(22) |
| Greater than or equal to 40' (12.2 m) and less than 50' (15.2 m) | 13'-0" (4.0 m) | 36" (900mm) | 30" (750mm) | 12 | 7(22) |
| Greater than or equal to 50' (15.2 m) and up to 55' (16.8 m) | 15'-0" (4.6 m) | 36" (900mm) | 30" (750mm) | 12 | 7(22) |
| Greater than or equal to 56' (16.8 m) and less than 65' (19.8 m) | 21'-0" (6.4 m) | 42" (1060mm) | 36" (900mm) | 16 | 8(25) |
| Greater than or equal to 65' (19.8 m) and up to 75' (22.9 m) | 25'-0" (7.6 m) | 42" (1060mm) | 36" (900mm) | 16 | 8(25) |

NOTES:

1. These foundation depths are for sites which have cohesive soils (clayey silt, sandy clay, etc.) along the length of the shaft, with an average Unconfined Compressive Strength (Qu) > 1.0 tsf (100 kpa). This strength shall be verified by boring data prior to construction or with testing by the Engineer during foundation drilling. The Bureau of Bridges & structures should be contacted for a revised design if other conditions are encountered.
2. Combination mast arm assemblies under 55 feet (16.8 m) shall use 36" (900 mm) diameter foundations.
3. Combination mast arm assemblies under 56 feet (16.8 m) through 75 feet (22.9 m) shall use 42" (1060 mm) diameter foundations.
4. For mast arm assemblies with dual arms refer to state standard 878001.

DEPTH OF MAST ARM FOUNDATIONS, TYPE E

* 525/345 (US 20)
** McHENRY & KANE

| | | | |
|---|---|---|---|
| FILE NAME = c:\pw_work\PWIDOT\BAUERDL\d0108315\ts05.dgn | USER NAME = bauerdl | DESIGNED - DAG | REVISED - |
| | PLOT SCALE = 50.0000 ' / IN. | DRAWN - BCK | REVISED - |
| | PLOT DATE = 11/4/2009 | CHECKED - DAD | REVISED - |
| | | DATE - 10-28-09 | REVISED - |

**STATE OF ILLINOIS**
**DEPARTMENT OF TRANSPORTATION**

**DISTRICT ONE**
**STANDARD TRAFFIC SIGNAL DESIGN DETAILS**

SCALE: NONE | SHEET NO. 5 OF 6 SHEETS | STA. | TO STA.

| F.A.P. RTE. | SECTION | COUNTY | TOTAL SHEETS | SHEET NO. |
|---|---|---|---|---|
| * | 2009-089 I | ** | 46 | 45 |
| | TS-05 | CONTRACT NO. 60I34 | | |

FED. ROAD DIST. NO. 1 | ILLINOIS | FED. AID PROJECT

# TRAFFIC SIGNAL LEGEND

| ITEM | REMOVAL | EXISTING | PROPOSED |
|---|---|---|---|
| CONTROLLER CABINET | R | | |
| RAILROAD CONTROL CABINET | | R R | R R |
| COMMUNICATIONS CABINET | R CC | ECC | CC |
| MASTER CONTROLLER | | EMC | MC |
| MASTER MASTER CONTROLLER | | EMMC | MMC |
| UNINTERRUPTIBLE POWER SUPPLY | R UPS | EUPS | UPS |
| SERVICE INSTALLATION, (P) POLE OR (C) GROUND MOUNT | R | P | P |
| TELEPHONE CONNECTION (P) POLE OR (G) GROUND MOUNT | R T | P T | P T |
| STEEL MAST ARM ASSEMBLY AND POLE | R | | |
| ALUMINUM MAST ARM ASSEMBLY AND POLE | R | | |
| STEEL COMBINATION MAST ARM ASSEMBLY AND POLE WITH LUMINAIRE | R | | |
| STEEL COMBINATION MAST ARM ASSEMBLY AND POLE WITH PTZ CAMERA | R PTZ | PTZ | PTZ |
| SIGNAL POST | R | | |
| TEMPORARY WOOD POLE (CLASS 5 OR BETTER) 45 FOOT (13.7m) MINIMUM | R | | |
| GUY WIRE | R | | |
| SIGNAL HEAD | R | | |
| SIGNAL HEAD CONSTRUCTION STAGES (NUMBERS INDICATE THE CONSTRUCTION STAGE) | | | 2 |
| SIGNAL HEAD WITH BACKPLATE | R | | |
| SIGNAL HEAD OPTICALLY PROGRAMMED | R "P" | "P" | "P" |
| FLASHER INSTALLATION (S DENOTES SOLAR POWER) | R "F" | "F" | "F" |
| PEDESTRIAN SIGNAL HEAD | R | | |
| PEDESTRIAN PUSHBUTTON DETECTOR | R | | |
| ACCESSIBLE PEDESTRIAN PUSHBUTTON DETECTOR | R APS | APS | APS |
| ILLUMINATED SIGN "NO LEFT TURN" | R | | |
| ILLUMINATED SIGN "NO RIGHT TURN" | R | | |
| DETECTOR LOOP, TYPE I | | | |
| PREFORMED DETECTOR LOOP | | P | P |
| MICROWAVE VEHICLE SENSOR | R M | M | M |
| VIDEO DETECTION CAMERA | R V | V | V |
| VIDEO DETECTION ZONE | | | |
| PAN, TILT, ZOOM CAMERA | R PTZ | PTZ | PTZ |
| WIRELESS DETECTOR SENSOR | R W | W | W |
| WIRELESS ACCESS POINT | R | | |

| ITEM | REMOVAL | EXISTING | PROPOSED |
|---|---|---|---|
| EMERGENCY VEHICLE LIGHT DETECTOR | R | | |
| CONFIRMATION BEACON | R | | |
| HANDHOLE | R | | |
| HEAVY DUTY HANDHOLE | R H | H | H |
| DOUBLE HANDHOLE | R | | |
| JUNCTION BOX | R | | |
| GALVANIZED STEEL CONDUIT IN TRENCH (T) OR PUSHED (P) | | | |
| TEMPORARY SPAN WIRE, TETHER WIRE, AND CABLE | R | | |
| COMMON TRENCH | | | CT |
| COILABLE NONMETALLIC CONDUIT (EMPTY) | | | CNC |
| SYSTEM ITEM | | S | S |
| INTERSECTION ITEM | | I | IP |
| REMOVE ITEM | R | | |
| RELOCATE ITEM | RL | | |
| ABANDON ITEM | A | | |
| 12" (300mm) TRAFFIC SIGNAL SECTION | | R | R |
| 12" (300mm) RED WITH 8" (200mm) YELLOW AND GREEN TRAFFIC SIGNAL FACE | | R Y G | |
| SIGNAL FACE | | R Y G Y G | R Y G Y G |
| SIGNAL FACE WITH BACKPLATE. "P" INDICATES PROGRAMMED HEAD | | R Y G Y G "P" | R Y G Y G "P" |
| 12" (300mm) PEDESTRIAN SIGNAL HEAD WALK/DON'T WALK SYMBOL | | DW W | |
| 12" (300mm) PEDESTRIAN SIGNAL HEAD INTERNATIONAL SYMBOL, OUTLINED | | | |
| 12" (300mm) PEDESTRIAN SIGNAL HEAD INTERNATIONAL SYMBOL, SOLID | | | |
| PEDESTRIAN SIGNAL HEAD, INTERNATIONAL SYMBOL, WITH COUNTDOWN TIMER | | C D | C D |
| RADIO INTERCONNECT | R | | |
| RADIO REPEATER | R ERR | ERR | RR |
| DENOTES NUMBER OF CONDUCTORS, ELECTRIC CABLE NO. 14, UNLESS NOTED OTHERWISE. ALL DETECTOR LOOP CABLE TO BE SHIELDED | | 5 | 5 |
| GROUND CABLE IN CONDUIT NO. 6 SOLID COPPER (GREEN) | | 1 | 1 |

| ITEM | REMOVAL | EXISTING | PROPOSED |
|---|---|---|---|
| ELECTRIC CABLE IN CONDUIT, TRACER, NO. 14 1/C, UNLESS NOTED OTHERWISE | | 1 | 1 |
| COAXIAL CABLE | | C | C |
| VENDOR CABLE FOR CAMERA | | V | V |
| COPPER INTERCONNECT CABLE, NO. 18 3 PAIR TWISTED, SHIELDED | | 6 | 6 |
| FIBER OPTIC CABLE NO. 62.5/125, MM12F | | 12F | |
| FIBER OPTIC CABLE NO. 62.5/125, MM12F SM12F | | 24F | 24F |
| FIBER OPTIC CABLE NO. 62.5/125, (NUMBER OF FIBERS & TYPE TO BE NOTED ON PLANS) | | | |
| GROUND ROD AT (C) CONTROLLER, (H) HANDHOLE, (P) POST, (M) MAST ARM, OR (S) SERVICE | | C | C |
| CONTROLLER CABINET AND FOUNDATION TO BE REMOVED | RCF | | |
| STEEL MAST ARM POLE AND FOUNDATION TO BE REMOVED | RMF | | |
| ALUMINUM MAST ARM POLE AND FOUNDATION TO BE REMOVED | RMF | | |
| STEEL COMBINATION MAST ARM ASSEMBLY AND POLE WITH LUMINAIRE AND FOUNDATION TO BE REMOVED | RMF | | |
| SIGNAL POST AND FOUNDATION TO BE REMOVED | RMF | | |
| INTERSECTION & SAMPLING (SYSTEM) DETECTOR | | IS | IS |
| SAMPLING (SYSTEM) DETECTOR | | S | S |
| EXISTING INTERSECTION LOOP DETECTOR PROPOSED INTERSECTION AND SAMPLING (SYSTEM) DETECTOR | | P | |
| EXISTING PREFORMED INTERSECTION LOOP DETECTOR PROPOSED INTERSECTION AND SAMPLING (SYSTEM) DETECTOR | | PP | |
| PREFORMED INTERSECTION AND SAMPLING (SYSTEM) DETECTOR | | PIS | PIS |
| PREFORMED SAMPLING (SYSTEM) DETECTOR | | PS | PS |

# RAILROAD SYMBOLS

| | EXISTING | PROPOSED |
|---|---|---|
| RAILROAD CONTROL CABINET | R R | R R |
| RAILROAD CANTILEVER MAST ARM | | |
| FLASHING SIGNAL | | |
| CROSSING GATE | | |
| CROSSBUCK | | |

* 525/345 (US 20) ** McHENRY & KANE

| | | | |
|---|---|---|---|
| FILE NAME = c:\pw_work\PWIDOT\BALERDL\d0100315\ts05.dgn | USER NAME = beverdl | DESIGNED - DAG/BCK | REVISED - |
| | | DRAWN - BCK | REVISED - |
| | PLOT SCALE = 50.0000 ' / IN. | CHECKED - DAD | REVISED - |
| | PLOT DATE = 11/4/2009 | DATE - 10-28-09 | REVISED - |

**STATE OF ILLINOIS**
**DEPARTMENT OF TRANSPORTATION**

**DISTRICT ONE**
**STANDARD TRAFFIC SIGNAL DESIGN DETAILS**

SCALE: NONE | SHEET NO. 6 OF 6 SHEETS | STA. TO STA.

| F.A.P. RTE. | SECTION | COUNTY | TOTAL SHEETS | SHEET NO. |
|---|---|---|---|---|
| * | 2009-089 I | ** | 46 | 46 |
| | TS-05 | CONTRACT NO. 60134 | | |

FED. ROAD DIST. NO. 1 | ILLINOIS | FED. AID PROJECT