STATE OF ILLINOIS
DEPARTMENT OF TRANSPORTATION

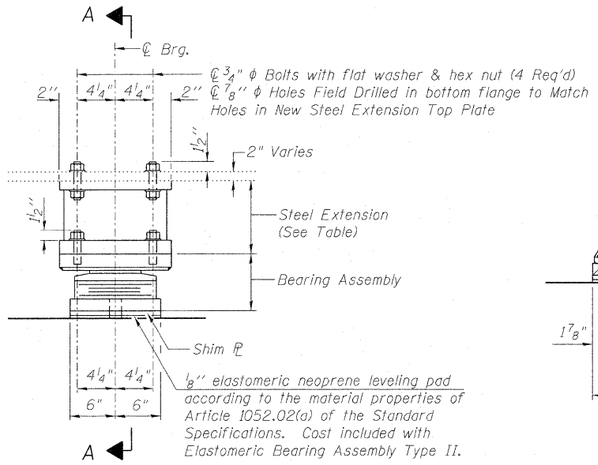

TYPE II ELASTOMERIC EXP. BRG.
(Pier 24 & Pier 27)

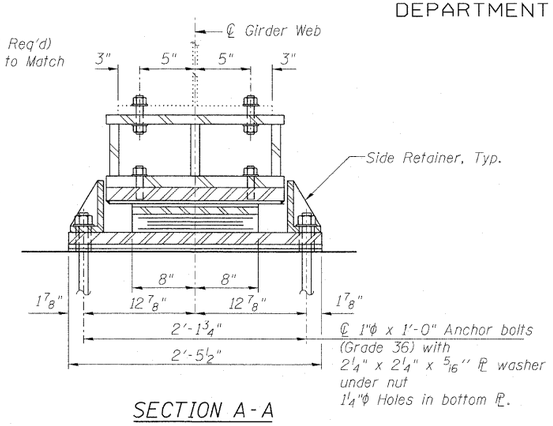

SECTION A-A

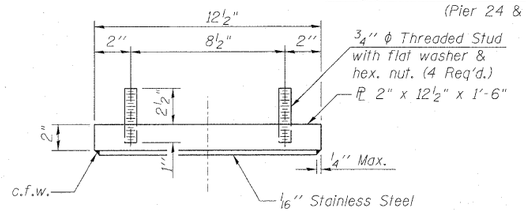

TOP BEARING ASSEMBLY

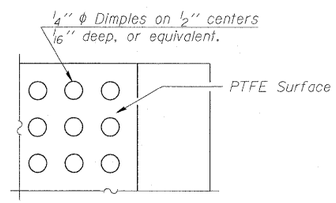

PLAN-PTFE SURFACE

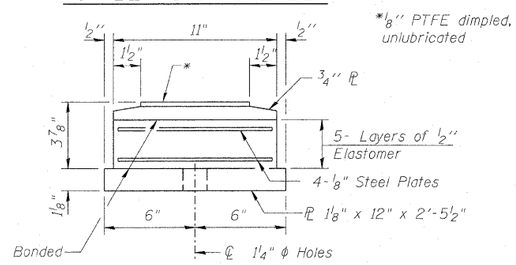

BOTTOM BEARING ASSEMBLY

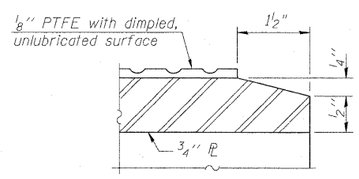

SECTION THRU PTFE

Notes:

Hatch area indicates Bearing removal. See Special Provision for Jack and Remove Existing Bearings. Cribbing shall be designed to resist horizontal and vertical loads at bearing locations.

Anchor bolts shall be ASTM F1554 all-thread (or an Engineer-approved alternate material) of the grade(s) and diameter(s) specified. ASTM A307 Grade C anchor bolts may be used in lieu of ASTM F1554 Grade 36 (Fy=36ksi). The corresponding specified grade of AASHTO M314 anchor bolts may be used in lieu of ASTM F1554.

Anchor bolts for Type II bearings shall be placed in holes drilled in the concrete through holes in the bottom bearing plate after members are in place. Side retainers shall be placed after bolts are installed.

Drilled and set anchor bolts shall be installed according to Article 521.06 of the Standard Specifications.

Side retainers and other steel members required for the bearing assembly shall be included in the cost of Elastomeric Bearing Assembly, Type II.

The 1/8" PTFE sheet shall be bonded directly to the top steel plate with a two-component, medium viscosity epoxy resin, conforming to the requirements of the Federal Specification MMM-A-134, Type I. The bond agent shall be applied on the full area of the contact surfaces.

Bonding of 1/8" PTFE sheet during vulcanizing process will be permitted provided the process and method of adjusting assembly height is approved by the Engineer.

Steel Extensions and fasteners shall be included in the cost of Furnishing and Erecting Structural Steel.

Fasteners shall be AASHTO M164 Type 1, mechanically galvanized bolts.

The Contractor is to verify the existing dimensions prior to fabricating the steel extensions. It is intended to keep the existing beams at their current elevation.

Two 1/8 in. adjusting shims shall be provided for each bearing in addition to all other plates or shims and placed as shown on bearing details.

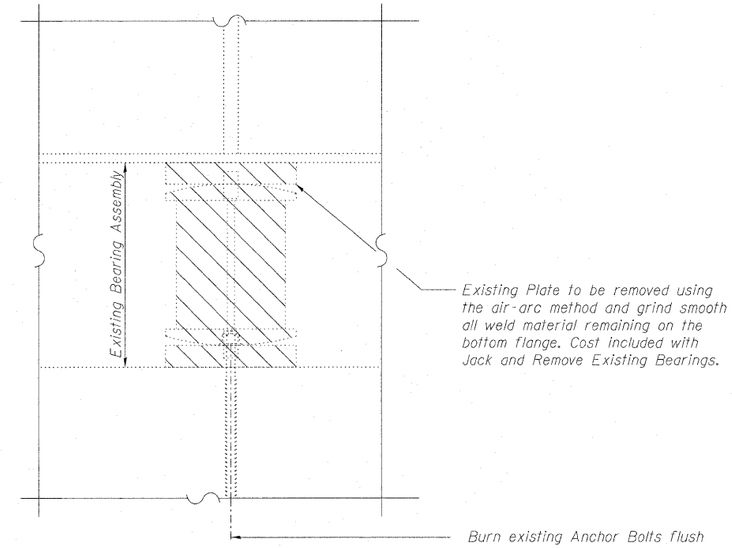

EXISTING BEARING REMOVAL DETAIL

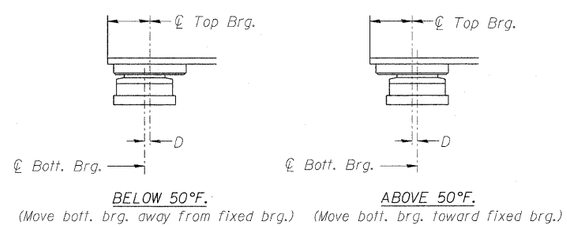

BELOW 50°F.
(Move bott. brg. away from fixed brg.)

ABOVE 50°F.
(Move bott. brg. toward fixed brg.)

SETTING ANCHOR BOLTS AT EXP. BRG.

D=1/8" per each 100' of expansion for every 15° temp. change from the normal temp. of 50°F.

STEEL EXTENSION DIMENSIONS

Location	A	B
Pier 24 S	5 1/16"	7 1/16"
Pier 24 N	4 7/8"	6 7/8"
Pier 27 S	5 1/8"	7 1/8"
Pier 27 N	4 13/16"	6 13/16"

BILL OF MATERIAL

Item	Unit	Total
Elastomeric Bearing Assembly Type II	Each	20
Anchor Bolts, 1"	Each	40
Jack and Remove Existing Bearings	Each	20
Furnishing and Erecting Structural Steel	Pound	4040

GIRDER REACTION TABLE

	Pier 24 S	Pier 24 N	Pier 27 S	Pier 27 N
Dead Load (K)	58.8	62.4	66.4	67.9
Live Load (K)	56.9	57.2	57.6	57.9
Impact (K)	13.0	12.9	12.7	12.5
Total (K)	128.7	132.5	136.7	138.3
Min. Jack Capacity (Tons)	75	75	80	80

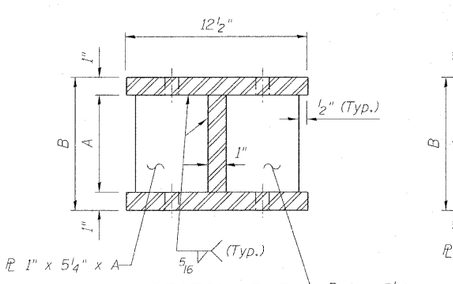

SECTION B-B

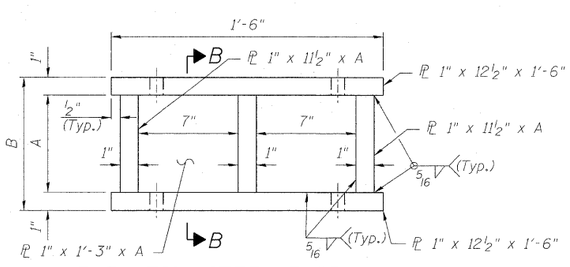

ELEVATION STEEL EXTENSION

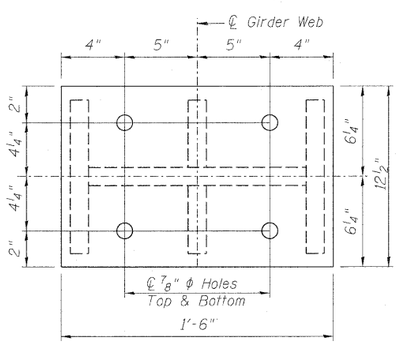

PLAN STEEL EXTENSION

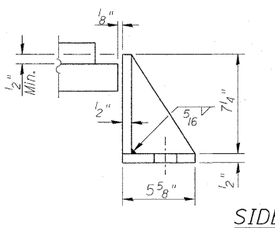

SIDE RETAINER

Equivalent rolled angle with stiffeners will be allowed in lieu of welded plates.

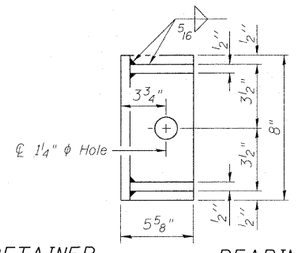

BEARING DETAILS (3 of 3)
STRUCTURE NO. 016-2407

LIN ENGINEERING, LTD.
Consulting Engineers
Chatham, Illinois

Designed By: TBP | Checked By: MTH | Drawn By: TBP
Date: 1/2005 | File: 016-2407.dgn

SHEET NO. 22
27 SHEETS

F.A.P. RTE.	SECTION	COUNTY	TOTAL SHEETS	SHEET NO.
330	462 X-B-I	COOK	54	42

CONTRACT NO. 60J37

ILLINOIS FED. AID PROJECT