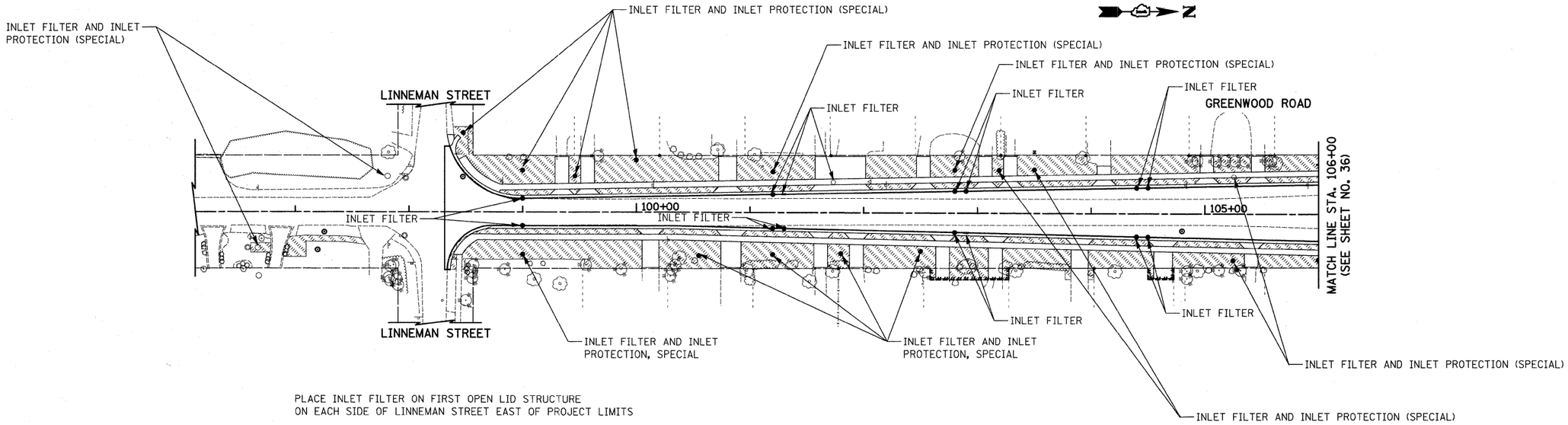

PLACE INLET FILTER ON FIRST OPEN LID STRUCTURE
ON EACH SIDE OF LINNEMAN STREET EAST OF PROJECT LIMITS

LEGEND

- TOPSOIL, FURNISH AND PLACE 4" SODDING, SALT TOLERANT
- SEDIMENT CONTROL, SILT FENCE
- PROPOSED TREE (CENTERED BETWEEN SIDEWALK AND EX ROW)
- SR JAPANESE TREE LILAC
- AC HEDGE MAPLE

PLANT LIST

SYMBOL	BOTANIC NAME (COMMON NAME)	SIZE	QUANTITY
	TREES		
SR	SYRINGA RETICULATA (JAPANESE TREE LILAC)	2½" DIA.	6
AC	ACER CAMPESTRE (HEDGE MAPLE)	2½" DIA.	6

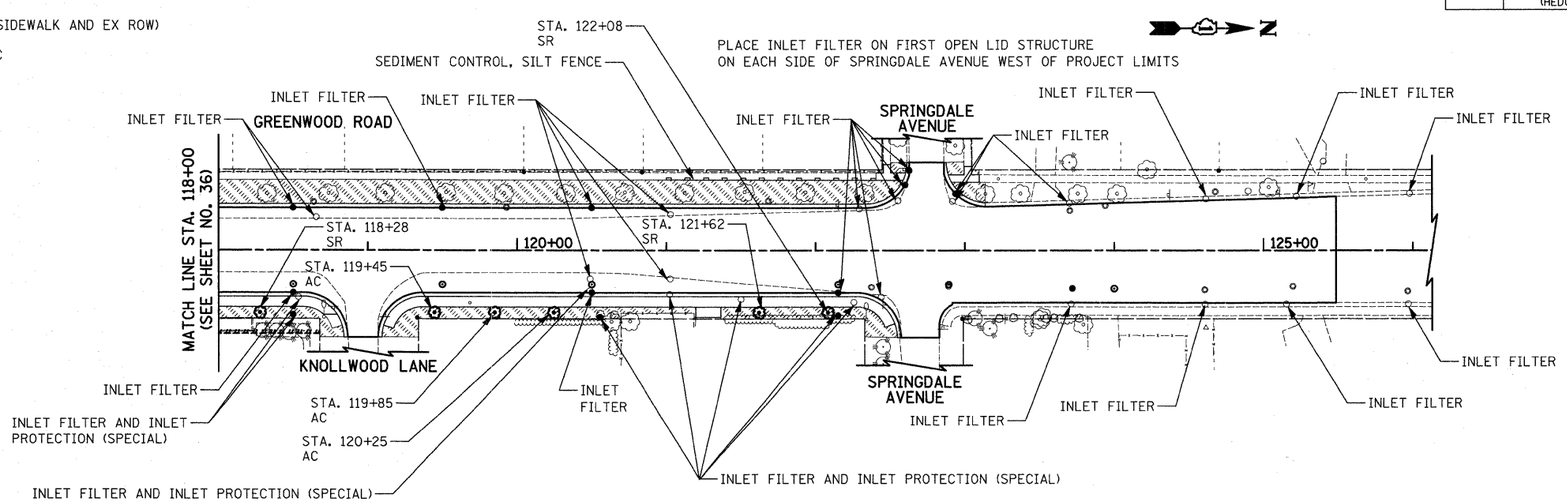

PLACE INLET FILTER ON FIRST OPEN LID STRUCTURE
ON EACH SIDE OF SPRINGDALE AVENUE WEST OF PROJECT LIMITS

PLACE INLET FILTER ON FIRST OPEN LID STRUCTURE
ON EACH SIDE OF KNOLLWOOD LANE EAST OF PROJECT LIMITS

PLACE INLET FILTER ON FIRST OPEN LID STRUCTURE
ON EACH SIDE OF SPRINGDALE AVENUE EAST OF PROJECT LIMITS

50 0 50
SCALE IN FEET

FILE NAME = J:\2275\Cad\Sheet\2275_LSC_ERO_2.dgn	USER NAME = blg	DESIGNED - KRK	REVISED -	STATE OF ILLINOIS DEPARTMENT OF TRANSPORTATION	EROSION CONTROL AND LANDSCAPING PLAN	F.A.U. RTE.	SECTION	COUNTY	TOTAL SHEETS / SHEET NO.
		DRAWN - KRK	REVISED -			2743	05-00161-00-CH	COOK	112 / 37
	PLOT SCALE = 50.0000 ' / IN.	CHECKED - DJK	REVISED -			CONTRACT NO. 63383			
	PLOT DATE = 11/23/2009	DATE - 11-23-09	REVISED -		SCALE: 1" = 50' / SHEET NO. 2 OF 2 SHEETS / STA. TO STA.	FED. ROAD DIST. NO. 1	ILLINOIS	FED. AID PROJECT M-8003(543)	