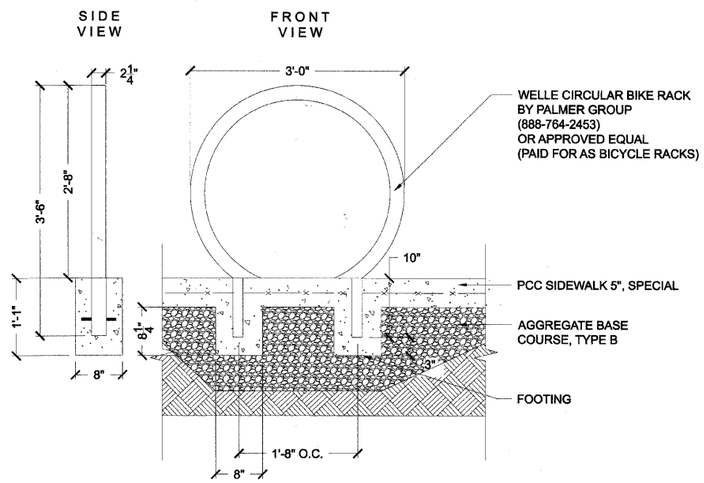

1 Bicycle Rack
Scale: 1"=2'

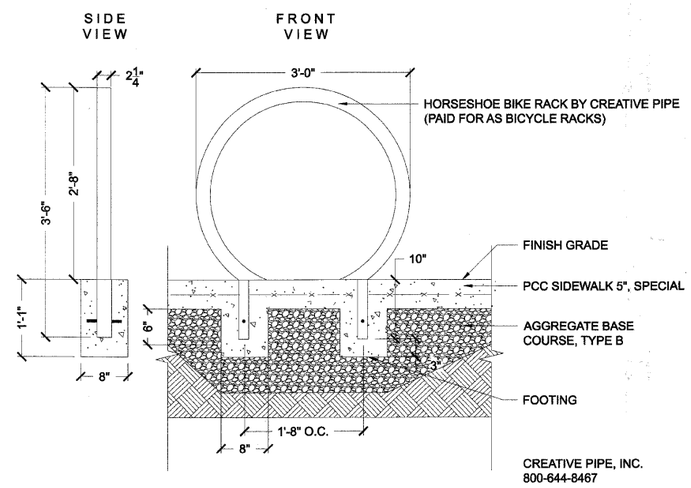

2 Bicycle Rack (*Approved Equal*)
Scale: 1"=2'

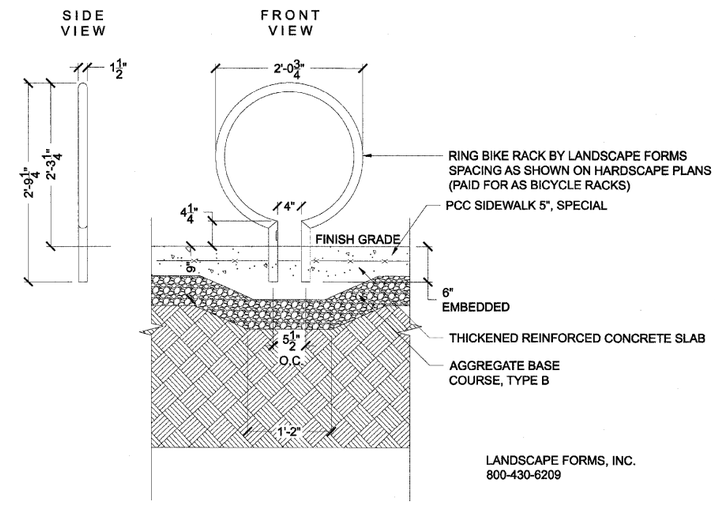

3 Landscape Forms Ring Bike Rack (*Approved Equal*)
Scale: 1"=2'

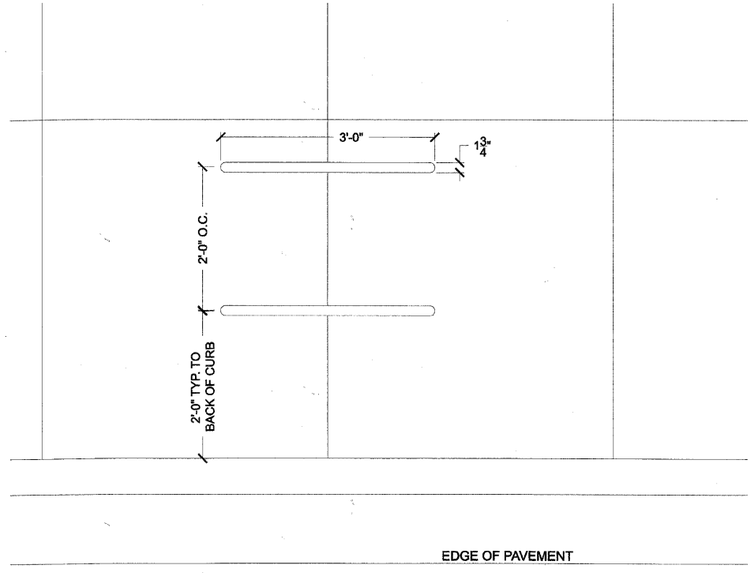

2 Welles Circular Bike Rack - PLAN
Scale: 1"=2'

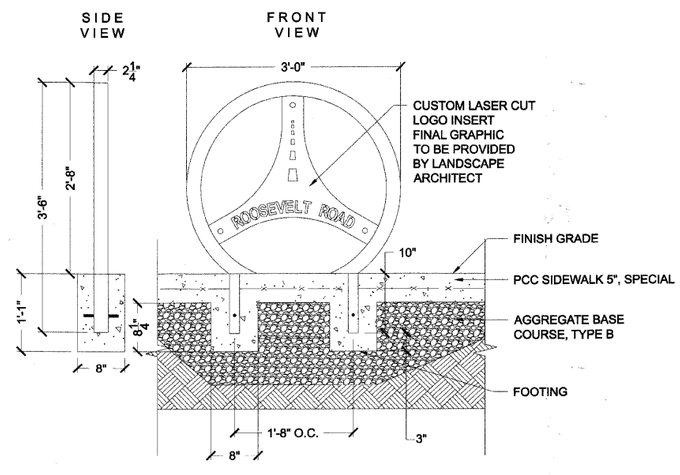

3 Bicycle Racks - Furnish
Scale: 1"=2'

FILE NAME = D1RTE38-sht-landscp23.dgn	USER NAME = IDOT	DESIGNED - SC	REVISED -
		DRAWN - DG	REVISED -
	PLOT SCALE = 20.0000 ' / IN.	CHECKED - JB	REVISED -
	PLOT DATE = 3/11/2010	DATE -	REVISED -

STATE OF ILLINOIS
DEPARTMENT OF TRANSPORTATION

LANDSCAPE DETAILS

SCALE: 1" = 2' | SHEET NO. 23 OF 28 SHEETS | STA. | TO STA.

F.A.P. RTE.	SECTION	COUNTY	TOTAL SHEETS	SHEET NO.
347	09-00248-00-RS	COOK	274	188
		CONTRACT NO. 63432		
		ILLINOIS FED. AID PROJECT		