CONTRACT NO. 66645

F.A.U. RTE.	SECTION	COUNTY	TOTAL SHEETS	SHEET NO.
I-80	50-8 HBR	LASALLE	143	106
STA.		TO STA.		
FED. ROAD DIST. NO. 3	ILLINOIS	FED. AID PROJECT		

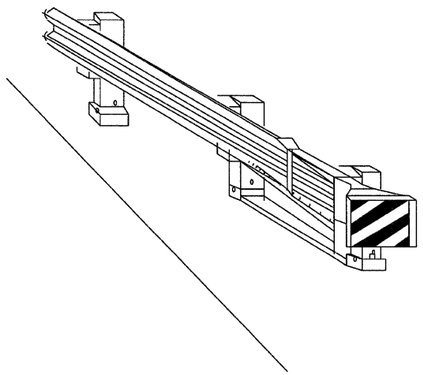

CASE I

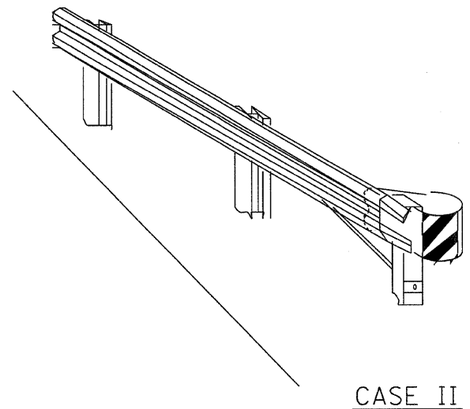

CASE II

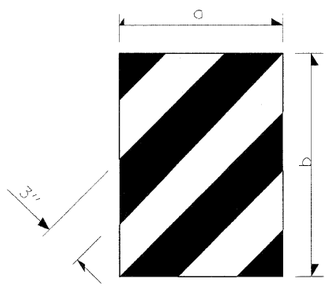

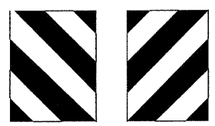

DIMENSION	CASE I *	CASE II
a	15	18
b	20	16

*Minimum of 300 in^2

TERMINAL MARKER DETAILS

Color: Black / Yellow reflectorized

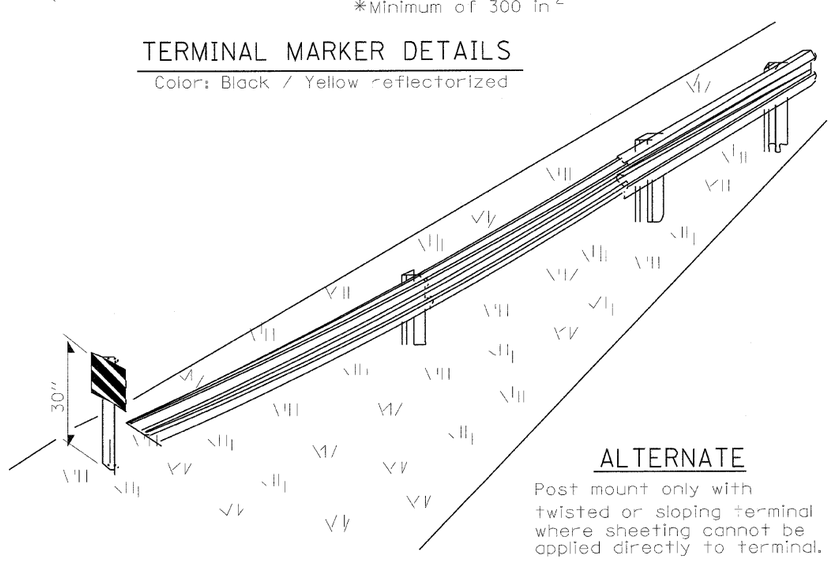

ALTERNATE

Post mount only with twisted or sloping terminal where sheeting cannot be applied directly to terminal.

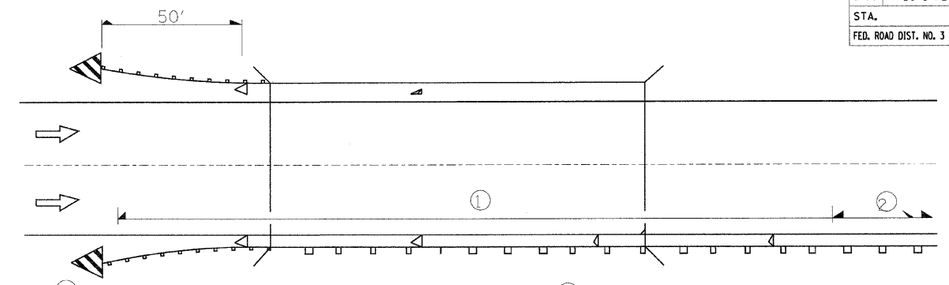

1 Spacing 80 ft max. for first 400 ft or curve spacing shown in Standard 635001, whichever is less (min. 4 reflectors regardless of length).

2 After 400 ft, transition to normal delineator spacing shown in Standard 635001, and continue as required.

ONE-WAY TRAFFIC

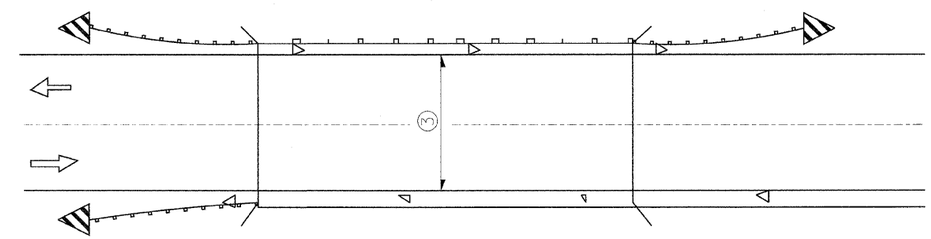

3 Bidirectional silver/silver should be used in lieu of monodirectional silver on both sides of two-lane bridges where the pavement is less than 24" wider than the pavement approaching the bridge.

◁ Monodirectional silver

◀ Monodirectional amber

Terminal Marker - Black/Yellow Left or Right as appropriate

TWO-WAY TRAFFIC

GUARDRAIL / BARRIER WALL / BRIDGE RAIL REFLECTIORS

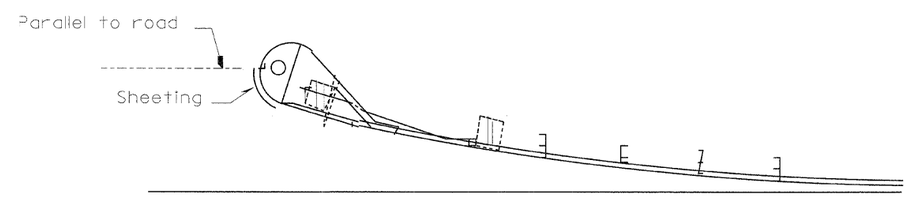

SHEETING POSITION: CASE II

635-1

REVISIONS	
NAME	DATE

ILLINOIS DEPARTMENT OF TRANSPORTATION
FAI ROUTE 80 UNDER FAU 6097 (PLANK ROAD)

DISTRICT 3 DETAILS

SCALE: VERT. NONE HORIZ. N.T.S.
DATE: 12/02/09

DRAWN BY ENTRAN/CAD
CHECKED BY TMH

PLOT DATE = 2/4/2010
FILE NAME = g:\project\2054089.001\cadd\PLdsdet05.rds
PLOT SCALE = 50.0000 ' / IN.
USER NAME = 2pienid

ENTRAN