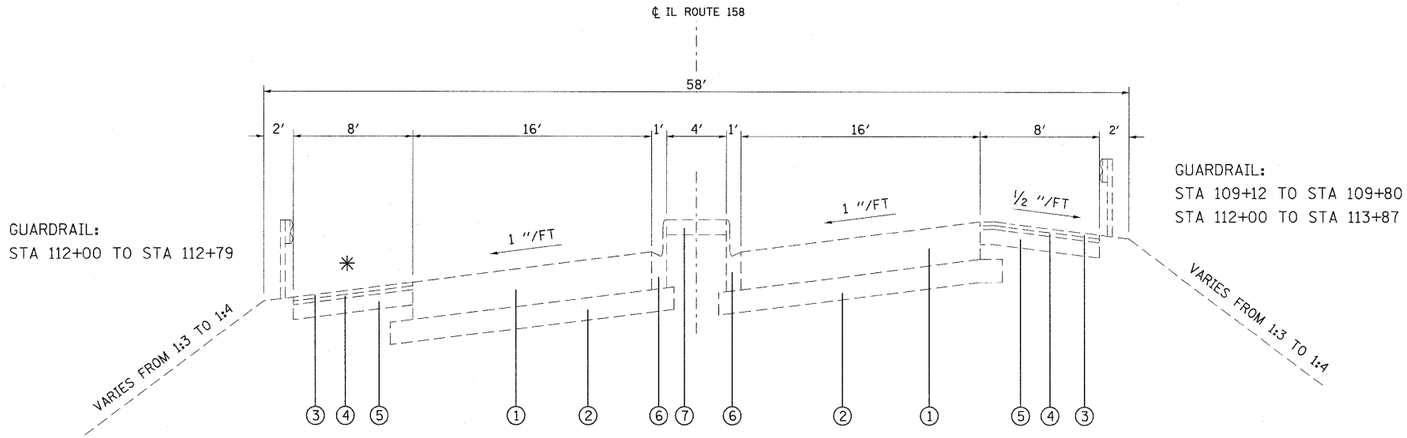

EXISTING SUPERELEVATED TYPICAL SECTION

STA 103+20 TO STA 109+80

STA 112+00 TO STA 114+80.10

LEGEND

1. EXISTING PORTLAND CEMENT CONCRETE PAVEMENT - 10"
2. EXISTING SUB-BASE GRANULAR MATERIAL, TYPE A - 6"
3. EXISTING BITUMINOUS CONCRETE SURFACE COURSE, SUB-CLASS I-11 (SHOULDERS) - 1 1/2 " Δ1
4. EXISTING BITUMINOUS CONCRETE BINDER COURSE (SHOULDERS) - 1 1/2 "
5. EXISTING STABILIZED SHOULDERS
6. EXISTING COMBINATION CONCRETE CURB AND GUTTER, TYPE B-9.06
7. EXISTING PORTLAND CEMENT CONCRETE MEDIAN SURFACE - 4"
8. PROPOSED HMA SURFACE COURSE - 1 1/2 "
9. PROPOSED LEVELING BINDER - 1"
10. PROPOSED HMA BINDER COURSE - VARIES FROM 1.25" TO 36.2" Δ1
11. PROPOSED HMA BASE COURSE - 11"
12. PROPOSED HMA BASE COURSE - 10"
13. PROPOSED HMA SHOULDER
14. PROPOSED COMBINATION CURB AND GUTTER, TYPE B-9.06
15. PROPOSED CONCRETE MEDIAN SURFACE - 4"
16. PROPOSED GUARDRAIL
17. PROPOSED AGGREGATE WEDGE SHOULDER, TYPE B
18. PROPOSED PAVED SHOULDER REMOVAL
19. PROPOSED PAVEMENT REMOVAL (AFTER STAGE CONSTRUCTION) Δ1

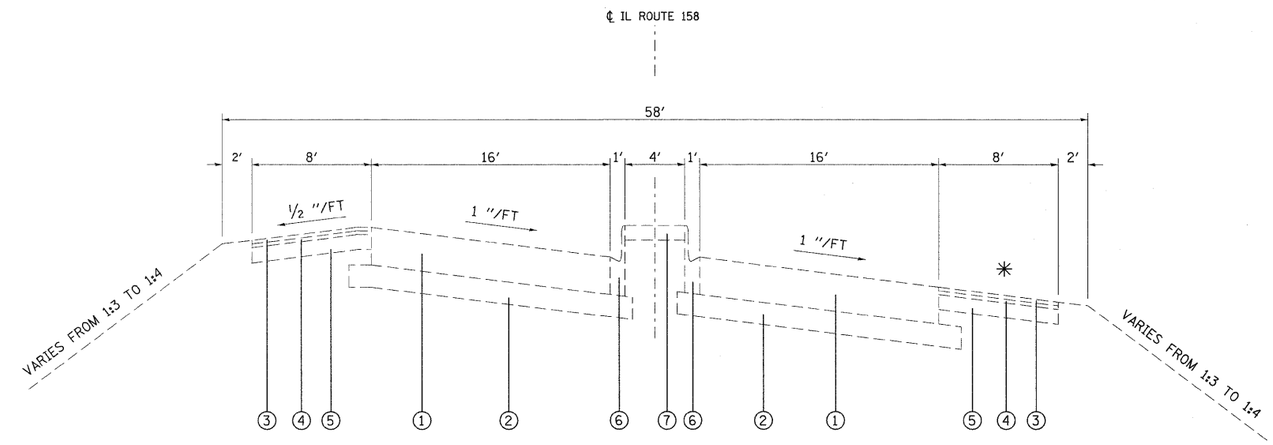

EXISTING SUPERELEVATED TYPICAL SECTION

STA 117+55.54 TO STA 127+20

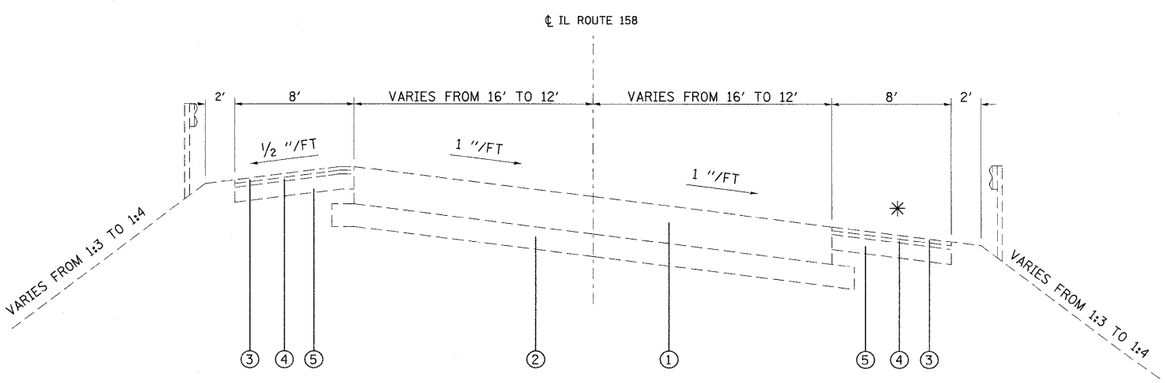

EXISTING SUPERELEVATED TYPICAL SECTION

STA 127+20 TO STA 129+21.79

STA 129+27.56 TO STA 138+50.58 Δ1

GUARDRAIL:

STA 127+20 TO STA 128+77

✳ ON THE INSIDE OF THE CURVE THE SHOULDER SLOPE SHALL BE THE SAME AS THE PAVEMENT SUPERELEVATION WITH A MINIMUM SLOPE OF ½" PER FOOT.

NOTE:
EXISTING STRUCTURE FROM STA 109+80 TO STA 112+00

Δ1 Rev. 2-11-10

FILE NAME = c:\pw_work_wsdot\owenbj\dms52558\pln00506a.dgn	USER NAME = owenbj	DESIGNED -	REVISED -	STATE OF ILLINOIS DEPARTMENT OF TRANSPORTATION	EXISTING TYPICAL SECTIONS	F.A.P. RTE.	SECTION	COUNTY	TOTAL SHEETS	SHEET NO.
	PLOT SCALE = 50.0000 ' / IN.	DRAWN -	REVISED -			809	67-1HBR	MONROE	144	6
	PLOT DATE = 2/5/2010	CHECKED -	REVISED -					CONTRACT NO. 76977		
		DATE -	REVISED -		SCALE: SHEET NO. OF SHEETS STA. TO STA.	FED. ROAD DIST. NO.	ILLINOIS	FED. AID PROJECT		