STATE OF ILLINOIS
DEPARTMENT OF TRANSPORTATION

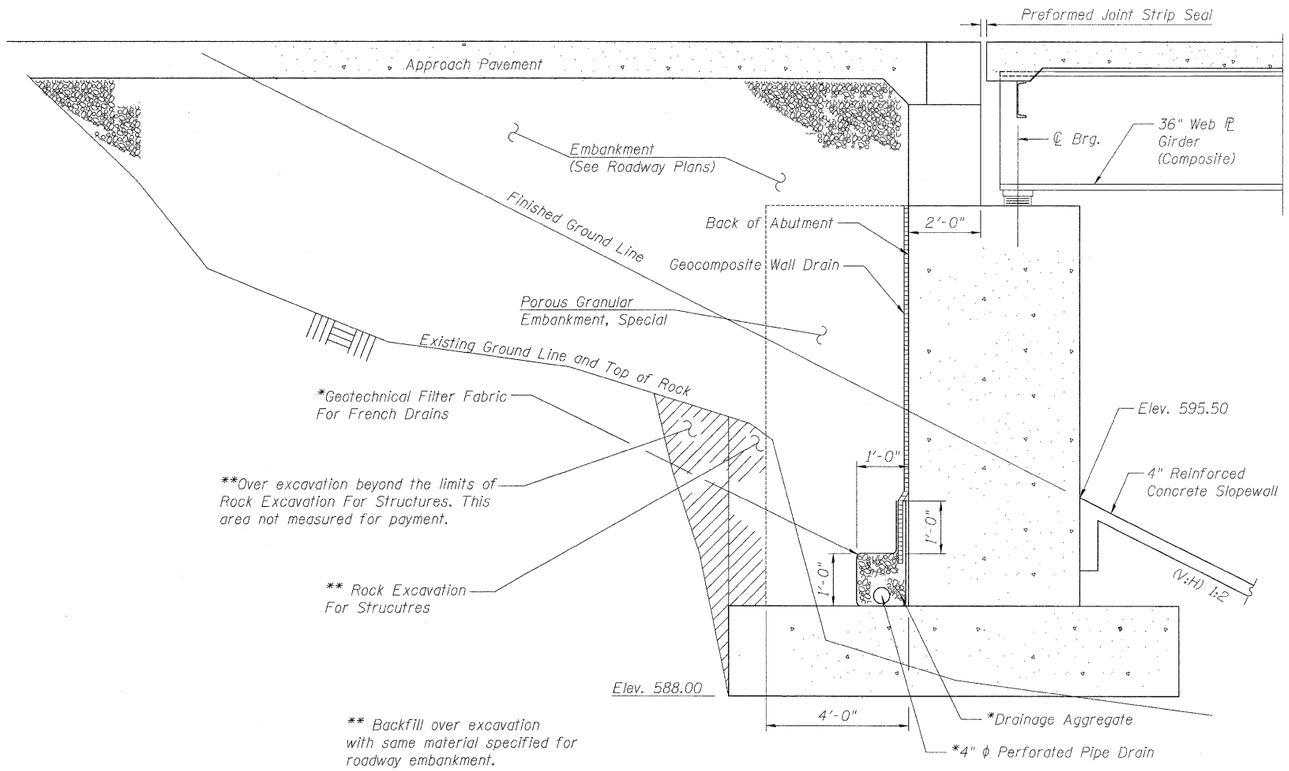

SECTION THRU WEST ABUTMENT
(Horiz. dim. @ Rt. L's)

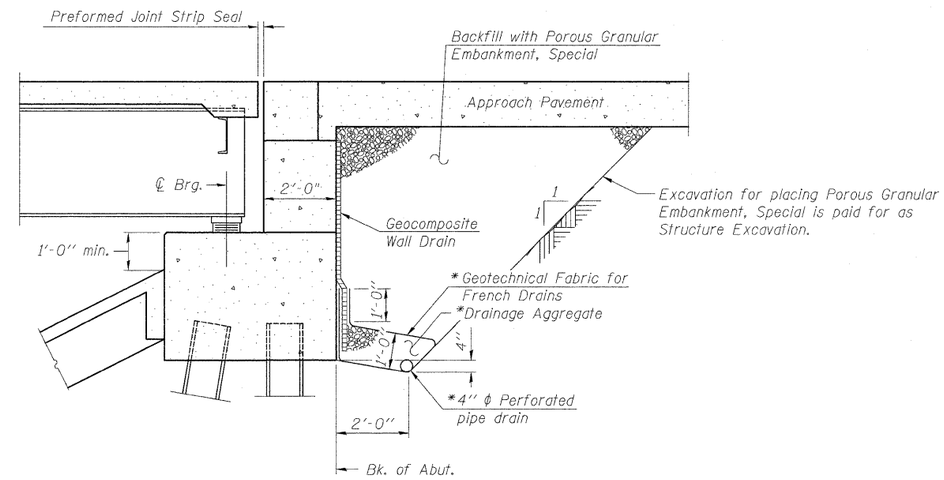

SECTION THRU EAST ABUTMENT
(Horiz. dim. @ Rt. L's)

* Included in the cost of Pipe Underdrains for Structures.

Notes:
All drainage system components shall extend parallel to the abutment back wall until they intersect the wingwalls or 2'-0" from the end of the wingwalls when the wings are parallel to the abutment. A non-perforated outlet pipe shall extend through the wingwall, until intersecting the side slopes. The pipes shall drain into concrete headwalls. (See Article 601.05 of the Standard Specifications and Highway Standard 601101).

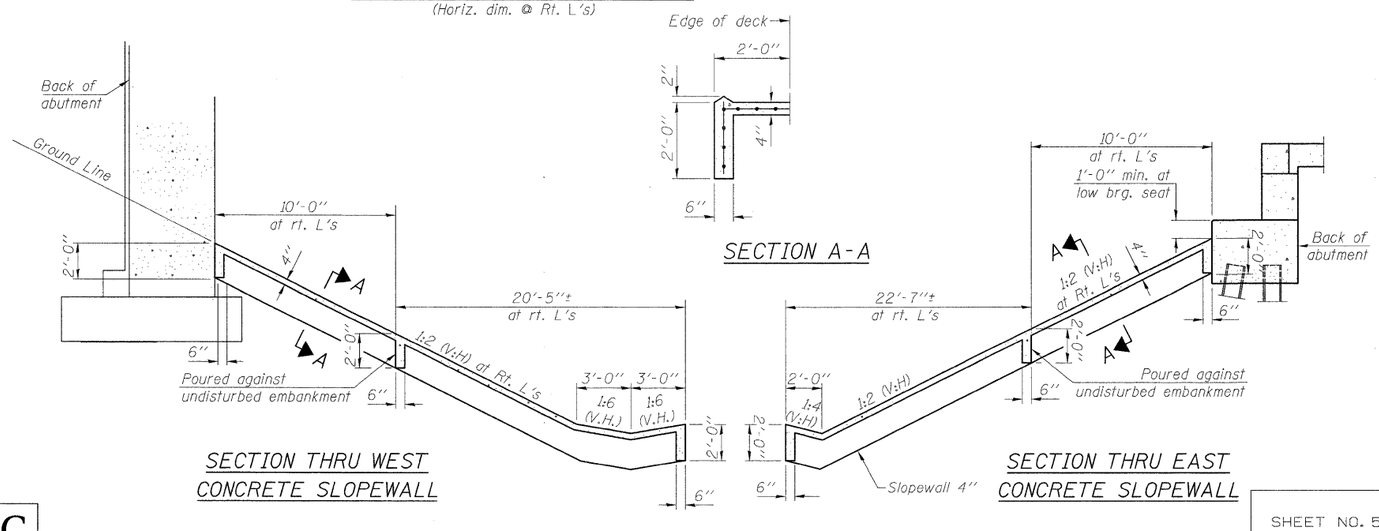

SECTION THRU WEST
CONCRETE SLOPEWALL

SECTION THRU EAST
CONCRETE SLOPEWALL

Notes:
1. Slopewall shall be reinforced with welded wire fabric 6 in. x 6 in. - W4.0 x W4.0 weighing 58 lbs. per 100 sq.ft.

SLOPEWALL & SECTION THRU
ABUTMENTS DETAILS
STRUCTURE NO. 067-0042

DESIGNED	JPM
CHECKED	WPM
DRAWN	GAP
CHECKED	JPM, WPM

9-28-09

MACTEC

SHEET NO. 5	F.A.P RTE.	SECTION	COUNTY	TOTAL SHEETS	SHEET NO.
34 SHEETS	809	67-1HBR	Monroe	144	69
			CONTRACT NO. 76977		
	FED. ROAD DIST. NO. 7	ILLINOIS	FED. AID PROJECT		