BUTT JOINT

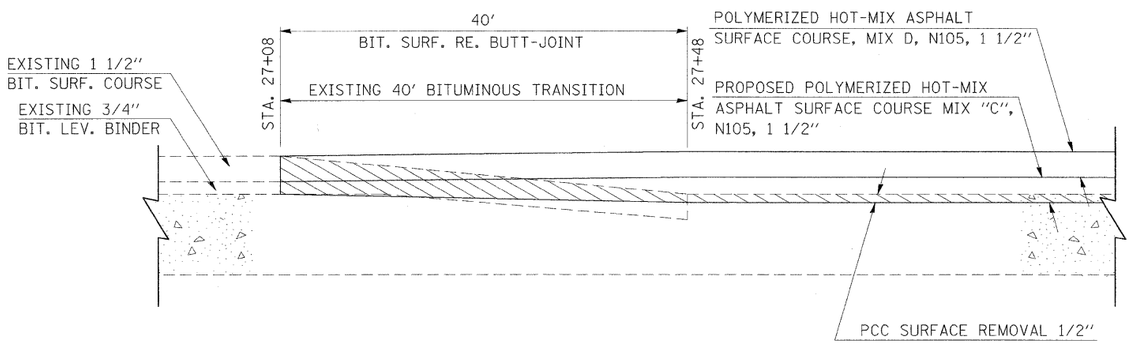

TO BE USED AT STATIONS:

27+08 TO 27+48 (IL 148)
63+11.5 TO 63+51.5 (IL 37)

NOTE: BINDER MUST TAPER FROM 1 1/2" TO 3/4"
STA. 27+48 TO 27+08

BUTT JOINT

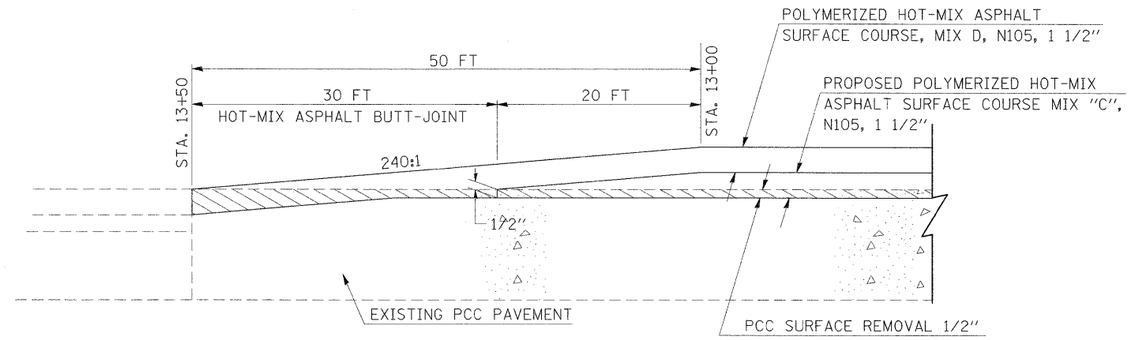

TO BE USED AT STATIONS:

13+00 TO 13+50 (IL 37)

DETAIL OF AGGREGATE PRIVATE ENTRANCE

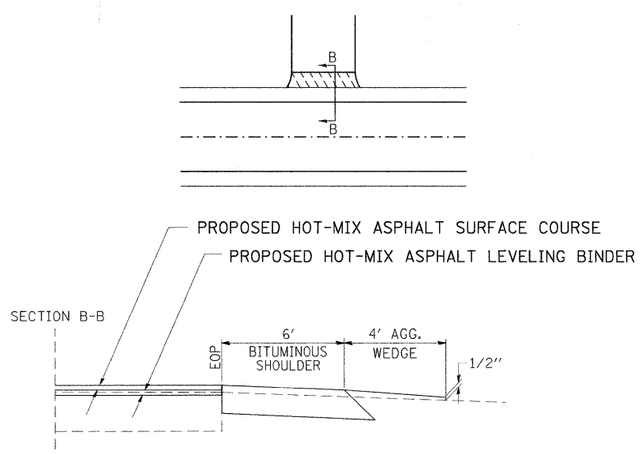

PREPARATION OF EXISTING SURFACE AND ANY EXCAVATION FOR ENTRANCES SHALL BE IN ACCORDANCE WITH ARTICLE 406.09 OF THE STANDARD SPECIFICATIONS.

DETAIL OF AGGREGATE OR OIL AND CHIP SIDEROAD

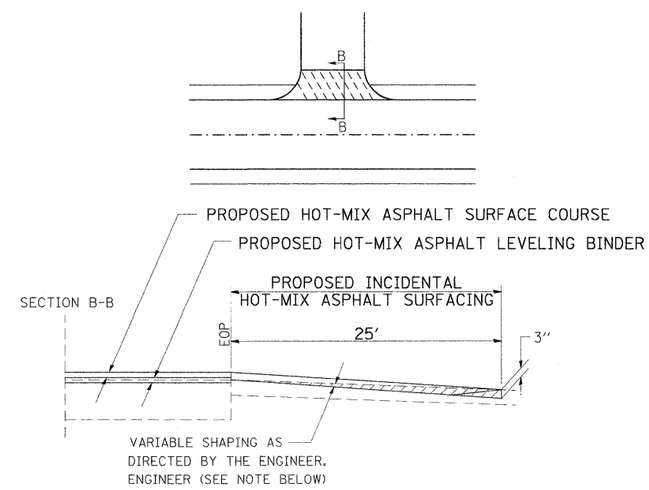

IF EXISTING SUB-BASE IS INADEQUATE, AS DETERMINED BY THE ENGINEER, THE SIDEROADS SHALL BE CORED OUT AND AGGREGATE SUB-BASE, TYPE B SHALL BE PLACED FOR BASE. THE COST OF CORING OUT THE SIDEROAD AND THE AGGREGATE BASE COURSE SHALL BE PAID FOR ACCORDING TO ARTICLE 109.04. THE AGGREGATE SUB-BASE SHALL BE CONSTRUCTED ACCORDING TO ARTICLE 406.09. VARIABLE SHAPING IS INCLUDED IN THE COST OF INCIDENTAL BITUMINOUS SURFACING.