F.A. RTE.	SECTION	COUNTY	TOTAL SHEETS	SHEET NO.
1324	03-00097-01-PV	COOK	82	13
STA.		TO STA.		
FED. ROAD DIST. NO.	ILLINOIS	FED. AID PROJECT		

CONTRACT 83971

LEGEND

- HOT-MIX ASPHALT SURFACE REMOVAL
- SIDEWALK REMOVAL
- DRIVEWAY REMOVAL
- CURB AND GUTTER REMOVAL
- PROPOSED HMA SURFACE COURSE
- PROPOSED P.C.C. SIDEWALK

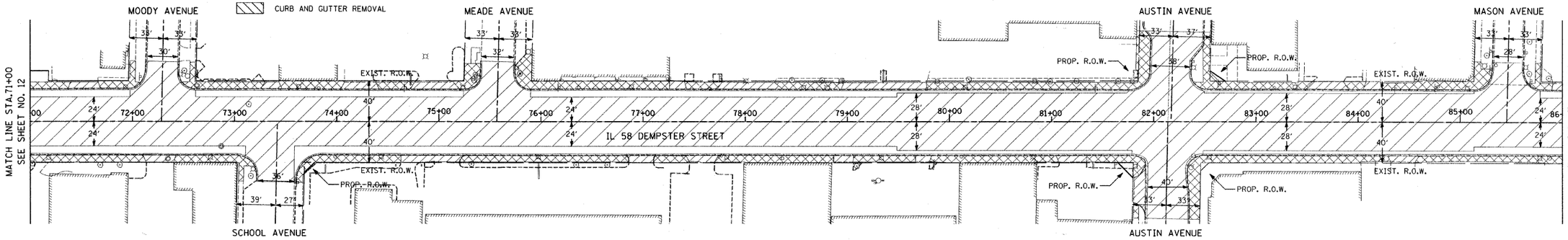

EXISTING CONDITIONS

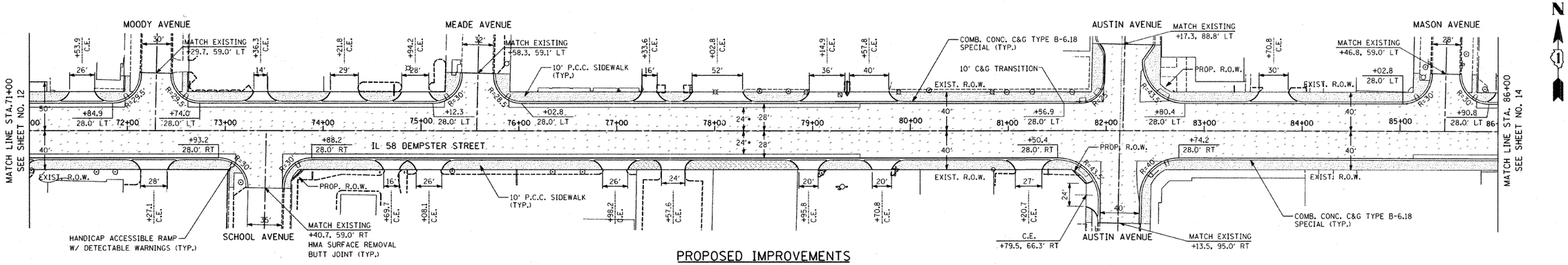

PROPOSED IMPROVEMENTS

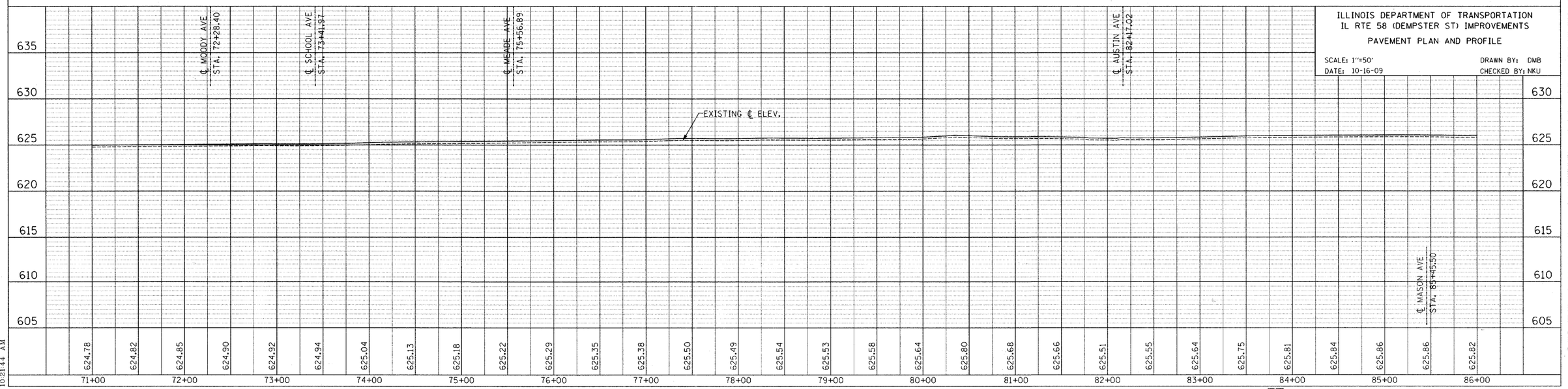

ILLINOIS DEPARTMENT OF TRANSPORTATION
IL RTE 58 (DEMPSTER ST) IMPROVEMENTS
PAVEMENT PLAN AND PROFILE

SCALE: 1"=50'
DATE: 10-16-09
DRAWN BY: DMB
CHECKED BY: NKU

PLAN: SURVEYED, PLOTTED, ALIGNMENT CHECKED, RT. OF WAY CHECKED, CADD FILE NAME, NOTE BOOK NO., BY, DATE

PROFILE: SURVEYED, PLOTTED, GRADES CHECKED, B.M. NOTED, STRUCTURE NOTATNS CHKD, NOTE BOOK NO., BY, DATE

$FILE$
1/29/2010
10:21:44 AM

McDonough Associates Inc.
Engineers / Architects