F.A.U. RTE.	SECTION	COUNTY	TOTAL SHEETS	SHEET NO.
1324	03-00097-01-PV	COOK	82	66
STA. _____		TO STA._____		
FED. ROAD DIST. NO. _	ILLINOIS	FED. AID PROJECT		

CONTRACT # 83971

LIGHT POLE FOUNDATION NOTES:

1. MINIMUM UNCONFINED COMPRESSIVE STRENGTH FOR COHESIVE SOILS Q_U = .8 TONS PER SQ. FT. MINIMUM STANDARD PENETRATION TEST VALUE FOR GRANULAR SOILS N = 10 BLOWS PER FOOT.
2. MINIMUM COMPRESSIVE STRENGTH FOR CONCRETE SHALL BE 3500 PSI AT THE END OF 28 DAYS.
3. ALL REINFORCEMENT SHALL BE EPOXY COATED WITH A MINIMUM YIELD POINT OF 60,000 PSI.
4. THE ANCHOR BOLTS AND RACEWAYS SHALL BE PROPERLY SECURED IN PLACE BEFORE THE CONCRETE IS PLACED IN FORMS.

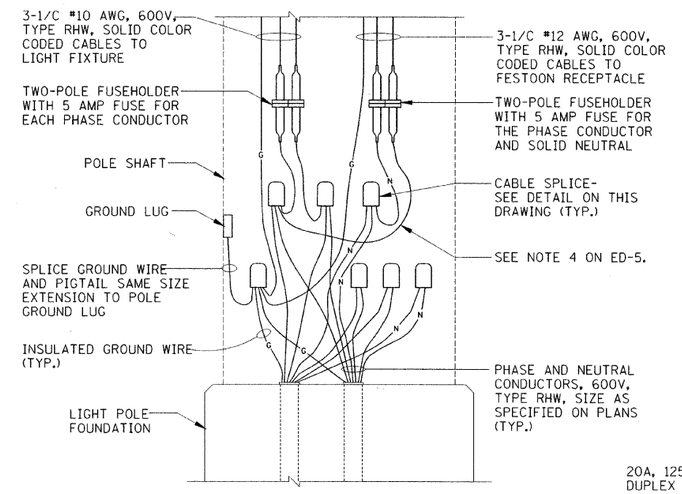

1 TYPICAL LIGHT POLE BASE WIRING DETAIL

N.T.S.

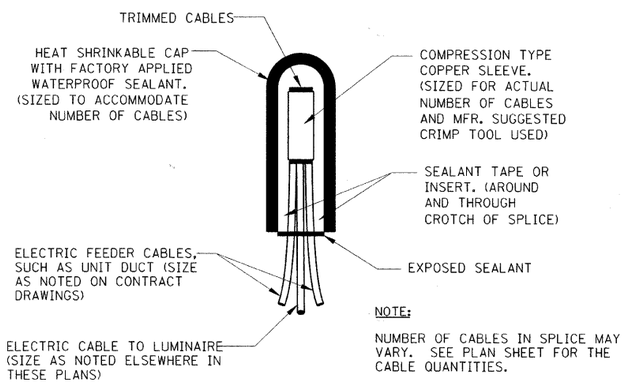

NOTE:

NUMBER OF CABLES IN SPLICE MAY VARY. SEE PLAN SHEET FOR THE CABLE QUANTITIES.

2 TYPICAL SPLICE DETAIL

N.T.S.

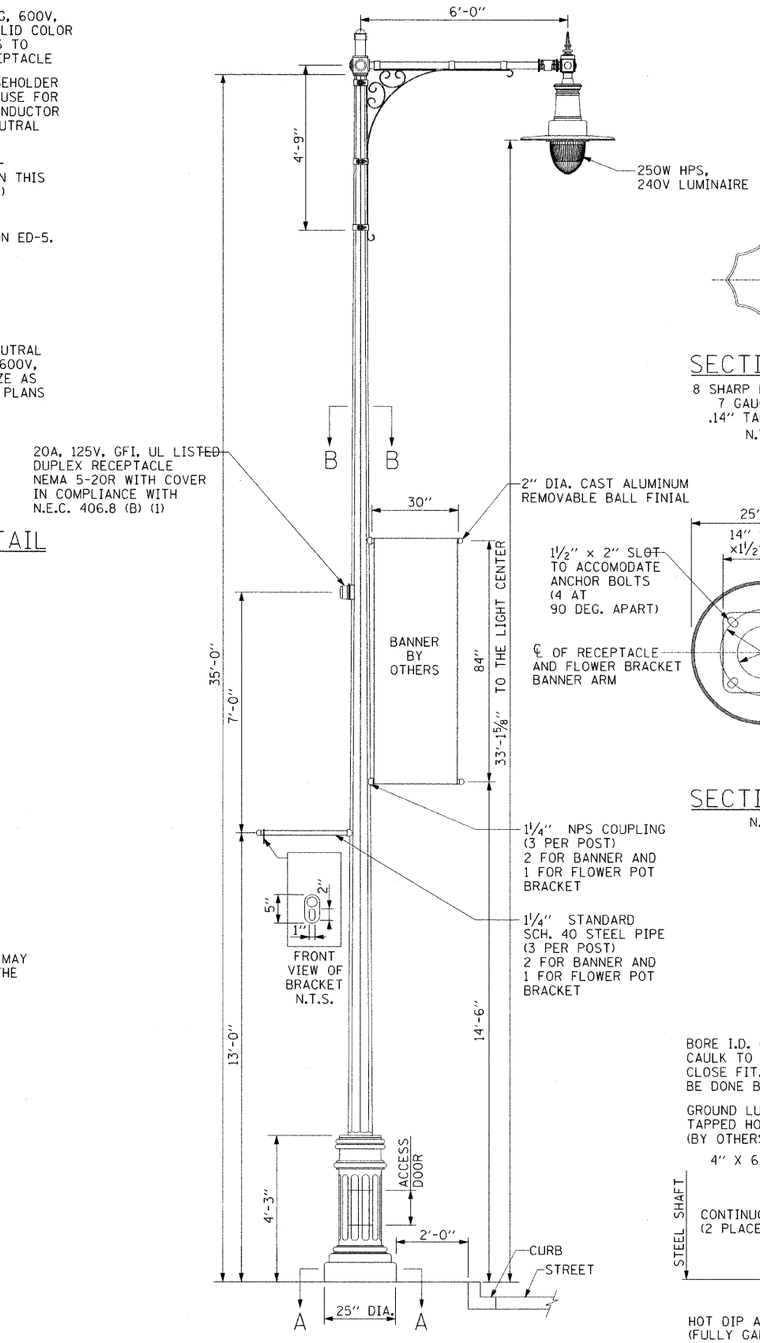

4 LIGHT POLE TYPE "A" DETAIL

N.T.S.

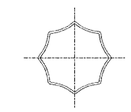

SECTION B-B

8 SHARP FLUTE STEEL
7 GAUGE STEEL
.14" TAPER PER FT
N.T.S.

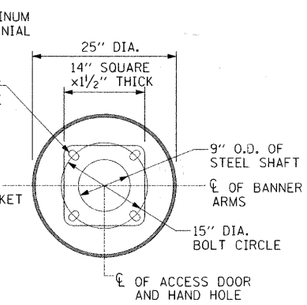

SECTION A-A

N.T.S.

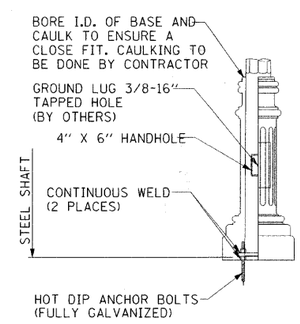

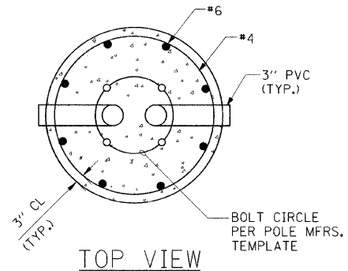

TOP VIEW

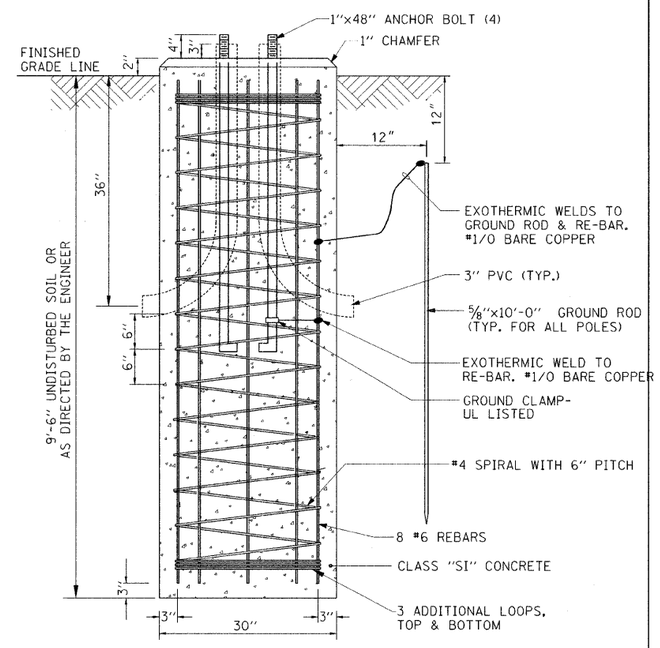

ELEVATION

3 LIGHT POLE TYPE "A" FOUNDATION DETAIL

N.T.S.

(SEE NOTES 1 THROUGH 4)

ED-1

REVISIONS	
NAME	DATE

ILLINOIS DEPARTMENT OF TRANSPORTATION
IL RTE 58 (DEMPSTER ST) IMPROVEMENTS

LIGHT UNIT TYPE "A" AND WIRING DETAILS

SCALE: NONE — DRAWN BY:

DATE: 10-16-09 — CHECKED BY:

McDonough Associates Inc.
Engineers / Architects