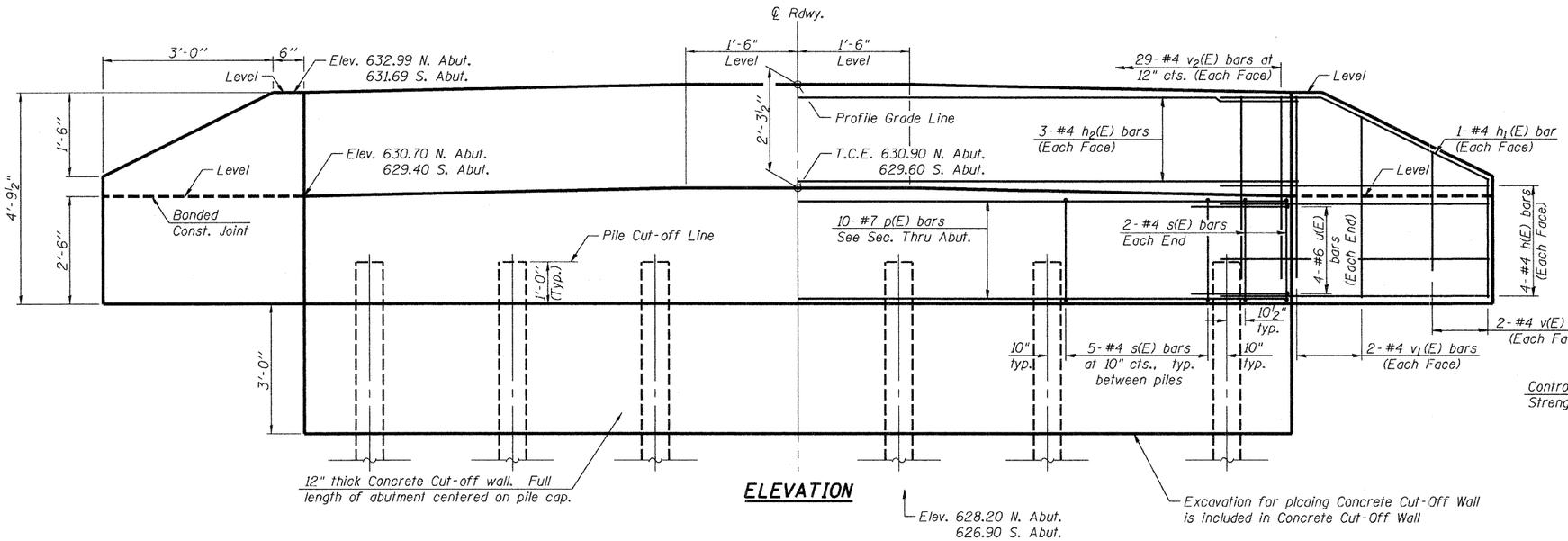

ELEVATION

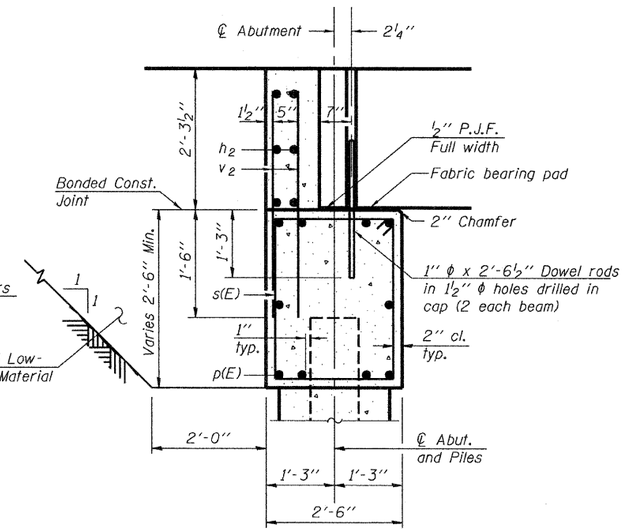

SEC. THRU ABUT.

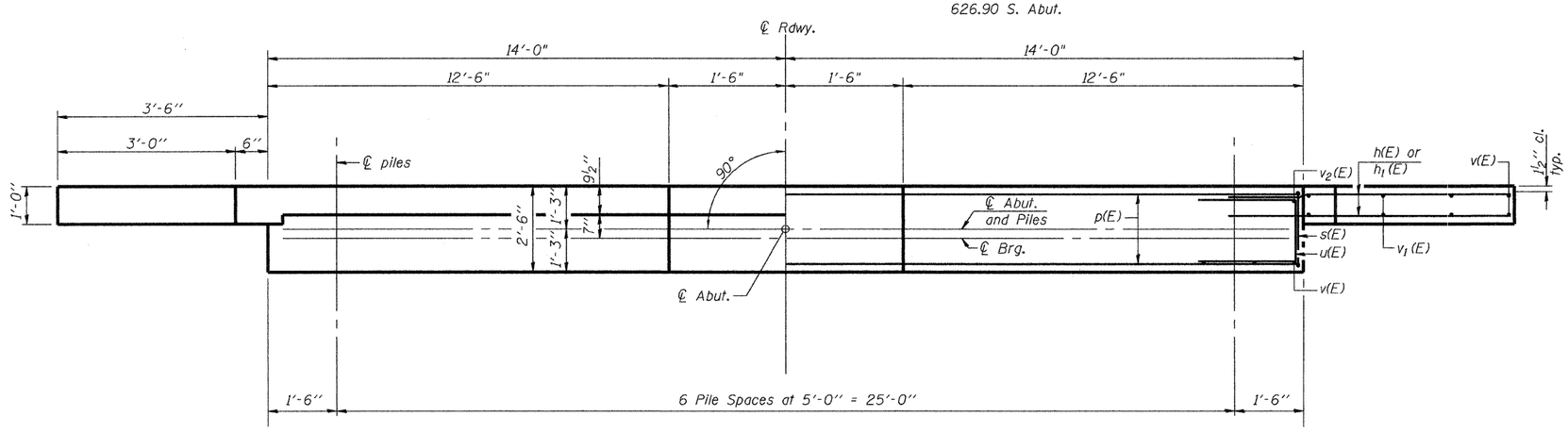

PLAN

BILL OF MATERIAL
TWO ABUTMENTS

Bar	No.	Size	Length	Shape
h(E)	32	#4	5'-0"	
h1(E)	8	#4	5'-3"	
h2(E)	12	#4	27'-8"	
p(E)	20	#7	27'-8"	
s(E)	58	#4	9'-5"	
u(E)	16	#6	11'-1"	
v(E)	16	#4	3'-0"	
v1(E)	16	#4	4'-2"	
v2(E)	116	#4	3'-11"	
Structure Excavation			Cu. Yd.	76.5
Concrete Structures			Cu. Yd.	19.4
Reinforcement Bars, Epoxy Coated			Pound	2500
Furnishing Steel Piles HP 12x53			Foot	425
Driving Piles			Foot	425
Concrete Cut-off Wall			Cu. Yd.	6.2
Test Piles Steel HP 12x53			Each	2
Controlled Low-Strength Material			Cu. Yd.	45.2

PILE DATA (2-ABUTS.)

Type	STEEL HP 12x53
Nominal Required Bearing	319 kips
Factored Resistance Available	160 kips
Estimated Pile Length	43 Feet North Abut. and 42 Feet South Abut.
Number of Production Piles	10
Number of Test Piles	2 (1 In Each Abutment)

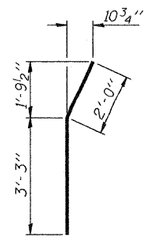

BAR h1(E)

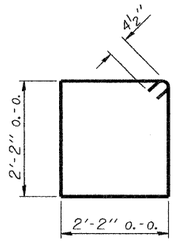

BAR s(E)

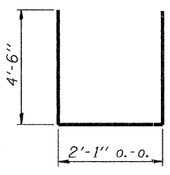

BAR u(E)

Notes

The Backwall and the portion of the Wingwalls above the bonded construction joint shall be cast against the in-place beam.

Space reinforcement in cap to miss anchor bolts.

ESI CONSULTANTS, LTD
753 WINDSOR ROAD
CHARLESTON, IL 61920
(217) 345-1810
WWW.ESICONSULTANTSLTD.COM
ILLINOIS DEPARTMENT OF PROFESSIONAL REGULATION REGISTRATION #184-003686

ABUTMENT DETAILS
TR 427 OVER FAYETTE CREEK

DATE: 11-03-09 DRAWN BY: JEH CHECKED BY: DF

SHEET NO. 5 OF 7 SHEETS	F.A. RTE.	SECTION	COUNTY	TOTAL SHEETS	SHEET NO.
	-	01-03130-00-BR	VERMILION	17	9
		SN 092-3493	CONTRACT NO. 91366		
	FED. ROAD DIST. NO. -	ILLINOIS	FED. AID PROJECT		

PRINTED DATE: 11/19/2009
FILE NAME: = IN PROJECTS\Vermilion County of\TR 427 over Fayette Creek\CADD\Drawings\Sheets\09_ABUT DET_VermCo_TR427.dgn