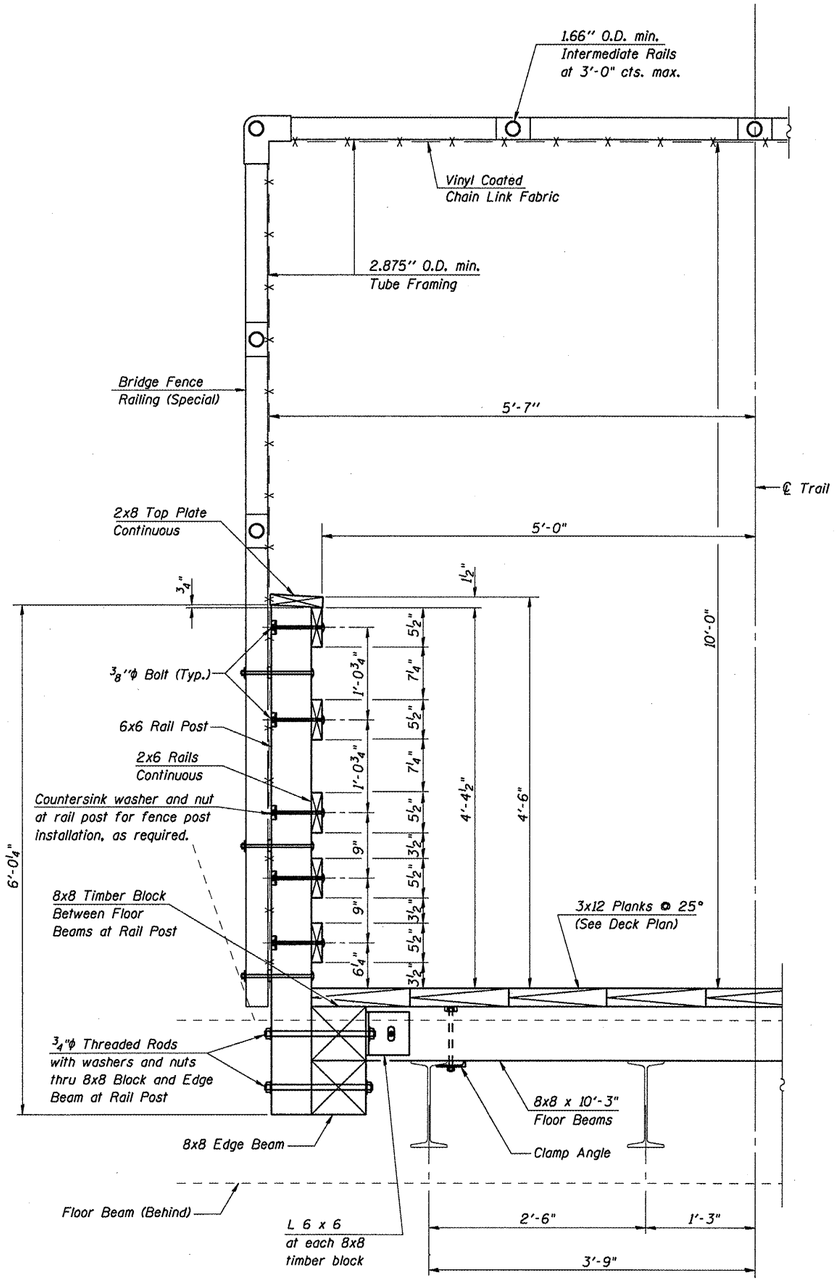

SECTION AT RAIL POST

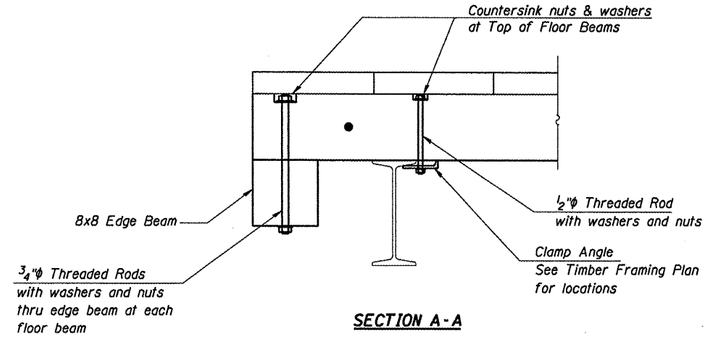

SECTION A-A

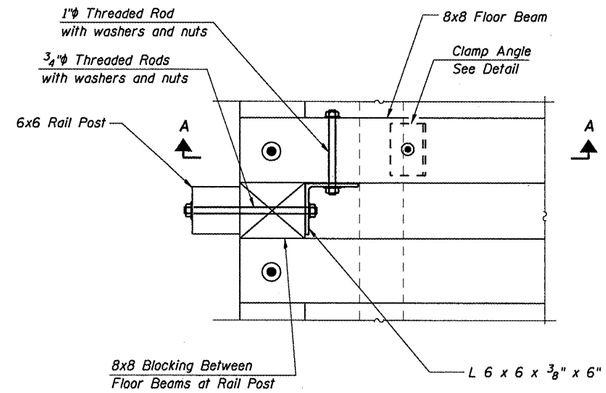

PLAN AT RAIL POST
(Deck Planks Not Shown)

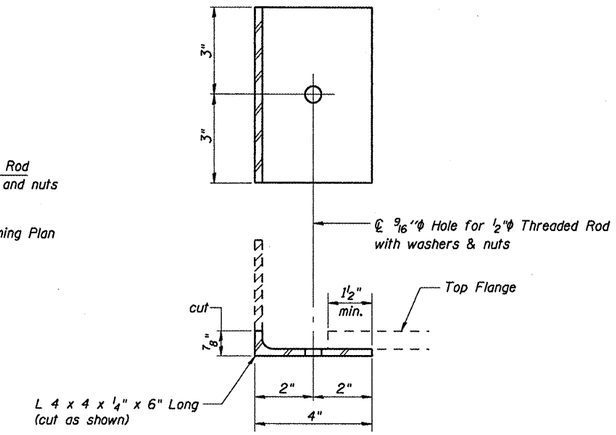

CLAMP ANGLE *
(32 Required)

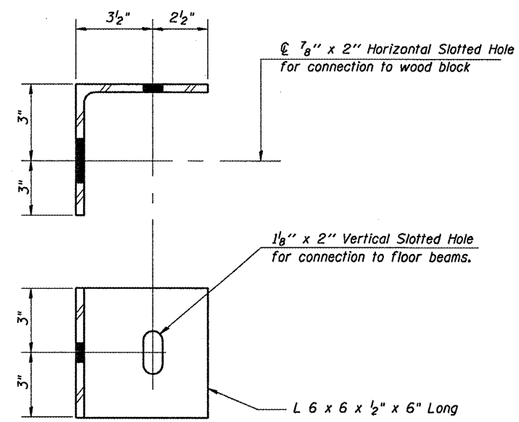

L 6 x 6
TIMBER BLOCK ANGLE *
(16 Required)

* Weight of angles included in the weight of Hardware.

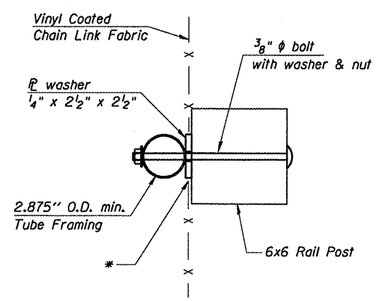

FENCE ATTACHMENT DETAIL

* Cut and Knuckle chain link fabric as required.

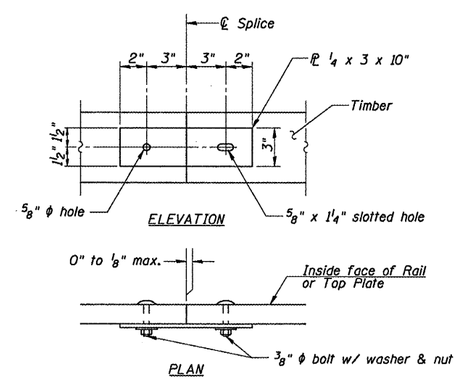

SPLICE DETAIL

Note: Minimize splices in rails and top plate. Where possible span 3 rail posts.

TIMBER DETAILS
SANGAMON VALLEY TRAIL
OVER JEFFERSON STREET (IL ROUTE 97)
SVT BRIDGE NO. 15
STRUCTURE NO. 084-9936

CEC Cummins Engineering Corporation
Civil and Structural Engineering

JOB = 2192		DESIGNED	M.D.C.
FILE = 2192jeff_super		CHECKED	A.A.N.
DATE = 10/30/2009		DRAWN	T.S.H.
		CHECKED	M.D.C.

Sheet 5 of 6	RTE.	SECTION	COUNTY	TOTAL SHEETS	SHEET NO.
	SVT	05-00173-00-BT	SANGAMON	173	111
	SANGAMON VALLEY TRAIL		CONTRACT NO.		
	FED. ROAD DIST. NO. 6	ILLINOIS	FED. AID PROJECT		

93522