| PLAN | | BY | DATE |
|---|---|---|---|
| NOTE BOOK NO. ____ | SURVEYED<br>PLOTTED<br>ALIGNMENT CHECKED<br>RT. OF WAY MARKED<br>CADD FILE NAME ____ | | |

| PROFILE | | BY | DATE |
|---|---|---|---|
| NOTE BOOK NO. ____ | SURVEYED<br>PLOTTED<br>GRADES CHECKED<br>B.M. NOTED<br>STRUCTURE NOTATNS CHKD | | |

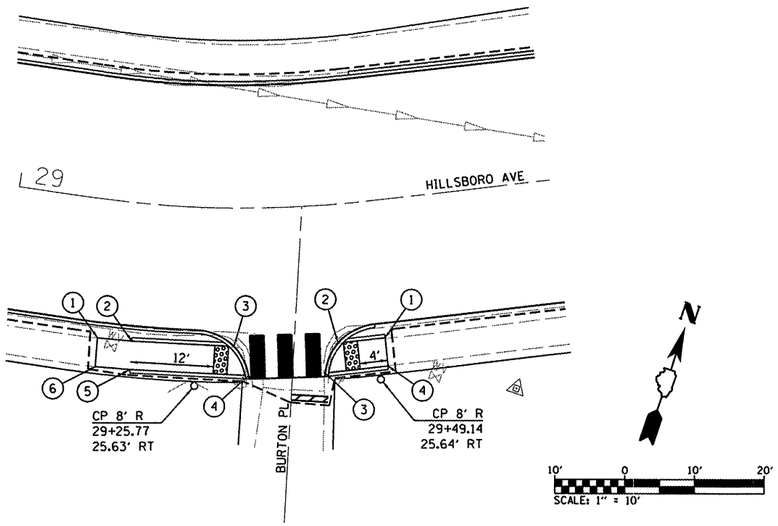


## HILLSBORO AVE AND BURTON PL

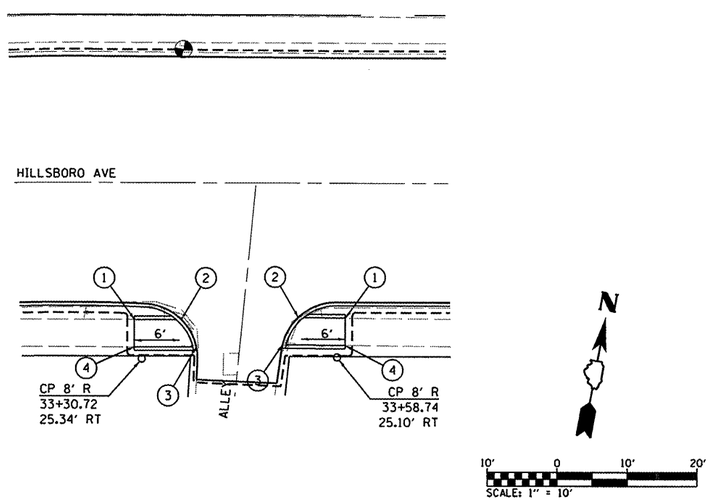


## HILLSBORO AVE AND ALLEY

### SW RADIUS RETURN

| PT. NO. | STATION | OFFSET | ELEVATION | |
|---|---|---|---|---|
| 1 | 29+13.77 | 19.94' RT | 526.68 | (SW) |
| 2 | 29+18.13 | 19.90' RT | 526.58 | (SW) |
| 3 | 29+31.17 | 19.90' RT | 525.58 | (EOP) |
| | | | 526.00 | (BC) |
| 4 | 29+33.04 | 24.01' RT | 525.66 | (EOP) |
| 5 | 29+18.25 | 23.90' RT | 526.66 | (SW) |
| 6 | 29+13.94 | 24.01' RT | 526.76 | (SW) |

### SE RADIUS RETURN

| PT. NO. | STATION | OFFSET | ELEVATION | |
|---|---|---|---|---|
| 1 | 29+50.40 | 19.83' RT | 525.40 | (SW) |
| 2 | 29+44.38 | 19.94' RT | 525.20 | (EOP) |
| | | | 525.53 | (BC) |
| 3 | 29+42.53 | 24.04' RT | 525.28 | (EOP) |
| 4 | 29+50.37 | 23.83' RT | 525.48 | (SW) |

### SW RADIUS RETURN

| PT. NO. | STATION | OFFSET | ELEVATION | |
|---|---|---|---|---|
| 1 | 33+29.64 | 19.68' RT | 516.54 | (SW) |
| 2 | 33+36.37 | 19.68' RT | 516.24 | (EOP) |
| | | | 516.67 | (BC) |
| 3 | 33+38.55 | 23.68' RT | 516.20 | (EOP) |
| 4 | 33+29.64 | 23.68' RT | 516.62 | (SW) |

### SE RADIUS RETURN

| PT. NO. | STATION | OFFSET | ELEVATION | |
|---|---|---|---|---|
| 1 | 33+59.92 | 19.40' RT | 516.98 | (SW) |
| 2 | 33+53.18 | 19.34' RT | 516.50 | (EOP) |
| | | | 516.83 | (BC) |
| 3 | 33+50.94 | 23.32' RT | 516.42 | (EOP) |
| 4 | 33+59.89 | 23.40' RT | 517.06 | (SW) |