CULVERT INLET PROTECTION

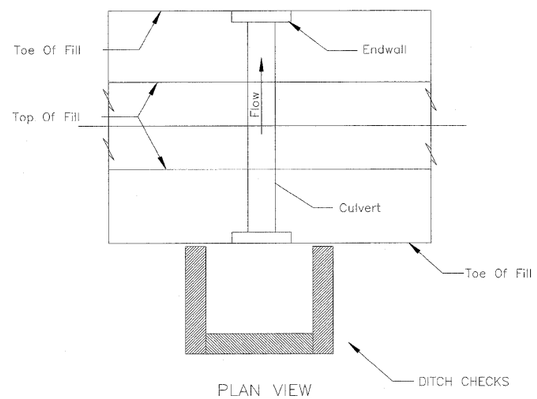

PLAN VIEW

NOTES:

1. Sediment shall be removed when the sediment has accumulated to one-half the height of the stone ditch check dams.
2. The maximum drainage area to the culvert being protected is 1 acre.

EROSION BLANKET PLAN
IL-530

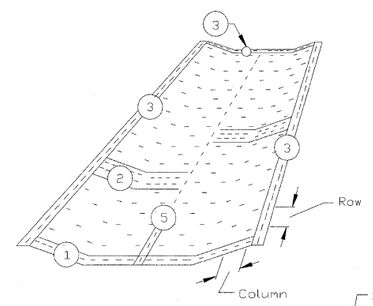

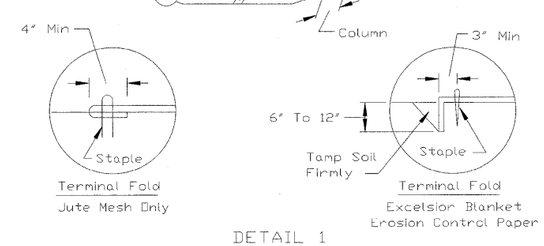

DETAIL 1

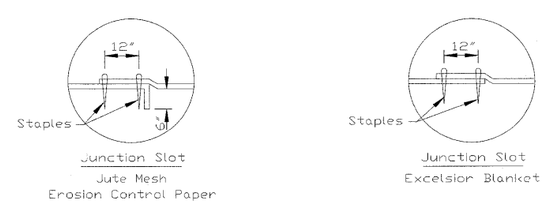

DETAIL 2

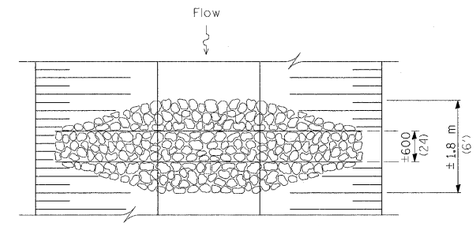

PLAN

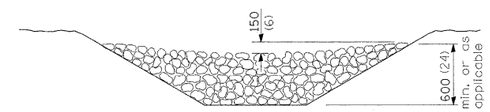

ELEVATION

AGGREGATE DITCH CHECK

Note: Dimensions are in millimeters (inches)

FILE NAME = $FILEL$	USER NAME = $USER$	DESIGNED - MAP	REVISED -	STATE OF ILLINOIS DEPARTMENT OF TRANSPORTATION	EROSION CONTROL PLAN DETAILS	F.A.P. RTE.	SECTION	COUNTY	TOTAL SHEETS	SHEET NO.
		DRAWN - JRH	REVISED -			344	(46-1S&47)WRS-3	LAKE	176	103
	PLOT SCALE = $SCALE$	CHECKED - JW	REVISED -			U.S. ROUTE 45 RECONSTRUCTION		CONTRACT NO. 60957		
	PLOT DATE = $DATE$	DATE - 12-12-08	REVISED -		SCALE: N.T.S. / SHEET NO. 1 OF 3 SHEETS / STA. / TO STA.	FED. ROAD DIST. NO.	ILLINOIS	FED. AID PROJECT		