ROUTE NO.	SECTION	COUNTY	TOTAL SHEETS	SHEET NO.
FAP 348	3128-Z-B-1	Cook	35	19
FED. ROAD DIST. NO. 7	ILLINOIS	FED. AID PROJECT-		

SHEET NO. 4
14 SHEETS

Contract #60D70

NOTES:

Interference is expected from the existing conduit and/or junction boxes at all four corners of the structure. The Traffic Signal Interconnect attached to the west side of the bridge requires special attention, and the Contractor shall refer to Traffic Signal Schematics and Special Provisions. For other conduits, refer to the Special Provision for Roadway Lighting Modifications.

Existing Name Plate at the NW corner shall be protected from damage during construction and incorporated into the new construction. Cost included with Concrete Superstructure.

Interference is expected from the existing bridge rail post. The bridge rail post shall be temporarily supported during rehabilitation. The Post Anchorage Assembly embedded in the Concrete shall be cleaned and incorporated into the new construction. Care shall be taken not to damage the Post Anchorage Assembly. The NW and SE post anchorage assembly may interfere with the joint and may need to be cut in the field. All labor and equipment necessary to clean, cut and incorporate the existing bridge rail post anchorage assembly into the new construction shall be included in the cost for Concrete Superstructure.

See Sheet 10 of 14 for Bearing Details.

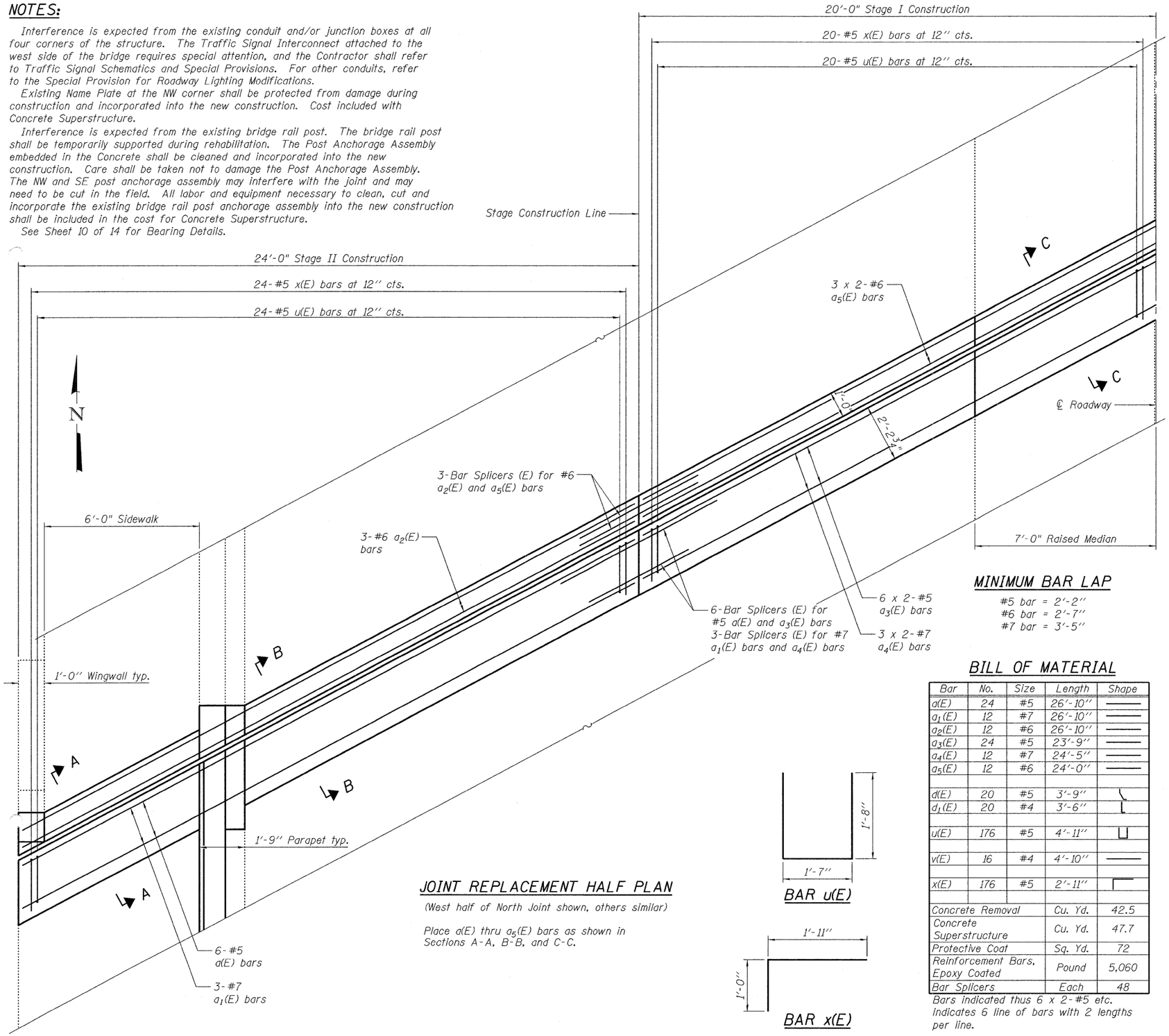

JOINT REPLACEMENT HALF PLAN

(West half of North Joint shown, others similar)

Place a(E) thru a_5(E) bars as shown in Sections A-A, B-B, and C-C.

BAR u(E)

BAR x(E)

MINIMUM BAR LAP

#5 bar = 2'-2"
#6 bar = 2'-7"
#7 bar = 3'-5"

BILL OF MATERIAL

Bar	No.	Size	Length	Shape
a(E)	24	#5	26'-10"	
a_1(E)	12	#7	26'-10"	
a_2(E)	12	#6	26'-10"	
a_3(E)	24	#5	23'-9"	
a_4(E)	12	#7	24'-5"	
a_5(E)	12	#6	24'-0"	
d(E)	20	#5	3'-9"	
d_1(E)	20	#4	3'-6"	
u(E)	176	#5	4'-11"	
v(E)	16	#4	4'-10"	
x(E)	176	#5	2'-11"	
Concrete Removal			Cu. Yd.	42.5
Concrete Superstructure			Cu. Yd.	47.7
Protective Coat			Sq. Yd.	72
Reinforcement Bars, Epoxy Coated			Pound	5,060
Bar Splicers			Each	48

Bars indicated thus 6 x 2-#5 etc. indicates 6 line of bars with 2 lengths per line.

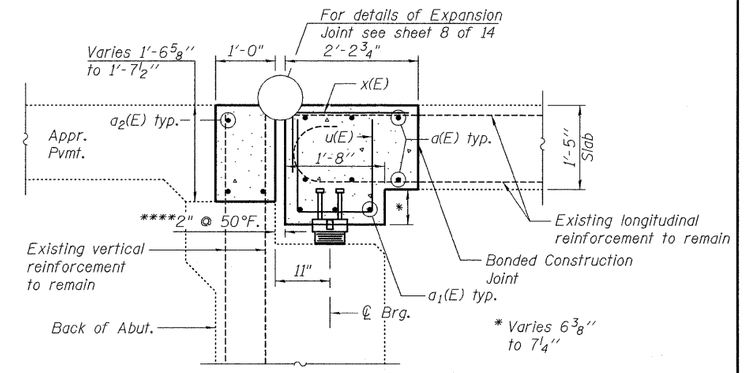

SECTION A-A

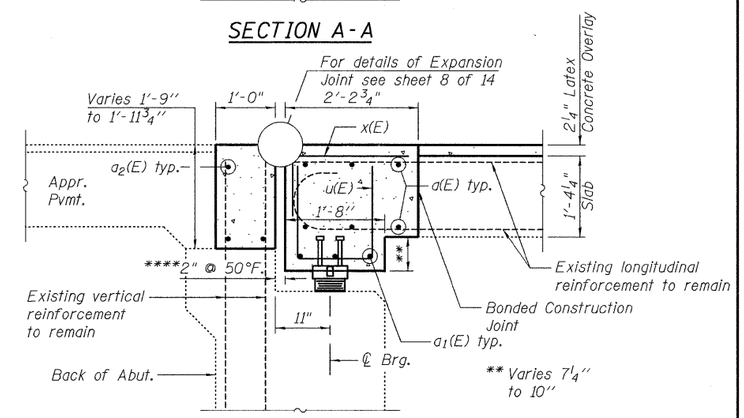

SECTION B-B

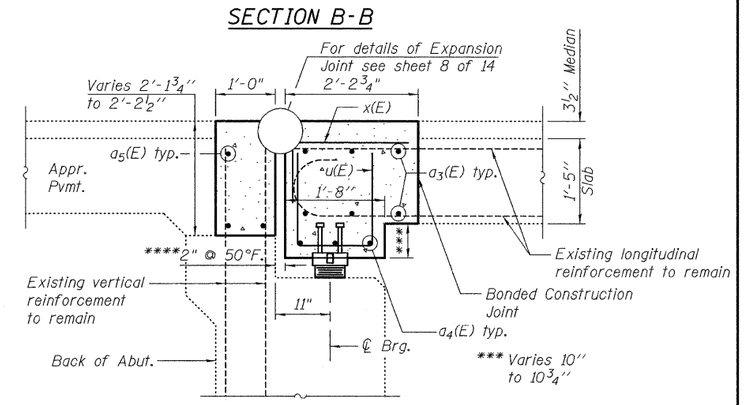

SECTION C-C

****See sheet 8 of 14 for Notes.

rjngroup
Excellence through Ownership
200 West Front Street
Wheaton, IL 60187

ILLINOIS DEPARTMENT OF TRANSPORTATION
EXPANSION JOINT REHABILITATION
AT DECK
IL 43 OVER STONY CREEK
FAP RTE 348 SECTION 3128-Z-B-1
COOK COUNTY
STATION 179+01.40
STRUCTURE NO. 016-0322

DATE: 1-30-2009
DRAWN BY LM
CHECKED BY BLB

2/12/2009 k:\11225982\structures\il 43 over stoney creek\final plans\jcontr.dgn