STATE OF ILLINOIS
DEPARTMENT OF TRANSPORTATION

ROUTE NO.	SECTION	COUNTY	TOTAL SHEETS	SHEET NO.
FAP 9094	*	COOK	246	163
FED. ROAD DIST. # 1		ILLINOIS	FED. AID PROJECT	

*SECT. (202.6 - 2P, ETC, 1415 & 1517) R-7
CONTRACT NUMBER 62408

SHEET NO. 12
20 SHEETS

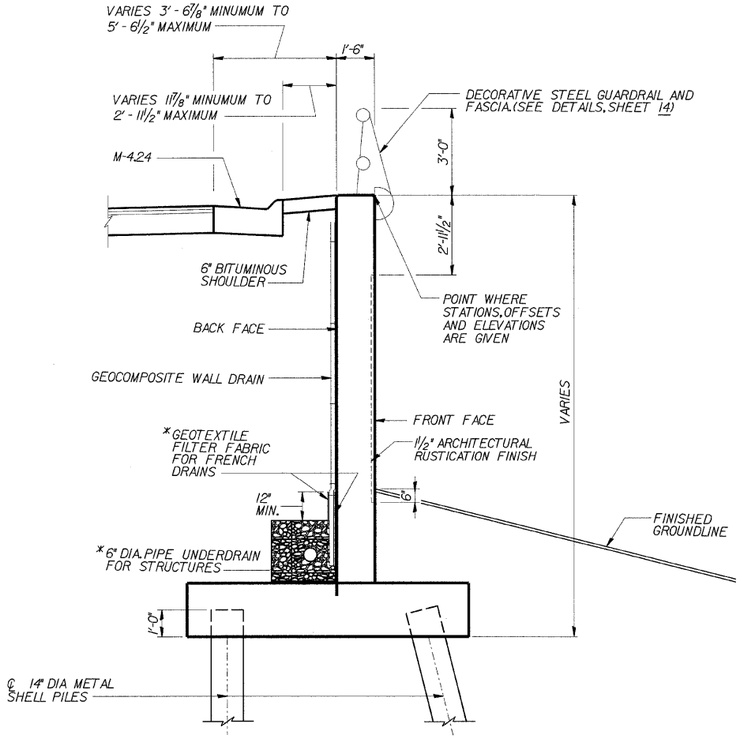

TYPICAL SECTION

*6" PERFORATED PIPE SHALL BE SITUATED WITHIN AN APPROXIMATE 2' X 2' BLOCK OF COARSE AGGREGATE. THE BLOCK OF COARSE AGGREGATE SHALL BE WRAPPED COMPLETELY IN GEOTEXTILE FILTER FABRIC FOR FRENCH DRAINS. A 1'-6" MINIMUM LAP SHALL BE USED WHERE THE FABRIC MUST BE LAPPED. COST OF PERFORATED PIPE, COARSE AGGREGATE, AND GEOTEXTILE FILTER FABRIC IS INCLUDED IN PIPE UNDERDRAINS FOR STRUCTURES 6".

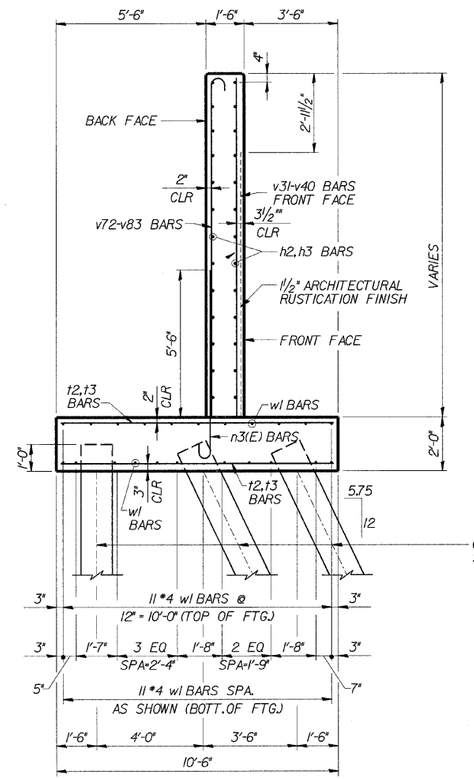

SECTION A-A

STA. 26+57.03 THRU STA. 27+17.03
(FOR DETAILS NOT SHOWN SEE TYPICAL SECTION)

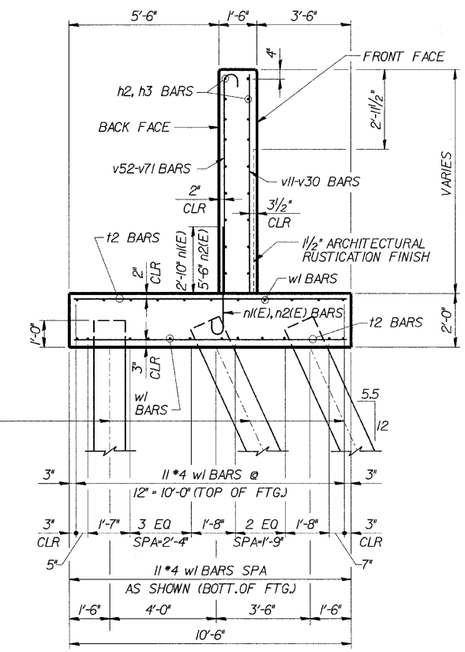

SECTION B-B

STA. 25+37.03 THRU STA. 26+57.03
(FOR DETAILS NOT SHOWN SEE TYPICAL SECTION)

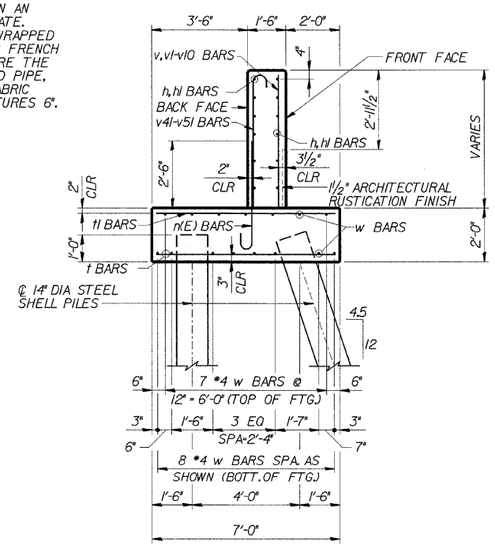

SECTION C-C

STA. 24+70.40 THRU STA. 25+37.03
(FOR DETAILS NOT SHOWN SEE TYPICAL SECTION)

DESIGNED	CMF
CHECKED	LTX
DRAWN	DPW
CHECKED	JMM

DLZ
DLZ Illinois, Inc.
85 W. Algonquin Rd. Ste. 220
Arlington Heights Il 60005

REVISIONS	
NAME	DATE

RETAINING WALL RAMP H
DETAILS
I-90/94 KENNEDY EXPRESSWAY
(HUBBARDS CAVE TO I-290)
SECT. (202.6 - 2P, ETC, 1415 & 1517) R-7
STATION 27+17, LT. 20.5' TO 24+70, LT. 22'
(RAMP F BASELINE)
COOK COUNTY
STRUCTURE NUMBER 016-W808

s:\Dept\Structures\301099 I90 94-rebuild\ILL I90 I94\RAMPH\DGNFILES\12-typeset.dgn
04-Feb-2009 09:36