ORIGINAL SURVEY		BY	DATE
NOTE BOOK NO.	SURVEYED		
	PLOTTED		
	TEMPLATE		
	AREAS		
	AREAS CHECKED		

FINAL SURVEY		BY	DATE
NOTE BOOK NO.	SURVEYED		
	PLOTTED		
	TEMPLATE		
	AREAS		
	AREAS CHECKED		

DLZ

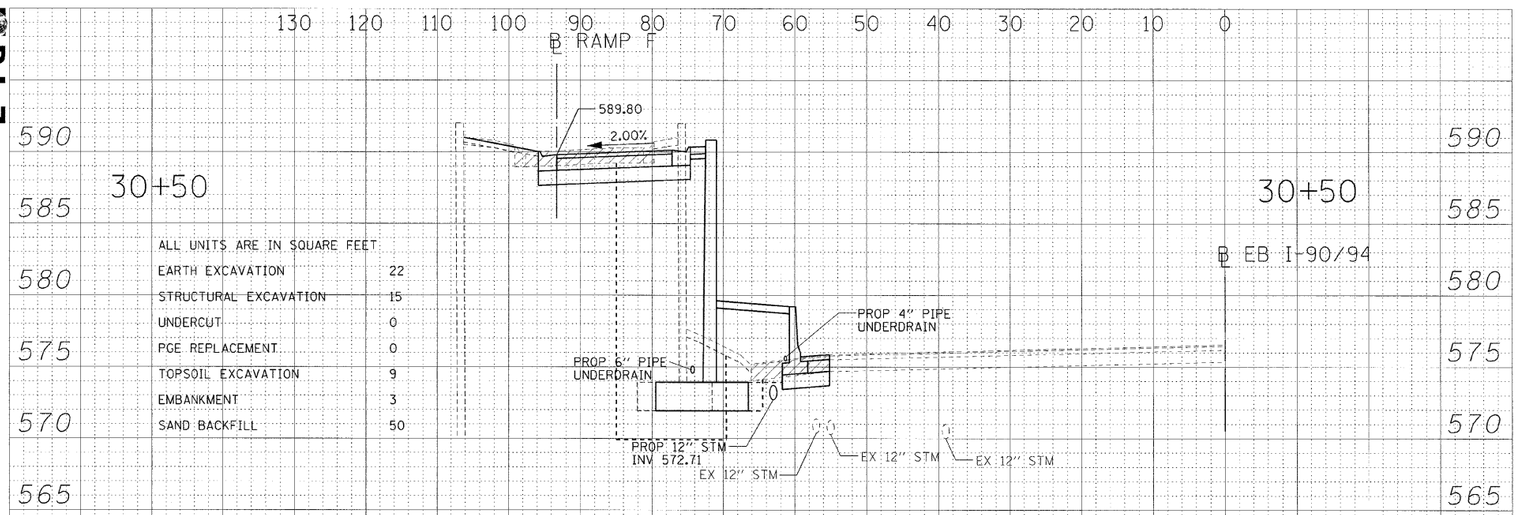

ALL UNITS ARE IN SQUARE FEET

EARTH EXCAVATION	22
STRUCTURAL EXCAVATION	15
UNDERCUT	0
PGE REPLACEMENT	0
TOPSOIL EXCAVATION	9
EMBANKMENT	3
SAND BACKFILL	50

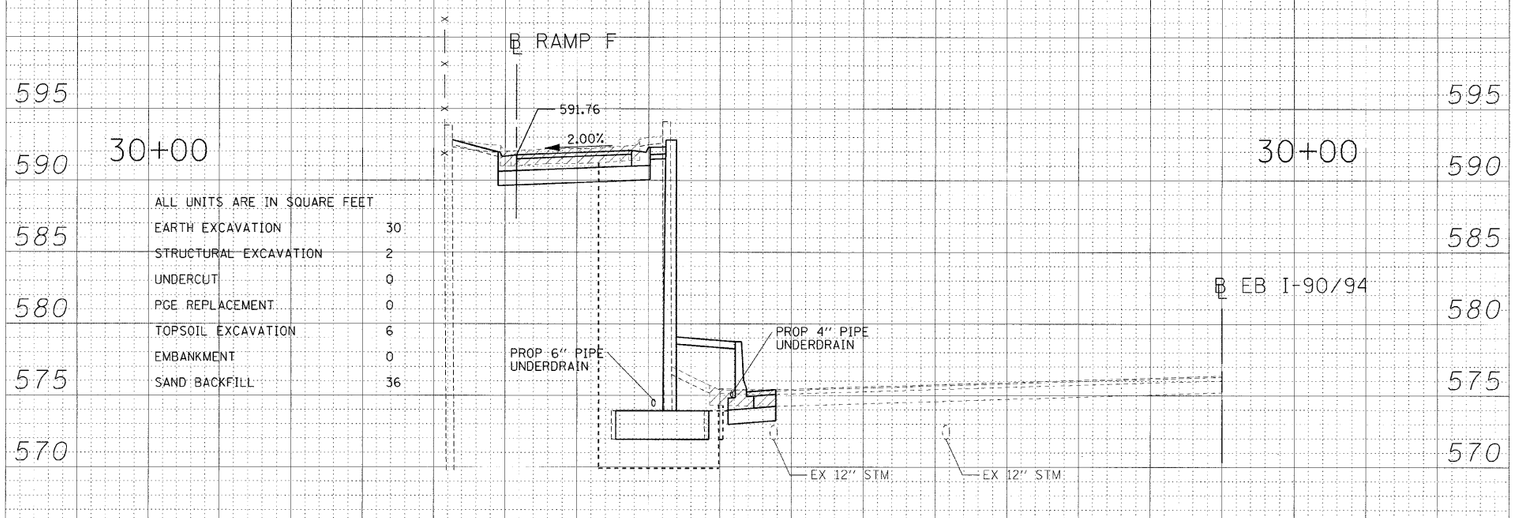

ALL UNITS ARE IN SQUARE FEET

EARTH EXCAVATION	30
STRUCTURAL EXCAVATION	2
UNDERCUT	0
PGE REPLACEMENT	0
TOPSOIL EXCAVATION	6
EMBANKMENT	0
SAND BACKFILL	36

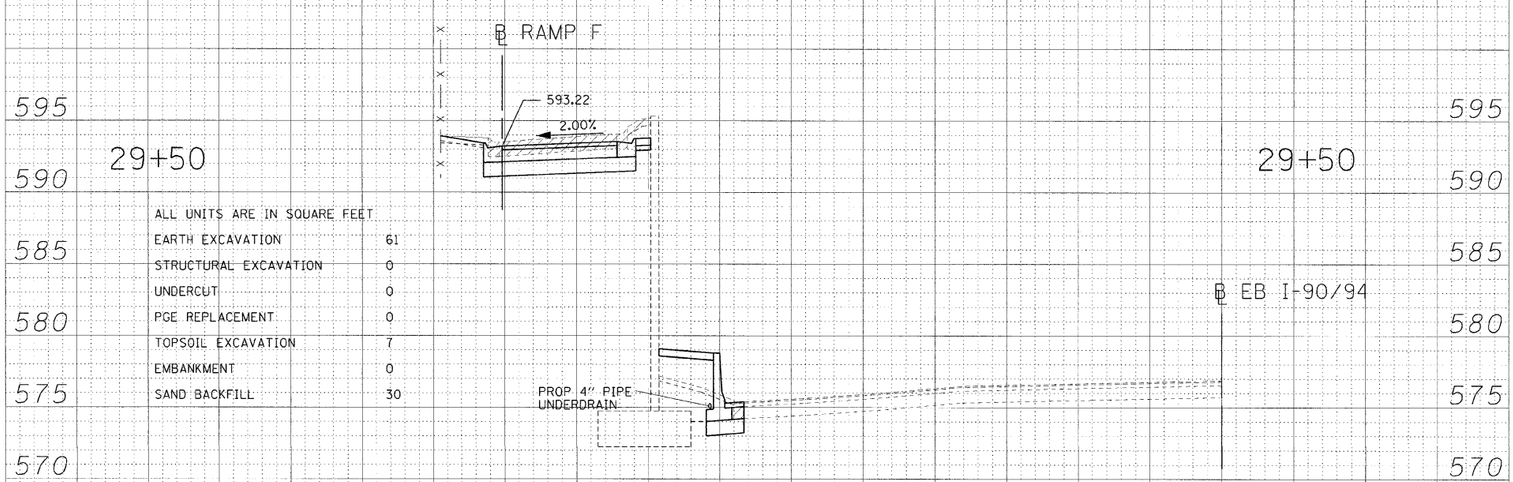

ALL UNITS ARE IN SQUARE FEET

EARTH EXCAVATION	61
STRUCTURAL EXCAVATION	0
UNDERCUT	0
PGE REPLACEMENT	0
TOPSOIL EXCAVATION	7
EMBANKMENT	0
SAND BACKFILL	30

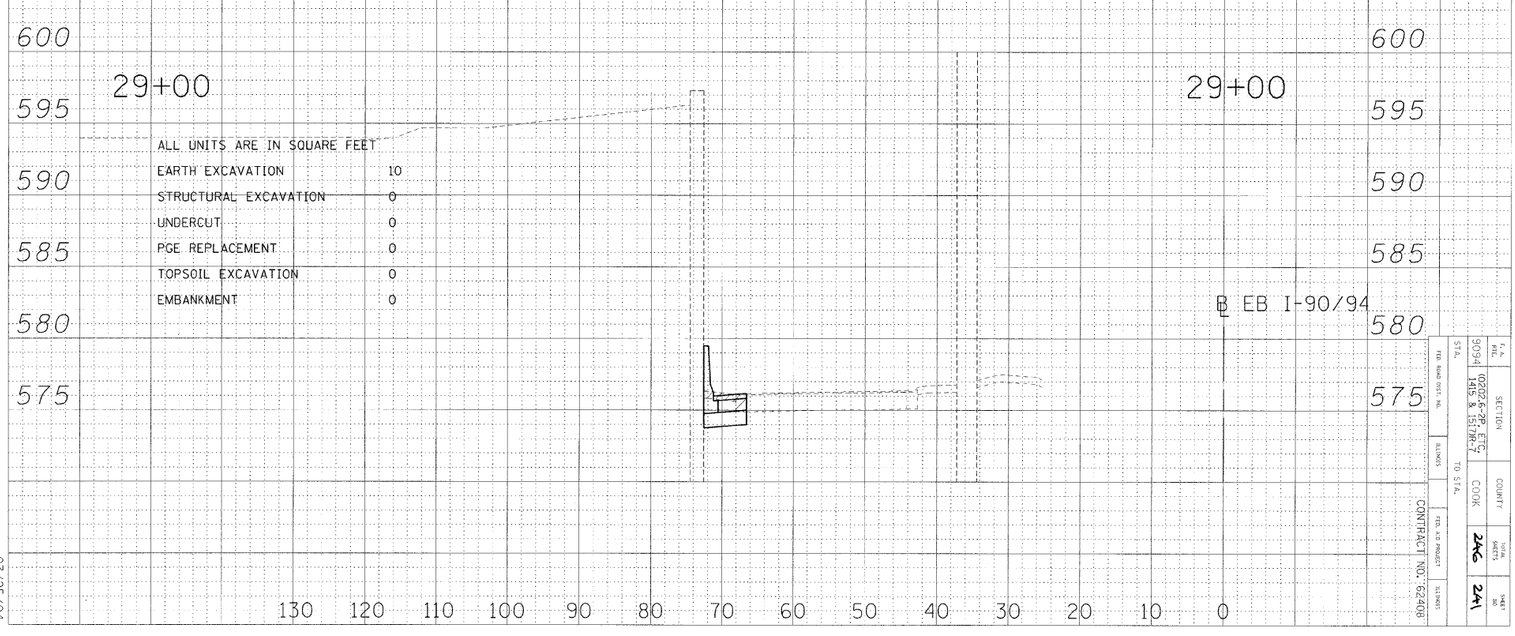

ALL UNITS ARE IN SQUARE FEET

EARTH EXCAVATION	10
STRUCTURAL EXCAVATION	0
UNDERCUT	0
PGE REPLACEMENT	0
TOPSOIL EXCAVATION	0
EMBANKMENT	0

STA. 29+00 TO 30+50

03/25/04

F.A. RTE.	SECTION	COUNTY	TOTAL SHEETS	SHEET NO.
9094	10202.6-2P, ETC. 1415 & 1517R-7	COOK	246	241
STA.	TO STA.			
FED. ROAD DIST. NO.	ILLINOIS	FED. AID PROJECT	ILLINOIS	

CONTRACT NO. 62408