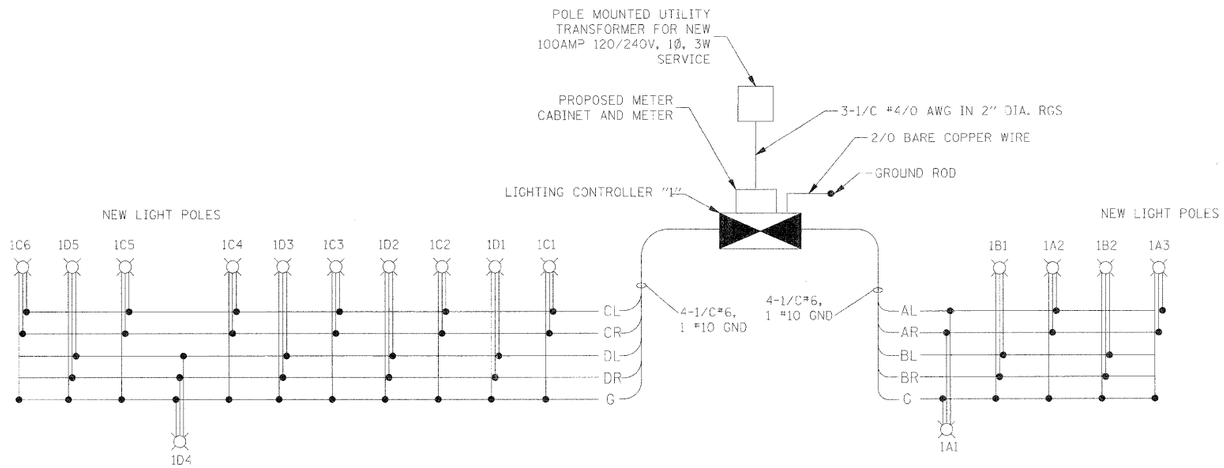

LEGEND

- SINGLE 250W HPS LUMINAIRE - 240V, DESIGNATION AS INDICATED
- LIGHTING CONTROLLER
- UTILITY TRANSFORMER
- L BLACK PHASE CONDUCTOR
- R RED PHASE CONDUCTOR
- G GREEN GROUND CONDUCTOR

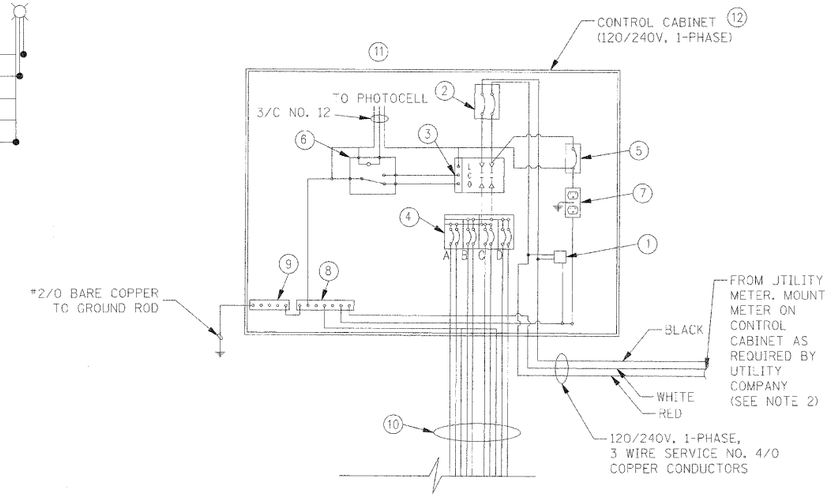

PROPOSED CONTROL CABINET TYPICAL SCHEMATIC DIAGRAM

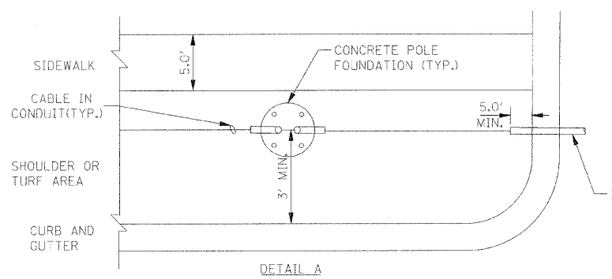

DETAIL A

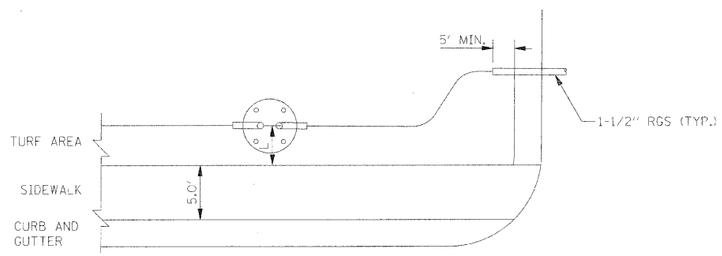

DETAIL C L= 1.0' OR AS DIRECTED BY THE ENGINEER

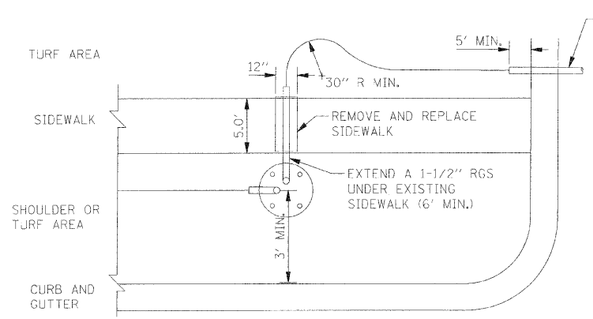

DETAIL B

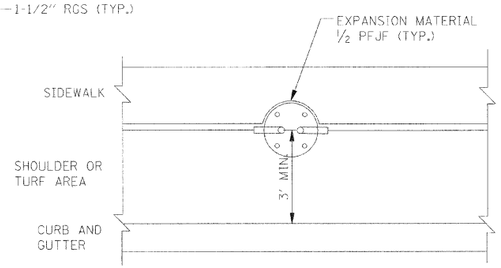

DETAIL D

TYPICAL CONDUIT INSTALLATION DETAILS NEAR INTERSECTIONS

NOTES:

1. CONDUIT SHALL BE INSTALLED MINIMUM 2'-0" FROM PAVEMENT EDGE.
2. CONTRACTOR SHALL MAKE AN EFFORT TO INSTALL RGS CONDUITS (UNDER DRIVEWAYS OR ROADWAY) AT THE SAME SIDE OF THE SIDEWALK AS THE POLE FOUNDATION (DETAIL A).
3. WHEN IT IS NECESSARY TO CROSS THE EXISTING SIDEWALK, CONTRACTOR SHALL INSTALL A 4" RGS CONDUIT PERPENDICULAR TO THE SIDEWALK (DETAIL B).
4. WHEN THE LOCATION OF A POLE FOUNDATION FALLS COMPLETELY WITHIN THE EXISTING SIDEWALK, THE CONTRACTOR SHALL CONSTRUCT THE FOUNDATION AT THE SIDE OF THE SIDEWALK AWAY FROM THE ROAD (DETAIL C). WHEN PARTIAL OVERLAP OCCURS, THE CONTRACTOR SHALL CONSTRUCT THE POLE FOUNDATION AS SHOWN ON DETAIL D.
5. THE LOCATIONS SHOWN IN THE DETAILS ARE APPROXIMATE AND SHALL BE FIELD COORDINATED DURING CONSTRUCTION.

NOTES:

1. THIS DIAGRAM IS GENERAL IN NATURE. THE CONTRACTOR SHALL SUPPLY SHOP DRAWINGS AND CATALOGUE CUTS FOR THE SPECIFIC EQUIPMENT TO BE USED TO THE VILLAGE FOR THEIR APPROVAL PRIOR TO THE START OF CONSTRUCTION.
2. AVAILABLE SHORT CIRCUIT CURRENT FROM UTILITY, APPROXIMATELY 15,000 KAIC

CONTROL CABINET LEGEND

(1) 10,000 AMP SURGE ARRESTOR (ELECTRONIC GUARD, EG 240 RC BY INTERMATIC)

(2) 100 AMP, 2 POLE MAIN CIRCUIT BREAKER, 240V, 22KAIC (TYPE "TEB" BY GENERAL ELECTRIC OR TYPE "FAL" BY SQUARE D)

(3) 100 AMP, 2 POLE SINGLE THROW, ELECTRICALLY OPERATED, MECHANICALLY HELD CONTACTOR (GENERAL ELECTRIC OR SQUARE D)

(4) FOUR 40AMP, 2 POLE CIRCUIT BREAKERS, 240V, 22KAIC (TYPE "TEB" BY GENERAL ELECTRIC OR TYPE "FAL" BY SQUARE D)

(5) 15AMP, 1 POLE CIRCUIT BREAKER, 240V, 22KAIC (TYPE "TEB" BY GENERAL ELECTRIC OR APPROVED EQUAL)

(6) CONTROL RELAY, 120 V COIL, CONTACTS RATED 10A AT 120 VAC, HERMETICALLY SEALED

(7) 15AMP, 120V, DUPLEX GFCI OUTLET

(8) 1" X 12" NEUTRAL STRIP LABELED "NEUTRAL" AND JOINED TO THE GROUND STRIP WITH A BONDING JUMPER

(9) 1" X 12" GROUND STRIP LABELED "GROUND" AND PAINTED GREEN

(10) 1 #10 GROUND WIRE REQUIRED FOR EACH CIRCUIT. GROUND WIRE NOT SHOWN FOR SAKE OF CLARITY

(11) PHOTOCELL MOUNTED ON POLE TOP OF NEAREST LIGHT POLE. PHOTOCELL AND 3/C NO. 12 TO CONROLLER INCLUDED IN LIGHTING CONTROLLER PAY ITEM.

(12) PEDESTAL MOUNTED LIGHTING CONTROLLER, CAST ALUMINUM, NEMA 250 TYPE 3R ENCLOSURE WITH CORBIN NO. 2 LOCK ON STEEL 4" POST WITH TYPE A FOUNDATION.

FILE NAME = $FILEL$	USER NAME = $USER$	DESIGNED	FCI	REVISED	STATE OF ILLINOIS DEPARTMENT OF TRANSPORTATION	ELECTRICAL DETAILS	F.A.U RTE.	SECTION	COUNTY	TOTAL SHEETS / SHEET NO.
		DRAWN -	TMC	REVISED -			3003	00-00084-00-PV	DUPAGE	112 / 70
	PLOT SCALE = $SCALE$	CHECKED -	MAR	REVISED -			BLACKHAWK DR RECONSTRUCTION		CONTRACT NO. 63121	
	PLOT DATE = $DATE$	DATE -	01/02/09	REVISED -		SCALE: NONE / SHEET NO. 3 OF 3 SHEETS / STA. TO STA.	FED. ROAD DIST. NO. 1	ILLINOIS	FED. AID PROJECT	