F.A.I RTE.	SECTION	COUNTY	TOTAL SHEETS	SHEET NO.
70	D-7 SAFETY 2009-1	FAYETTE	100	1
FED. ROAD DIST. NO.	ILLINOIS	CONTRACT NO. 74313		

STATE OF ILLINOIS
DEPARTMENT OF TRANSPORTATION
DIVISION OF HIGHWAYS

PROPOSED HIGHWAY PLANS

FAI ROUTE 70 (I70)
SECTION D-7 SAFETY 2009-1
PROJECT: HSIP-070-2(232)061
FAYETTE COUNTY

C-97-073-08

FOR INDEX OF SHEETS, SEE SHEET NO. 2

LOCATIONS	STRUCTURES
LOC. #1	026-0074
LOC. #2	026-0073
LOC. #3	026-0077
LOC. #4	026-0087
LOC. #5	026-0032
LOC. #6	026-0075
LOC. #7	026-0049
LOC. #8	026-0076
LOC. #9	026-0054
LOC. #10	026-0078
LOC. #11	026-0079
LOC. #12	026-0055
LOC. #13	026-0080

ADT = 20,000 (2008)

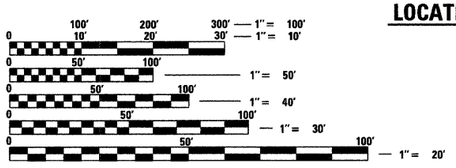

FULL SIZE PLANS HAVE BEEN PREPARED USING STANDARD ENGINEERING SCALES. REDUCED SIZED PLANS WILL NOT CONFORM TO STANDARD SCALES. IN MAKING MEASUREMENTS ON REDUCED PLANS, THE ABOVE SCALES MAY BE USED.

J.U.L.I.E.
JOINT UTILITY LOCATION INFORMATION FOR EXCAVATION
1-800-892-0123
OR 811

PROJECT ENGINEER: TOM RONAN
PROJECT MANAGER: JEFF DAVISON

CONTRACT NO. 74313

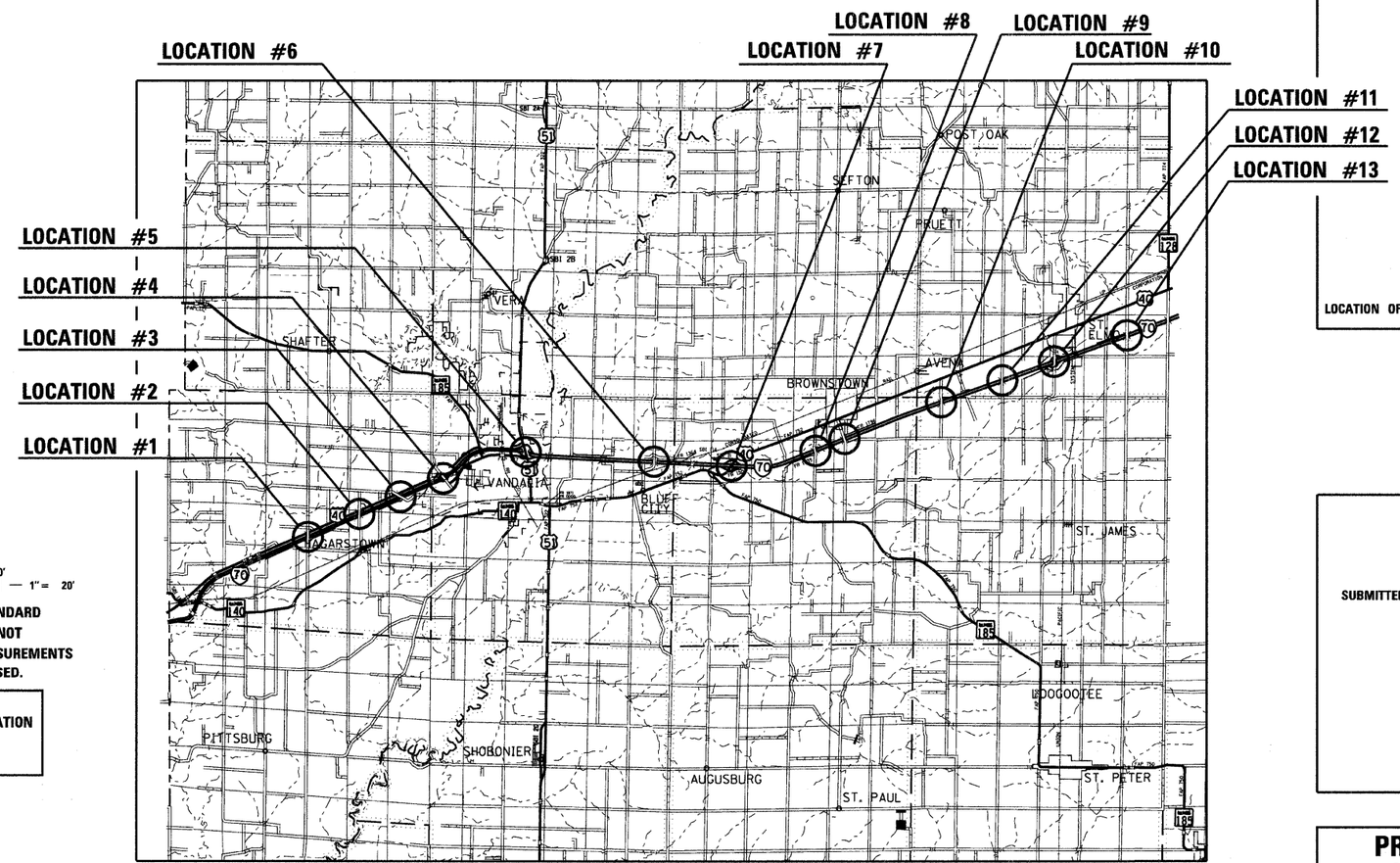

D-97-029-08

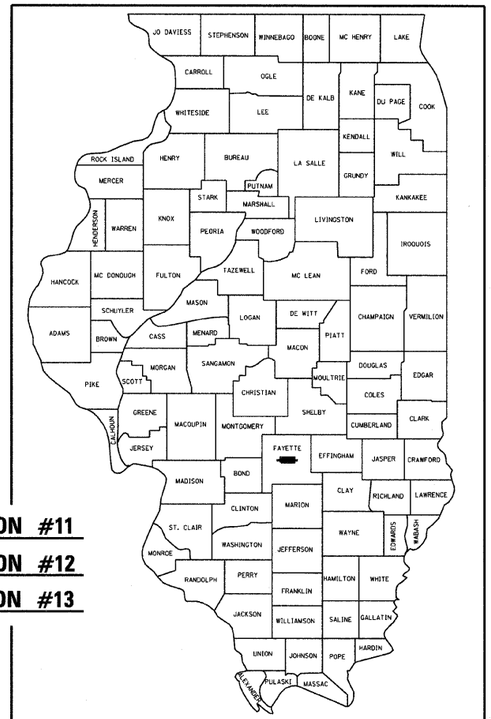

LOCATION OF SECTION INDICATED THUS:- ▬

STATE OF ILLINOIS
DEPARTMENT OF TRANSPORTATION
DIVISION OF HIGHWAYS

SUBMITTED January 20 2009
Roger L. Driskell
DEPUTY DIRECTOR OF HIGHWAYS, REGION ENGINEER
March 27 2009
Charles J. Ingersoll
ENGINEER OF DESIGN AND ENVIRONMENT
March 27 2009
Christine M. Reed
DIRECTOR OF HIGHWAYS, CHIEF ENGINEER

PRINTED BY THE AUTHORITY OF THE STATE OF ILLINOIS

INDEX OF SHEETS

1	COVER SHEET
2	INDEX OF SHEETS/LIST OF STANDARDS/GENERAL NOTES
3	SUMMARY OF QUANTITIES
4	TYPICAL SECTION
5 - 7	SCHEDULE OF QUANTITIES
8 - 14	TIE POINTS
15 - 29	PLAN AND PROFILE SHEETS
30 - 31	CRASHWALL MODIFICATION DETAILS
32 - 98	CROSS SECTIONS
99 -100	DETAIL SHEETS

LIST OF STANDARDS

000001-05 STANDARD SYMBOLS, ABBREVIATIONS AND PATTERNS
001001-02 AREAS OF REINFORCEMENT BARS
001006 DECIMAL OF AN INCH AND OF A FOOT
280001-04 TEMPORARY EROSION CONTROL SYSTEMS
542531-03 INLET BOX TYPE G, 600mm (24•)
542601-01 REINFORCED CONCRETE PIPE ELBOW
601001-03 SUB-SURFACE DRAINS
601101-01 CONCRETE HEADWALL FOR PIPE DRAIN
602601-02 PRECAST REINFORCED CONCRETE FLAT SLAB TOP
604001-03 FRAME AND LIDS, TYPE 1
630001-08 STEEL PLATE BEAM GUARD RAIL
630301-05 SHOULDER WIDENING FOR TYPE 1 (SPECIAL) GUARD RAIL TERMINALS
631011-05 TRAFFIC BARRIER TERMINAL, TYPE 2
635006-03 REFLECTOR AND TERMINAL MARKER PLACEMENT
635011-02 REFLECTOR MARKER AND MOUNTING DETAILS
701011-02 OFF-ROAD OPERATIONS, MULTILANE, 4.5m (15•) TO 600mm (24•) FROM PAVEMENT EDGE
701101-02 OFF-ROAD OPERATIONS, MULTILANE, MORE THAN 4.5m (15•) AWAY
701400-03 APPROACH TO LANE CLOSURE, FREEWAY/EXPRESSWAY
701406-05 LANE CLOSURE FREEWAY/EXPRESSWAY, DAY OPERATIONS ONLY
701901-01 TRAFFIC CONTROL DEVICES

GENERAL NOTES

THIS SECTION SHALL BE CONSTRUCTED IN ACCORDANCE WITH THE PLANS, THE "STANDARD SPECIFICATIONS FOR ROAD AND BRIDGE CONSTRUCTION", ADOPTED JANUARY 1, 2007; THE "SUPPLEMENTAL SPECIFICATIONS AND RECURRING SPECIAL PROVISIONS" INDICATED ON THE CHECK SHEET, AND "THE SPECIAL PROVISIONS" INCLUDED IN THE PROPOSAL.

THE WORK INCLUDED IN THIS SECTION CONSISTS OF ERECTING GUARDRAIL, PLACING EMBANKMENT, CONSTRUCTING IMPACT ATTENUATORS, CONSTRUCTING PIPE CULVERTS, INLETS, EXTENDING PIPE UNDERDRAINS (SPECIAL), AND ANY OTHER WORK NECESSARY TO COMPLETE THIS SECTION.

REMOVAL OF EXISTING GUARD POSTS IN THE AREAS OF THE CONSTRUCTION OF EMBANKMENTS SHALL BE CONSIDERED INCIDENTAL TO THE EARTH WORK.

ALL ELEVATIONS SHOWN IN PLANS ARE BASED ON U.S.G.S. DATUM.

ALL DISTURBED AREAS WITHIN THE CONSTRUCTION LIMITS SHALL BE FERTILIZED AND SEEDED. SEEDING SHALL BE CLASS 2 IN ACCORDANCE WITH THE SPECIAL PROVISIONS AND THE APPLICABLE ARTICLES OF SECTION 250 OF THE STANDARD SPECIFICATIONS.

SUMMARY OF QUANTITIES

CODE NO	ITEM	UNIT	TOTAL QUANTITIES	CONSTRUCTION TYPE CODE: I-70 4 LANE FED 90% STATE 10% SFTY-3J	I-70 4 LANE FED 90% STATE 10% SFTY-3N	I-70 FED 90% STATE 10% SFTY-2A	
20200100	EARTH EXCAVATION	CU YD	231		231		
20400800	FURNISHED EXCAVATION	CU YD	3506	271	3235		
25000200	SEEDING, CLASS 2	ACRE	6.9	0.4	6.5		
25000400	NITROGEN FERTILIZER NUTRIENT	POUND	623	38	585		
25000500	PHOSPHORUS FERTILIZER NUTRIENT	POUND	623	38	585		
25000600	POTASSIUM FERTILIZER NUTRIENT	POUND	623	38	585		
25100115	MULCH, METHOD 2	ACRE	6.9	0.4	6.5		
28000250	TEMPORARY EROSION CONTROL SEEDING	POUND	692	42	650		
28000500	INLET AND PIPE PROTECTION	EACH	13		13		
48101200	AGGREGATE SHOULDERS, TYPE B	TON	148	148			
50105220	PIPE CULVERT REMOVAL	FOOT	1139		1139		
50300225	CONCRETE STRUCTURES	CU YD	18.6			18.6	
50800205	REINFORCEMENT BARS, EPOXY COATED	POUND	1540			1540	
54200439	PIPE CULVERTS, TYPE 1 RCCP 24"	FOOT	1870		1870		
54205059	PIPE CULVERTS, SPECIAL 24"	FOOT	160		160		
54246405	INLET BOX, STANDARD 542531	EACH	13		13		
60100060	CONCRETE HEADWALL FOR PIPE DRAINS	EACH	6		6		
60108200	PIPE UNDERDRAINS 6" (SPECIAL)	FOOT	71		71		
60260200	INLETS TO BE ADJUSTED (SPECIAL)	EACH	1		1		
60262900	INLETS TO BE RECONSTRUCTED WITH NEW TYPE 1 FRAME, OPEN LID	EACH	1		1		
63000000	STEEL PLATE BEAM GUARD RAIL, TYPE A	FOOT	651	651			
63100045	TRAFFIC BARRIER TERMINAL, TYPE 2	EACH	2	2			
63100167	TRAFFIC BARRIER TERMINAL, TYPE 1 (SPECIAL) TANGENT	EACH	2	2			
63200305	STEEL PLATE BEAM GUARD RAIL REMOVAL	FOOT	3077	476.5	2600.5		
63400105	GUARD POSTS	EACH	120		120		
67100100	MOBILIZATION	L SUM	1		1		
70100700	TRAFFIC CONTROL AND PROTECTION, STANDARD 701406	L SUM	1		1		
78200410	GUARDRAIL MARKERS, TYPE A	EACH	10	10			
78201000	TERMINAL MARKER - DIRECT APPLIED	EACH	2	2			
X0349800	CONCRETE HEADWALL FOR PIPE UNDERDRAIN REMOVAL	EACH	6		6		
X6050700	REMOVE INLET BOX	EACH	6		6		
Z0002005	ATTENUATOR BASE	SQ YD	1219.2		1219.2		
Z0029999	IMPACT ATTENUATOR REMOVAL	EACH	2		2		
Z0030150	IMPACT ATTENUATORS (NON-REDIRECTIVE), TEST LEVEL 3	EACH	24		24		

EXISTING TYPICAL CROSS SECTION

FAI 70
STATION 508+16 TO STATION 517+02

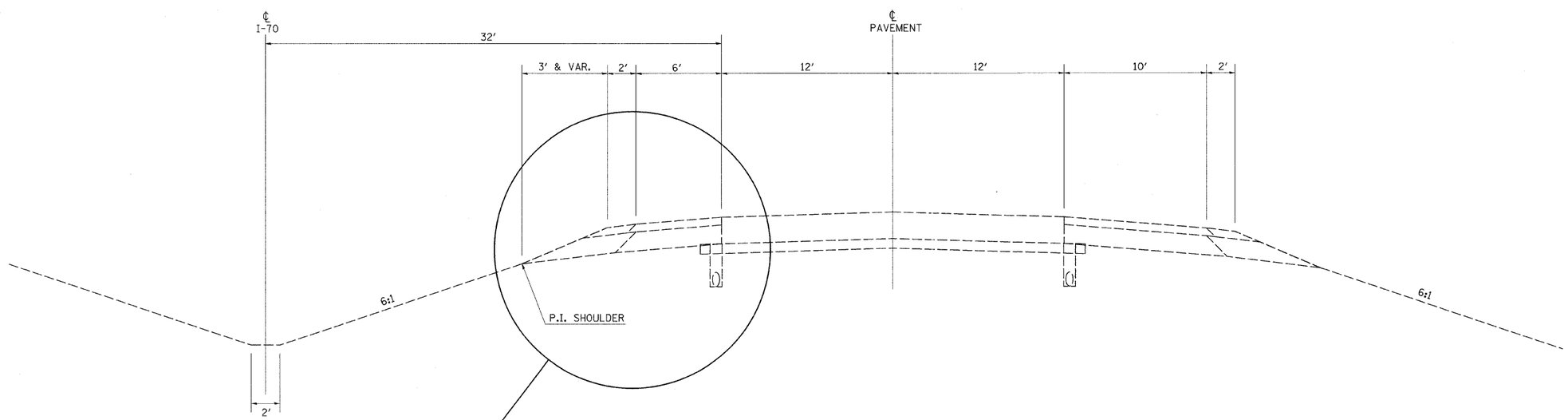

DETAIL "A"

EB STA. 508+15.98 TO STA. 513+16.27
WB STA. 511+97.59 TO STA. 517+02.29

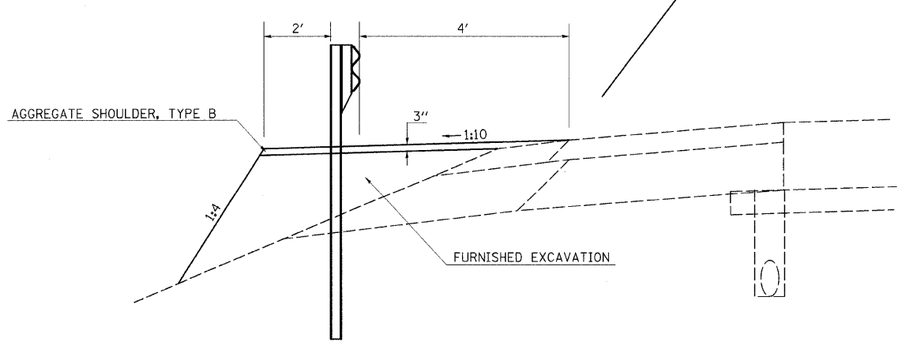

FILE NAME = c:\pw_work\pwidot\swartzrw\dms50728\shtypicals_74313.dgn	USER NAME = swartzrw	DESIGNED -	REVISED -	STATE OF ILLINOIS DEPARTMENT OF TRANSPORTATION	TYPICAL CROSS SECTIONS			F.A.I RTE.	SECTION	COUNTY	TOTAL SHEETS / SHEET NO.
	PLOT SCALE = 20.0000 ' / IN.	DRAWN -	REVISED -					70	D-7 SAFETY 2009-1	FAYETTE	100 / 4
	PLOT DATE = 1/20/2009	CHECKED -	REVISED -							CONTRACT NO. 74313	
		DATE -	REVISED -		SCALE: NA	SHEET NO. 1 OF 1 SHEETS	STA. TO STA.	FED. ROAD DIST. NO.	ILLINOIS	FED. AID PROJECT	

EARTHWORK SCHEDULE

Location	Earth Excavation	Earth Excavation Adj. for Shrinkage	Embankment	Earthwork Balance Waste (+)/Shortage (-)
	CU. YD	CU. YD.	CU. YD.	CU. YD.
S. N. 026-0032; Sta. 508+00 to Sta. 517+50	0.0	0	271.0	-271.0
S. N. 026-0049: Sta. 702+75 to Sta. 707+00	30.0	22.5	103.0	-80.5
S. N. 026-0054: Sta. 855+25 to Sta. 859+75	3.0	2.3	379.0	-376.8
S. N. 026-0055: Sta. 1141+75 to Sta. 1146+25	8.0	6.0	304.0	-298.0
S. N. 026-0073; Sta. 276+75 to 281+50	35.0	26.3	184.0	-157.8
S. N. 026-0074; Sta. 205+00 to Sta. 209+50	25.0	18.8	416.0	-397.3
S. N. 026-0075; Sta. 677+50 to Sta. 681+75	49.0	36.8	131.0	-94.3
S. N. 026-0076; Sta. 814+50 to Sta. 818+75	8.0	6.0	343.0	-337.0
S. N. 026-0077; Sta. 332+75 to Sta. 337+25	12.0	9.0	369.0	-360.0
S. N. 026-0078; Sta. 987+25 to Sta. 991+75	6.0	4.5	267.0	-262.5
S. N. 026-0079; Sta. 1071+00 to Sta. 1075+25	7.0	5.3	456.0	-450.8
S. N. 026-0080; Sta. 1240+50 to Sta. 1244+75	21.0	15.8	144.0	-128.3
S. N. 026-0087; Sta. 393+75 to Sta. 399+00	27.0	20.3	312.0	-291.8
Total=	231	173	3679	-3506

TEMPORARY EROSION CONTROL SEEDINGS

LOCATION	AREA (Acres)	Lbs.
S. N. 026-0032	0.42	42.0
S. N. 026-0049	0.52	52.0
S. N. 026-0054	0.47	47.0
S. N. 026-0055	0.47	47.0
S. N. 026-0073	0.63	63.0
S. N. 026-0074	0.56	56.0
S. N. 026-0075	0.50	50.0
S. N. 026-0076	0.47	47.0
S. N. 026-0077	0.66	66.0
S. N. 026-0078	0.52	52.0
S. N. 026-0079	0.52	52.0
S. N. 026-0080	0.52	52.0
S. N. 026-0087	0.66	66.0
Total=		692.0

SEEDING, CLASS 2

LOCATION	AREA (Acres)
S. N. 026-0032	0.42
S. N. 026-0049	0.52
S. N. 026-0054	0.47
S. N. 026-0055	0.47
S. N. 026-0073	0.63
S. N. 026-0074	0.56
S. N. 026-0075	0.50
S. N. 026-0076	0.47
S. N. 026-0077	0.66
S. N. 026-0078	0.52
S. N. 026-0079	0.52
S. N. 026-0080	0.52
S. N. 026-0087	0.66
Total=	6.9

NITROGEN FERTILIZER NUTRIENT

LOCATION	AREA (Acres)	LBS.
S. N. 026-0032	0.42	38
S. N. 026-0049	0.52	47
S. N. 026-0054	0.47	42
S. N. 026-0055	0.47	42
S. N. 026-0073	0.63	57
S. N. 026-0074	0.56	50
S. N. 026-0075	0.50	45
S. N. 026-0076	0.47	42
S. N. 026-0077	0.66	59
S. N. 026-0078	0.52	47
S. N. 026-0079	0.52	47
S. N. 026-0080	0.52	47
S. N. 026-0087	0.66	59
Total=		623

PHOSPHOROUS FERTILIZER NUTRIENT

LOCATION	AREA (Acres)	LBS.
S. N. 026-0032	0.42	38
S. N. 026-0049	0.52	47
S. N. 026-0054	0.47	42
S. N. 026-0055	0.47	42
S. N. 026-0073	0.63	57
S. N. 026-0074	0.56	50
S. N. 026-0075	0.50	45
S. N. 026-0076	0.47	42
S. N. 026-0077	0.66	59
S. N. 026-0078	0.52	47
S. N. 026-0079	0.52	47
S. N. 026-0080	0.52	47
S. N. 026-0087	0.66	59
Total=		623

POTTASSIUM FERTILIZER NUTRIENT

LOCATION	AREA (Acres)	LBS.
S. N. 026-0032	0.42	38
S. N. 026-0049	0.52	47
S. N. 026-0054	0.47	42
S. N. 026-0055	0.47	42
S. N. 026-0073	0.63	57
S. N. 026-0074	0.56	50
S. N. 026-0075	0.50	45
S. N. 026-0076	0.47	42
S. N. 026-0077	0.66	59
S. N. 026-0078	0.52	47
S. N. 026-0079	0.52	47
S. N. 026-0080	0.52	47
S. N. 026-0087	0.66	59
Total=		623

MULCH METHOD, 2

LOCATION	AREA (Acres)
S. N. 026-0032	0.42
S. N. 026-0049	0.52
S. N. 026-0054	0.47
S. N. 026-0055	0.47
S. N. 026-0073	0.63
S. N. 026-0074	0.56
S. N. 026-0075	0.50
S. N. 026-0076	0.47
S. N. 026-0077	0.66
S. N. 026-0078	0.52
S. N. 026-0079	0.52
S. N. 026-0080	0.52
S. N. 026-0087	0.66
Total =	6.9

TRAFFIC BARRIER TERMINAL, TYPE 2

LOCATION	STATION	TO	STATION	EA.
RT. MED	512+51.50		512+63.57	1.0
LT. MED	512+53.68		512+65.63	1.0
			TOTAL =	2.0

TRAFFIC BARRIER TERMINAL, TYPE 1, SPECIAL (TANGENT)

LOCATION	STATION	TO	STATION	EA.
RT. MED	508+74.25		509+24.28	1.0
LT. MED	515+89.71		516+39.49	1.0
			TOTAL =	2.0

GUARDRAIL MARKERS, TYPE A

LOCATION	STATION	TO	STATION	LENGTH	EA.
RT. MED	508+74.25		512+63.57	389.3	5
LT. MED	512+53.68		516+39.49	385.8	5
				TOTAL =	10

STEEL PLATE BEAM GUARD RAIL REMOVAL

STRUCTURE	LOCATION	STATION	TO	STATION	FT.
026-0032	RT MED	511+29.30		513+68.28	238.98
	LT MED	511+50.33		513+87.83	237.50
026-0049	RT MED	703+99.49		705+12.01	112.52
	LT MED	704+87.82		706+01.39	113.57
026-0054	RT MED	856+38.27		857+51.76	113.49
	LT MED	857+34.30		858+48.11	113.81
026-0055	RT MED	1142+93.97		1144+07.66	113.69
	LT MED	1143+86.32		1145+00.21	113.89
026-0073	RT MED	277+65.15		279+29.11	163.96
	LT MED	278+97.30		280+61.27	163.97
026-0074	RT MED	206+25.94		207+38.92	112.98
	LT MED	207+08.79		208+22.03	113.24
026-0075	RT MED	NA		NA	0.00
	LT MED	NA		NA	0.00
026-0076	RT MED	815+56.55		816+70.03	113.48
	LT MED	816+53.66		817+67.03	113.37
026-0077	RT MED	334+01.30		335+14.59	113.29
	LT MED	334+84.96		335+97.03	112.07
026-0078	RT MED	988+46.67		989+60.23	113.56
	LT MED	989+41.13		990+54.79	113.66
026-0079	RT MED	1072+15.75		1073+29.32	113.57
	LT MED	1073+12.56		1074+01.20	88.64
026-0080	RT MED	1241+65.28		1242+79.17	113.89
	LT MED	1242+61.47		1243+75.39	113.92
026-0087	RT MED	395+15.98		396+66.17	150.19
	LT MED	396+37.53		397+43.59	106.06
				TOTAL =	3077

PIPE CULVERT REMOVAL

LOCATION	STATION	TO	STATION	LENGTH
026-0054	856+18.54		858+87.26	268.7
026-0055	1142+76.17		1145+47.06	270.9
026-0076	815+37.19		815+77.41	40.2
	815+81.34		817+95.80	214.5
026-0077	333+91.90		336+80.30	288.4
026-0087	397+02.31		397+58.47	56.2
			TOTAL =	1138.9

INLET PROTECTION

LOCATION	STATION	NO.
026-0054	855+60.51	1.0
	859+24.55	1.0
026-0055	1142+13.22	1.0
	1145+81.56	1.0
026-0074	205+25.69	1.0
	209+22.07	1.0
026-0076	814+79.24	1.0
	818+42.49	1.0
026-0077	333+00.00	1.0
026-0078	987+74.31	1.0
	991+36.76	1.0
026-0079	1075+10.86	1.0
026-0087	398+46.78	1.0
	Total =	13.0

PIPE UNDERDRAIN, 6" (SPECIAL)

LOCATION		STATION	LENGTH (FOOT)
026-0032	RT. MED	510+07.00	4.5
026-0073	RT. MED	277+10.00	2.0
026-0074	LT MED	205+83.00	10.0
026-0077	LT. MED	333+57.00	18.0
	RT. MED	333+58.00	21.0
026-0079	RT. MED	1074+17.00	15.0
		Total =	70.5

CONCRETE HEADWALL FOR PIPE DRAIN, REMOVAL

LOCATION		STATION	EACH
026-0032	RT. MED	510+07.00	1.0
026-0073	RT. MED	277+10.00	1.0
026-0074	LT MED	205+83.00	1.0
026-0077	LT. MED	333+57.00	1.0
	RT. MED	333+58.00	1.0
026-0079	RT. MED	1074+17.00	1.0
		Total =	6.0

AGGREGATE SHOULDERS, TYPE B

LOCATION				LENGTH	CU YDS	TONS
RT	508+15.98	TO	513+16.27	500.29	36	73.8
LT	511+97.59	TO	517+02.29	504.70	36	73.8
					TOTAL =	148

REMOVE INLET BOX

LOCATION	STATION	EACH
026-0076	815+12.51	1.0
026-0077	333+67.77	1.0
026-0078	988+02.82	1.0
	991+05.10	1.0
026-0079	1074+24.30	1.0
026-0087	397+82.72	1.0
	Total =	6.0

CONCRETE HEADWALLS FOR PIPE DRAINS

LOCATION		STATION	EACH
026-0032	RT. MED	510+07.00	1.0
026-0073	RT. MED	277+10.00	1.0
026-0074	LT MED	205+83.00	1.0
026-0077	LT. MED	333+57.00	1.0
	RT. MED	333+58.00	1.0
026-0079	RT. MED	1074+17.00	1.0
		Total =	6.0

STEEL PLATE BEAM GUARDRAIL, TYPE A

LOCATION	STATION	TO	STATION	FT.
RT. MED	509+24.28		512+51.51	325.50
LT. MED	512+65.63		515+89.71	325.50
			TOTAL =	651.00

TERMINAL MARKERS, DIRECT APPLIED

LOCATION	STATION	EA.
RT. MED	508+74.25	1.0
LT. MED	516+39.49	1.0
	TOTAL =	2.0

PIPE CULVERTS SPECIAL, 24"

*22.5 Degree Bend

LOCATION	STATION		TO	STATION		FEET
026--0054	857+09.00	0.0' RT		857+16.10	1.5' RT	8.0
	857+24.13	4.5' RT		857+31.84	5.9' RT	8.0
	857+49.53	6.2' RT		857+57.23	4.7' RT	8.0
	857+64.58	1.5' RT		857+72.27	0.0' RT	8.0
026-0055	1143+65.22	0.0' RT		1143+72.91	1.5' RT	8.0
	1143+80.30	4.5' RT		1143+87.99	6.1' RT	8.0
	1144+11.99	6.1' RT		1144+19.67	4.5' RT	8.0
	1144+27.05	1.5' RT		1144+34.76	0.0' RT	8.0
026-0074	206+92.32	0.0' RT		207+00.00	1.5' RT	8.0
	207+07.41	4.6' RT		207+15.10	6.1' RT	8.0
	207+31.10	6.1' RT		207+38.80	4.6' RT	8.0
	207+46.19	1.5' RT		207+53.88	0.0' RT	8.0
026-0076	816+38.03	0.0' RT		816+45.79	1.5' RT	8.0
	816+53.31	4.2' RT		816+61.07	5.5' RT	8.0
	816+69.07	5.5' RT		816+76.82	3.5' RT	8.0
	816+84.34	1.4' RT		816+92.10	0.0' RT	8.0
026-0077	334+75.00	0.0' RT		334+82.70	1.5' RT	8.0
	334+90.10	4.5' RT		334+97.80	6.0' RT	8.0
	335+05.80	6.0' RT		335+13.49	4.4' RT	8.0
	335+20.87	1.3' RT		335+28.56	0.0' RT	8.0
					TOTAL =	160.0

INLETS TO BE ADJUSTED (SPECIAL)

LOCATION	STATION	EACH
026-0087	397+00.00	1.0
	TOTAL =	1.0

INLETS TO BE RECONSTRUCTED WITH NEW TYPE 1 FRAME, OPEN LID

LOCATION	STATION	EACH
026-0076	815+79.23	1.0
	TOTAL =	1.0

PIPE CULVERTS, TYPE I RCCP 24"

LOCATION	STATION	TO	STATION		FOOT
026-0054	855+81.00		859+04.05		296.0
026-0055	1142+33.72		1145+61.06		296.0
026-0074	205+46.19		209+01.57		328.0
026-0076	814+99.74		818+21.99		288.0
026-0077	333+20.34		336+80.44		366.0
026-0078	987+94.81		990+80.48		72.0
026-0079	1074+00.41		1074+90.36		96.0
026-0087	397+02.31		398+26.28		128.0
				TOTAL =	1870.0

GUARD POSTS

LOCATION		NO.
S.N. 026-0032		0.0
S.N. 026-0049		10.0
S.N. 026-0054		10.0
S.N. 026-0055		10.0
S.N. 026-0073		10.0
S.N. 026-0074		10.0
S.N. 026-0075		10.0
S.N. 026-0076		10.0
S.N. 026-0077		10.0
S.N. 026-0078		10.0
S.N. 026-0079		10.0
S.N. 026-0080		10.0
S.N. 026-0087		10.0
	TOTAL =	120.0

IMPACT ATTENUATOR REMOVAL

LOCATION	STATION	NO.
026-0075	679+30.64	1.0
	679+91.29	1.0
	TOTAL =	2.0

ATTENUATOR BASE

LOCATION	STATION	SQ. YD.
026-0049	704+43.12	50.8
	705+56.88	50.8
026-0054	856+89.35	50.8
	857+96.85	50.8
026-0055	1143+41.61	50.8
	1144+52.21	50.8
026-0073	278+58.92	50.8
	279+67.67	50.8
026-0074	206+70.44	50.8
	207+77.33	50.8
026-0075	679+07.55	50.8
	680+14.37	50.8
026-0076	816+08.23	50.8
	817+14.75	50.8
026-0077	334+46.92	50.8
	335+53.19	50.8
026-0078	988+97.56	50.8
	990+04.68	50.8
026-0079	1072+67.44	50.8
	1073+74.30	50.8
026-0080	1242+16.75	50.8
	1243+23.75	50.8
026-0087	395+55.30	50.8
	397+04.71	50.8
	TOTAL =	1219.20

INLET BOX, STANDARD 542531

LOCATION	STATION	NO.
026-0054	855+60.51	1.0
	859+24.55	1.0
026-0055	1142+13.22	1.0
	1145+81.56	1.0
026-0074	205+25.69	1.0
	209+22.07	1.0
026-0076	814+79.24	1.0
	818+42.49	1.0
026-0077	333+00.00	1.0
026-0078	987+74.31	1.0
	991+36.76	1.0
026-0079	1075+10.86	1.0
026-0087	398+46.78	1.0
	TOTAL =	13.0

IMPACT ATTENUATOR (NON-REDIRECTIVE), TEST LEVEL 3

LOCATION	STATION	EACH
026-0049	704+43.12	1.0
	705+56.88	1.0
026-0054	856+89.35	1.0
	857+96.85	1.0
026-0055	1143+41.61	1.0
	1144+52.21	1.0
026-0073	278+58.92	1.0
	279+67.67	1.0
026-0074	206+70.44	1.0
	207+77.33	1.0
026-0075	679+07.55	1.0
	680+14.37	1.0
026-0076	816+08.23	1.0
	817+14.75	1.0
026-0077	334+46.92	1.0
	335+53.19	1.0
026-0078	988+97.56	1.0
	990+04.68	1.0
026-0079	1072+67.44	1.0
	1073+74.30	1.0
026-0080	1242+16.75	1.0
	1243+23.75	1.0
026-0087	395+55.30	1.0
	397+04.71	1.0
	TOTAL =	24.00

STRUCTURE 026-0032

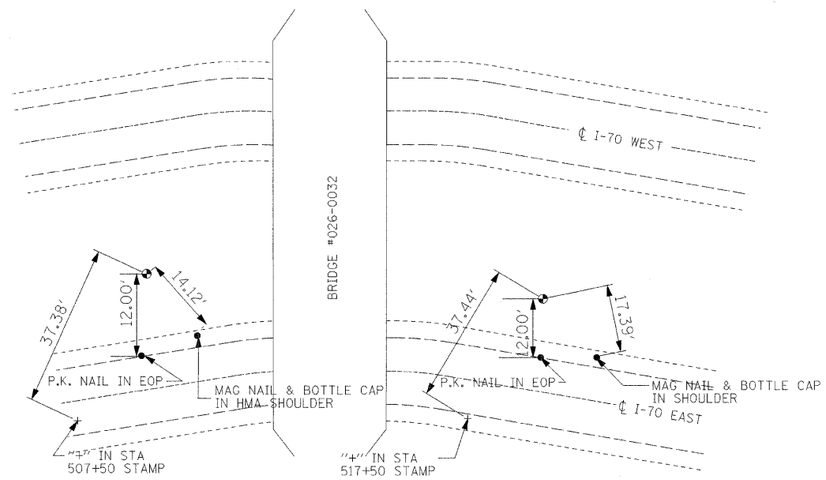

CONTROL POINT #3201
SET 5/8" IRON PIN ±4" DEEP
N 25339.8515
E 24066.2658
ELEV. 110.95

CONTROL POINT #3200
SET 5/8" IRON PIN ±4" DEEP
N 25000.0000
E 25000.0000
ELEV. 97.86'

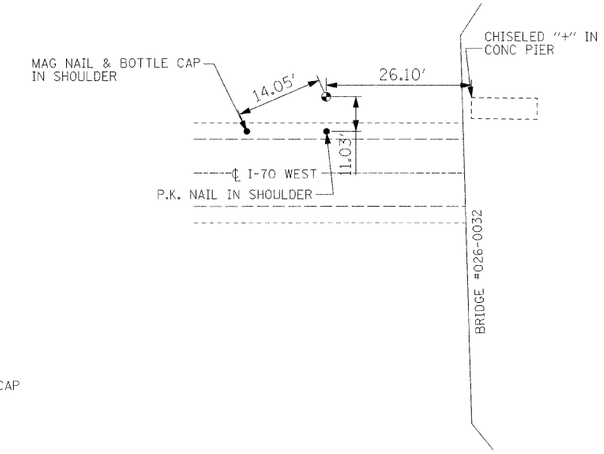

CONTROL POINT #3202
SET 5/8" IRON PIN FLUSH W/ GROUND
N 25319.2714
E 24458.3990
ELEV. 103.33'

STRUCTURE 026-0049

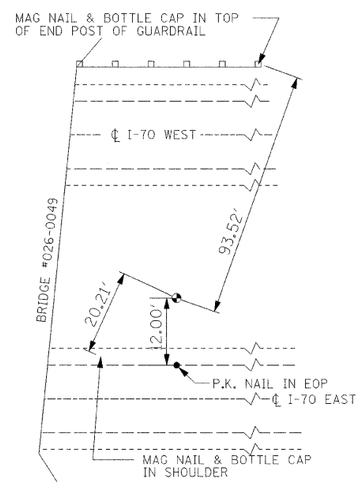

CONTROL POINT #2400
SET 5/8" IRON PIN ±4" DEEP
N 35000.0000
E 35000.0000
ELEV. 97.57'

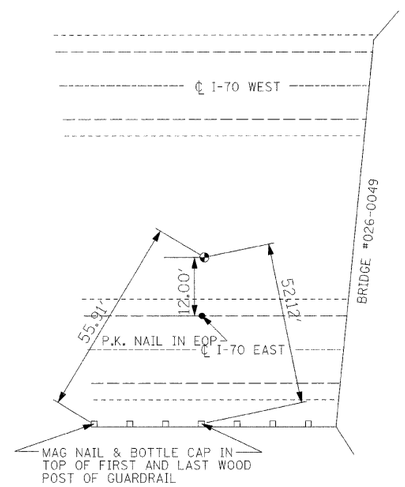

CONTROL POINT #2401
SET 5/8" IRON PIN ±4" DEEP
N 35294.9979
E 35307.9101
ELEV. 95.95'

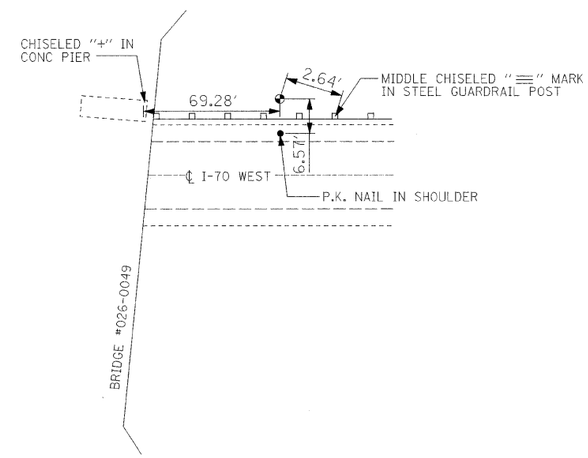

CONTROL POINT #2402
SET 5/8" IRON PIN FLUSH W/ GROUND
N 35025.5806
E 35367.7414
ELEV. 97.86'

FILE NAME = c:\pw_work\pwidot\swartzrw\dms50728\sht&p20_74313.dgn	USER NAME = swartzrw	DESIGNED -	REVISED -	STATE OF ILLINOIS DEPARTMENT OF TRANSPORTATION	TIE POINT DETAILS	F.A.I RTE. 70	SECTION D-7 SAFETY 2009-1	COUNTY FAYETTE	TOTAL SHEETS 100 / SHEET NO. 8
	PLOT SCALE = 20.0000 ' / IN.	DRAWN -	REVISED -					CONTRACT NO. 74313	
	PLOT DATE = 1/20/2009	CHECKED -	REVISED -		SCALE: NA / SHEET NO. 1 OF 7 SHEETS / STA. / TO STA.	FED. ROAD DIST. NO.	ILLINOIS	FED. AID PROJECT	
		DATE -	REVISED -						

STRUCTURE 026-0054

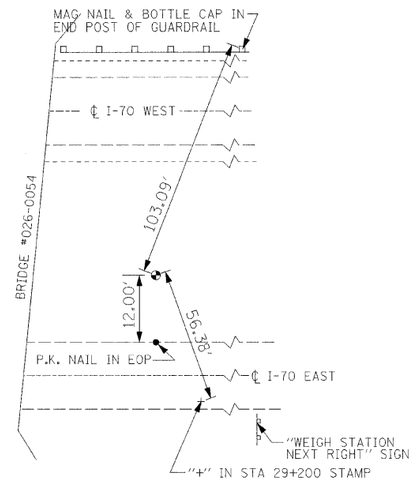

CONTROL POINT #1600
SET 5/8" IRON PIN ±4" DEEP
N 45000.0000
E 45000.0000
ELEV. 101.15'

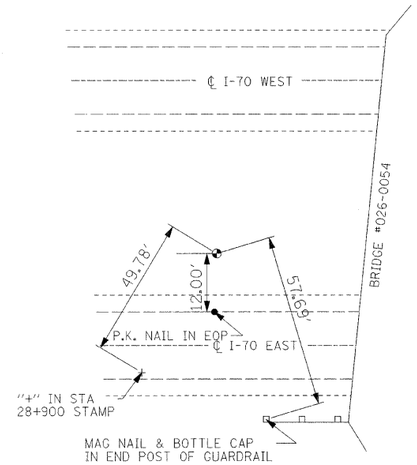

CONTROL POINT #1601
SET 5/8" IRON PIN ±4" DEEP
N 44731.8064
E 44141.0274
ELEV. 97.60

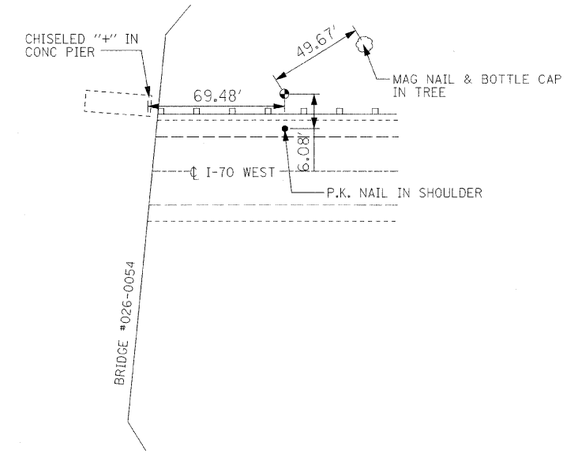

STRUCTURE 026-0055

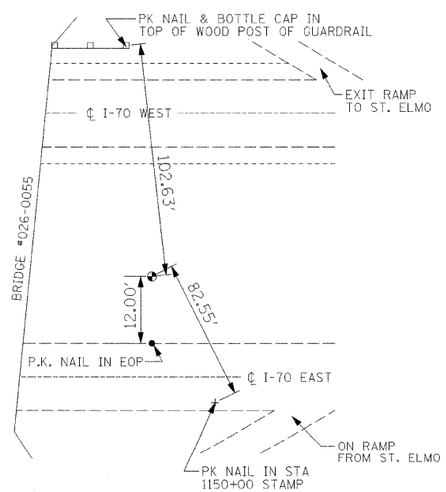

CONTROL POINT #400
SET 5/8" IRON PIN ±4" DEEP
N 60000.0000
E 60000.0000
ELEV. 96.32'

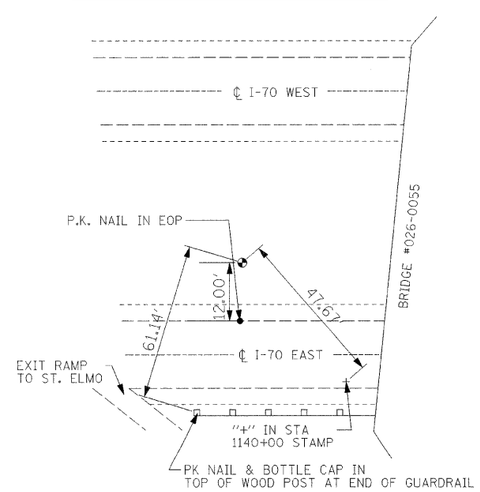

CONTROL POINT #401
SET 5/8" IRON PIN ±4" DEEP
N 59668.8901
E 59100.6080
ELEV. 97.11'

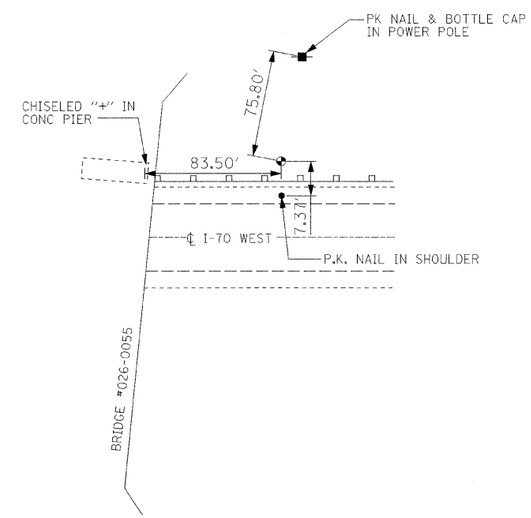

CONTROL POINT #402
SET 5/8" IRON PIN FLUSH W/ GROUND
N 59944.4290
E 59587.4367
ELEV. 97.38'

FILE NAME = c:\pw_work\pwidot\swartzrw\dms50728\sht&p2@_74313.dgn	USER NAME = swartzrw	DESIGNED -	REVISED -	STATE OF ILLINOIS DEPARTMENT OF TRANSPORTATION	TIE POINT DETAILS	F.A.I RTE. 70	SECTION D-7 SAFETY 2009-1	COUNTY FAYETTE	TOTAL SHEETS 100 / SHEET NO. 9
	PLOT SCALE = 20.0000 ' / IN.	DRAWN -	REVISED -					CONTRACT NO. 74313	
	PLOT DATE = 1/20/2009	CHECKED -	REVISED -						
		DATE -	REVISED -		SCALE: NA / SHEET NO. 2 OF 7 SHEETS / STA. / TO STA.	FED. ROAD DIST. NO.	ILLINOIS	FED. AID PROJECT	

STRUCTURE 026-0073

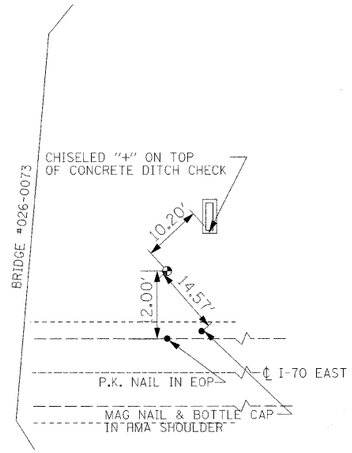

CONTROL POINT #4400
SET 5/8" IRON PIN ±4" DEEP
N 10000.0000
E 10000.0000
ELEV. 101.33'

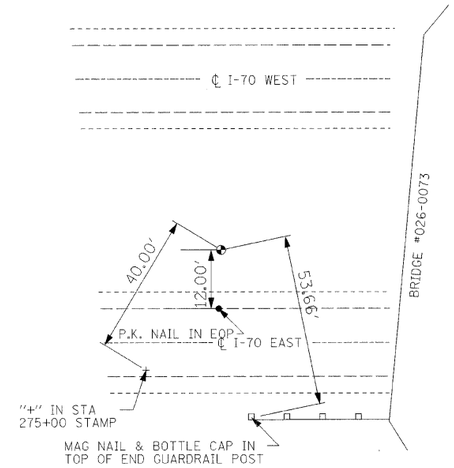

CONTROL POINT #4401
SET 5/8" IRON PIN ±4" DEEP
N 9630.3828
E 9207.3534
ELEV. 99.95'

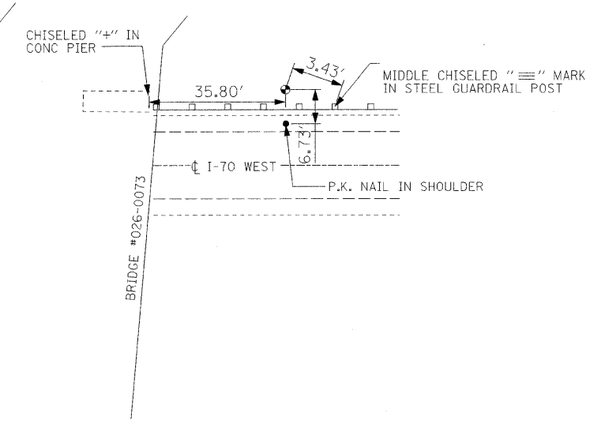

STRUCTURE 026-0074

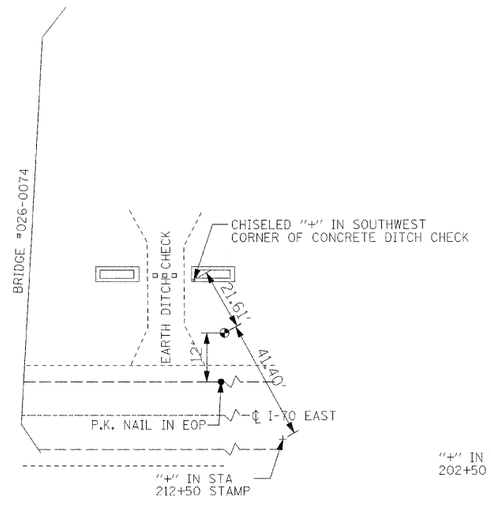

CONTROL POINT #4800
SET 5/8" IRON PIN ±4" DEEP
N 5000.0000
E 5000.0000
ELEV. 100.16'

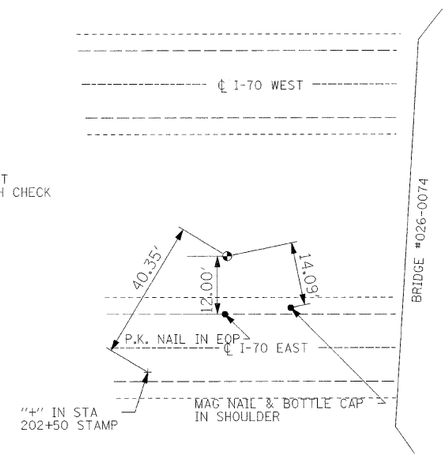

CONTROL POINT #4801
SET 5/8" IRON PIN ±4" DEEP
N 4609.3655
E 4122.1625
ELEV. 99.77'

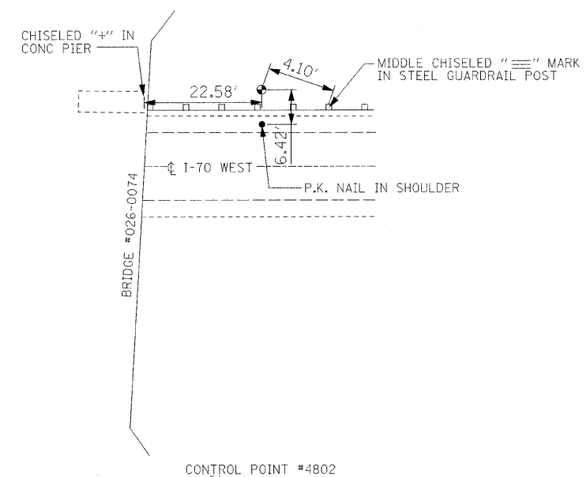

CONTROL POINT #4802
SET 5/8" IRON PIN FLUSH W/ GROUND
N 4905.5226
E 4555.7198
ELEV. 100.90'

FILE NAME = c:\pw_work\pwidot\swartzrw\dms50720\sht2&p20_74313.dgn	USER NAME = swartzrw	DESIGNED -	REVISED -	STATE OF ILLINOIS DEPARTMENT OF TRANSPORTATION	TIE POINT DETAILS	F.A.I RTE. 70	SECTION D-7 SAFETY 2009-1	COUNTY FAYETTE	TOTAL SHEETS 100	SHEET NO. 10
		DRAWN -	REVISED -					CONTRACT NO. 74313		
	PLOT SCALE = 20.0000 ' / IN.	CHECKED -	REVISED -							
	PLOT DATE = 1/20/2009	DATE -	REVISED -		SCALE: NA / SHEET NO. 3 OF 7 SHEETS / STA. TO STA.	FED. ROAD DIST. NO.	ILLINOIS	FED. AID PROJECT		

STRUCTURE 026-0075

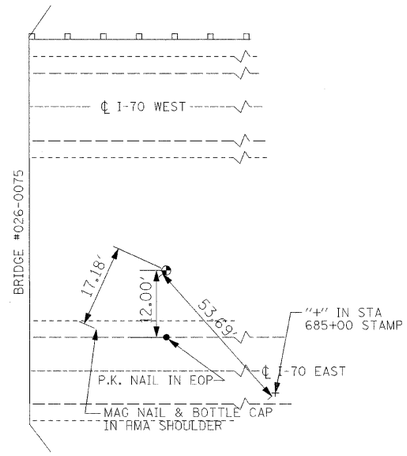

CONTROL POINT #2800
SET 5/8" IRON PIN ±4" DEEP
N 30000.0000
E 30000.0000
ELEV. 104.75'

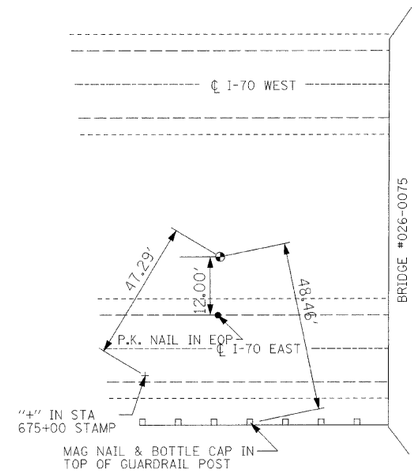

CONTROL POINT #2801
SET 5/8" IRON PIN ±4" DEEP
N 30000.0000
E 29070.7034
ELEV. 102.33'

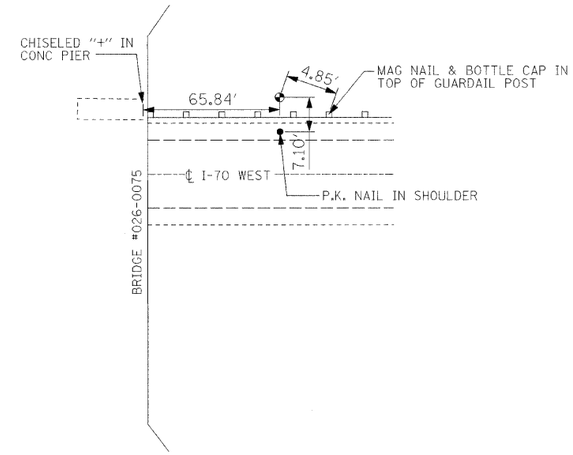

CONTROL POINT #2802
SET 5/8" IRON PIN ± 4" DEEP
N 30091.0658
E 29566.7378
ELEV. 103.99'

STRUCTURE 026-0076

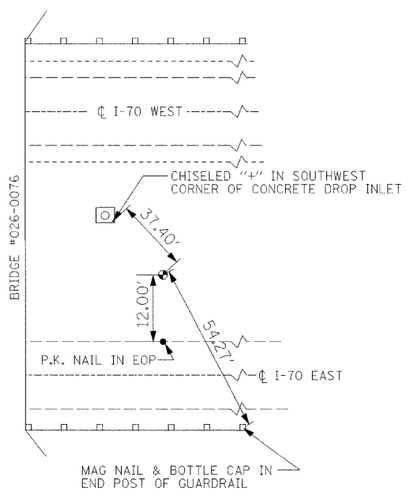

CONTROL POINT #2000
SET 5/8" IRON PIN ±4" DEEP
N 40000.0000
E 40000.0000
ELEV. 102.89'

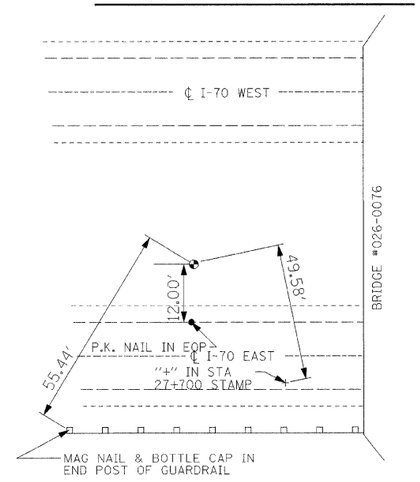

CONTROL POINT #2001
SET 5/8" IRON PIN ±4" DEEP
N 39726.2557
E 39247.8938
ELEV. 103.71'

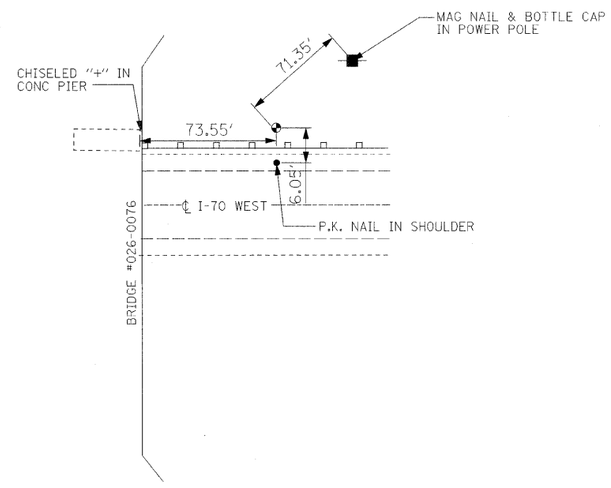

CONTROL POINT #2002
SET 5/8" IRON PIN FLUSH W/ GROUND
N 39980.4824
E 39686.9679
ELEV. 103.29'

FILE NAME = c:\pw_work\pwidot\swartzrw\dms50728\sht&p20_74313.dgn	USER NAME = swartzrw	DESIGNED -	REVISED -	STATE OF ILLINOIS DEPARTMENT OF TRANSPORTATION	TIE POINT DETAILS	F.A.I RTE. 70	SECTION D-7 SAFETY 2009-1	COUNTY FAYETTE	TOTAL SHEETS 100 / SHEET NO. 11
	PLOT SCALE = 20.0000 ' / IN.	DRAWN -	REVISED -					CONTRACT NO. 74313	
	PLOT DATE = 1/20/2009	CHECKED -	REVISED -		SCALE: NA / SHEET NO. 4 OF 7 SHEETS / STA. TO STA.	FED. ROAD DIST. NO.	ILLINOIS	FED. AID PROJECT	
		DATE -	REVISED -						

STRUCTURE 026-0077

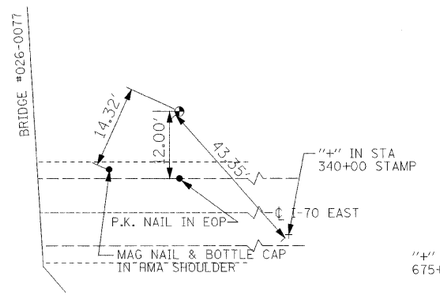

CONTROL POINT #4000
SET 5/8" IRON PIN
N 15000.0000
E 15000.0000
ELEV. 99.77'

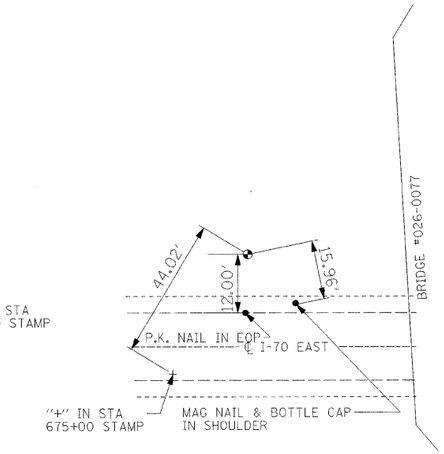

CONTROL POINT #4001
SET 5/8" IRON PIN
N 14596.6364
E 14134.9840
ELEV. 100.86'

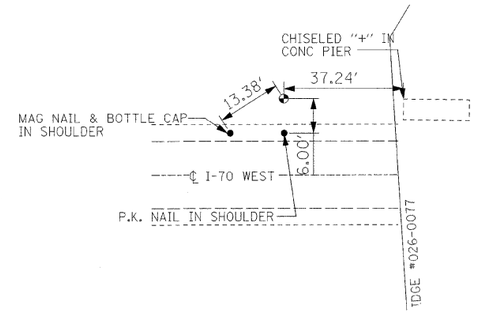

STRUCTURE 026-0078

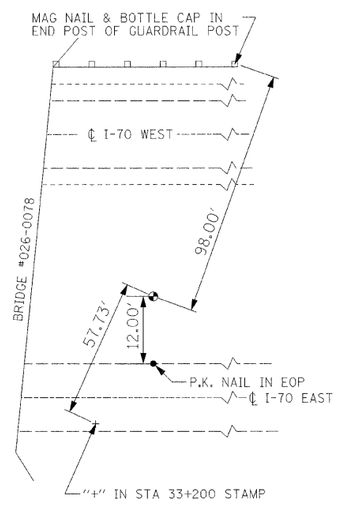

CONTROL POINT #1200
SET 5/8" IRON PIN ±4" DEEP
N 50000.0000
E 50000.0000
ELEV. 99.97'

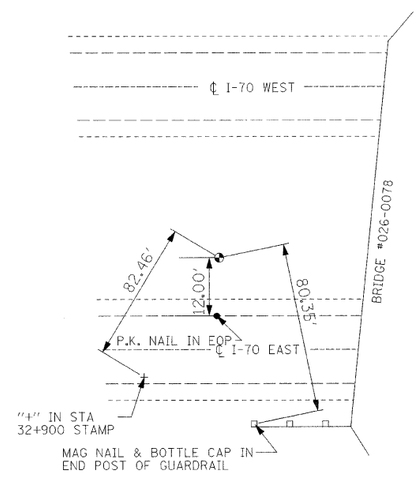

CONTROL POINT #1201
SET 5/8" IRON PIN ±4" DEEP
N 49685.6922
E 49097.0082
ELEV. 101.15'

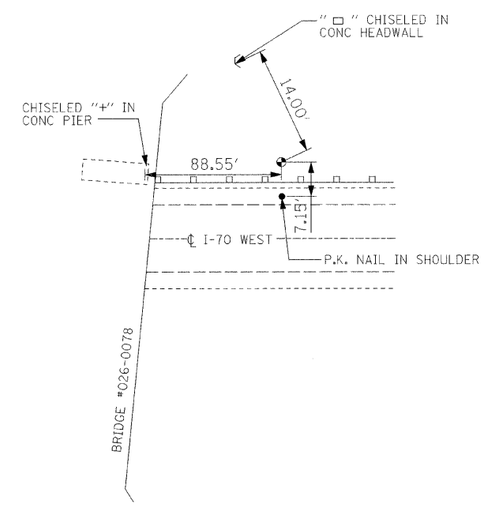

FILE NAME =	USER NAME = swartzrw	DESIGNED -	REVISED -	STATE OF ILLINOIS DEPARTMENT OF TRANSPORTATION	TIE POINT DETAILS	F.A.I RTE.	SECTION	COUNTY	TOTAL SHEETS	SHEET NO.
c:\pw_work\pwidot\swartzrw\dms50726\shtp&p20_74313.dgn		DRAWN -	REVISED -			70	D-7 SAFETY 2009-1	FAYETTE	100	12
	PLOT SCALE = 20.0000 ' / IN.	CHECKED -	REVISED -					CONTRACT NO. 74313		
	PLOT DATE = 1/20/2009	DATE -	REVISED -		SCALE: NA / SHEET NO. 5 OF 7 SHEETS / STA. / TO STA.	FED. ROAD DIST. NO.	ILLINOIS	FED. AID PROJECT		

STRUCTURE 026-0079

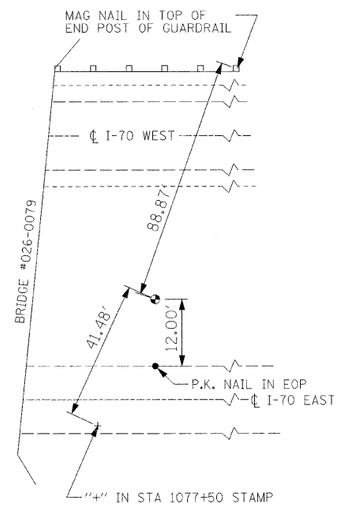

CONTROL POINT #800
SET5/8" IRON PIN ±4" DEEP
N 55000.0000
E 55000.0000
ELEV. 99.71'

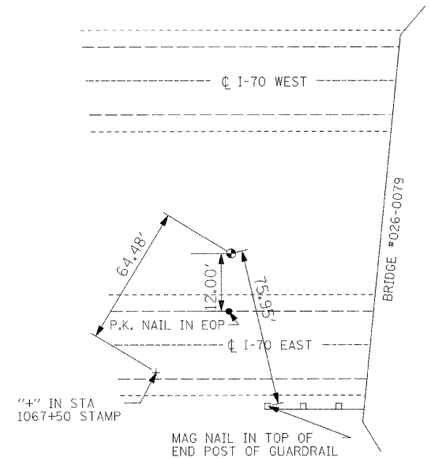

CONTROL POINT #801
SET5/8" IRON PIN ±4" DEEP
N 54661.9382
E 54091.5186
ELEV. 97.56'

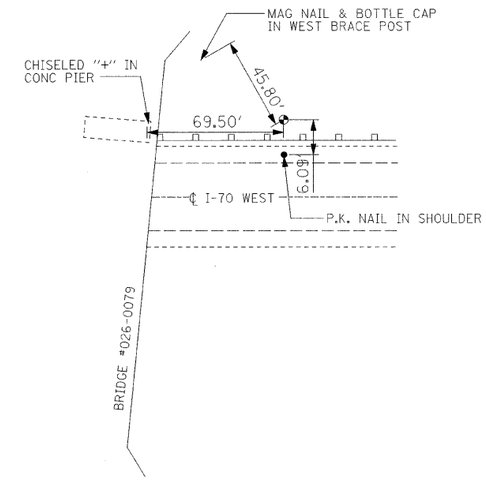

STRUCTURE 026-0080

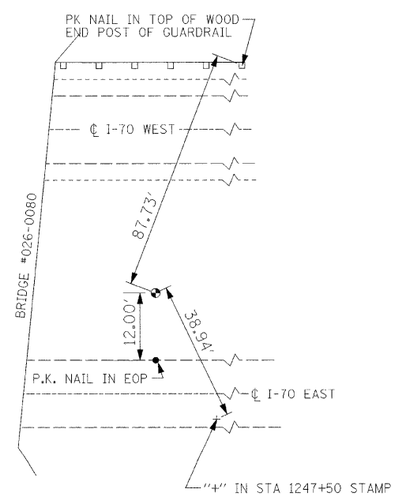

CONTROL POINT #1
SET5/8" IRON PIN ±4" DEEP
N 65000.0000
E 65000.0000
ELEV. 101.63'

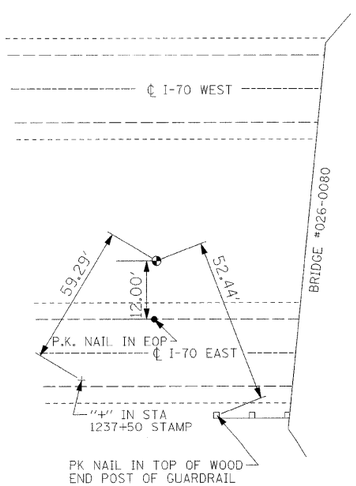

CONTROL POINT #2
SET5/8" IRON PIN ±4" DEEP
N 64674.5677
E 64122.7264
ELEV. 98.43'

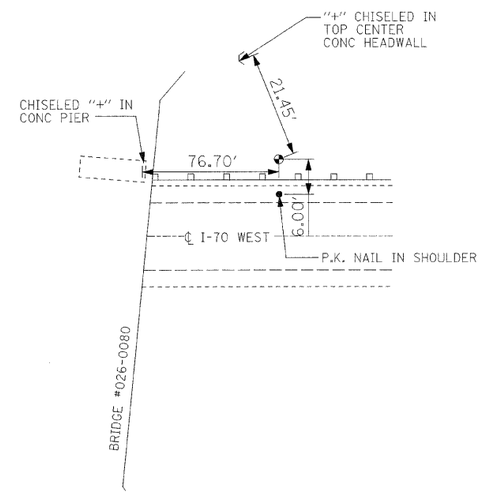

FILE NAME = c:\pw_work\pwidot\swartzrw\dms50728\sht8p20.74313.dgn	USER NAME = swartzrw	DESIGNED -	REVISED -	STATE OF ILLINOIS DEPARTMENT OF TRANSPORTATION	TIE POINT DETAILS	F.A.I RTE. 70	SECTION D-7 SAFETY 2009-1	COUNTY FAYETTE	TOTAL SHEETS 100 / SHEET NO. 13
		DRAWN -	REVISED -					CONTRACT NO. 74313	
	PLOT SCALE = 20.0000 ' / IN.	CHECKED -	REVISED -						
	PLOT DATE = 1/20/2009	DATE -	REVISED -		SCALE: NA / SHEET NO. 6 OF 7 SHEETS / STA. / TO STA.	FED. ROAD DIST. NO.	ILLINOIS	FED. AID PROJECT	

STRUCTURE 026-0087

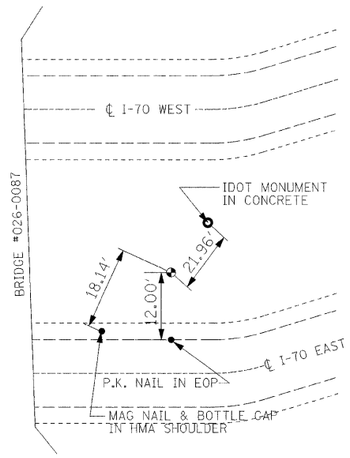

CONTROL POINT #3600
SET5/8" IRON PIN ±4" DEEP
N 20000.0000
E 20000.0000
ELEV. 529.23'

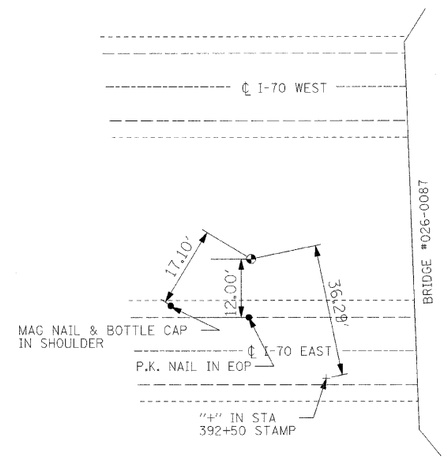

CONTROL POINT #3601
SET5/8" IRON PIN ±4" DEEP
N 19731.1124
E 19387.5297
ELEV. 528.99'

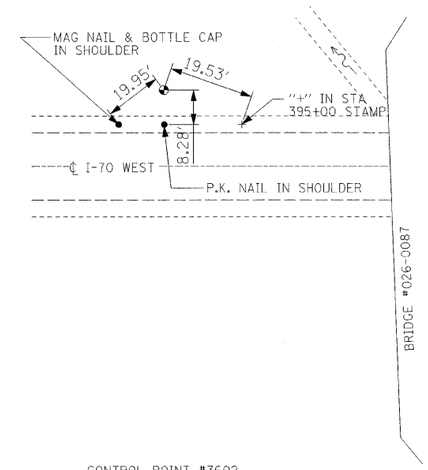

CONTROL POINT #3602
SET5/8" IRON PIN FLUSH W/ GROUND
N 19916.7247
E 19572.1392
ELEV. 529.99'

FILE NAME = c:\pw_work\pwidot\swartzrw\dms50720\sht8&p20_74313.dgn	USER NAME = swartzrw	DESIGNED -	REVISED -	STATE OF ILLINOIS DEPARTMENT OF TRANSPORTATION	TIE POINT DETAILS	F.A.I RTE. 70	SECTION D-7 SAFETY 2009-1	COUNTY FAYETTE	TOTAL SHEETS 100 / SHEET NO. 14
		DRAWN -	REVISED -					CONTRACT NO. 74313	
	PLOT SCALE = 20.0000 ' / IN.	CHECKED -	REVISED -						
	PLOT DATE = 1/20/2009	DATE -	REVISED -		SCALE: NA / SHEET NO. 7 OF 7 SHEETS / STA. TO STA.	FED. ROAD DIST. NO.	ILLINOIS	FED. AID PROJECT	

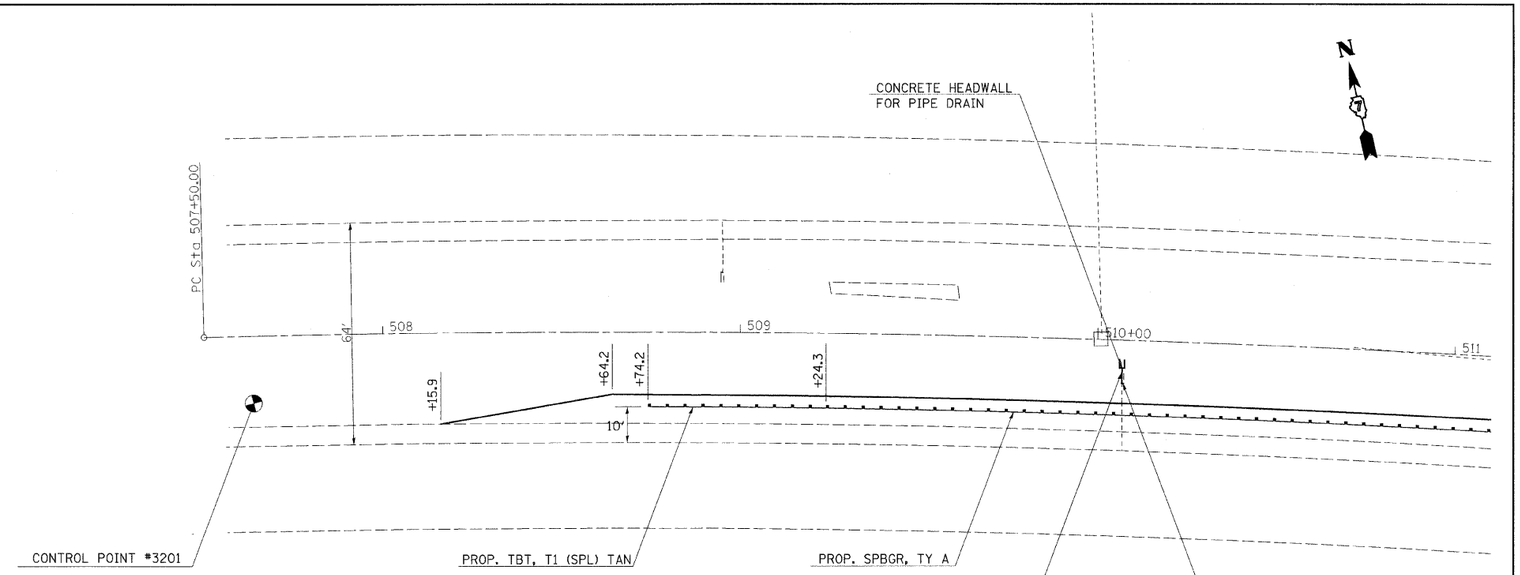

NOTE: REFERENCE CONTROL POINT NUMBERS TO FIELD BOOK

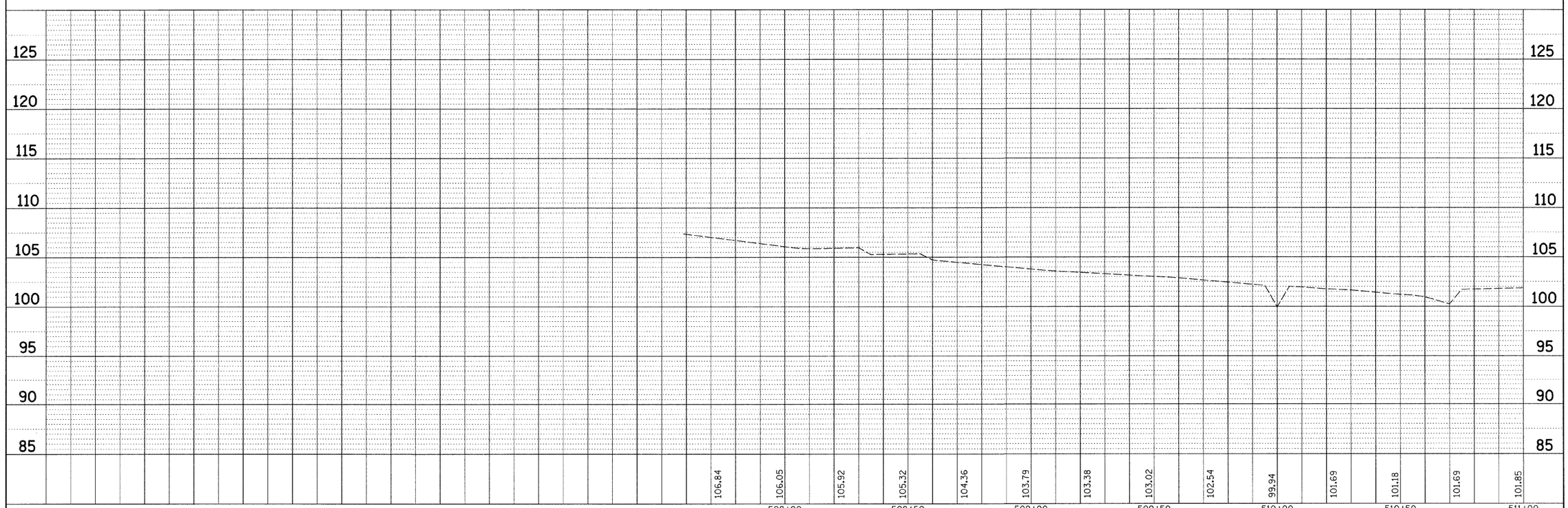

PLAN
NOTE BOOK NO.
SURVEYED
PLOTTED
ALIGNMENT CHECKED
R.O.W. CHECKED
CADD FILE NAME
BY
DATE

PROFILE
NOTE BOOK NO.
SURVEYED
PLOTTED
GRADES CHECKED
ALIGNMENT CHECKED
STRUCTURE NOTATNS CHKD
BY
DATE

FILE NAME = c:\pw_work\pwidot\swartzrw\dms50720\shtp&p20_74313.dgn	USER NAME = swartzrw	DESIGNED -	REVISED -
		DRAWN -	REVISED -
	PLOT SCALE = 20.0000 ' / IN.	CHECKED -	REVISED -
	PLOT DATE = 1/20/2009	DATE -	REVISED -

STATE OF ILLINOIS
DEPARTMENT OF TRANSPORTATION

PLAN PROFILE 026-0032

SCALE: 20 | SHEET NO. 1 OF 15 SHEETS | STA. 507+00 TO STA. 511+00

F.A.I RTE.	SECTION	COUNTY	TOTAL SHEETS	SHEET NO.
70	D-7 SAFETY 2009-1	FAYETTE	100	15

CONTRACT NO. 74313

FED. ROAD DIST. NO. | ILLINOIS | FED. AID PROJECT

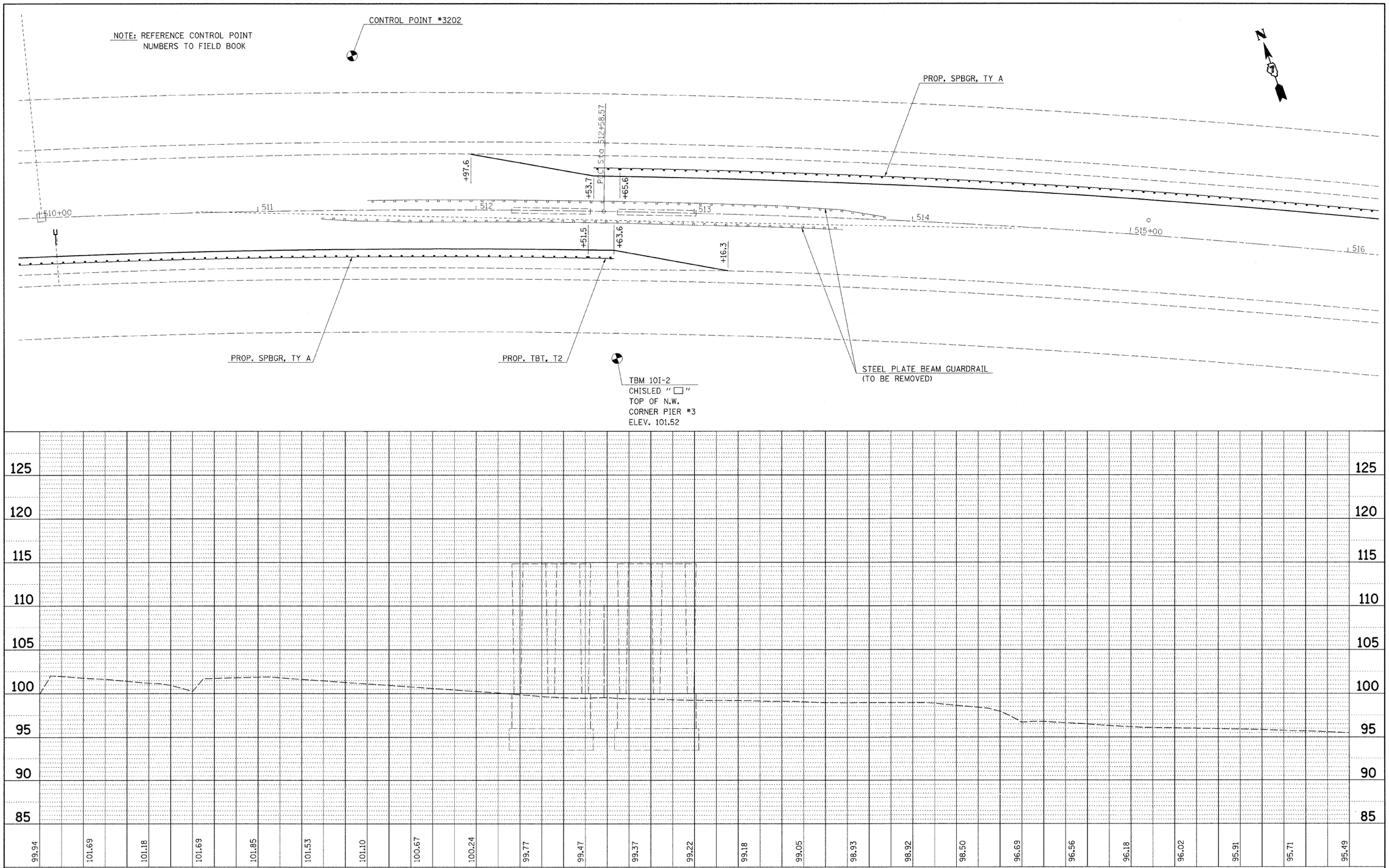

PLAN	BY	DATE
SURVEYED		
PLOTTED		
ALIGNMENT CHECKED		
R/W CHECKED		
CADD FILE NAME		
NOTE BOOK NO.		

PROFILE	BY	DATE
SURVEYED		
PLOTTED		
GRADES CHECKED		
R/W CHECKED		
STRUCTURE NOTAT'NS CH'KD		
NOTE BOOK NO.		

FILE NAME = c:\pw_work\pwidot\swartzrw\dms50728\shtp&p20_74313.dgn	USER NAME = swartzrw	DESIGNED -	REVISED -
		DRAWN -	REVISED -
	PLOT SCALE = 20.0000 ' / IN.	CHECKED -	REVISED -
	PLOT DATE = 1/20/2009	DATE -	REVISED -

STATE OF ILLINOIS
DEPARTMENT OF TRANSPORTATION

PLAN PROFILE 026-0032

SCALE: 20 | SHEET NO. 2 OF 15 SHEETS | STA. 510+00 TO STA. 516+00

F.A.I RTE.	SECTION	COUNTY	TOTAL SHEETS	SHEET NO.
70	D-7 SAFETY 2009-1	FAYETTE	100	16

CONTRACT NO. 74313

FED. ROAD DIST. NO. | ILLINOIS | FED. AID PROJECT

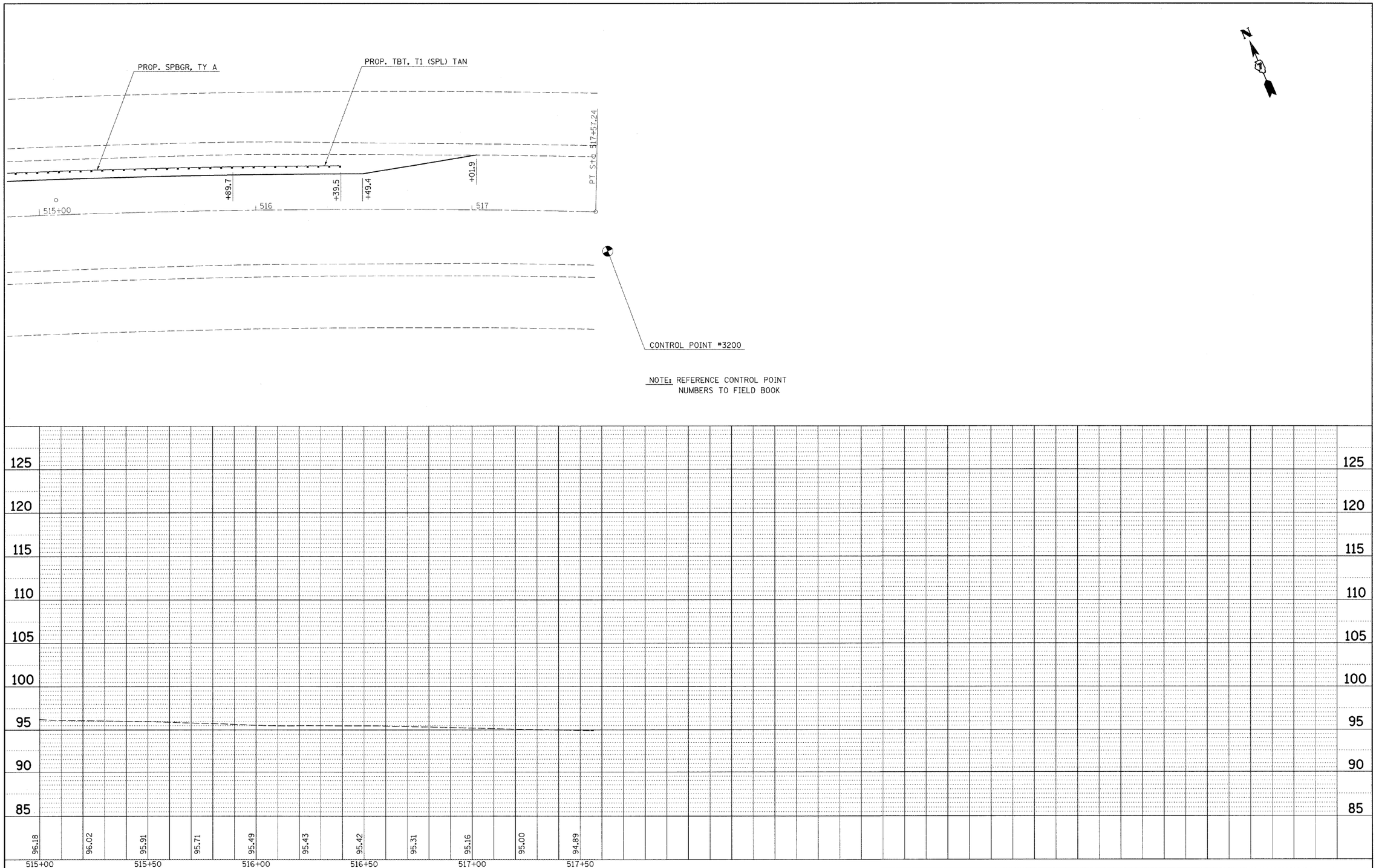

PLAN
SURVEYED
PLOTTED
NOTE BOOK
NO.
DRAWN
ALGNMNT CHECKED
PROFILE CHECKED
CADD FILE NAME
BY
DATE

PROFILE
SURVEYED
PLOTTED
NOTE BOOK
NO.
GRADES CHECKED
ALGNMNT CHECKED
STRUCTURE NOTATNS CHKD
By
DATE

FILE NAME = c:\pw_work\pwidot\swartzrw\dms50720\shtp&p20_74313.dgn	USER NAME = swartzrw	DESIGNED -	REVISED -
		DRAWN -	REVISED -
	PLOT SCALE = 20.0000 ' / IN.	CHECKED -	REVISED -
	PLOT DATE = 1/20/2009	DATE -	REVISED -

STATE OF ILLINOIS
DEPARTMENT OF TRANSPORTATION

PLAN PROFILE 026-0032

SCALE: 20 | SHEET NO. 3 OF 15 SHEETS | STA. 515+00 | TO STA. 517+00

F.A.I RTE.	SECTION	COUNTY	TOTAL SHEETS	SHEET NO.
70	D-7 SAFETY 2009-1	FAYETTE	100	17
		CONTRACT NO. 74313		

FED. ROAD DIST. NO. | ILLINOIS | FED. AID PROJECT

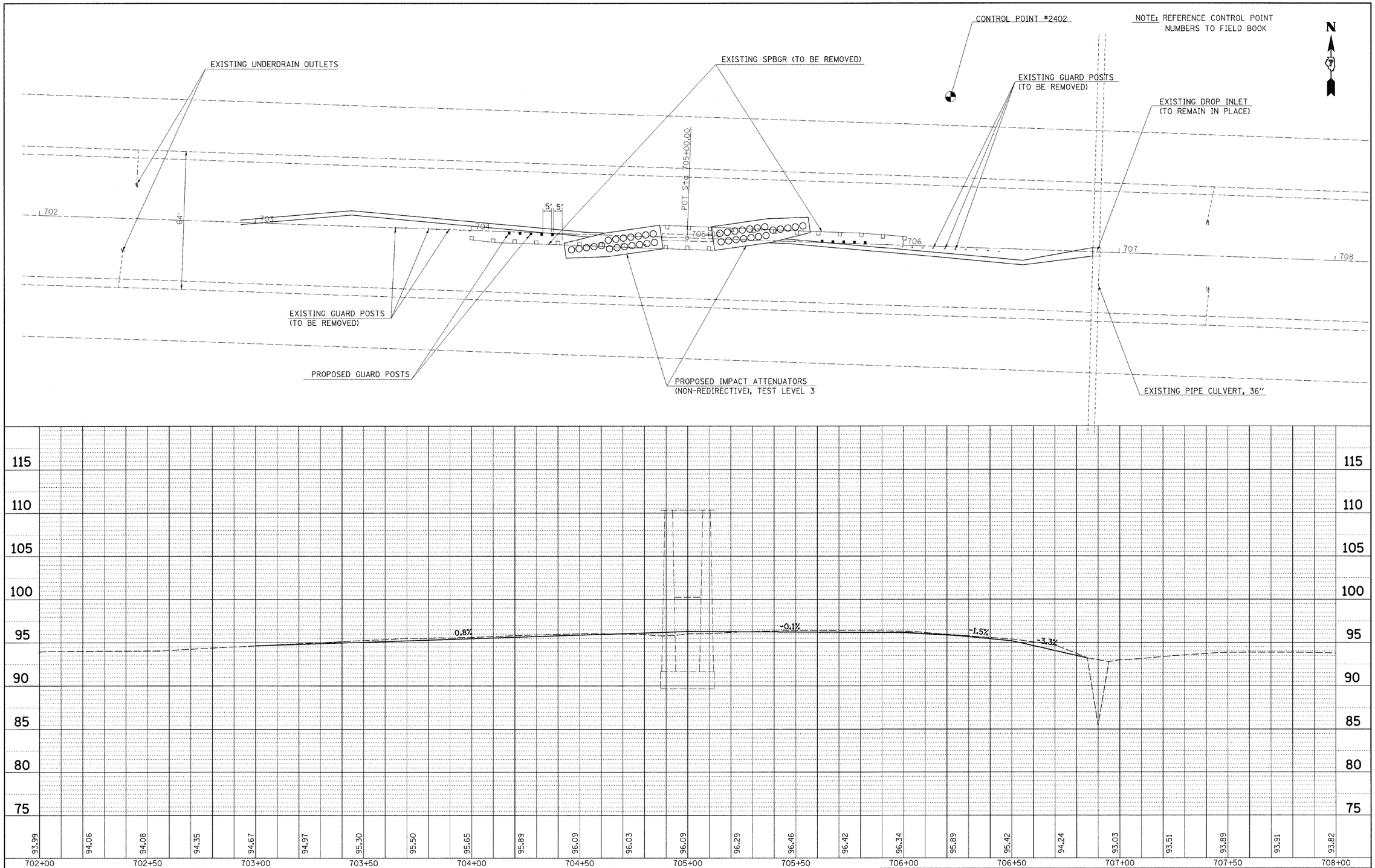

PLAN

NOTE BOOK No.	SURVEYED	PLOTTED	ALIGNMENT CHECKED	ALL WALKS CHECKED	CADD FILE NAME	BY	DATE

PROFILE

NOTE BOOK No.	SURVEYED	PLOTTED	GRADES CHECKED	ALL WALKS CHECKED	STRUCTURE NOTATIONS CHKD	BY	DATE

FILE NAME = c:\pw_work\pwidot\swartzrw\dms50720\shtp&p20_74313.dgn	USER NAME = swartzrw	DESIGNED -	REVISED -
		DRAWN -	REVISED -
	PLOT SCALE = 20.0000 ' / IN.	CHECKED -	REVISED -
	PLOT DATE = 1/20/2009	DATE -	REVISED -

STATE OF ILLINOIS
DEPARTMENT OF TRANSPORTATION

PLAN PROFILE 026-0049

SCALE: 20 | SHEET NO. 4 OF 15 SHEETS | STA. 702+00 TO STA. 708+00

F.A.I RTE.	SECTION	COUNTY	TOTAL SHEETS	SHEET NO.
70	D-7 SAFETY 2009-1	FAYETTE	100	18
		CONTRACT NO. 74313		

FED. ROAD DIST. NO. | ILLINOIS | FED. AID PROJECT

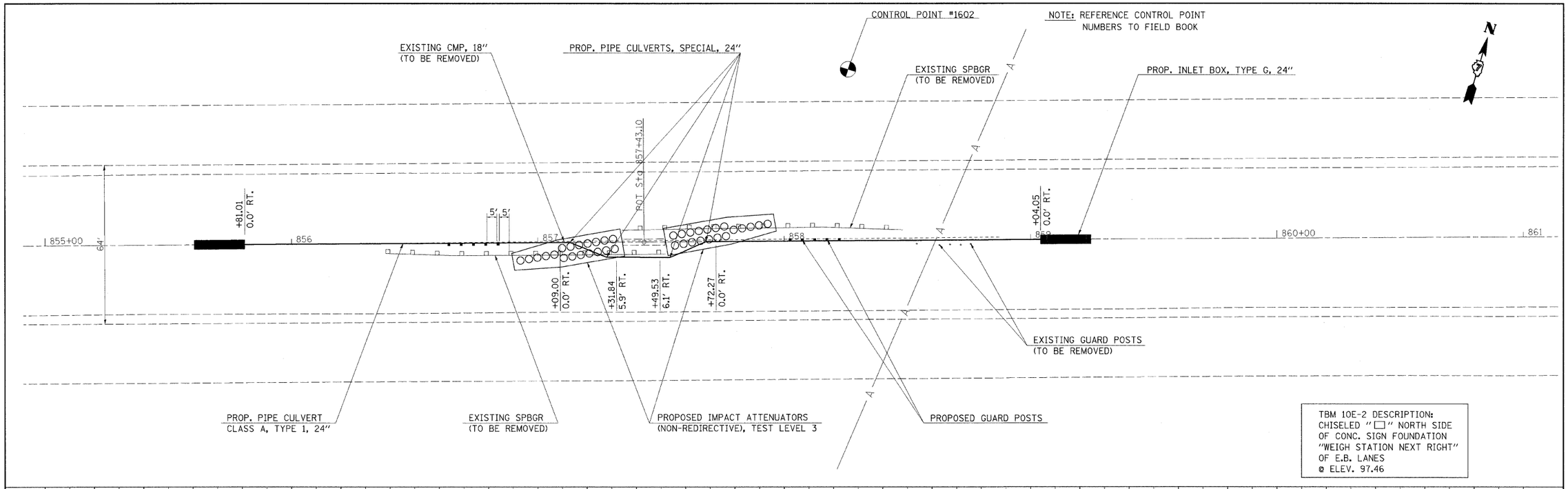

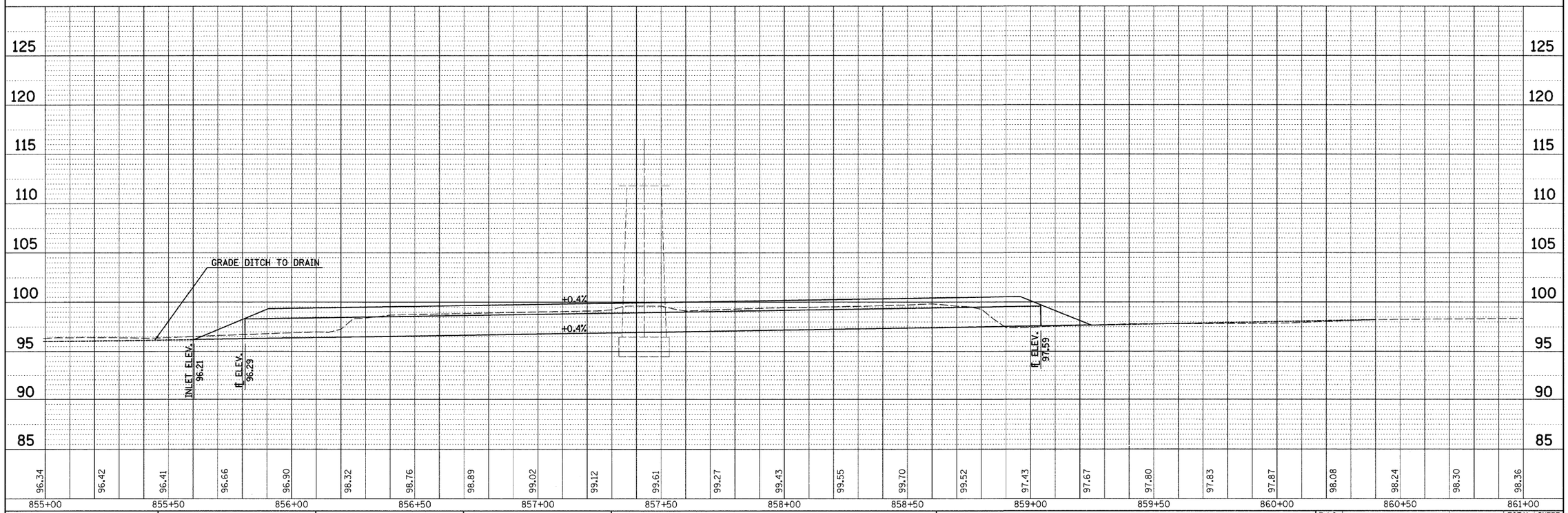

PLAN	BY	DATE
SURVEYED		
PLOTTED		
ALIGNMENT CHECKED		
DATA VERIFIED		
CADD FILE NAME		
NOTE BOOK NO.		

PROFILE	BY	DATE
SURVEYED		
PLOTTED		
GRADES CHECKED		
DATA VERIFIED		
STRUCTURE NOTATIONS CHKD		
NOTE BOOK NO.		

FILE NAME = c:\pw_work\pwidot\swartzrw\dms50728\sht p&r20_74313.dgn	USER NAME = swartzrw	DESIGNED -	REVISED -
		DRAWN -	REVISED -
	PLOT SCALE = 20.0000 ' / IN.	CHECKED -	REVISED -
	PLOT DATE = 1/20/2009	DATE -	REVISED -

STATE OF ILLINOIS
DEPARTMENT OF TRANSPORTATION

PLAN PROFILE 026-0054

SCALE: 20 | SHEET NO. 5 OF 15 SHEETS | STA. 855+00 TO STA. 861+00

F.A.I RTE.	SECTION	COUNTY	TOTAL SHEETS	SHEET NO.
70	D-7 SAFETY 2009-1	FAYETTE	100	19
		CONTRACT NO. 74313		

FED. ROAD DIST. NO. | ILLINOIS | FED. AID PROJECT

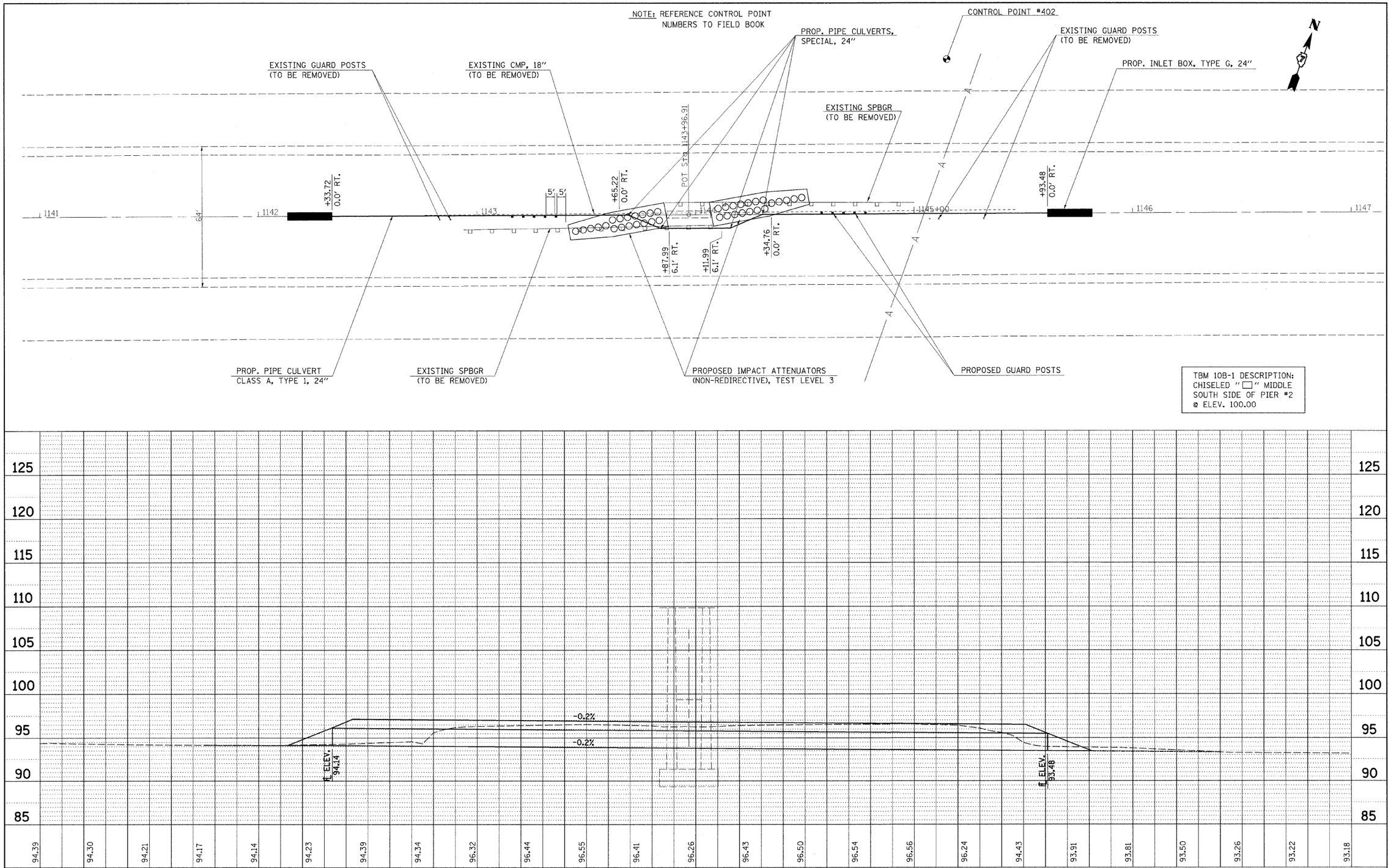

PLAN		BY	DATE
SURVEYED			
PLOTTED			
ALIGNMENT CHECKED			
RIGHT-OF-WAY CHECKED			
NOTE BOOK NO.	CADD FILE NAME		

PROFILE		BY	DATE
SURVEYED			
PLOTTED			
GRADES CHECKED			
NOTE BOOK NO.	STRUCTURE NOTATNS CH'KD		

FILE NAME = c:\pw_work\pwidot\swartzrw\dms50728\shtp&p20_74313.dgn	USER NAME = swartzrw	DESIGNED -	REVISED -
		DRAWN -	REVISED -
	PLOT SCALE = 20.0000 ' / IN.	CHECKED -	REVISED -
	PLOT DATE = 1/20/2009	DATE -	REVISED -

STATE OF ILLINOIS
DEPARTMENT OF TRANSPORTATION

PLAN PROFILE 026-0055

SCALE: 20 | SHEET NO. 6 OF 15 SHEETS | STA. 1141+00 TO STA. 1147+00

F.A.I RTE.	SECTION	COUNTY	TOTAL SHEETS	SHEET NO.
70	D-7 SAFETY 2009-1	FAYETTE	100	20
		CONTRACT NO. 74313		
FED. ROAD DIST. NO.	ILLINOIS	FED. AID PROJECT		

TBM 10L-1 DESCRIPTION:
CHISELED "□" TOP CENTER OF CONCRETE HEADWALL FOR 2.5' X 4' BOX CULVERT ON SOUTH SIDE OF EAST BOUND I-70 IN SOUTHWEST QUADRANT OF BRIDGE #26-0073
ASSUMED ELEV.=100.00'

NOTE: REFERENCE CONTROL POINT NUMBERS TO FIELD BOOK

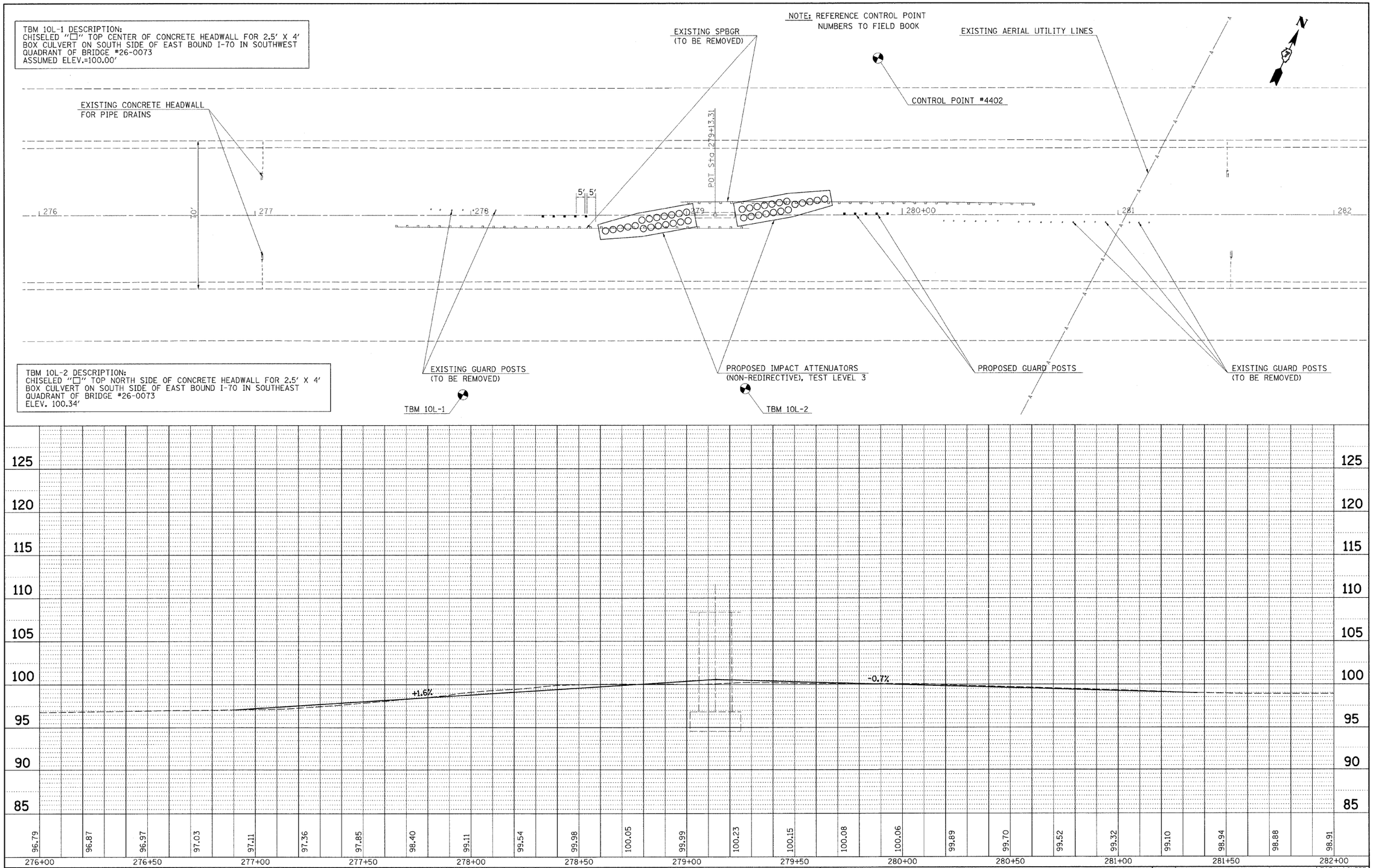

TBM 10L-2 DESCRIPTION:
CHISELED "□" TOP NORTH SIDE OF CONCRETE HEADWALL FOR 2.5' X 4' BOX CULVERT ON SOUTH SIDE OF EAST BOUND I-70 IN SOUTHEAST QUADRANT OF BRIDGE #26-0073
ELEV. 100.34'

PLAN		BY	DATE
NOTE BOOK NO.	SURVEYED		
	PLOTTED		
	ALIGNMENT CHECKED		
	ROWS CHECKED		
	CADD FILE NAME		

PROFILE		BY	DATE
NOTE BOOK NO.	SURVEYED		
	PLOTTED		
	GRADES CHECKED		
	ROWS CHECKED		
	STRUCTURE NOTATNS CHKD		

FILE NAME = c:\pw_work\pwidot\swartzrw\dms50728\shtp&p20_74313.dgn	USER NAME = swartzrw	DESIGNED -	REVISED -
		DRAWN -	REVISED -
	PLOT SCALE = 20.0000 ' / IN.	CHECKED -	REVISED -
	PLOT DATE = 1/20/2009	DATE -	REVISED -

STATE OF ILLINOIS
DEPARTMENT OF TRANSPORTATION

PLAN PROFILE 026-0073

SCALE: 20 | SHEET NO. 7 OF 15 SHEETS | STA. 276+00 TO STA. 282+00

F.A.I RTE.	SECTION	COUNTY	TOTAL SHEETS	SHEET NO.
70	D-7 SAFETY 2009-1	FAYETTE	100	21
		CONTRACT NO. 74313		

FED. ROAD DIST. NO. | ILLINOIS | FED. AID PROJECT

TBM 10M-1 DESCRIPTION:
CHISELED "□" ON TOP NORTH SIDE OF CONCRETE HEADWALL FOR 36" RCP IN SOUTHWEST QUADRANT OF BRIDGE #026-0074 IN SOUTH RIGHT-OF-WAY OF I-70.
ASSUMED ELEV.=100.00'

TBM 10M-2 DESCRIPTION:
CHISELED "□" ON TOP NORTH SIDE OF CONCRETE HEADWALL FOR 36" RCP IN SOUTHEAST QUADRANT OF BRIDGE #26-0074 IN SOUTH RIGHT-OF-WAY OF I-70
ELEV. 99.37'

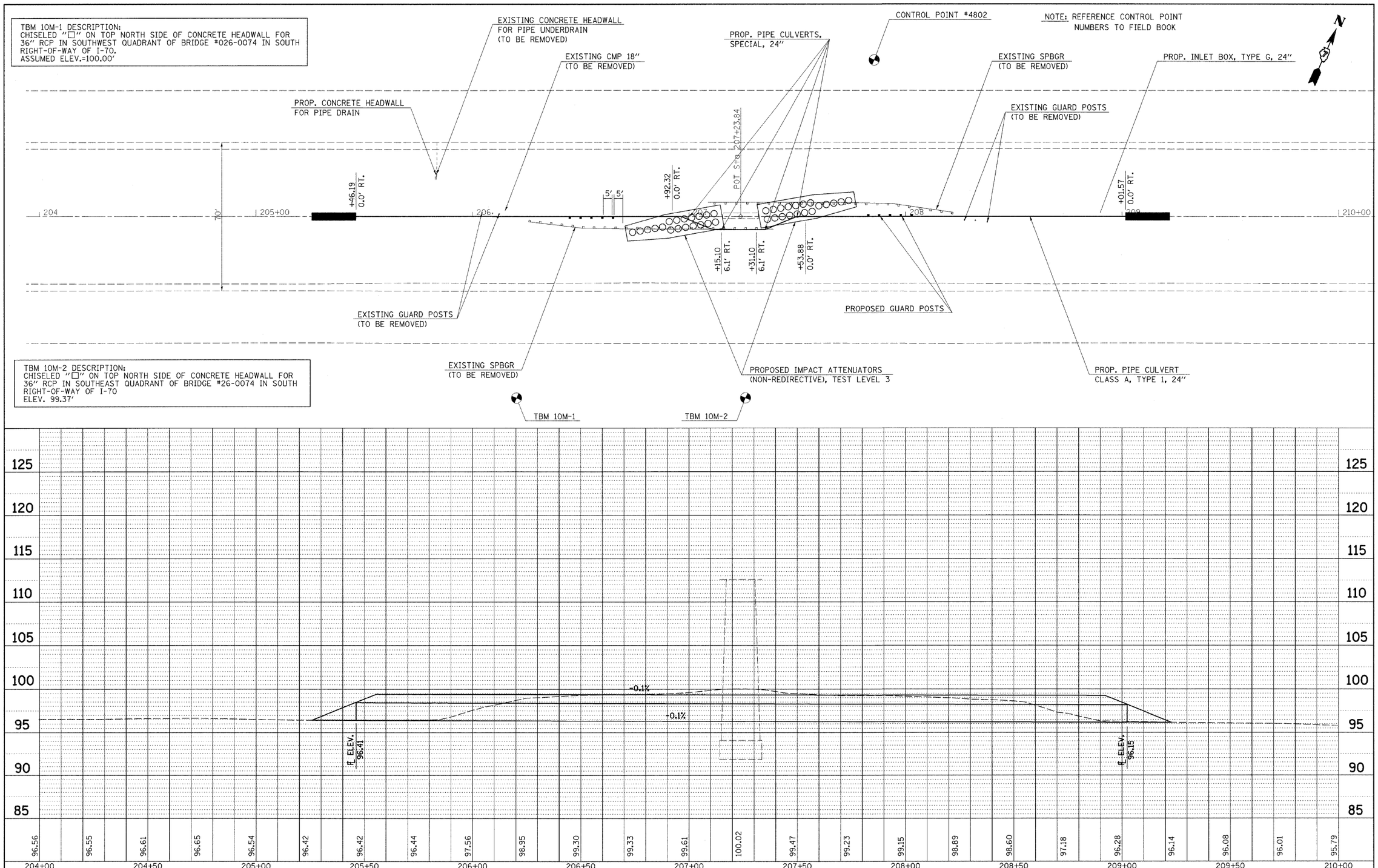

PLAN

NOTE BOOK NO.	SURVEYED	PLOTTED	ALIGNMENT CHECKED	CADD FILE NAME	BY	DATE

PROFILE

NOTE BOOK NO.	SURVEYED	PLOTTED	GRADES CHECKED	ALL NOTES & STRUCTURE NOTATIONS CHK'D	BY	DATE

FILE NAME = c:\pw_work\pwidot\swartzrw\dms50728\shtp&p28_74313.dgn	USER NAME = swartzrw	DESIGNED -	REVISED -
	PLOT SCALE = 20.0000 ' / IN.	DRAWN -	REVISED -
	PLOT DATE = 1/20/2009	CHECKED -	REVISED -
		DATE -	REVISED -

STATE OF ILLINOIS
DEPARTMENT OF TRANSPORTATION

PLAN PROFILE 026-0074

SCALE: 20 | SHEET NO. 8 OF 15 SHEETS | STA. 204+00 TO STA. 210+00

F.A.I RTE.	SECTION	COUNTY	TOTAL SHEETS	SHEET NO.
70	D-7 SAFETY 2009-1	FAYETTE	100	22

CONTRACT NO. 74313

FED. ROAD DIST. NO. | ILLINOIS | FED. AID PROJECT

TBM 10H-1 DESCRIPTION:
CHISELED "□" @ TOP CENTER OF CONCRETE HEADWALL FOR 36" CMP IN NORTHWEST QUADRANT OF BRIDGE #26-0075; WEST OF CENTER OF BRIDGE IN NORTH RIGHT-OF-WAY OF I-70
ASSUMED ELEV.=100.00'

CONTROL POINT #2802

NOTE: REFERENCE CONTROL POINT NUMBERS TO FIELD BOOK

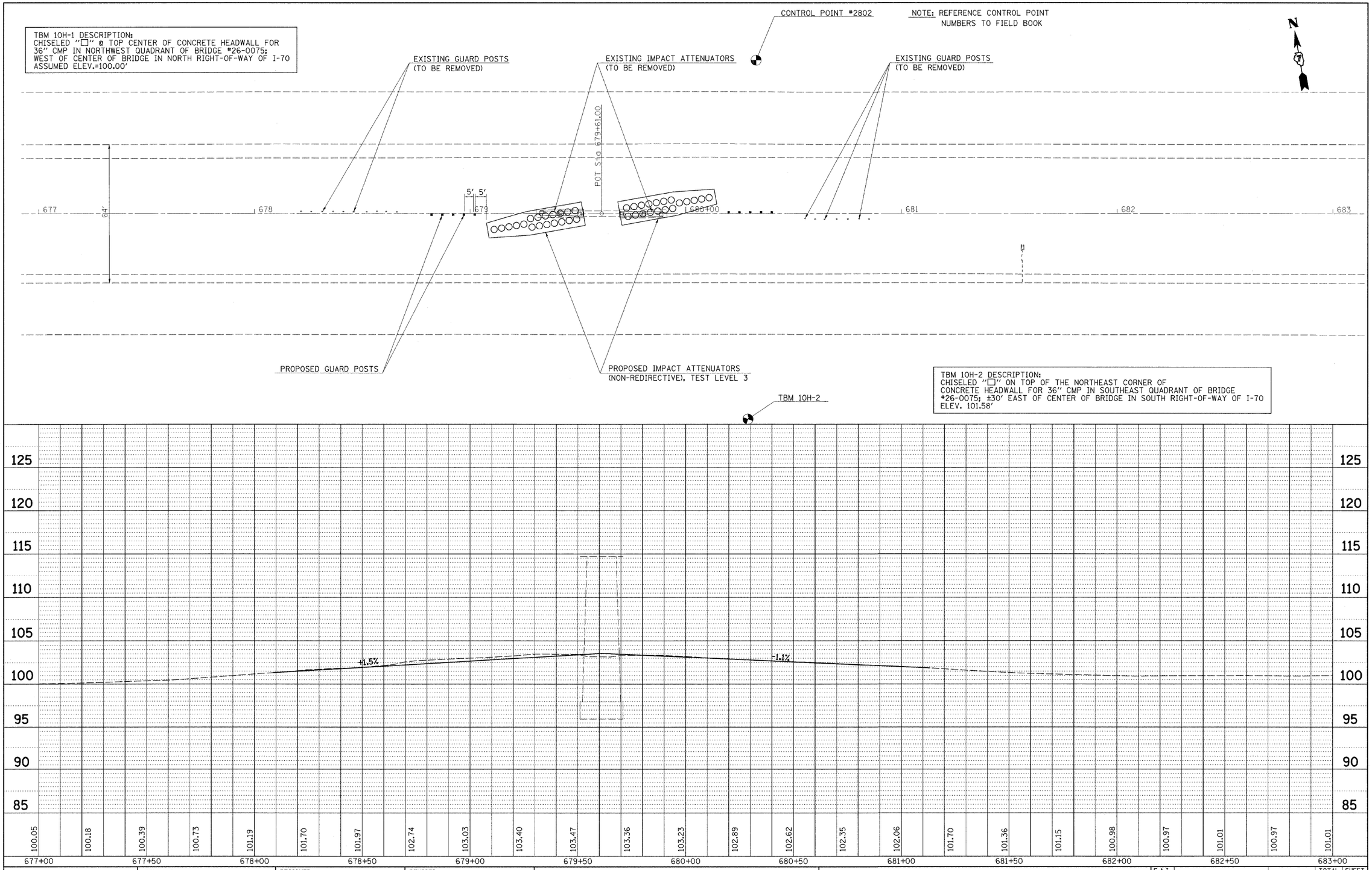

TBM 10H-2 DESCRIPTION:
CHISELED "□" ON TOP OF THE NORTHEAST CORNER OF CONCRETE HEADWALL FOR 36" CMP IN SOUTHEAST QUADRANT OF BRIDGE #26-0075; ±30' EAST OF CENTER OF BRIDGE IN SOUTH RIGHT-OF-WAY OF I-70
ELEV. 101.58'

PLAN	BY	DATE
SURVEYED		
PLOTTED		
ALIGNMENT CHECKED		
GRADES CHECKED		
CADD FILE NAME		
NOTE BOOK NO.		

PROFILE	BY	DATE
SURVEYED		
PLOTTED		
GRADES CHECKED		
ALIGNMENT CHECKED		
STRUCTURE NOTATNS CHKD		
NOTE BOOK NO.		

FILE NAME = c:\pw_work\pwidot\swartzrw\dms50728\shtp&&20_74313.dgn	USER NAME = swartzrw	DESIGNED -	REVISED -
		DRAWN -	REVISED -
	PLOT SCALE = 20.0000 ' / IN.	CHECKED -	REVISED -
	PLOT DATE = 1/20/2009	DATE -	REVISED -

STATE OF ILLINOIS
DEPARTMENT OF TRANSPORTATION

PLAN PROFILE 026-0075

SCALE: 20 | SHEET NO. 9 OF 15 SHEETS | STA. 677+00 TO STA. 683+00

F.A.I RTE.	SECTION	COUNTY	TOTAL SHEETS	SHEET NO.
70	D-7 SAFETY 2009-1	FAYETTE	100	23
		CONTRACT NO. 74313		
FED. ROAD DIST. NO.	ILLINOIS	FED. AID PROJECT		

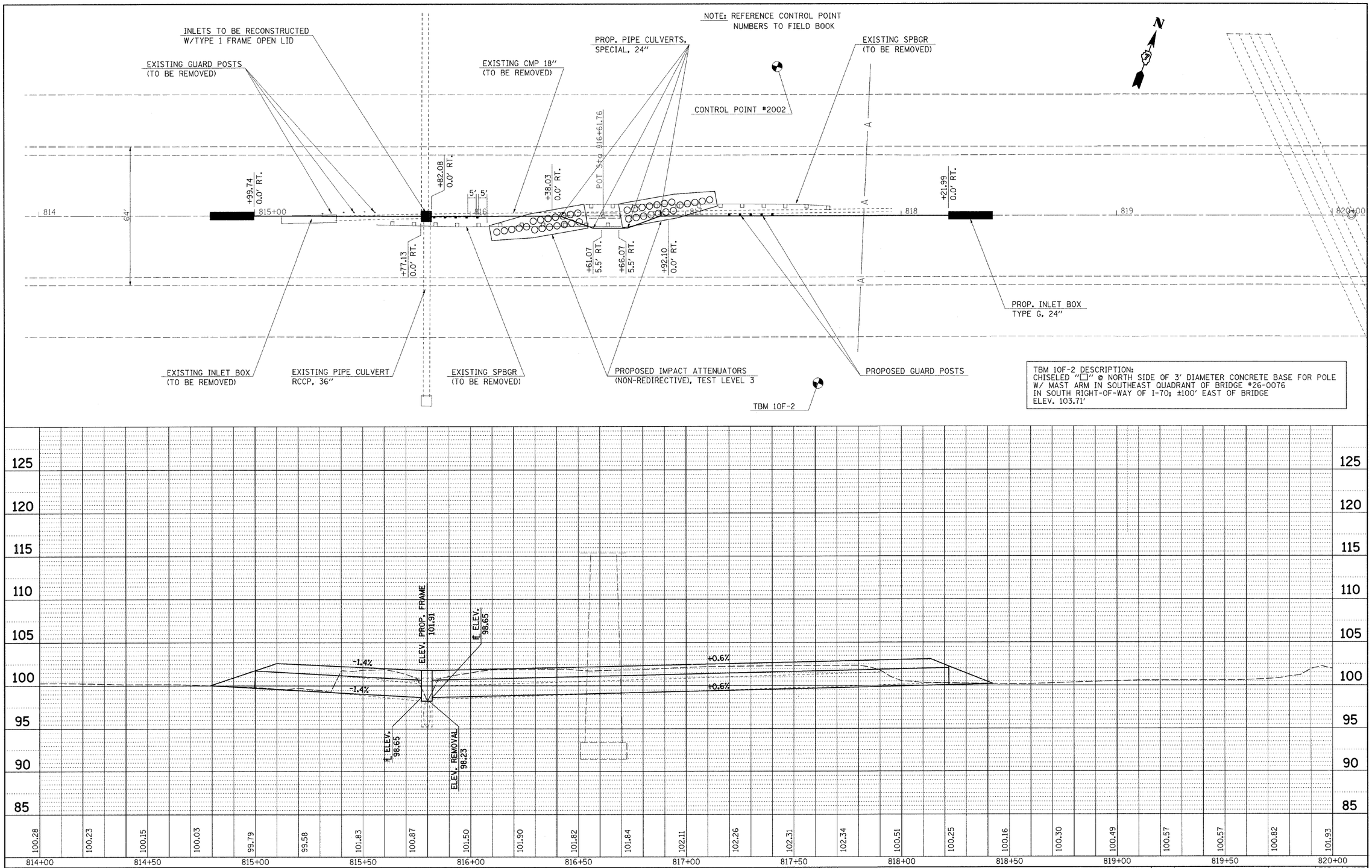

PLAN — SURVEYED / PLOTTED / GRADES CHECKED / ALIGNMENT CHECKED / CADD FILE NAME — NOTE BOOK NO. — BY — DATE

PROFILE — SURVEYED / PLOTTED / GRADES CHECKED / ALIGNMENT CHECKED / STRUCTURE NOTATIONS CHKD — NOTE BOOK NO. — BY — DATE

FILE NAME = c:\pw_work\pwidot\swartzrw\dms50728\shtp&p20_74313.dgn	USER NAME = swartzrw	DESIGNED -	REVISED -
		DRAWN -	REVISED -
	PLOT SCALE = 20.0000 ' / IN.	CHECKED -	REVISED -
	PLOT DATE = 1/20/2009	DATE -	REVISED -

STATE OF ILLINOIS
DEPARTMENT OF TRANSPORTATION

PLAN PROFILE 026-0076

SCALE: 20 | SHEET NO. 10 OF 15 SHEETS | STA. 814+00 TO STA. 820+00

F.A.I RTE.	SECTION	COUNTY	TOTAL SHEETS	SHEET NO.
70	D-7 SAFETY 2009-1	FAYETTE	100	24
		CONTRACT NO. 74313		
FED. ROAD DIST. NO.	ILLINOIS	FED. AID PROJECT		

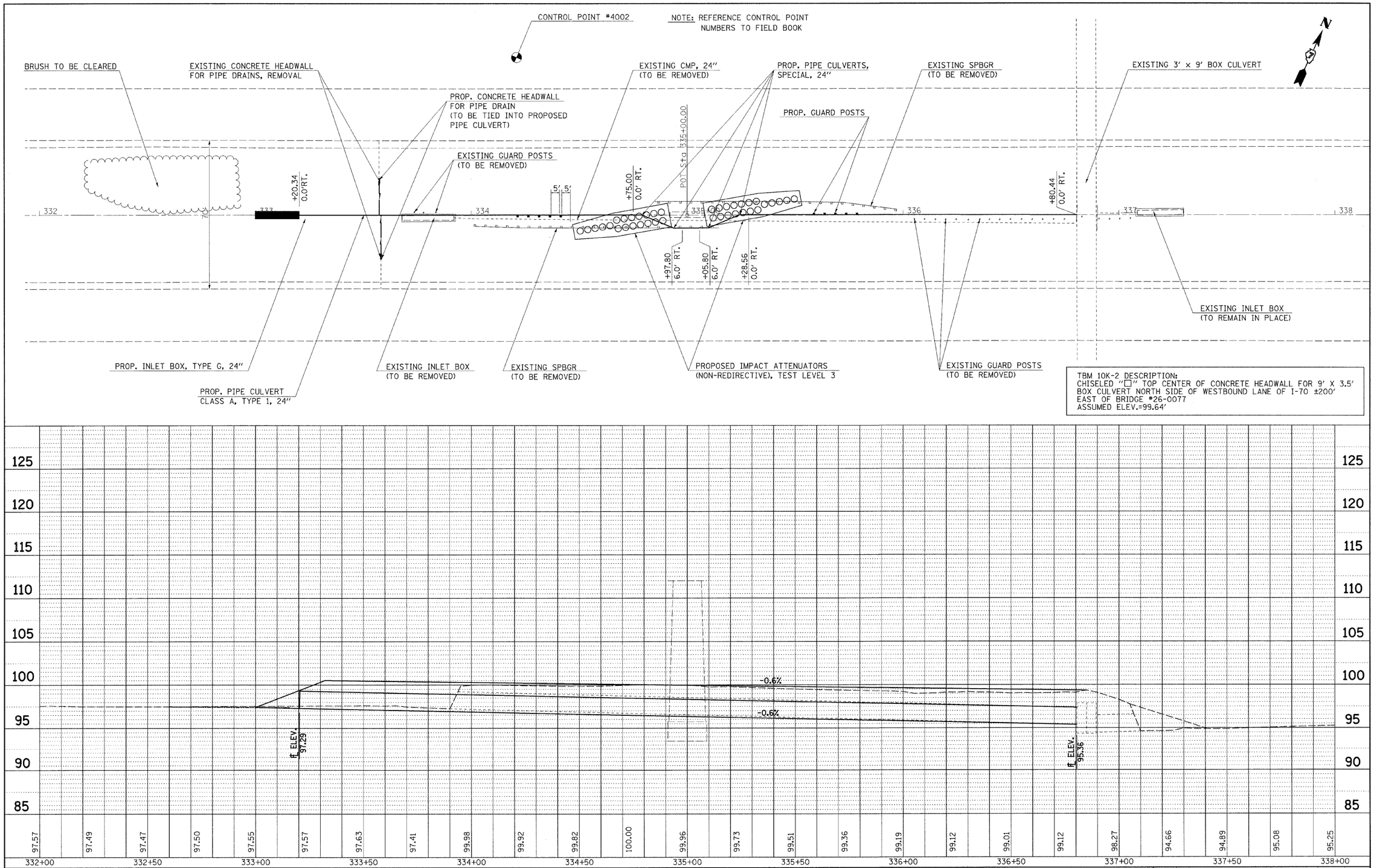

PLAN

NOTE BOOK NO.	SURVEYED	PLOTTED	ALIGNMENT CHECKED	CADD FILE NAME	BY	DATE

PROFILE

NOTE BOOK NO.	SURVEYED	PLOTTED	GRADES CHECKED	ALIGNMENT CHECKED	STRUCTURE NOTATNS CHK'D	BY	DATE

FILE NAME = c:\pw_work\pwidot\swartzrw\dms50728\shtp&p20_74313.dgn	USER NAME = swartzrw	DESIGNED -	REVISED -
	PLOT SCALE = 20.0000 ' / IN.	DRAWN -	REVISED -
	PLOT DATE = 1/20/2009	CHECKED -	REVISED -
		DATE -	REVISED -

STATE OF ILLINOIS
DEPARTMENT OF TRANSPORTATION

PLAN PROFILE 026-0077

SCALE: 20 | SHEET NO. 11 OF 15 SHEETS | STA. 332+00 TO STA. 338+00

F.A.I RTE.	SECTION	COUNTY	TOTAL SHEETS	SHEET NO.
70	D-7 SAFETY 2009-1	FAYETTE	100	25
		CONTRACT NO. 74313		

FED. ROAD DIST. NO. | ILLINOIS | FED. AID PROJECT

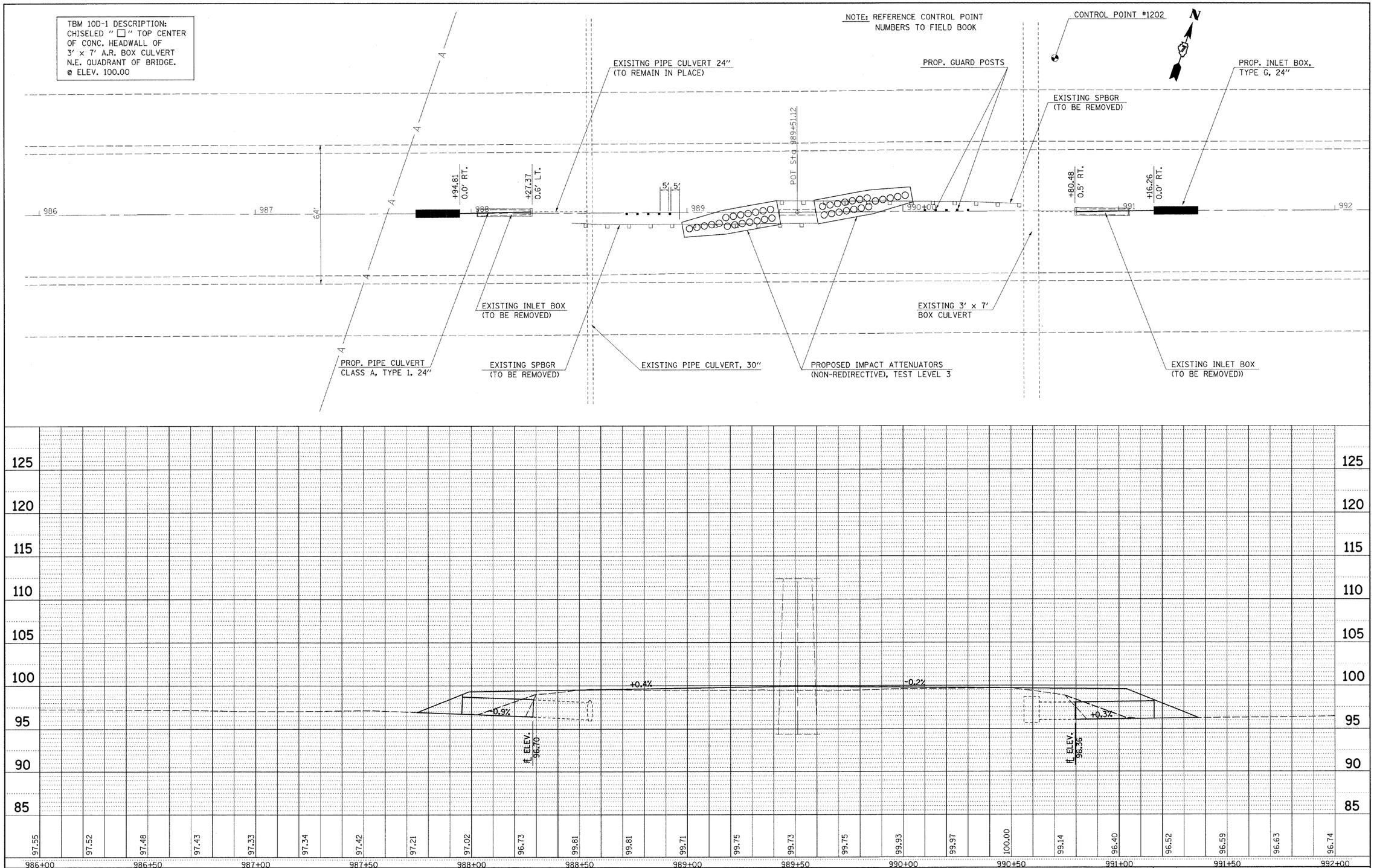

FILE NAME = c:\pw_work\pwidot\swartzrw\dms50728\shtp&p28.74313.dgn	USER NAME = swartzrw	DESIGNED -	REVISED -
	PLOT SCALE = 20.0000 ' / IN.	DRAWN -	REVISED -
	PLOT DATE = 1/20/2009	CHECKED -	REVISED -
		DATE -	REVISED -

STATE OF ILLINOIS
DEPARTMENT OF TRANSPORTATION

PLAN PROFILE 026-0078

SCALE: 20 | SHEET NO. 12 OF 15 SHEETS | STA. 986+00 TO STA. 992+00

F.A.I RTE.	SECTION	COUNTY	TOTAL SHEETS	SHEET NO.
70	D-7 SAFETY 2009-1	FAYETTE	100	26

CONTRACT NO. 74313

FED. ROAD DIST. NO. | ILLINOIS | FED. AID PROJECT

TBM 10C-1 DESCRIPTION:
CHISELED "□" TOP CENTER
OF CONC. HEADWALL OF
36" RCCP, N.E. QUADRANT
OF BRIDGE.
@ ELEV. 100.00

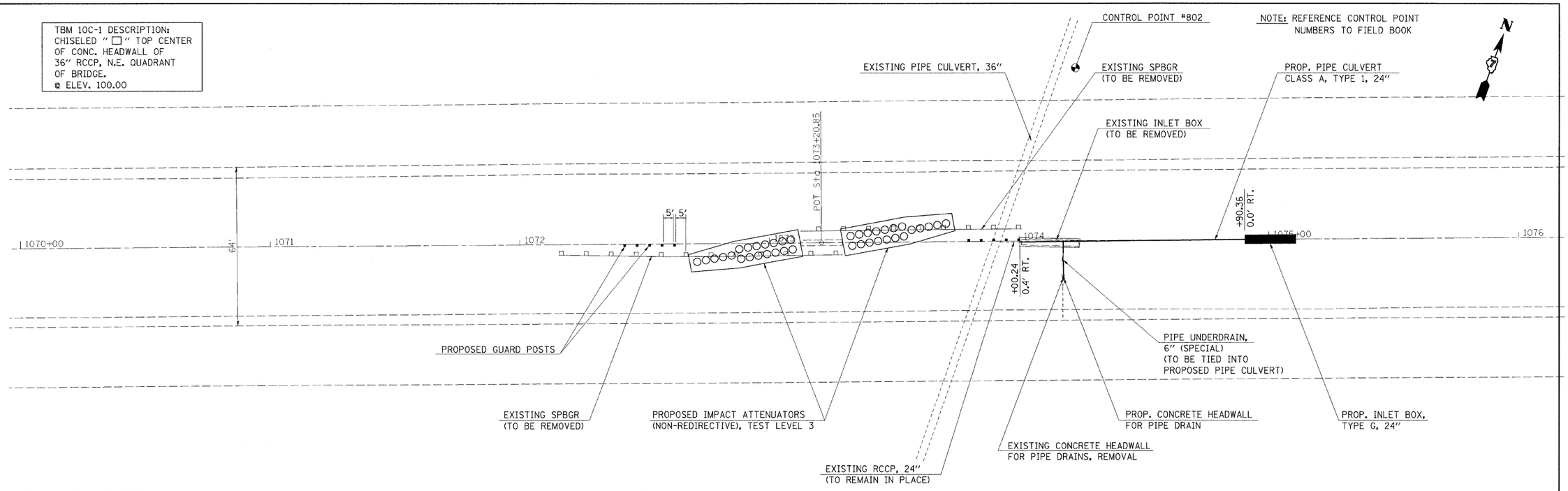

PLAN		BY	DATE
SURVEYED			
PLOTTED			
ALIGNMENT CHECKED			
DGN MASTER CHECKED			
CADD FILE NAME			
NOTE BOOK NO.			

PROFILE		BY	DATE
SURVEYED			
PLOTTED			
GRADES CHECKED			
ALL NOTES CHECKED			
STRUCTURE NOTATNS CHKD			
NOTE BOOK NO.			

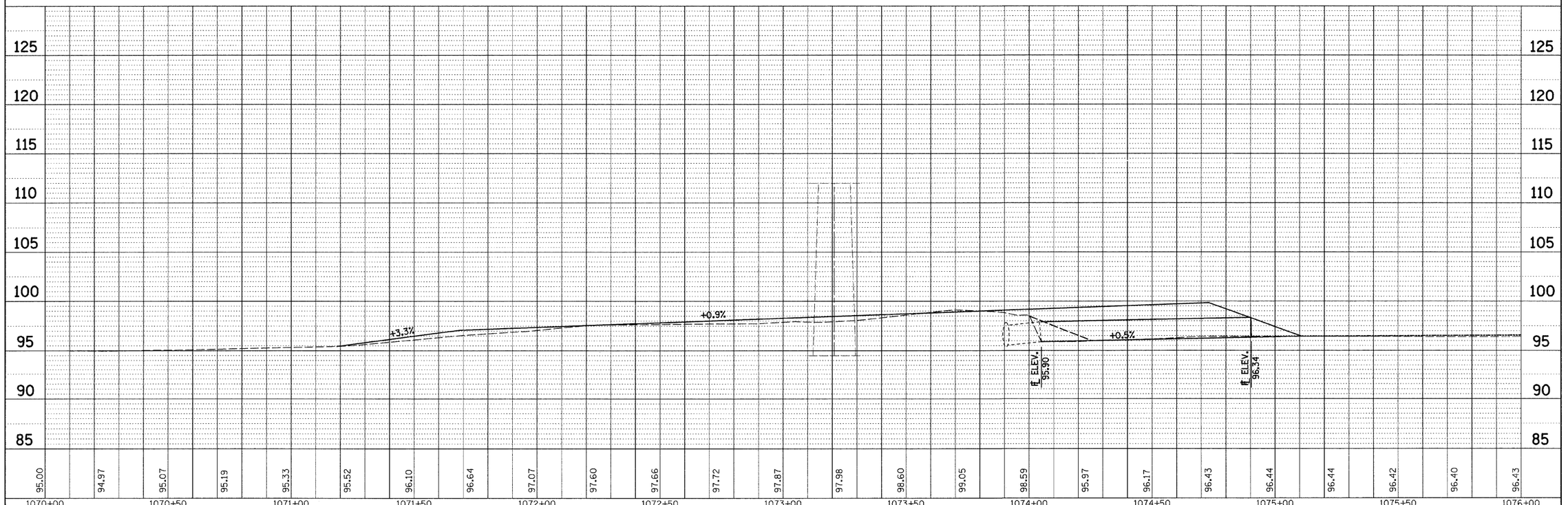

FILE NAME = c:\pw_work\pwidot\swartzrw\dms50728\shtp&&20_74313.dgn	USER NAME = swartzrw	DESIGNED -	REVISED -
	PLOT SCALE = 20.0000 ' / IN.	DRAWN -	REVISED -
	PLOT DATE = 1/20/2009	CHECKED -	REVISED -
		DATE -	REVISED -

STATE OF ILLINOIS
DEPARTMENT OF TRANSPORTATION

PLAN PROFILE 026-0079

SCALE: 20 | SHEET NO. 13 OF 15 SHEETS | STA. 1070+00 TO STA. 1076+00

F.A.I RTE.	SECTION	COUNTY	TOTAL SHEETS	SHEET NO.
70	D-7 SAFETY 2009-1	FAYETTE	100	27

CONTRACT NO. 74313

FED. ROAD DIST. NO. | ILLINOIS | FED. AID PROJECT

TBM 10A-1 DESCRIPTION:
CHISELED " □ " TOP CENTER
OF CONC. HEADWALL OF
RCCP UNDER SLOPEWALL
ON N.W. QUADRANT OF BRIDGE.
@ ELEV. 100.00

NOTE: REFERENCE CONTROL POINT NUMBERS TO FIELD BOOK

CONTROL POINT #3

EXISTING SPBGR (TO BE REMOVED)

N

POT Sta 1242+70.25

5' 5'

64'

1240+00 | 1241 | 1242 | 1243 | 1244 | 1245+00 | 1246

PROPOSED GUARD POSTS

EXISTING SPBGR (TO BE REMOVED)

PROPOSED IMPACT ATTENUATORS (NON-REDIRECTIVE), TEST LEVEL 3

PLAN		BY	DATE
NOTE BOOK NO.	SURVEYED		
	PLOTTED		
	ALIGNMENT CHECKED		
	RT. OF WAY CHECKED		
	CADD FILE NAME		

PROFILE		BY	DATE
NOTE BOOK NO.	SURVEYED		
	PLOTTED		
	GRADES CHECKED		
	ALIGNMENT CHECKED		
	STRUCTURE NOTATNS CHKD		

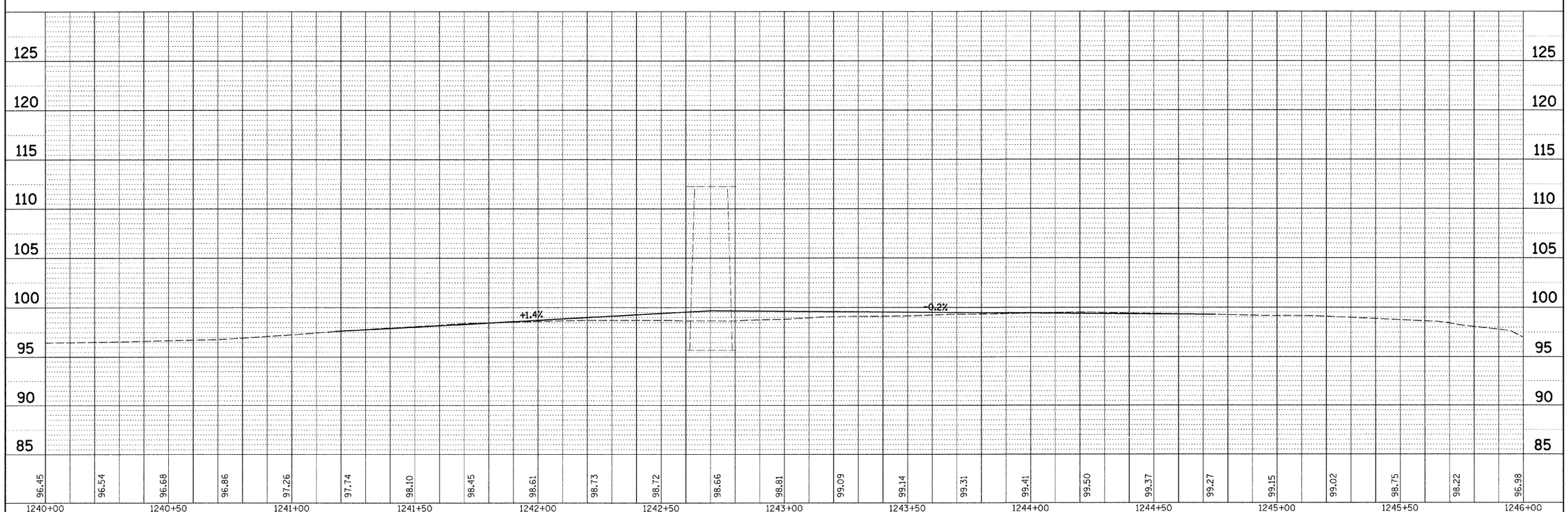

FILE NAME = c:\pw_work\pwidot\swartzrw\dms50728\shtp&p20_74313.dgn	USER NAME = swartzrw	DESIGNED -	REVISED -
		DRAWN -	REVISED -
	PLOT SCALE = 20.0000 ' / IN.	CHECKED -	REVISED -
	PLOT DATE = 1/20/2009	DATE -	REVISED -

STATE OF ILLINOIS
DEPARTMENT OF TRANSPORTATION

PLAN PROFILE 026-0080

SCALE: 20 | SHEET NO. 14 OF 15 SHEETS | STA. 1240+00 | TO STA. 1246+00

F.A.I RTE.	SECTION	COUNTY	TOTAL SHEETS	SHEET NO.
70	D-7 SAFETY 2009-1	FAYETTE	100	28
		CONTRACT NO. 74313		

FED. ROAD DIST. NO. | ILLINOIS | FED. AID PROJECT

TBM 10J-1 DESCRIPTION:
CHISELED "□" ON SOUTH SIDE OF CONCRETE PIER (NEAR CENTER) OF BRIDGE #26-0087 ON I-70
ELEV. 592.07

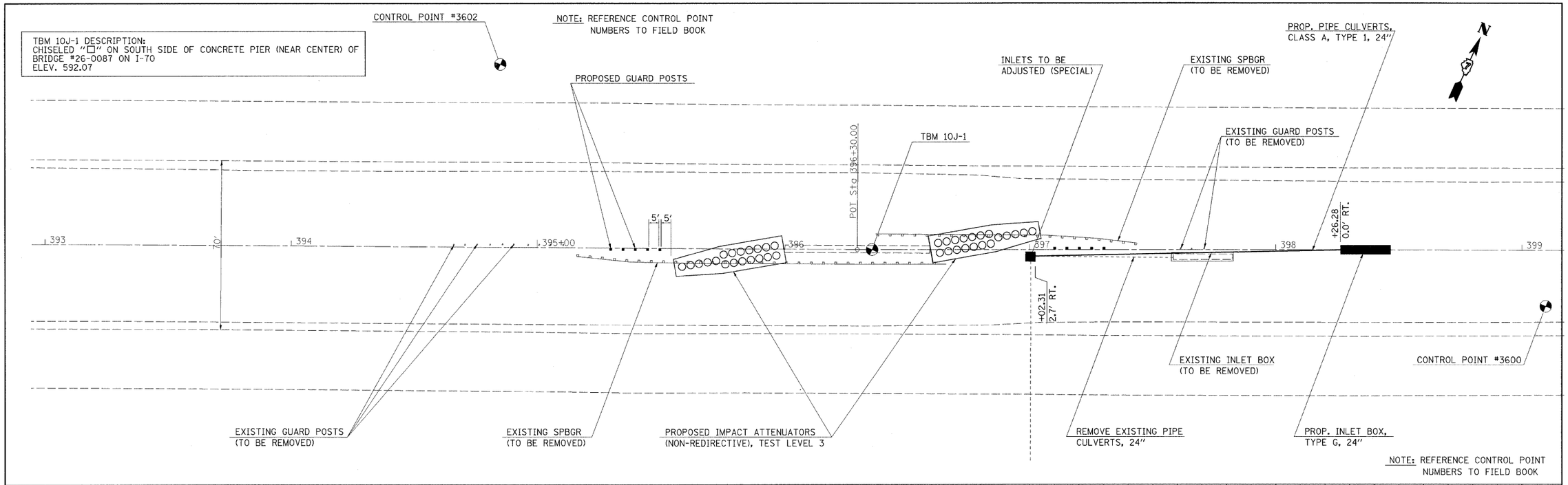

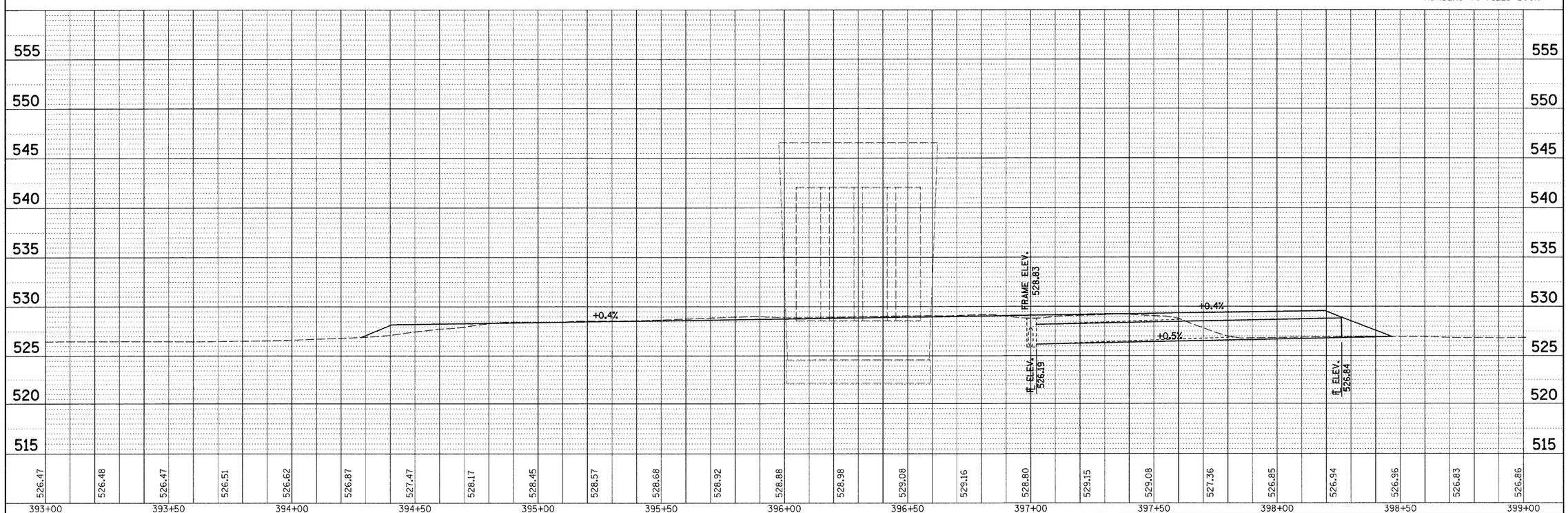

PLAN — SURVEYED / PLOTTED / ALIGNMENT CHECKED / RL & WPED / CADD FILE NAME — NOTE BOOK NO. — BY — DATE

PROFILE — SURVEYED / PLOTTED / GRADES CHECKED / RL & WPED / STRUCTURE NOTATNS CHKD — NOTE BOOK NO. — BY — DATE

FILE NAME = c:\pw_work\pwidot\swartzrw\dms50728\shtp&p20_74313.dgn	USER NAME = swartzrw	DESIGNED -	REVISED -
		DRAWN -	REVISED -
	PLOT SCALE = 20.0000 ' / IN.	CHECKED -	REVISED -
	PLOT DATE = 1/20/2009	DATE -	REVISED -

STATE OF ILLINOIS
DEPARTMENT OF TRANSPORTATION

PLAN PROFILE 026-0087

SCALE: 20 | SHEET NO. 15 OF 15 SHEETS | STA. 393+00 TO STA. 399+00

F.A.I RTE.	SECTION	COUNTY	TOTAL SHEETS	SHEET NO.
70	D-7 SAFETY 2009-1	FAYETTE	100	29
		CONTRACT NO. 74313		

FED. ROAD DIST. NO. | ILLINOIS | FED. AID PROJECT

DETAIL OF CRASHWALL EXTENSION

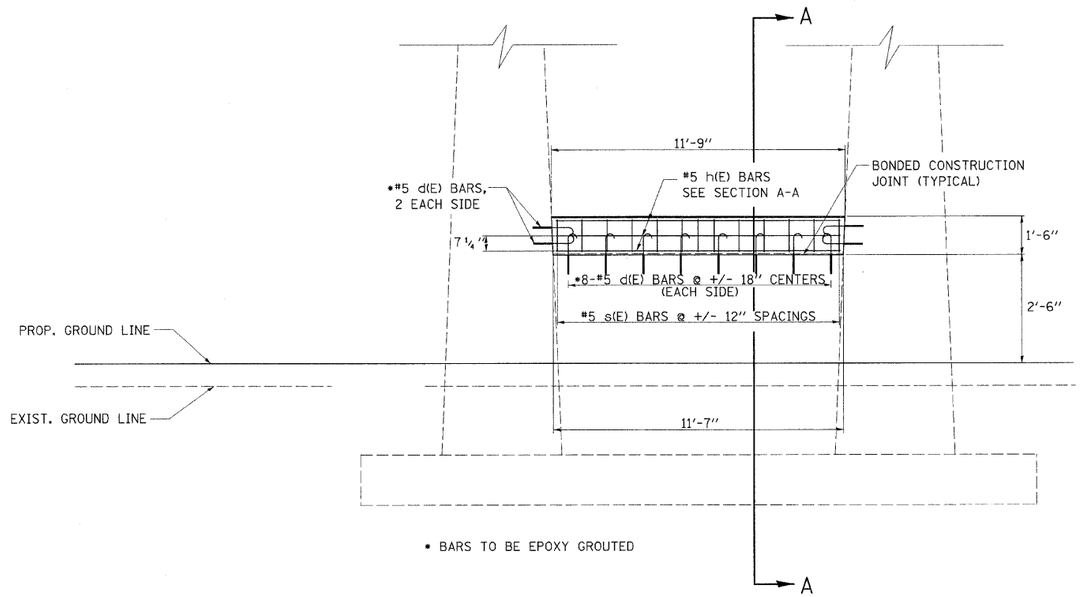

• BARS TO BE EPOXY GROUTED

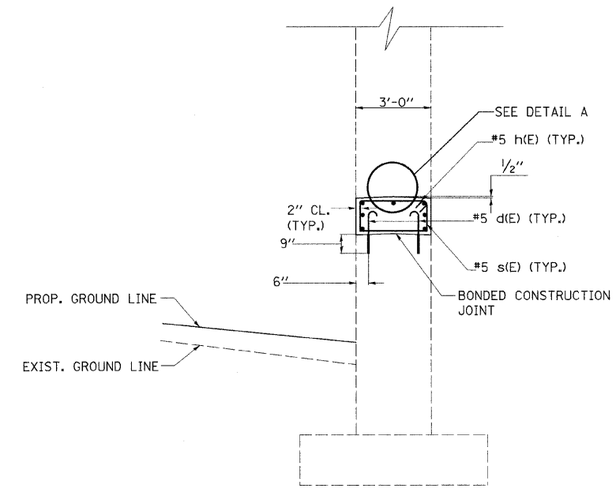

SECTION A-A

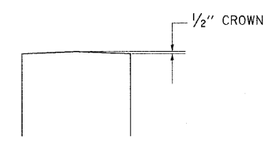

DETAIL A

BILL OF MATERIALS

ITEM	UNIT	QUANTITY
CONCRETE STRUCTURES	CU.YD.	1.9
REINFORCEMENT BARS, EPOXY COATED	LB.	240

BAR TABLE

BAR	QTY.	SIZE	LENGTH	SHAPE
d(E)	24	#5	2'-1"	
s(E)	12	#5	8'-8"	
h(E)	7	#5	11'-4 1/4"	

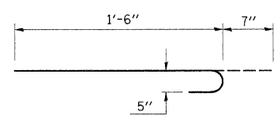

BAR d(E)

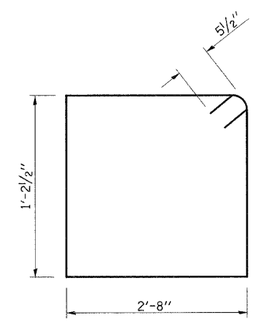

BAR s(E)

GENERAL NOTES

EPOXY GROUTING SHALL BE DONE IN ACCORDANCE WITH ARTICLE 584 OF THE STANDARD SPECIFICATIONS. THE DRILLED HOLES FOR THE d(E) BARS SHALL BE 1/4" LARGER THAN THE DIAMETER OF THE BAR. THE COST OF THE EPOXY GROUTING AND DRILLING SHALL BE INCLUDED IN THE COST OF REINFORCEMENT BARS, EPOXY COATED.

REINFORCEMENT BARS SHALL CONFORM TO THE REQUIREMENTS OF ASTM A 706 Gr 60 SEE SPECIAL PROVISIONS

PLAN DIMENSIONS AND DETAILS RELATIVE TO THE EXISTING STRUCTURE HAVE BEEN TAKEN FROM EXISTING PLANS AND ARE SUBJECT TO NOMINAL CONSTRUCTION VARIATIONS. IT SHALL BE THE CONTRACTOR'S RESPONSIBILITY TO VERIFY SUCH DIMENSIONS AND DETAILS IN THE FIELD AND MAKE NECESSARY APPROVED ADJUSTMENTS PRIOR TO CONSTRUCTION OR ORDERING OF MATERIALS. SUCH VARIATIONS SHALL NOT BE CAUSE FOR ADDITIONAL COMPENSATION FOR A CHANGE IN THE SCOPE OF THE WORK. HOWEVER, THE CONTRACTOR WILL BE PAID FOR THE QUANTITY ACTUALLY FURNISHED AT THE UNIT PRICE FOR THE WORK.

REINFORCEMENT BARS LABELED (E) ARE EPOXY COATED BARS

DETAIL OF CRASHWALL EXTENSION

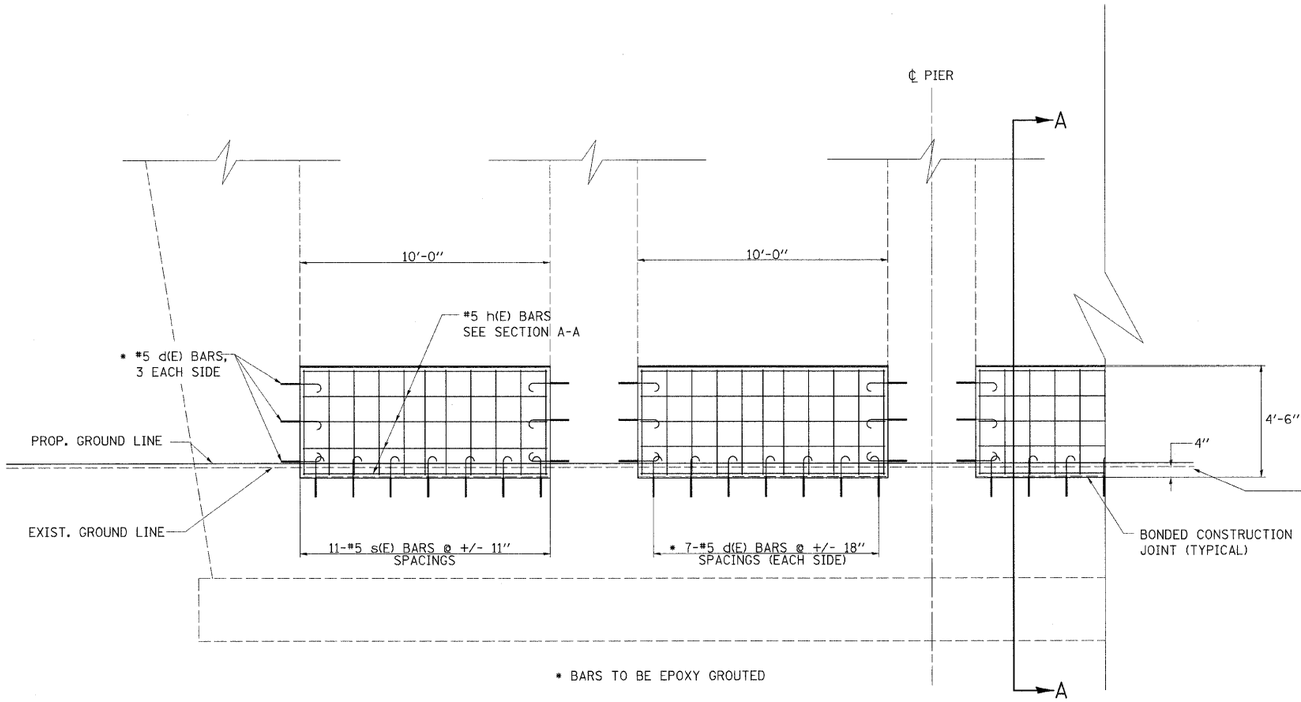

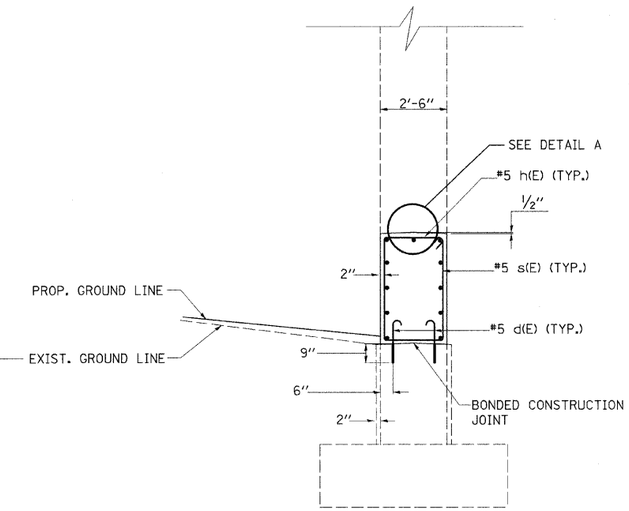

SECTION A-A

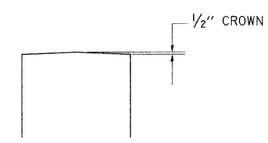

DETAIL A

BAR TABLE

BAR	QTY.	SIZE	LENGTH	SHAPE
d(E)	104	#5	2'-1"	
s(E)	44	#5	13'-7"	
h(E)	44	#5	9'-9"	

BILL OF MATERIALS

ITEM	UNIT	QUANTITY
CONCRETE STRUCTURES	CU.YD.	16.7
REINFORCEMENT BARS, EPOXY COATED	LB.	1300

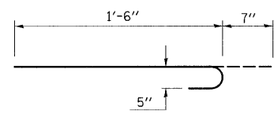

BAR d(E)

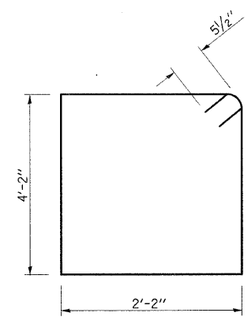

BAR s(E)

GENERAL NOTES

EPOXY GROUTING SHALL BE DONE IN ACCORDANCE WITH ARTICLE 584 OF THE STANDARD SPECIFICATIONS. THE DRILLED HOLES FOR THE d(E) BARS SHALL BE 1/4" LARGER THAN THE DIAMETER OF THE BAR. THE COST OF THE EPOXY GROUTING AND DRILLING SHALL BE INCLUDED IN THE COST OF REINFORCEMENT BARS, EPOXY COATED.

REINFORCEMENT BARS SHALL CONFORM TO THE REQUIREMENTS OF ASTM A 706 Gr 60, SEE SPECIAL PROVISIONS

PLAN DIMENSIONS AND DETAILS RELATIVE TO THE EXISTING STRUCTURE HAVE BEEN TAKEN FROM EXISTING PLANS AND ARE SUBJECT TO NOMINAL CONSTRUCTION VARIATIONS. IT SHALL BE THE CONTRACTOR'S RESPONSIBILITY TO VERIFY SUCH DIMENSIONS AND DETAILS IN THE FIELD AND MAKE NECESSARY APPROVED ADJUSTMENTS PRIOR TO CONSTRUCTION OR ORDERING OF MATERIALS. SUCH VARIATIONS SHALL NOT BE CAUSE FOR ADDITIONAL COMPENSATION FOR A CHANGE IN THE SCOPE OF THE WORK. HOWEVER, THE CONTRACTOR WILL BE PAID FOR THE QUANTITY ACTUALLY FURNISHED AT THE UNIT PRICE FOR THE WORK.

REINFORCEMENT BARS LABELED (E) ARE EPOXY COATED BARS

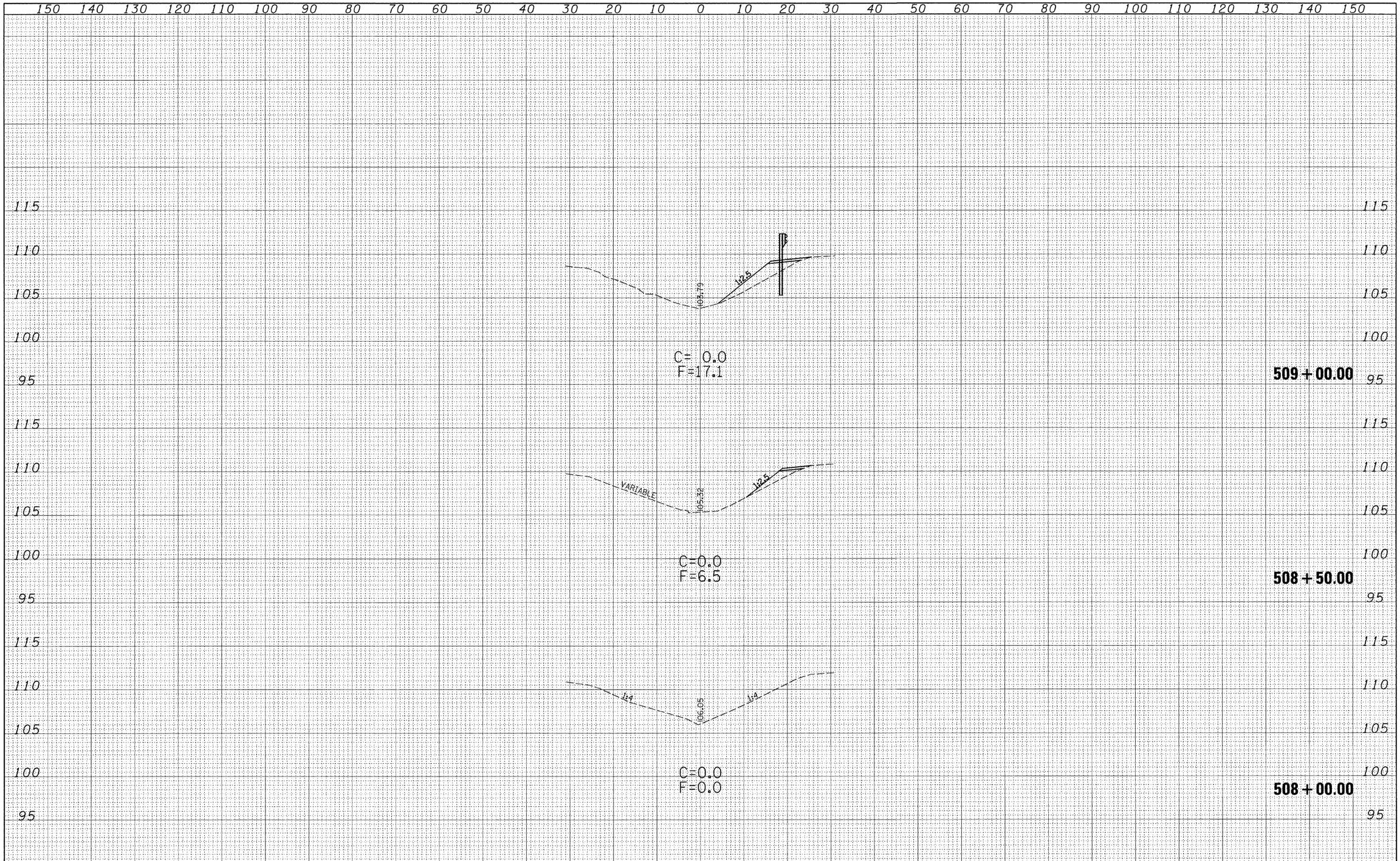

FINAL SURVEY		BY	DATE
NOTE BOOK	SURVEYED		
	PLOTTED		
	TEMPLATE		
	AREAS		
NO.	AREAS CHECKED		

ORIGINAL SURVEY		BY	DATE
NOTE BOOK	SURVEYED		
	PLOTTED		
	TEMPLATE		
	AREAS		
NO.	AREAS CHECKED		

FILE NAME = c:\pw_work\PWIDOT\DAVISONJL\dms36538\xs0032sheet_74313.dgn	USER NAME = davisonjl	DESIGNED - JLD	REVISED -
		DRAWN - JLD	REVISED -
	PLOT SCALE = 10.0000 ' / IN.	CHECKED -	REVISED -
	PLOT DATE = 1/20/2009	DATE -	REVISED -

STATE OF ILLINOIS
DEPARTMENT OF TRANSPORTATION

CROSS SECTIONS
S.N. 026-0032

SCALE: 10:5 | SHEET NO. 1 OF 6 SHEETS | STA. 508+00.00 TO STA. 509+00.00

F.A.I. RTE.	SECTION	COUNTY	TOTAL SHEETS	SHEET NO.
70	D7 SAFETY 2009-1	FAYETTE	100	32
		CONTRACT NO. 74313		

FED. ROAD DIST. NO. | ILLINOIS | FED. AID PROJECT

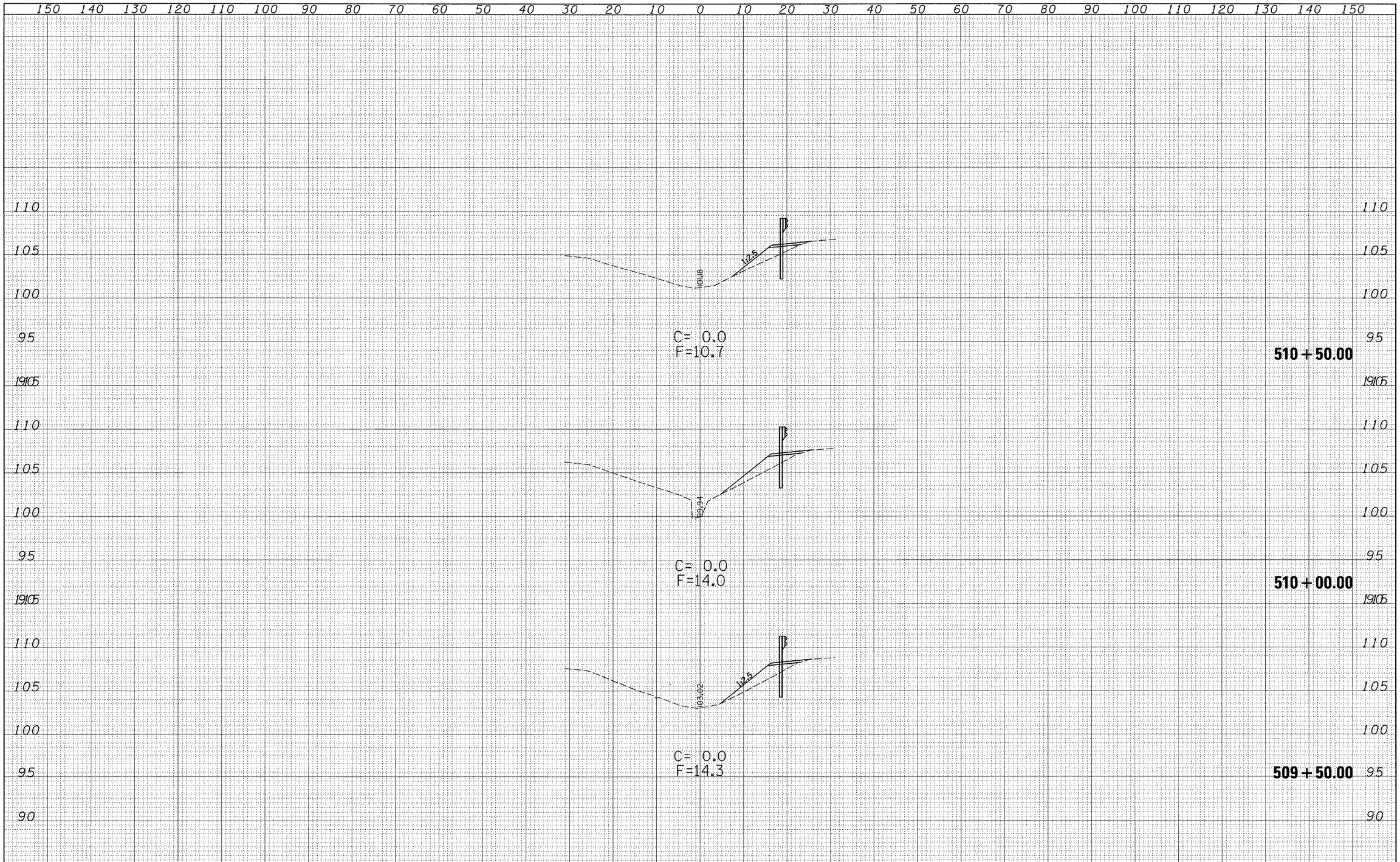

FINAL SURVEY	BY	DATE
SURVEYED		
PLOTTED		
TRAVERSE		
NOTE BOOK	AREAS	
NO.	AREAS CHECKED	

ORIGINAL SURVEY	BY	DATE
SURVEYED		
PLOTTED		
TRAVERSE		
NOTE BOOK	AREAS	
NO.	AREAS CHECKED	

FILE NAME = c:\pw_work\PWIDOT\DAVISONJL\dms36538\xs0032sheet_74313.dgn	USER NAME = davisonjl	DESIGNED - JLD	REVISED -	STATE OF ILLINOIS DEPARTMENT OF TRANSPORTATION
		DRAWN - JLD	REVISED -	
	PLOT SCALE = 10.0000 ' / IN.	CHECKED -	REVISED -	
	PLOT DATE = 1/20/2009	DATE -	REVISED -	

CROSS SECTIONS
S.N. 026-0032

SCALE: 10:5 | SHEET NO. 2 OF 6 SHEETS | STA. 509+50.00 TO STA. 510+50.00

F.A.I. RTE.	SECTION	COUNTY	TOTAL SHEETS	SHEET NO.
70	D7 SAFETY 2009-1	FAYETTE	100	33

CONTRACT NO. 74313

FED. ROAD DIST. NO. | ILLINOIS | FED. AID PROJECT

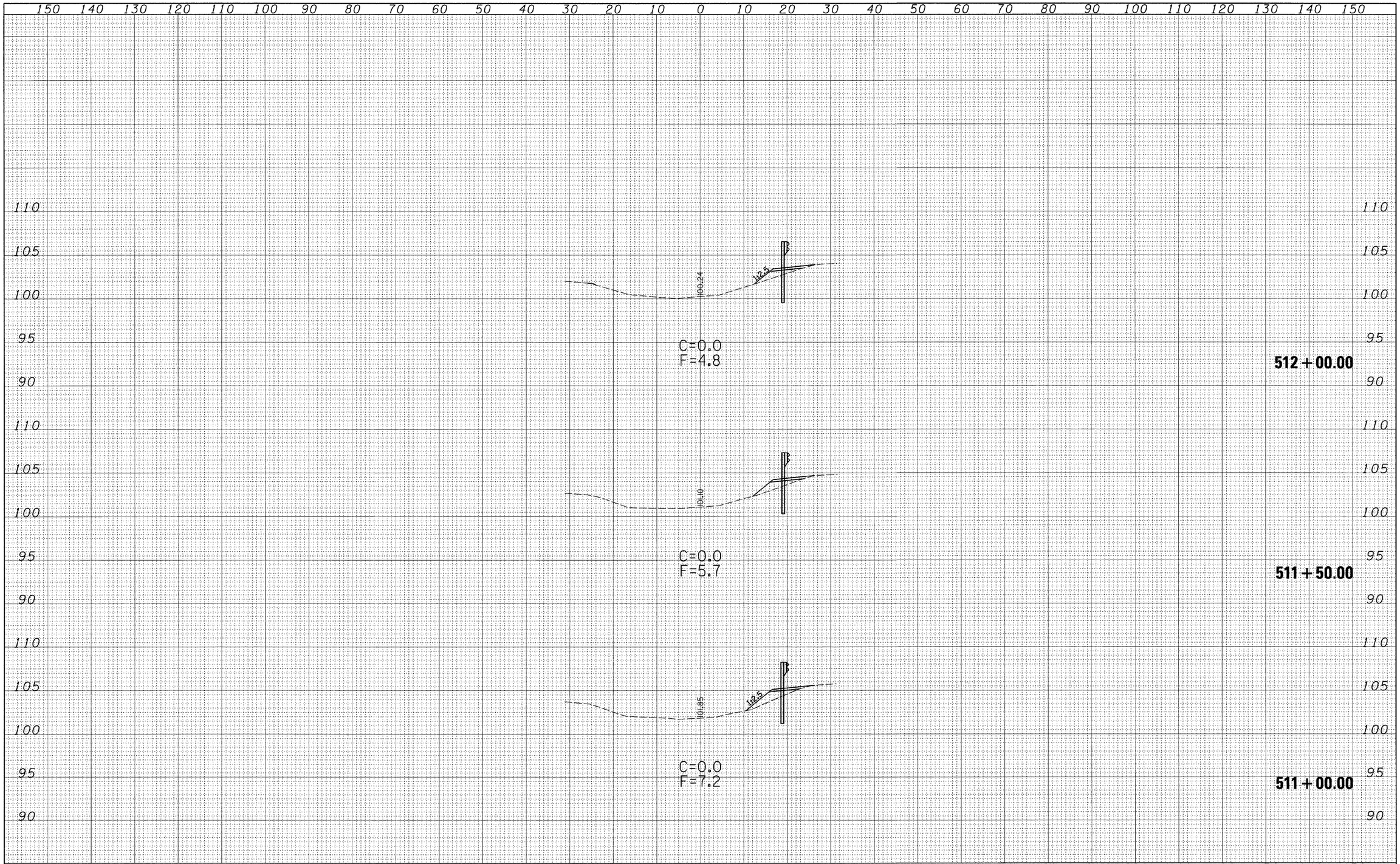

FINAL SURVEY		BY	DATE
NOTE BOOK NO.	SURVEYED		
	PLOTTED		
	TEMPLATE		
	AREAS		
	AREAS CHECKED		

ORIGINAL SURVEY		BY	DATE
NOTE BOOK NO.	SURVEYED		
	PLOTTED		
	TEMPLATE		
	AREAS		
	AREAS CHECKED		

FILE NAME = c:\pw_work\PWIDOT\DAVISONJL\dms36538\xs0032sheet_74313.dgn	USER NAME = davisonjl	DESIGNED - JLD	REVISED -
		DRAWN - JLD	REVISED -
	PLOT SCALE = 10.0000 ' / IN.	CHECKED -	REVISED -
	PLOT DATE = 1/20/2009	DATE -	REVISED -

STATE OF ILLINOIS
DEPARTMENT OF TRANSPORTATION

CROSS SECTIONS
S.N. 026-0032

SCALE: 10:5 | SHEET NO. 3 OF 6 SHEETS | STA. 511+00.00 TO STA. 512+00.00

F.A.I. RTE.	SECTION	COUNTY	TOTAL SHEETS	SHEET NO.
70	D7 SAFETY 2009-1	FAYETTE	100	34
		CONTRACT NO. 74313		

FED. ROAD DIST. NO. | ILLINOIS | FED. AID PROJECT

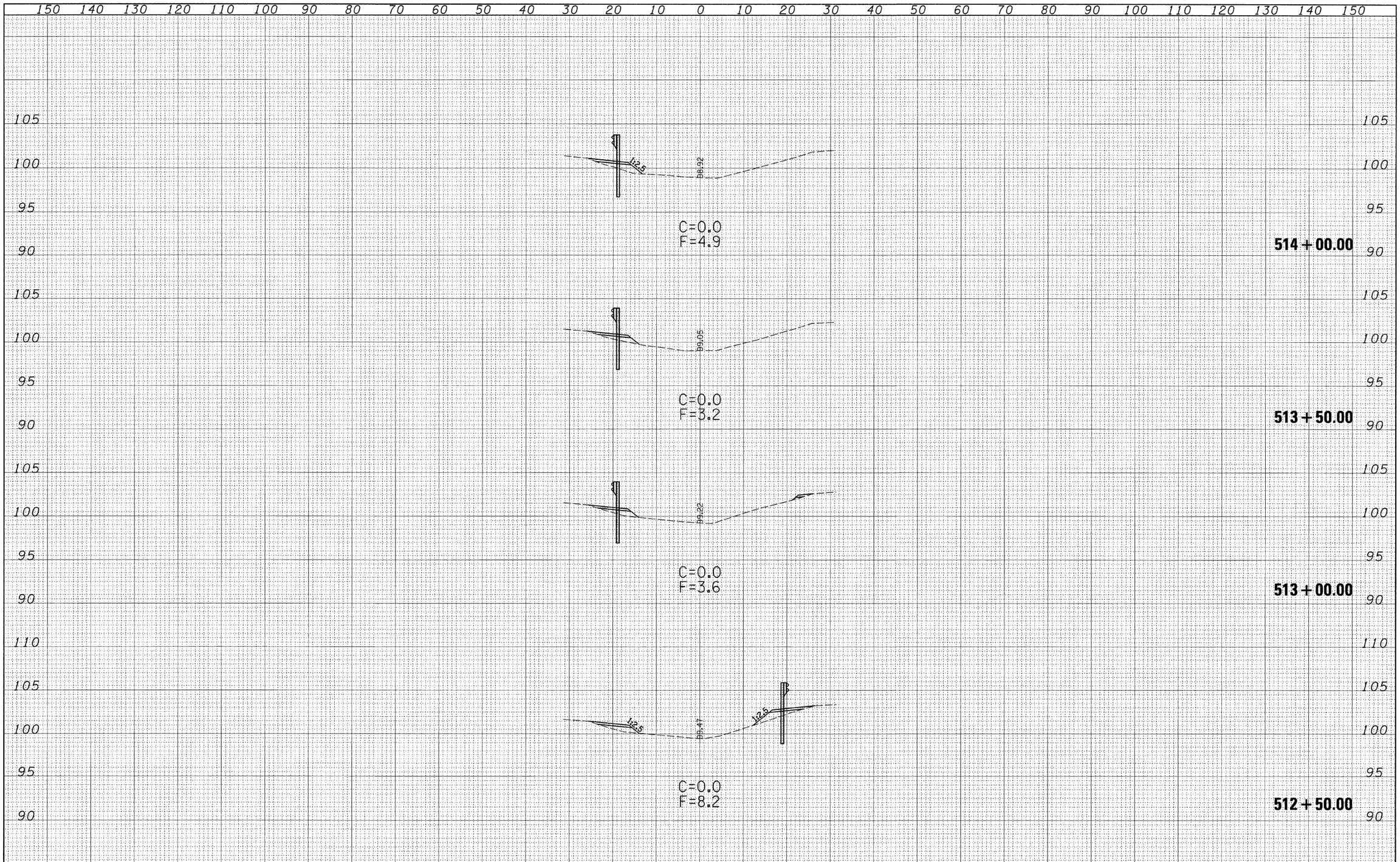

FINAL SURVEY	BY	DATE
SURVEYED		
PLOTTED		
TEMPLATE		
AREAS		
AREAS CHECKED		

NOTE BOOK NO.

ORIGINAL SURVEY	BY	DATE
SURVEYED		
PLOTTED		
TEMPLATE		
AREAS		
AREAS CHECKED		

NOTE BOOK NO.

FILE NAME = c:\pw_work\PWIDOT\DAVISONJL\dms36538\rs0032sheet_74313.dgn	USER NAME = davisonjl	DESIGNED - JLD	REVISED -
		DRAWN - JLD	REVISED -
	PLOT SCALE = 10.0000 ' / IN.	CHECKED -	REVISED -
	PLOT DATE = 1/20/2009	DATE -	REVISED -

STATE OF ILLINOIS
DEPARTMENT OF TRANSPORTATION

CROSS SECTIONS
S.N. 026-0032

SCALE: 10:5 | SHEET NO. 4 OF 6 SHEETS | STA. 512+50.00 TO STA. 514+00.00

F.A.I. RTE.	SECTION	COUNTY	TOTAL SHEETS	SHEET NO.
70	D7 SAFETY 2009-1	FAYETTE	100	35
		CONTRACT NO. 74313		

FED. ROAD DIST. NO. | ILLINOIS | FED. AID PROJECT

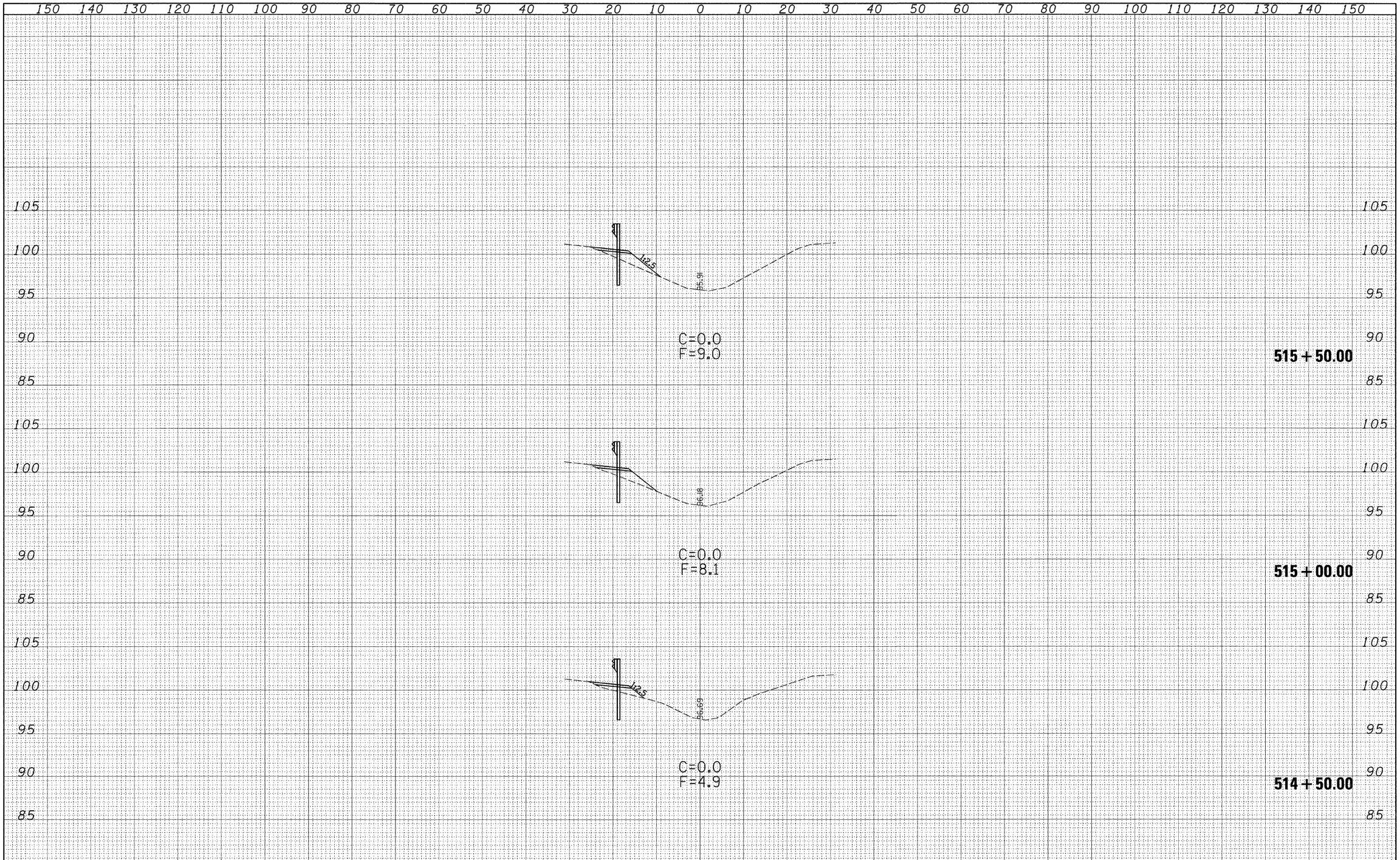

FINAL SURVEY	BY	DATE
SURVEYED		
PLOTTED		
TOPO VERIFIED		
DRAWN BY		
AREAS		
AREAS CHECKED		
NOTE BOOK NO.		

ORIGINAL SURVEY	BY	DATE
SURVEYED		
PLOTTED		
TOPO VERIFIED		
DRAWN BY		
AREAS		
AREAS CHECKED		
NOTE BOOK NO.		

FILE NAME = c:\pw_work\PWIDOT\DAVISONJL\dms36538\xs0032sheet_74313.dgn

USER NAME = davisonjl
PLOT SCALE = 10.0000 ' / IN.
PLOT DATE = 1/20/2009

DESIGNED - JLD
DRAWN - JLD
CHECKED -
DATE -

REVISED -
REVISED -
REVISED -
REVISED -

STATE OF ILLINOIS
DEPARTMENT OF TRANSPORTATION

CROSS SECTIONS
S.N. 026-0032

SCALE: 10:5 | SHEET NO. 5 OF 6 SHEETS | STA. 514+50.00 TO STA. 515+50.00

F.A.I. RTE.	SECTION	COUNTY	TOTAL SHEETS	SHEET NO.
70	D7 SAFETY 2009-1	FAYETTE	100	36

CONTRACT NO. 74313

FED. ROAD DIST. NO. | ILLINOIS | FED. AID PROJECT

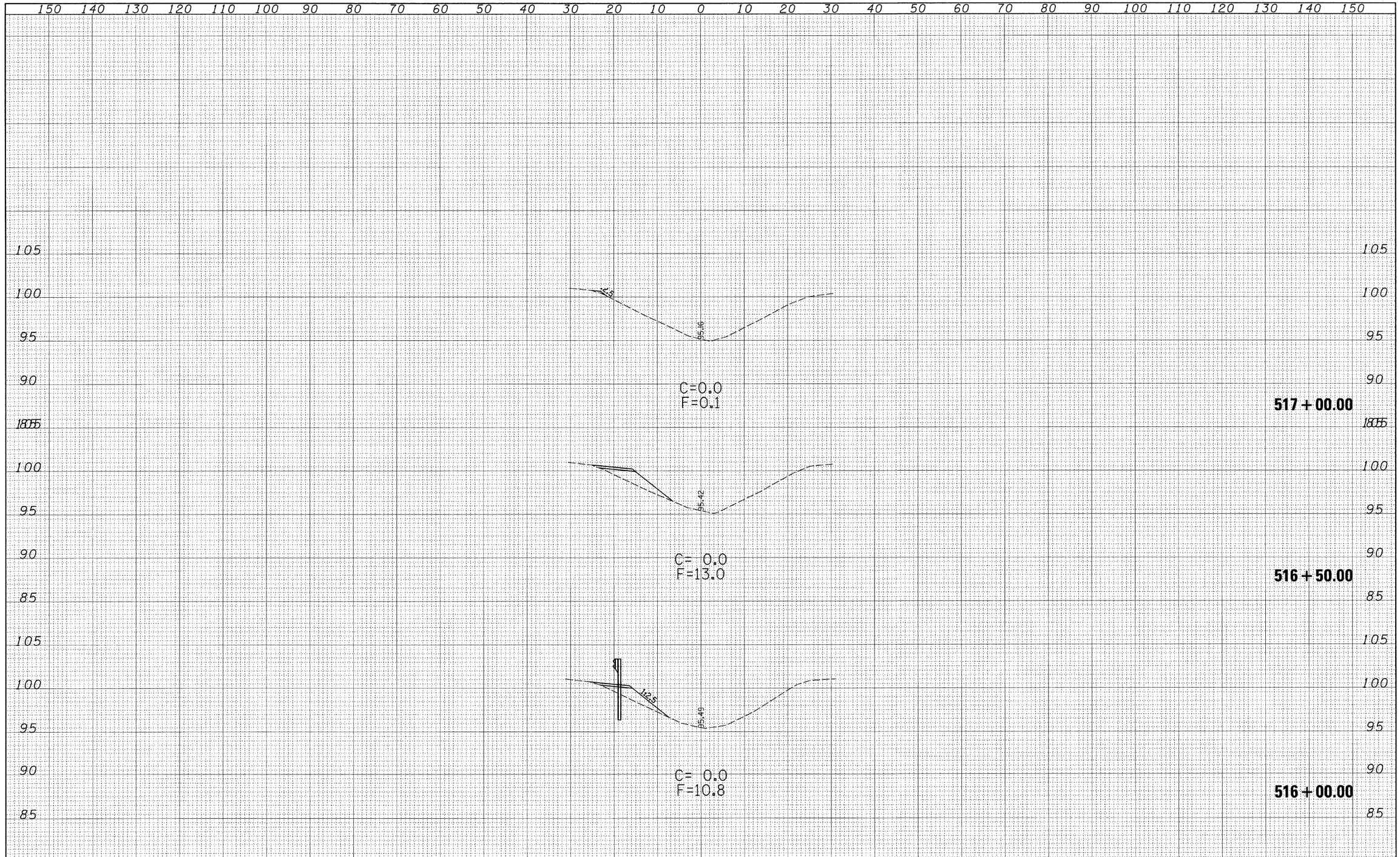

FINAL SURVEY		BY	DATE
NOTE BOOK NO.	SURVEYED		
	PLOTTED		
	TEMPLATE		
	AREAS		
	AREAS CHECKED		

ORIGINAL SURVEY		BY	DATE
NOTE BOOK NO.	SURVEYED		
	PLOTTED		
	TEMPLATE		
	AREAS		
	AREAS CHECKED		

FILE NAME = c:\pw_work\PWIDOT\DAVISONJL\dms36538\xs0032sheet_74313.dgn	USER NAME = davisonjl	DESIGNED - JLD	REVISED -
		DRAWN - JLD	REVISED -
	PLOT SCALE = 10.0000 ' / IN.	CHECKED -	REVISED -
	PLOT DATE = 1/20/2009	DATE -	REVISED -

STATE OF ILLINOIS
DEPARTMENT OF TRANSPORTATION

CROSS SECTIONS
S.N. 026-0032

SCALE: 10:5 | SHEET NO. 6 OF 6 SHEETS | STA. 516+00.00 TO STA. 517+00.00

F.A.I. RTE.	SECTION	COUNTY	TOTAL SHEETS	SHEET NO.
70	D7 SAFETY 2009-1	FAYETTE	100	37
		CONTRACT NO. 74313		

FED. ROAD DIST. NO. | ILLINOIS | FED. AID PROJECT

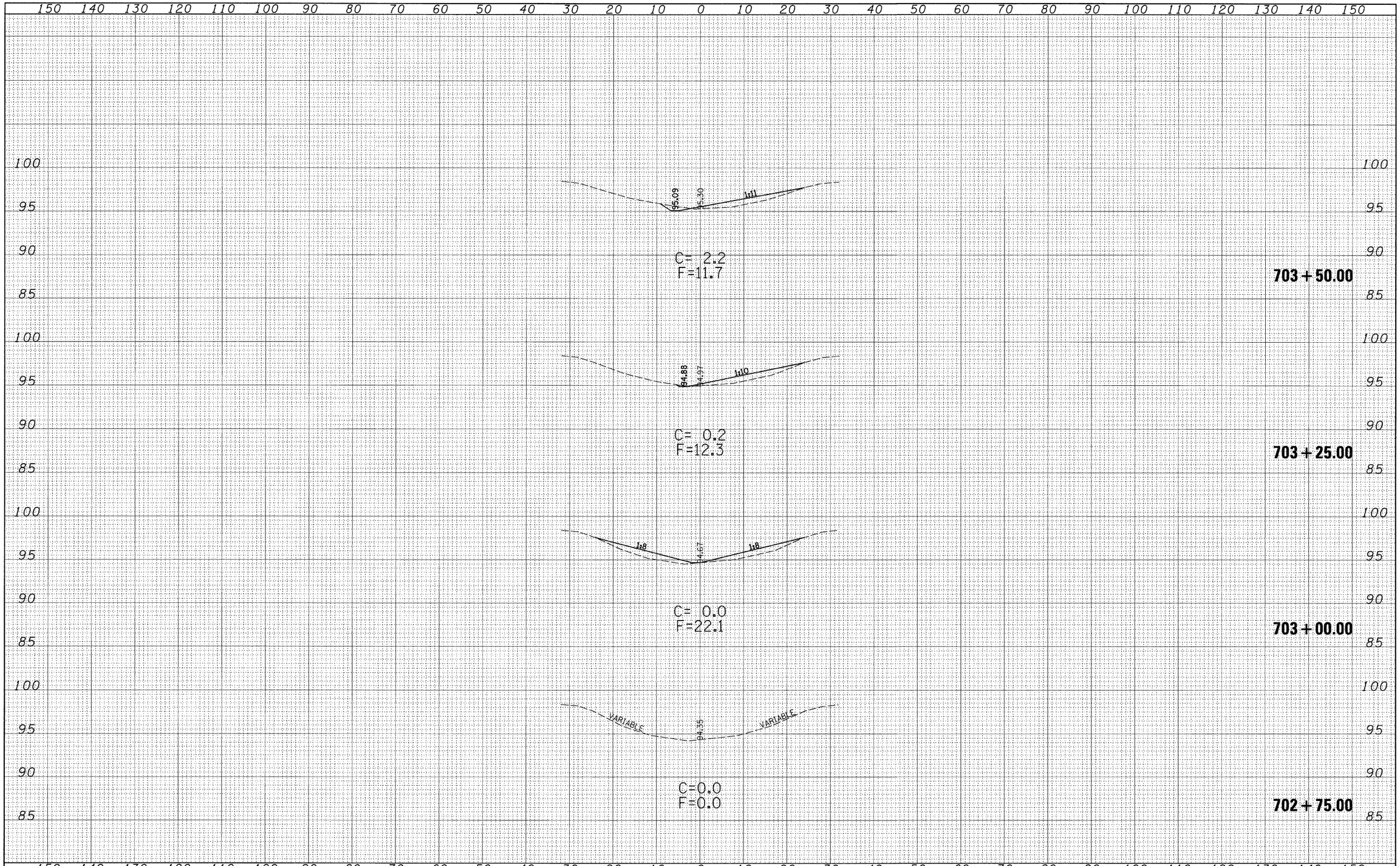

FINAL SURVEY		BY	DATE
NOTE BOOK NO.	SURVEYED		
	PLOTTED		
	TEMPLATE		
	AREAS		
	AREAS CHECKED		

ORIGINAL SURVEY		BY	DATE
NOTE BOOK NO.	SURVEYED		
	PLOTTED		
	TEMPLATE		
	AREAS		
	AREAS CHECKED		

FILE NAME = c:\pw_work\PWIDOT\DAVISONJL\dms36538\xs0049sheet_74313.dgn	USER NAME = davisonjl	DESIGNED - JLD	REVISED -
		DRAWN - JLD	REVISED -
	PLOT SCALE = 10.0000 ' / IN.	CHECKED -	REVISED -
	PLOT DATE = 1/20/2009	DATE -	REVISED -

STATE OF ILLINOIS
DEPARTMENT OF TRANSPORTATION

CROSS SECTIONS
S.N. 026-0049

SCALE: 10:5 | SHEET NO. 1 OF 5 SHEETS | STA. 702+75.00 TO STA. 703+50.00

F.A.I. RTE.	SECTION	COUNTY	TOTAL SHEETS	SHEET NO.
70	D7 SAFETY 2009-1	FAYETTE	100	38
		CONTRACT NO. 74313		

FED. ROAD DIST. NO. | ILLINOIS | FED. AID PROJECT

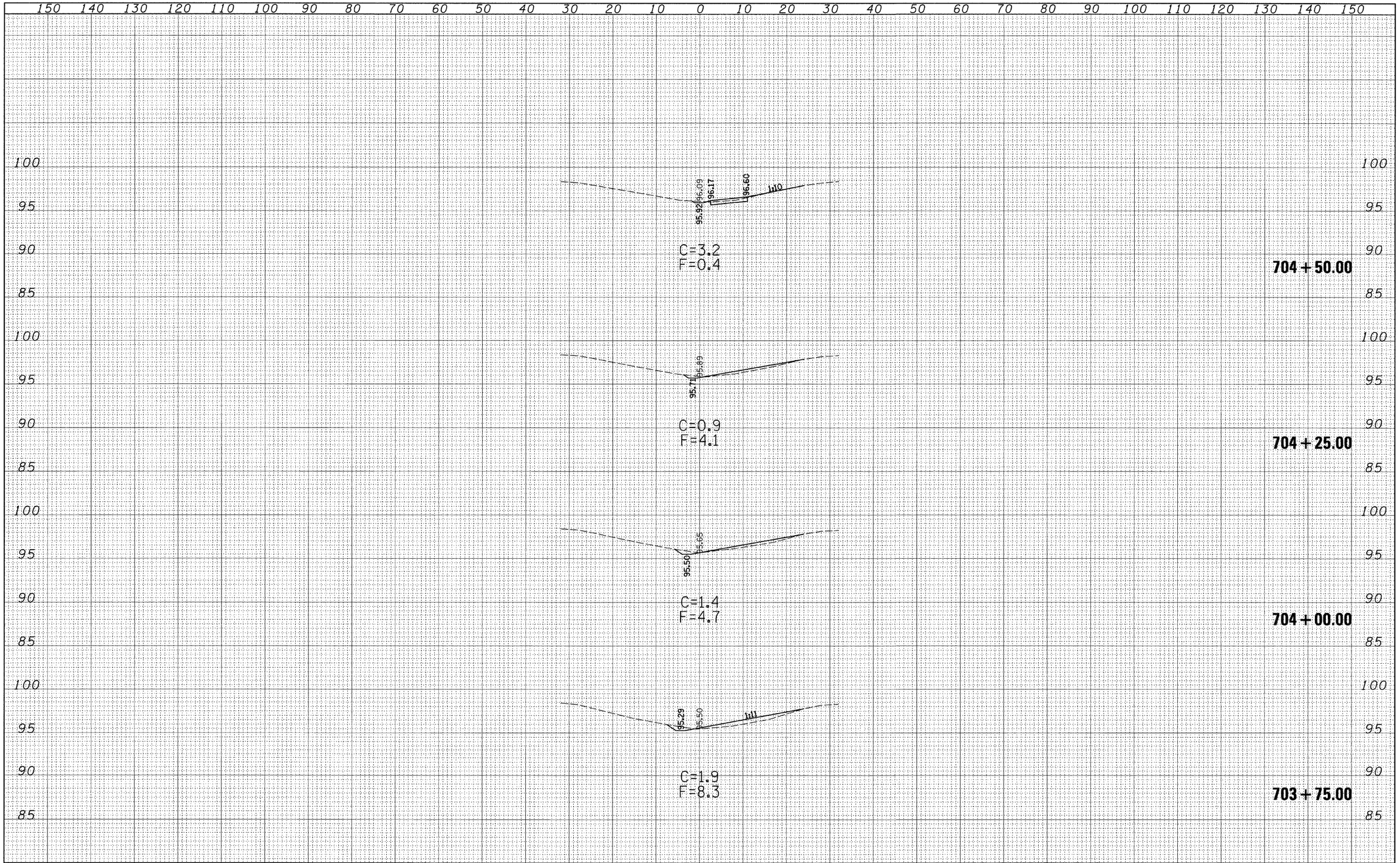

FINAL SURVEY	BY	DATE
SURVEYED		
PLOTTED		
TEMPLATE		
AREAS		
AREAS CHECKED		
NOTE BOOK NO.		

ORIGINAL SURVEY	BY	DATE
SURVEYED		
PLOTTED		
TEMPLATE		
AREAS		
AREAS CHECKED		
NOTE BOOK NO.		

FILE NAME = c:\pw_work\PWIDOT\DAVISONJL\dms36538\xs0049sheet_74313.dgn	USER NAME = davisonjl	DESIGNED - JLD	REVISED -
		DRAWN - JLD	REVISED -
	PLOT SCALE = 10.0000 ' / IN.	CHECKED -	REVISED -
	PLOT DATE = 1/20/2009	DATE -	REVISED -

STATE OF ILLINOIS
DEPARTMENT OF TRANSPORTATION

CROSS SECTIONS
S.N. 026-0049

SCALE: 10:5 | SHEET NO. 2 OF 5 SHEETS | STA. 703+75.00 TO STA. 704+50.00

F.A.I. RTE.	SECTION	COUNTY	TOTAL SHEETS	SHEET NO.
70	D7 SAFETY 2009-1	FAYETTE	100	39
		CONTRACT NO. 74313		

FED. ROAD DIST. NO. | ILLINOIS | FED. AID PROJECT

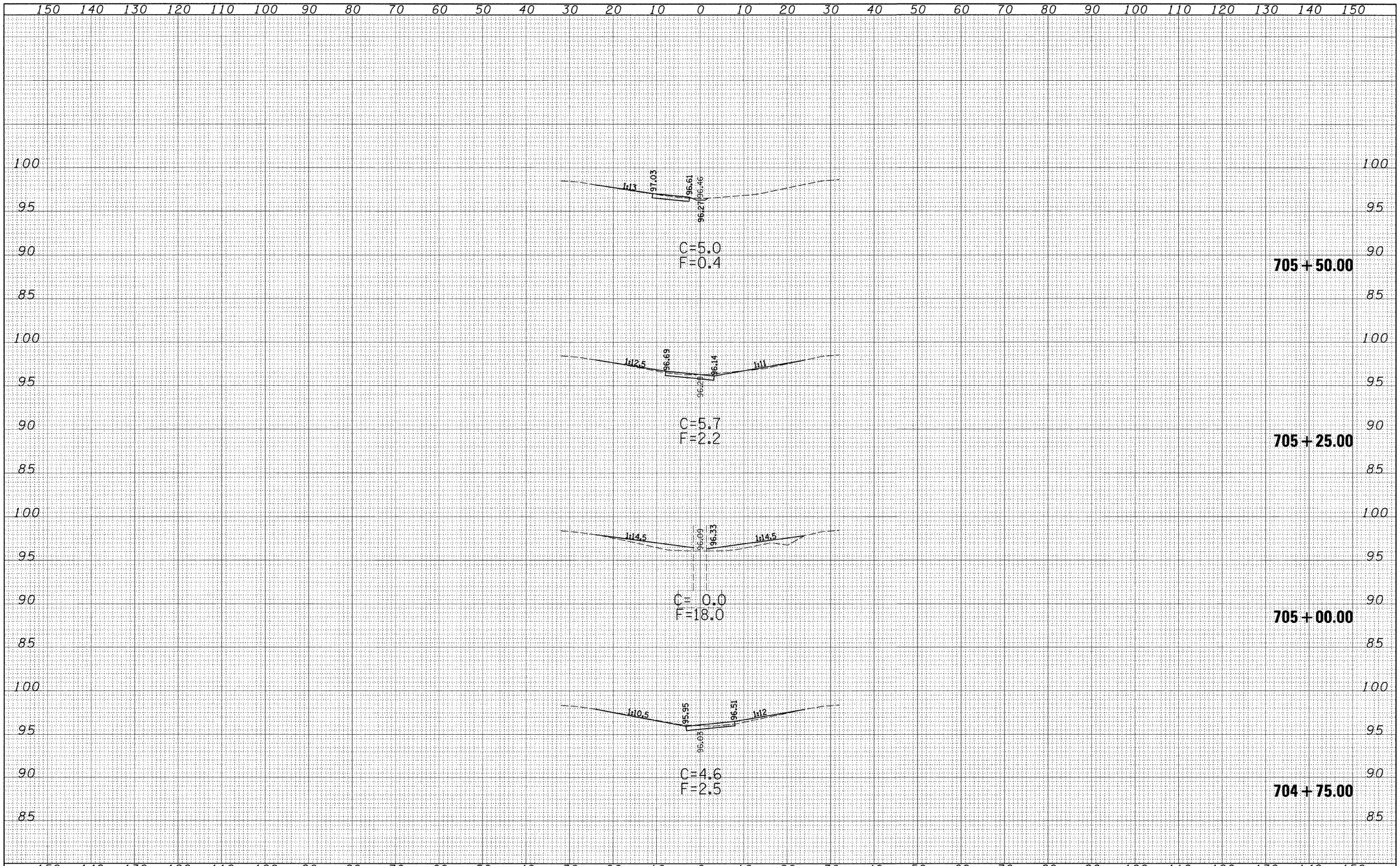

FINAL SURVEY	BY	DATE
SURVEYED		
PLOTTED		
TEMPLATE		
AREAS		
AREAS CHECKED		

NOTE BOOK NO.

ORIGINAL SURVEY	BY	DATE
SURVEYED		
PLOTTED		
TEMPLATE		
AREAS		
AREAS CHECKED		

NOTE BOOK NO.

FILE NAME = c:\pw_work\PWIDOT\DAVISONJL\dms36539\xs0049sheet_74313.dgn	USER NAME = davisonjl	DESIGNED - JLD	REVISED -
		DRAWN - JLD	REVISED -
	PLOT SCALE = 10.0000 ' / IN.	CHECKED -	REVISED -
	PLOT DATE = 1/20/2009	DATE -	REVISED -

STATE OF ILLINOIS
DEPARTMENT OF TRANSPORTATION

CROSS SECTIONS
S.N. 026-0049

SCALE: 10:5 | SHEET NO. 3 OF 5 SHEETS | STA. 704+75.00 TO STA. 705+50.00

F.A.I. RTE.	SECTION	COUNTY	TOTAL SHEETS	SHEET NO.
70	D7 SAFETY 2009-1	FAYETTE	100	40
		CONTRACT NO. 74313		

FED. ROAD DIST. NO. | ILLINOIS | FED. AID PROJECT

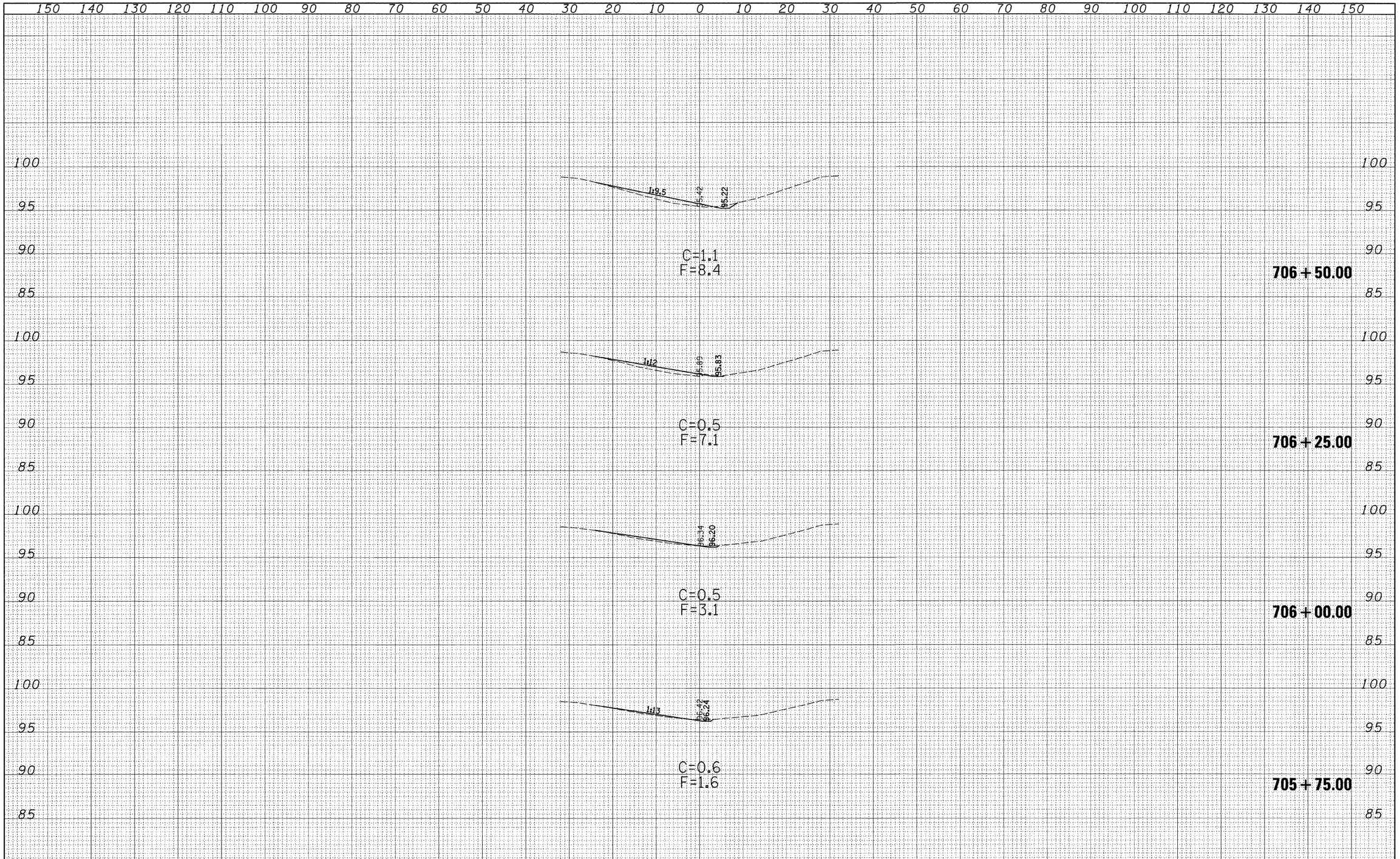

FINAL SURVEY		BY	DATE
NOTE BOOK NO.	SURVEYED		
	PLOTTED		
	TEMPLATE		
	AREAS		
	AREAS CHECKED		

ORIGINAL SURVEY		BY	DATE
NOTE BOOK NO.	SURVEYED		
	PLOTTED		
	TEMPLATE		
	AREAS		
	AREAS CHECKED		

FILE NAME = c:\pw_work\PWIDOT\DAVISONJL\dms36538\xs0049sheet_74313.dgn	USER NAME = davisonjl	DESIGNED - JLD	REVISED -
		DRAWN - JLD	REVISED -
	PLOT SCALE = 10.0000 ' / IN.	CHECKED -	REVISED -
	PLOT DATE = 1/20/2009	DATE -	REVISED -

STATE OF ILLINOIS
DEPARTMENT OF TRANSPORTATION

CROSS SECTIONS
S.N. 026-0049

SCALE: 10:5 | SHEET NO. 4 OF 5 SHEETS | STA. 705+75.00 TO STA. 706+50.00

F.A.I. RTE.	SECTION	COUNTY	TOTAL SHEETS	SHEET NO.
70	D7 SAFETY 2009-1	FAYETTE	100	41
		CONTRACT NO. 74313		
FED. ROAD DIST. NO.	ILLINOIS	FED. AID PROJECT		

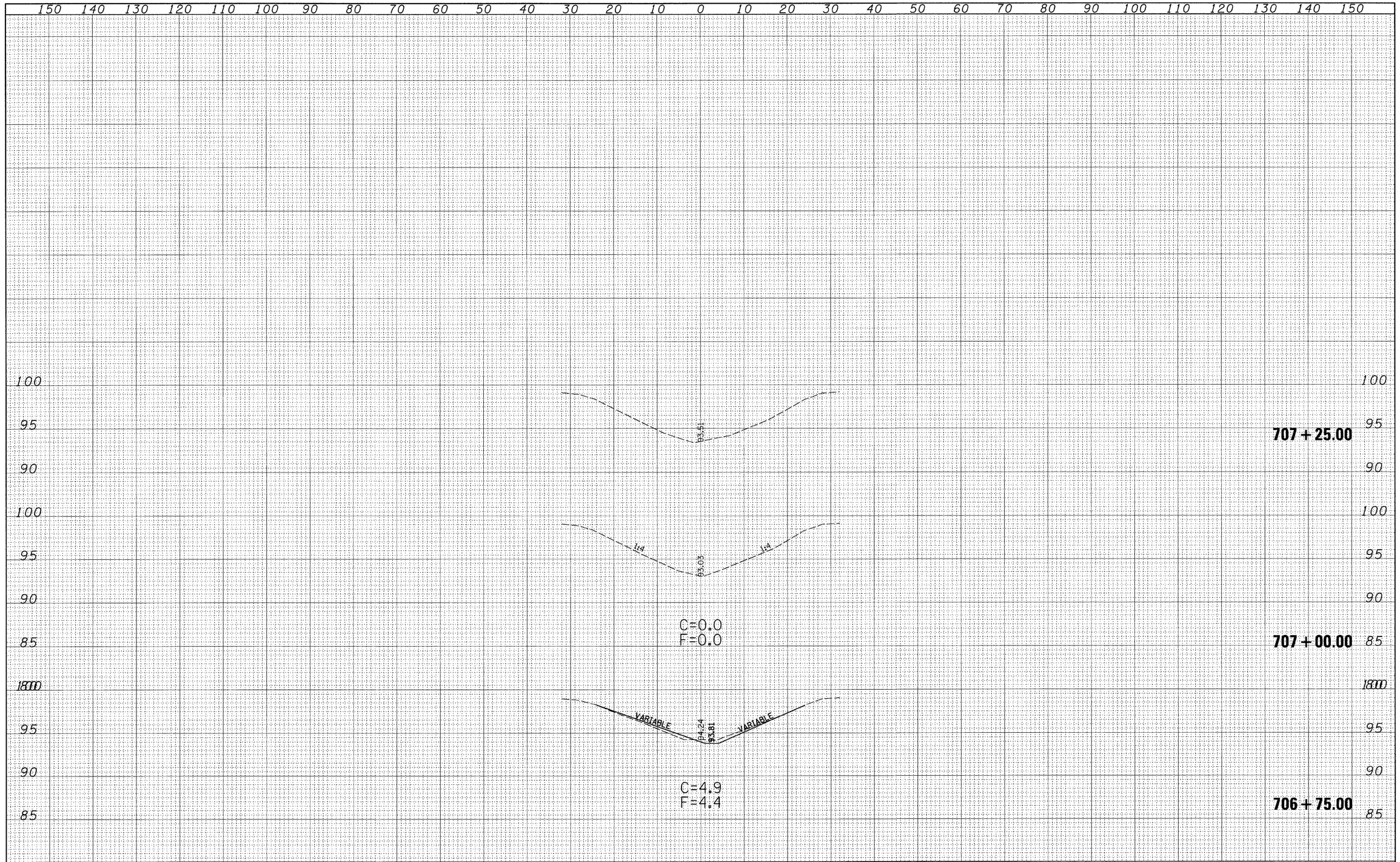

FINAL SURVEY		BY	DATE
NOTE BOOK NO.	SURVEYED		
	PLOTTED		
	TEMPLATE		
	AREAS		
	AREAS CHECKED		

ORIGINAL SURVEY		BY	DATE
NOTE BOOK NO.	SURVEYED		
	PLOTTED		
	TEMPLATE		
	AREAS		
	AREAS CHECKED		

FILE NAME = c:\pw_work\PWIDOT\DAVISONJL\dms36538\s0049sheet_74313.dgn	USER NAME = davisonjl	DESIGNED - JLD	REVISED -
		DRAWN - JLD	REVISED -
	PLOT SCALE = 10.0000 ' / IN.	CHECKED -	REVISED -
	PLOT DATE = 1/20/2009	DATE -	REVISED -

STATE OF ILLINOIS
DEPARTMENT OF TRANSPORTATION

CROSS SECTIONS
S.N. 026-0049

SCALE: 10:5 | SHEET NO. 5 OF 5 SHEETS | STA. 706+75.00 TO STA. 707+25.00

F.A.I. RTE.	SECTION	COUNTY	TOTAL SHEETS	SHEET NO.
70	D7 SAFETY 2009-1	FAYETTE	100	42
		CONTRACT NO. 74313		

FED. ROAD DIST. NO. | ILLINOIS | FED. AID PROJECT

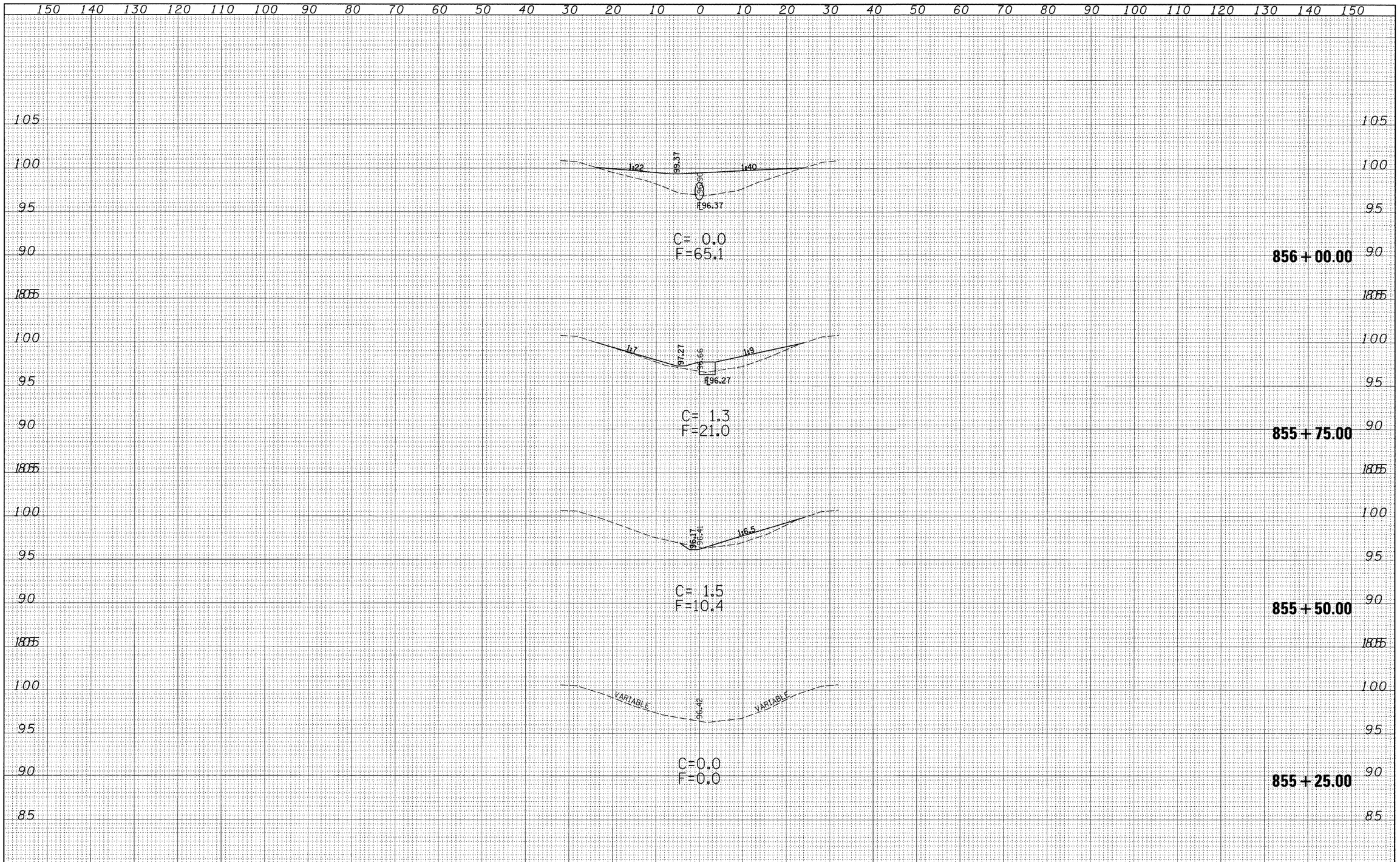

FINAL SURVEY	BY	DATE
SURVEYED		
PLOTTED		
TEMPLATE		
AREAS		
AREAS CHECKED		
NOTE BOOK NO.		

ORIGINAL SURVEY	BY	DATE
SURVEYED		
PLOTTED		
TEMPLATE		
AREAS		
AREAS CHECKED		
NOTE BOOK NO.		

FILE NAME = c:\pw_work\PWIDOT\DAVISONJL\dms36538\xs0054sheet_74313.dgn	USER NAME = davisonjl	DESIGNED - JLD	REVISED -
		DRAWN - JLD	REVISED -
	PLOT SCALE = 10.0000 ' / IN.	CHECKED -	REVISED -
	PLOT DATE = 1/20/2009	DATE -	REVISED -

STATE OF ILLINOIS
DEPARTMENT OF TRANSPORTATION

CROSS SECTIONS
S.N. 026-0054

SCALE: 10:5 | SHEET NO. 1 OF 5 SHEETS | STA. 855+25.00 TO STA. 856+00.00

F.A.I. RTE.	SECTION	COUNTY	TOTAL SHEETS	SHEET NO.
70	D7 SAFETY 2009-1	FAYETTE	100	43

CONTRACT NO. 74313

FED. ROAD DIST. NO. | ILLINOIS | FED. AID PROJECT

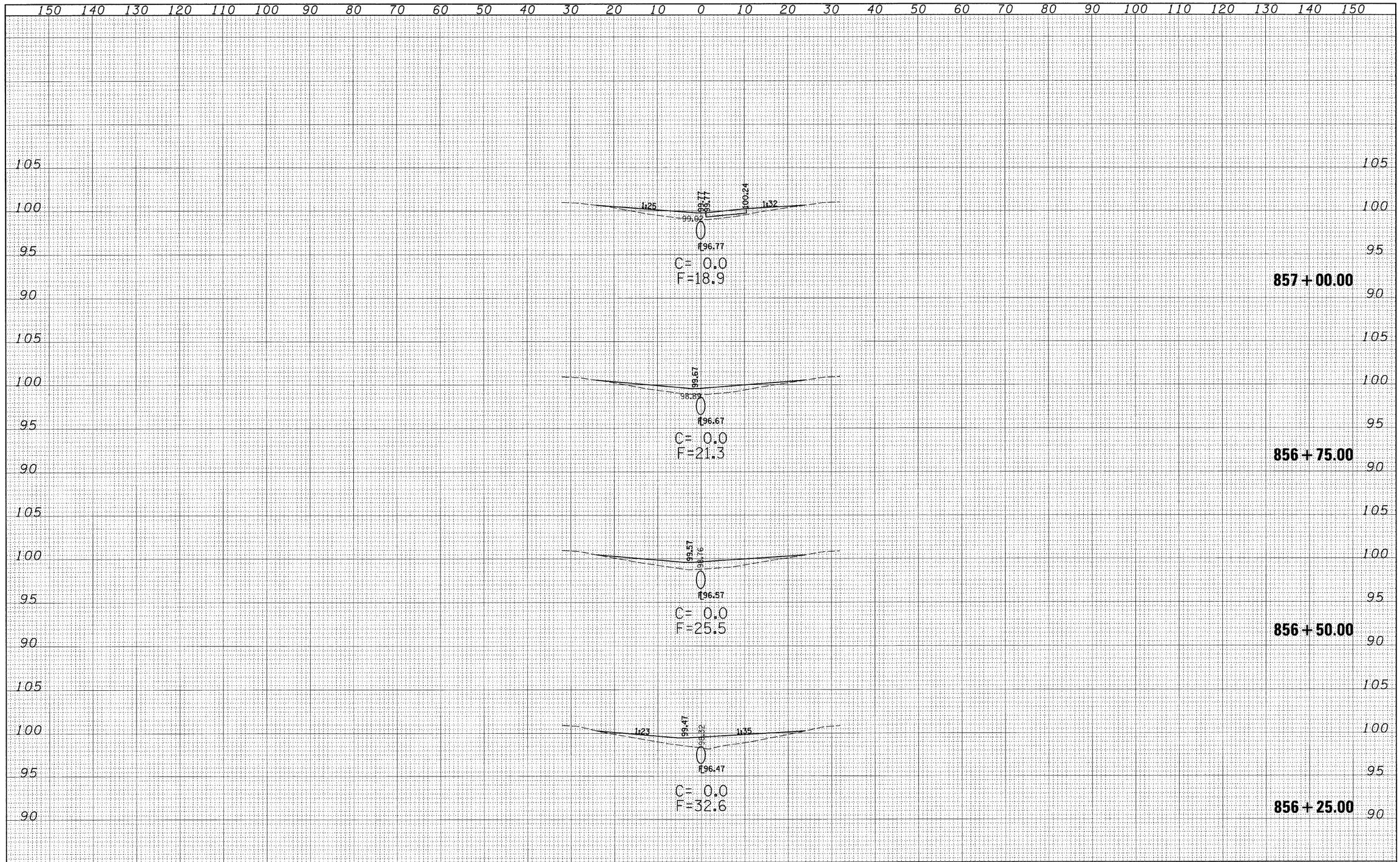

FINAL SURVEY	BY	DATE
SURVEYED		
PLOTTED		
TRAVERSE		
NOTE BOOK		
AREAS		
NO. AREAS CHECKED		

ORIGINAL SURVEY	BY	DATE
SURVEYED		
PLOTTED		
TRAVERSE		
NOTE BOOK		
AREAS		
NO. AREAS CHECKED		

FILE NAME = c:\pw_work\PWIDOT\DAVISONJL\dms36538\xs0054sheet_74313.dgn	USER NAME = davisonjl	DESIGNED - JLD	REVISED -
		DRAWN - JLD	REVISED -
	PLOT SCALE = 10.0000 ' / IN.	CHECKED -	REVISED -
	PLOT DATE = 1/20/2009	DATE -	REVISED -

STATE OF ILLINOIS
DEPARTMENT OF TRANSPORTATION

CROSS SECTIONS
S.N. 026-0054

SCALE: 10:5 | SHEET NO. 2 OF 5 SHEETS | STA. 856+25.00 TO STA. 857+00.00

F.A.I. RTE.	SECTION	COUNTY	TOTAL SHEETS	SHEET NO.
70	D7 SAFETY 2009-1	FAYETTE	100	44
		CONTRACT NO. 74313		

FED. ROAD DIST. NO. | ILLINOIS | FED. AID PROJECT

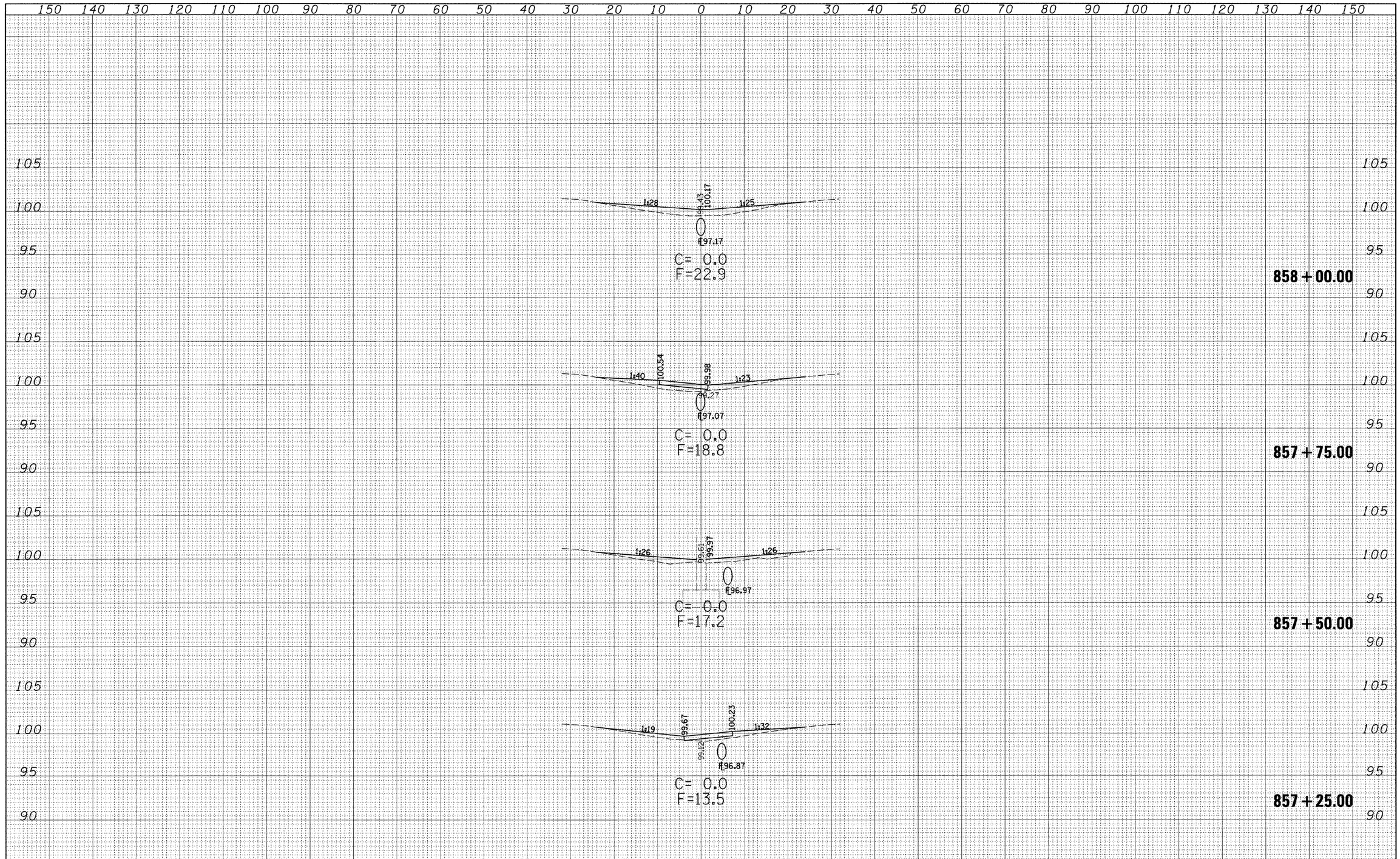

FINAL SURVEY	BY	DATE
SURVEYED		
PLOTTED		
ROUGHED		
AREAS		
AREAS CHECKED		
NOTE BOOK NO.		

ORIGINAL SURVEY	BY	DATE
SURVEYED		
PLOTTED		
ROUGHED		
AREAS		
AREAS CHECKED		
NOTE BOOK NO.		

FILE NAME = c:\pw_work\PWIDOT\DAVISONJL\dms36538\xs0054sheet_74313.dgn	USER NAME = davisonjl	DESIGNED - JLD	REVISED -
		DRAWN - JLD	REVISED -
	PLOT SCALE = 10.0000 ' / IN.	CHECKED -	REVISED -
	PLOT DATE = 1/20/2009	DATE -	REVISED -

STATE OF ILLINOIS
DEPARTMENT OF TRANSPORTATION

CROSS SECTIONS
S.N. 026-0054

SCALE: 10:5 | SHEET NO. 3 OF 5 SHEETS | STA. 857+25.00 TO STA. 858+00.00

F.A.I. RTE.	SECTION	COUNTY	TOTAL SHEETS	SHEET NO.
70	D7 SAFETY 2009-1	FAYETTE	100	45
		CONTRACT NO. 74313		

FED. ROAD DIST. NO. | ILLINOIS | FED. AID PROJECT

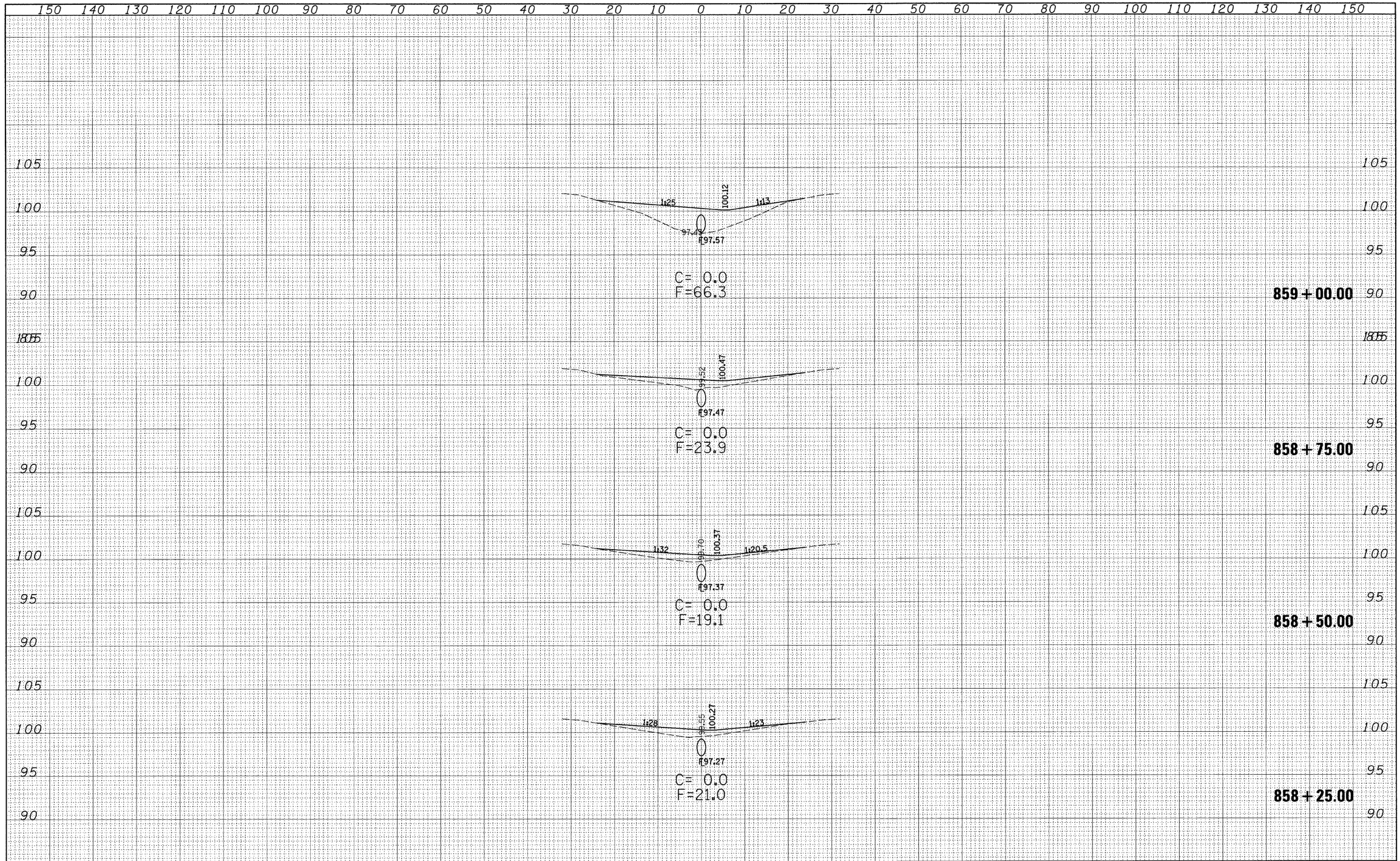

FINAL SURVEY	BY	DATE
SURVEYED		
PLOTTED		
TEMPLATE		
AREAS		
AREAS CHECKED		

NOTE BOOK NO.

ORIGINAL SURVEY	BY	DATE
SURVEYED		
PLOTTED		
TEMPLATE		
AREAS		
AREAS CHECKED		

NOTE BOOK NO.

FILE NAME = c:\pw_work\PWIDOT\DAVISONJL\dms36538\xs0054sheet_74313.dgn

USER NAME = davisonjl	DESIGNED - JLD	REVISED -	
	DRAWN - JLD	REVISED -	
PLOT SCALE = 10.0000 ' / IN.	CHECKED -	REVISED -	
PLOT DATE = 1/20/2009	DATE -	REVISED -	

STATE OF ILLINOIS
DEPARTMENT OF TRANSPORTATION

CROSS SECTIONS
S.N. 026-0054

SCALE: 10:5 | SHEET NO. 4 OF 5 SHEETS | STA. 858+25.00 TO STA. 859+00.00

F.A.I. RTE.	SECTION	COUNTY	TOTAL SHEETS	SHEET NO.
TO	D7 SAFETY 2009-1	FAYETTE	100	46
		CONTRACT NO. 74313		

FED. ROAD DIST. NO. | ILLINOIS | FED. AID PROJECT

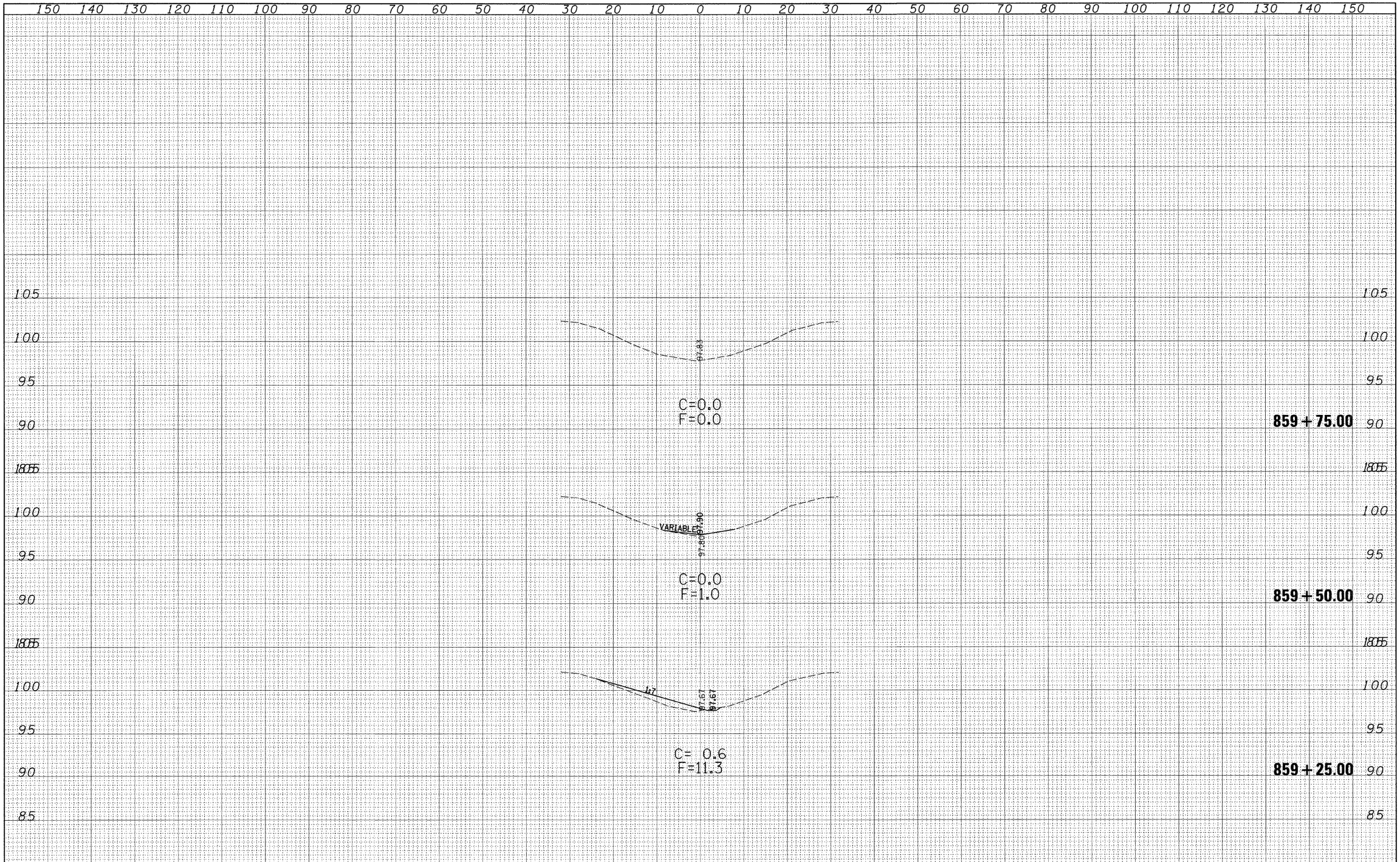

FILE NAME = c:\pw_work\PWIDOT\DAVISONJL\dms36538\ss0054sheet_74313.dgn	USER NAME = davisonjl	DESIGNED - JLD	REVISED -
		DRAWN - JLD	REVISED -
	PLOT SCALE = 10.0000 ' / IN.	CHECKED -	REVISED -
	PLOT DATE = 1/20/2009	DATE -	REVISED -

STATE OF ILLINOIS
DEPARTMENT OF TRANSPORTATION

CROSS SECTIONS
S.N. 026-0054

SCALE: 10:5 | SHEET NO. 5 OF 5 SHEETS | STA. 859+25.00 TO STA. 859+75.00

F.A.I. RTE.	SECTION	COUNTY	TOTAL SHEETS	SHEET NO.
70	D7 SAFETY 2009-1	FAYETTE	100	47
		CONTRACT NO. 74313		

FED. ROAD DIST. NO. | ILLINOIS | FED. AID PROJECT

FINAL SURVEY		BY	DATE
NOTE BOOK NO.	SURVEYED		
	PLOTTED		
	TEMPLATE		
	AREAS		
	AREAS CHECKED		

ORIGINAL SURVEY		BY	DATE
NOTE BOOK NO.	SURVEYED		
	PLOTTED		
	TEMPLATE		
	AREAS		
	AREAS CHECKED		

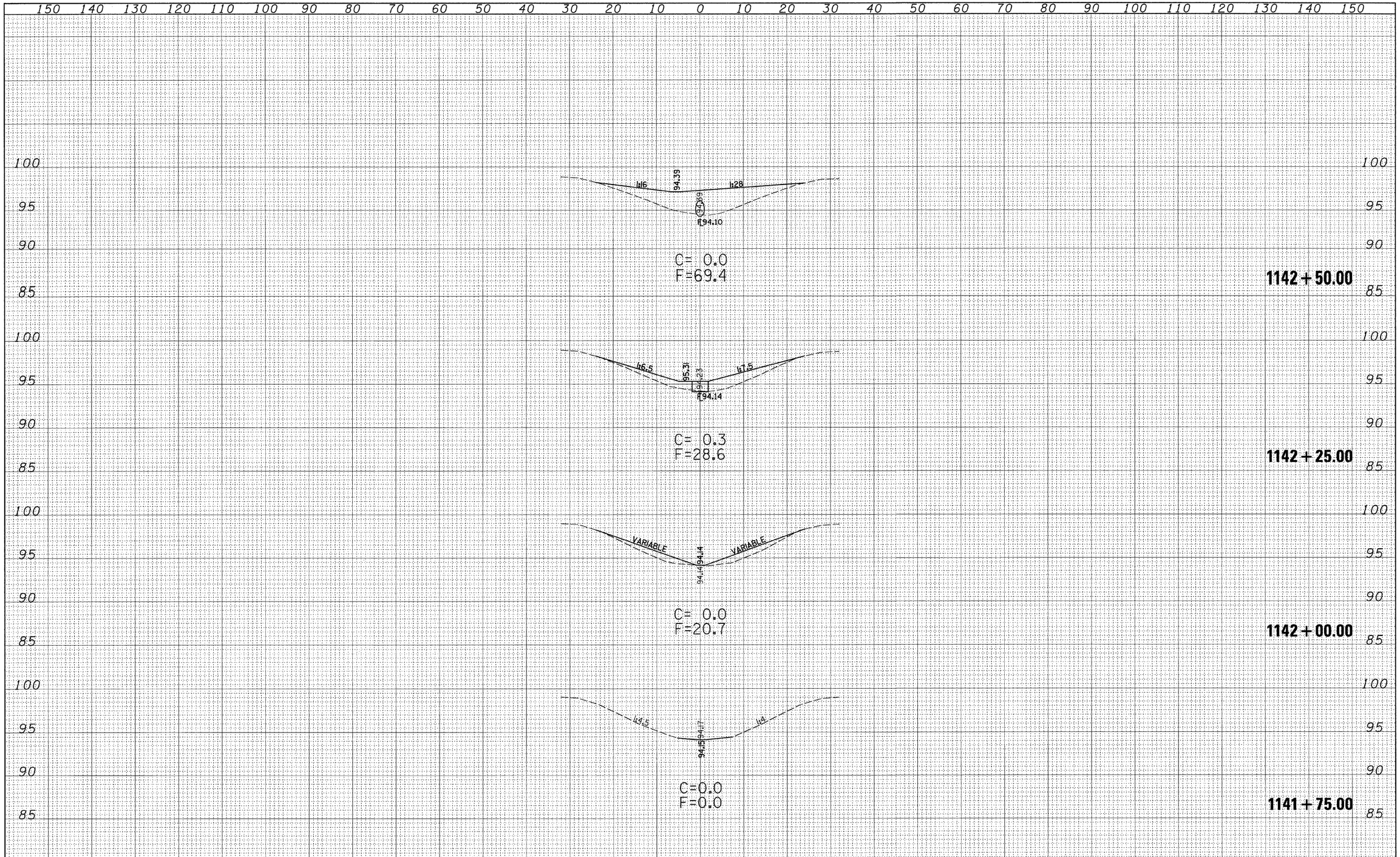

FINAL SURVEY	SURVEYED	BY	DATE
	PLOTTED		
NOTE BOOK	TEMPLATE		
	AREAS		
NO.	AREAS CHECKED		

ORIGINAL SURVEY	SURVEYED	BY	DATE
	PLOTTED		
NOTE BOOK	TEMPLATE		
	AREAS		
NO.	AREAS CHECKED		

FILE NAME = c:\pw_work\PWIDOT\DAVISONJL\dms36538\xs0055sheet_74313.dgn	USER NAME = davison_jl	DESIGNED - JLD	REVISED -
		DRAWN - JLD	REVISED -
	PLOT SCALE = 10.0000 ' / IN.	CHECKED -	REVISED -
	PLOT DATE = 1/20/2009	DATE -	REVISED -

STATE OF ILLINOIS
DEPARTMENT OF TRANSPORTATION

CROSS SECTIONS
S.N. 026-0055

SCALE: 1:5 | SHEET NO. 1 OF 5 SHEETS | STA. 1141+75.00 TO STA. 1142+50.00

F.A.I. RTE.	SECTION	COUNTY	TOTAL SHEETS	SHEET NO.
70	D7 SAFETY 2009-1	FAYETTE	100	48
		CONTRACT NO. 74313		

FED. ROAD DIST. NO. | ILLINOIS | FED. AID PROJECT

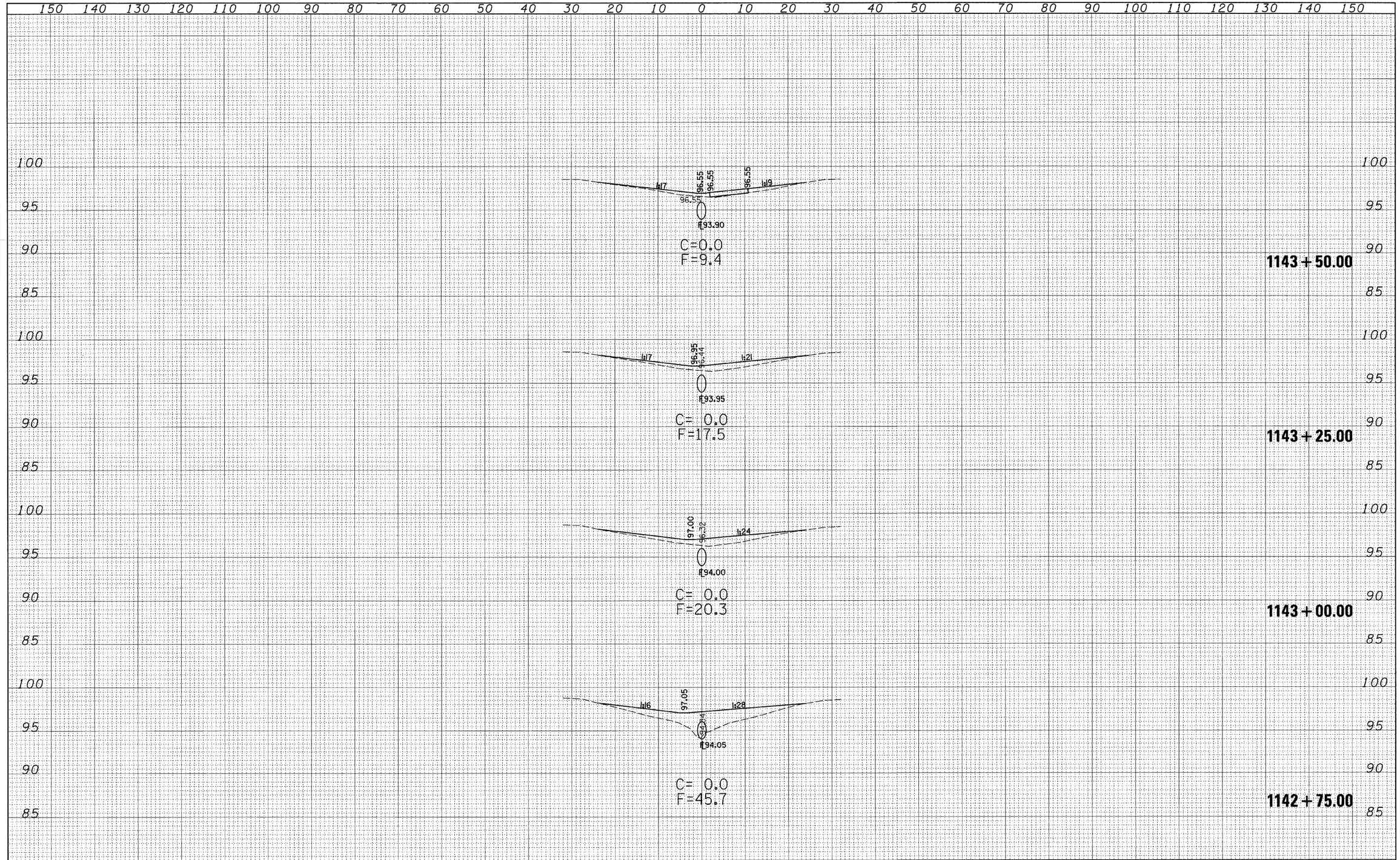

FILE NAME = c:\pw_work\PWIDOT\DAVISONJL\dms36538\xs0055sheet_74313.dgn	USER NAME = davisonjl	DESIGNED - JLD	REVISED -
		DRAWN - JLD	REVISED -
	PLOT SCALE = 10.0000 ' / IN.	CHECKED -	REVISED -
	PLOT DATE = 1/20/2009	DATE -	REVISED -

STATE OF ILLINOIS
DEPARTMENT OF TRANSPORTATION

CROSS SECTIONS
S.N. 026-0055

SCALE: 10:5 | SHEET NO. 2 OF 5 SHEETS | STA. 1142+75.00 TO STA. 1143+50.00

F.A.I. RTE.	SECTION	COUNTY	TOTAL SHEETS	SHEET NO.
70	D7 SAFETY 2009-1	FAYETTE	100	49
		CONTRACT NO. 74313		

FED. ROAD DIST. NO. | ILLINOIS | FED. AID PROJECT

FINAL SURVEY		BY	DATE
	SURVEYED		
	PLOTTED		
	TEMPLATE		
NOTE BOOK	AREAS		
NO.	AREAS CHECKED		

ORIGINAL SURVEY		BY	DATE
	SURVEYED		
	PLOTTED		
	TEMPLATE		
NOTE BOOK	AREAS		
NO.	AREAS CHECKED		

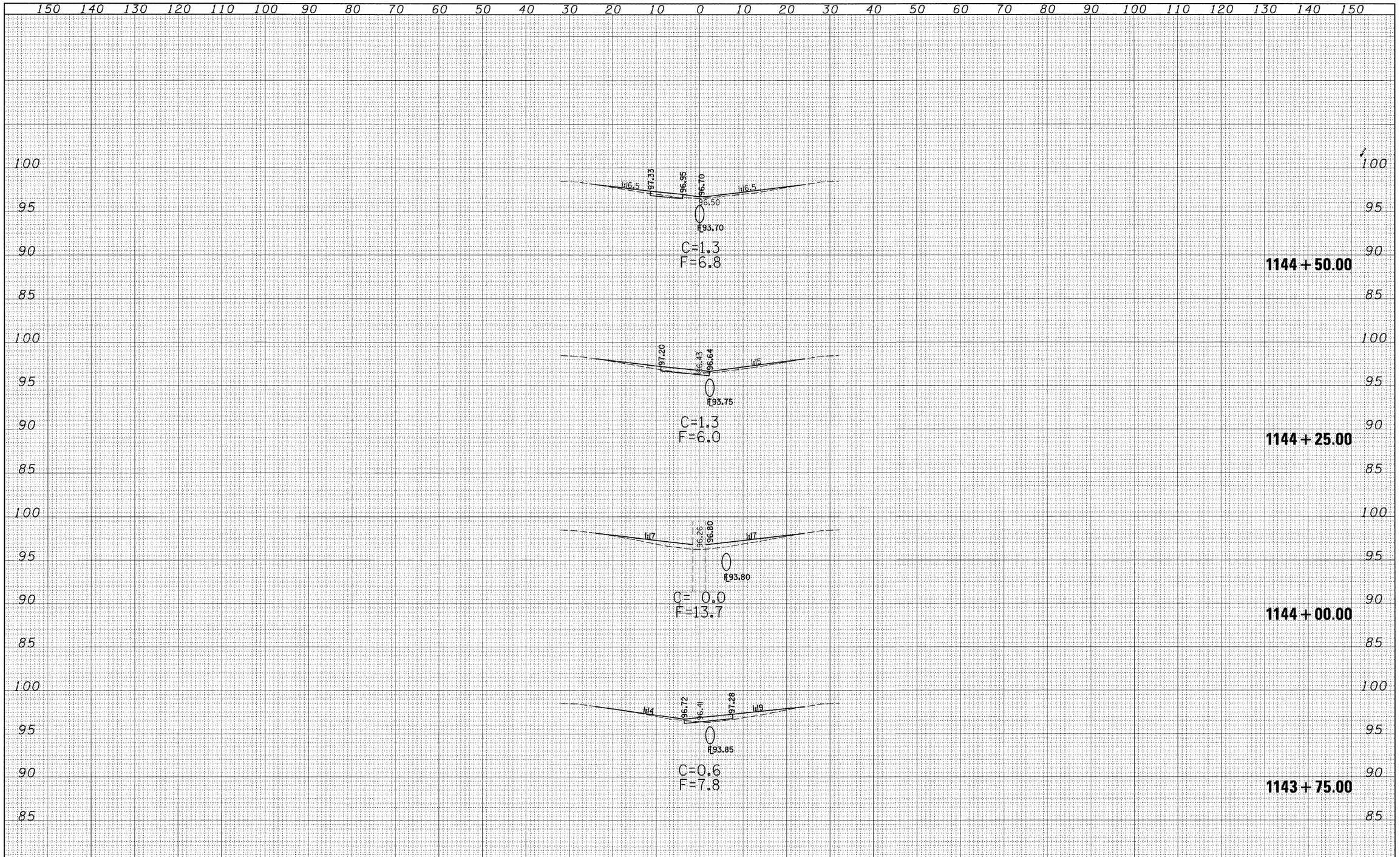

FINAL SURVEY		BY	DATE
NOTE BOOK	SURVEYED		
	PLOTTED		
	TEMPLATE		
	AREAS		
NO.	AREAS CHECKED		

ORIGINAL SURVEY		BY	DATE
NOTE BOOK	SURVEYED		
	PLOTTED		
	TEMPLATE		
	AREAS		
NO.	AREAS CHECKED		

FILE NAME = c:\pw_work\PWIDOT\DAVISONJL\dms36538\xs0055sheet_74313.dgn	USER NAME = davisonjl	DESIGNED - JLD	REVISED -
		DRAWN - JLD	REVISED -
	PLOT SCALE = 10.0000 ' / IN.	CHECKED -	REVISED -
	PLOT DATE = 1/20/2009	DATE -	REVISED -

STATE OF ILLINOIS
DEPARTMENT OF TRANSPORTATION

CROSS SECTIONS
S.N. 026-0055

SCALE: 10:5 | SHEET NO. 3 OF 5 SHEETS | STA. 1143+75.00 TO STA. 1144+50.00

F.A.I. RTE.	SECTION	COUNTY	TOTAL SHEETS	SHEET NO.
70	D7 SAFETY 2009-1	FAYETTE	100	50
		CONTRACT NO. 74313		

FED. ROAD DIST. NO. | ILLINOIS | FED. AID PROJECT

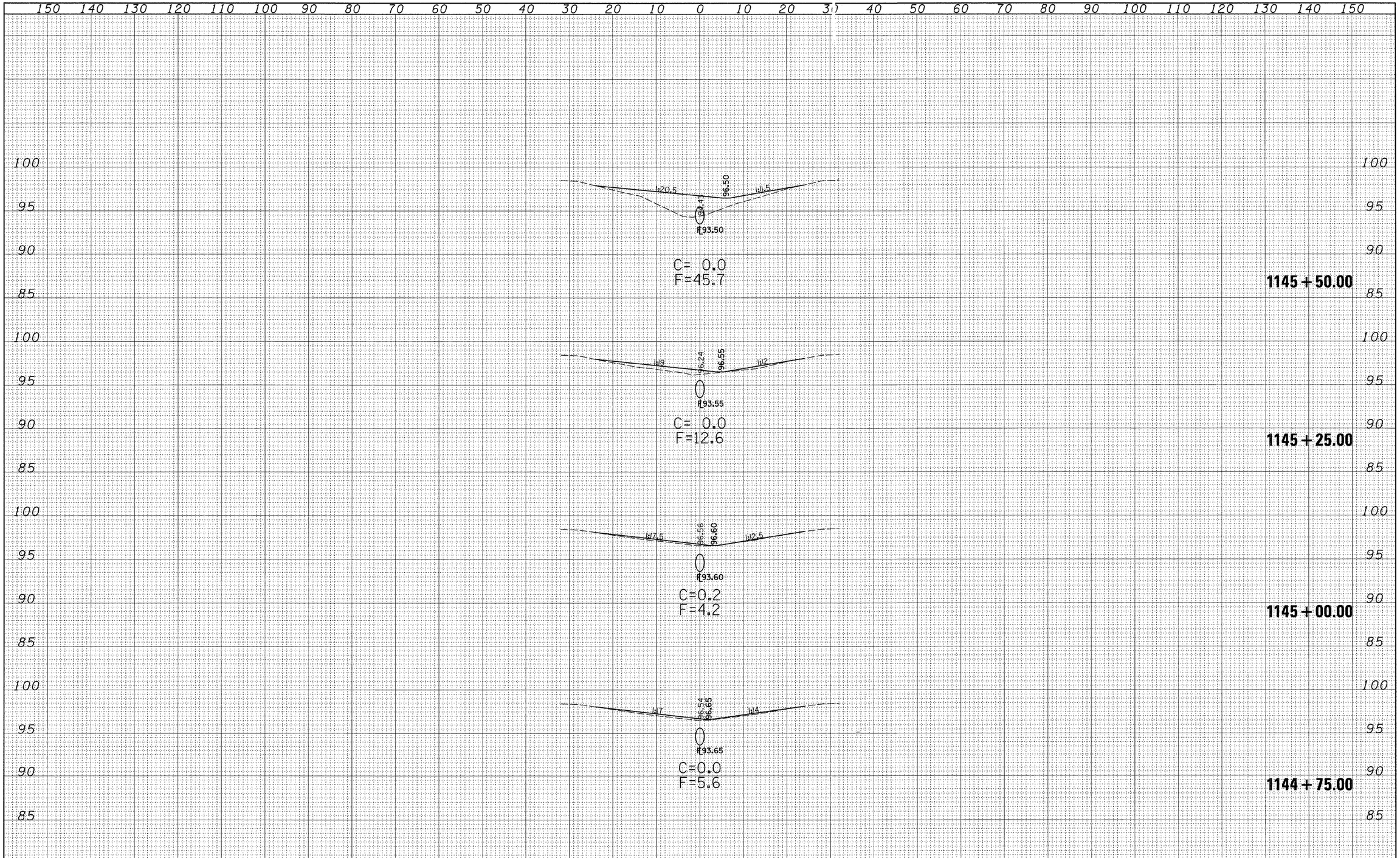

FINAL SURVEY	SURVEYED	BY	DATE
NOTE BOOK	PLOTTED		
	TEMPLATE		
NO.	AREAS		
	AREAS CHECKED		

ORIGINAL SURVEY	SURVEYED	BY	DATE
NOTE BOOK	PLOTTED		
	TEMPLATE		
NO.	AREAS		
	AREAS CHECKED		

FILE NAME = c:\pw_work\PWIDOT\DAVISONJL\dms36538\xs0055sheet_74313.dgn	USER NAME = davisonjl	DESIGNED - JLD	REVISED -
		DRAWN - JLD	REVISED -
	PLOT SCALE = 10.0000 ' / IN.	CHECKED	REVISED -
	PLOT DATE = 1/20/2009	DATE -	REVISED -

STATE OF ILLINOIS
DEPARTMENT OF TRANSPORTATION

CROSS SECTIONS
S.N. 026-0055

SCALE: 10:5 | SHEET NO. 4 OF 5 SHEETS | STA. 1144+75.00 TO STA. 1145+50.00

F.A.I. RTE.	SECTION	COUNTY	TOTAL SHEETS	SHEET NO.
70	D7 SAFETY 2009-1	FAYETTE	100	51
		CONTRACT NO. 74313		

FED. ROAD DIST. NO. | ILLINOIS | FED. AID PROJECT

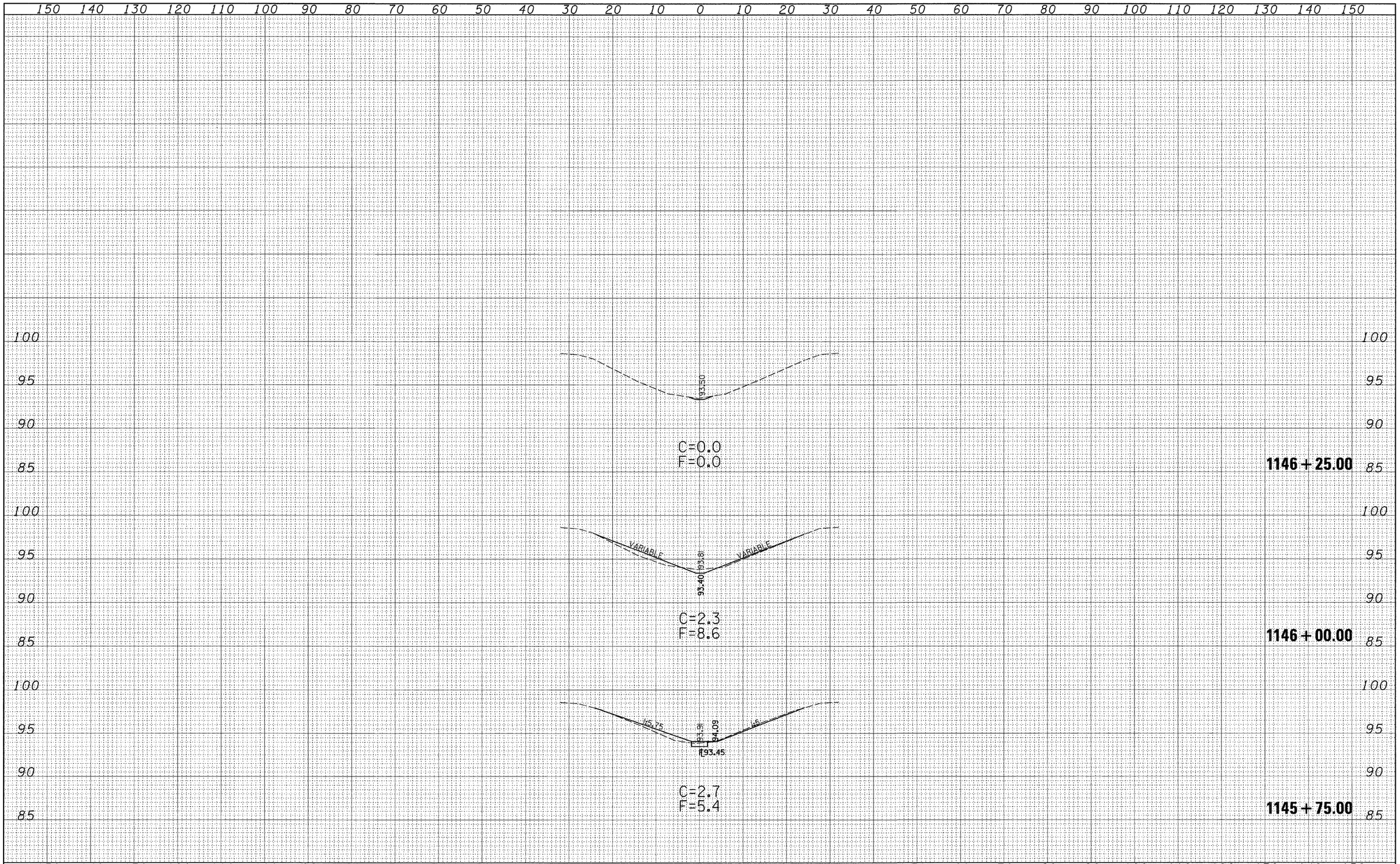

FINAL SURVEY		BY	DATE
NOTE BOOK	SURVEYED		
	PLOTTED		
	TEMPLATE		
	AREAS		
NO.	AREAS CHECKED		

ORIGINAL SURVEY		BY	DATE
NOTE BOOK	SURVEYED		
	PLOTTED		
	TEMPLATE		
	AREAS		
NO.	AREAS CHECKED		

FILE NAME = c:\pw_work\PWIDOT\DAVISONJL\dms36538\xs0055sheet_74313.dgn	USER NAME = davisonjl	DESIGNED - JLD	REVISED -
		DRAWN - JLD	REVISED -
	PLOT SCALE = 10.0000 ' / IN.	CHECKED -	REVISED -
	PLOT DATE = 1/20/2009	DATE -	REVISED -

STATE OF ILLINOIS
DEPARTMENT OF TRANSPORTATION

CROSS SECTIONS
S.N. 026-0055

SCALE: 10:5 | SHEET NO. 5 OF 5 SHEETS | STA. 1145+75.00 TO STA. 1146+25.00

F.A.I. RTE.	SECTION	COUNTY	TOTAL SHEETS	SHEET NO.
70	D7 SAFETY 2009-1	FAYETTE	100	52
		CONTRACT NO. 74313		

FED. ROAD DIST. NO. | ILLINOIS | FED. AID PROJECT

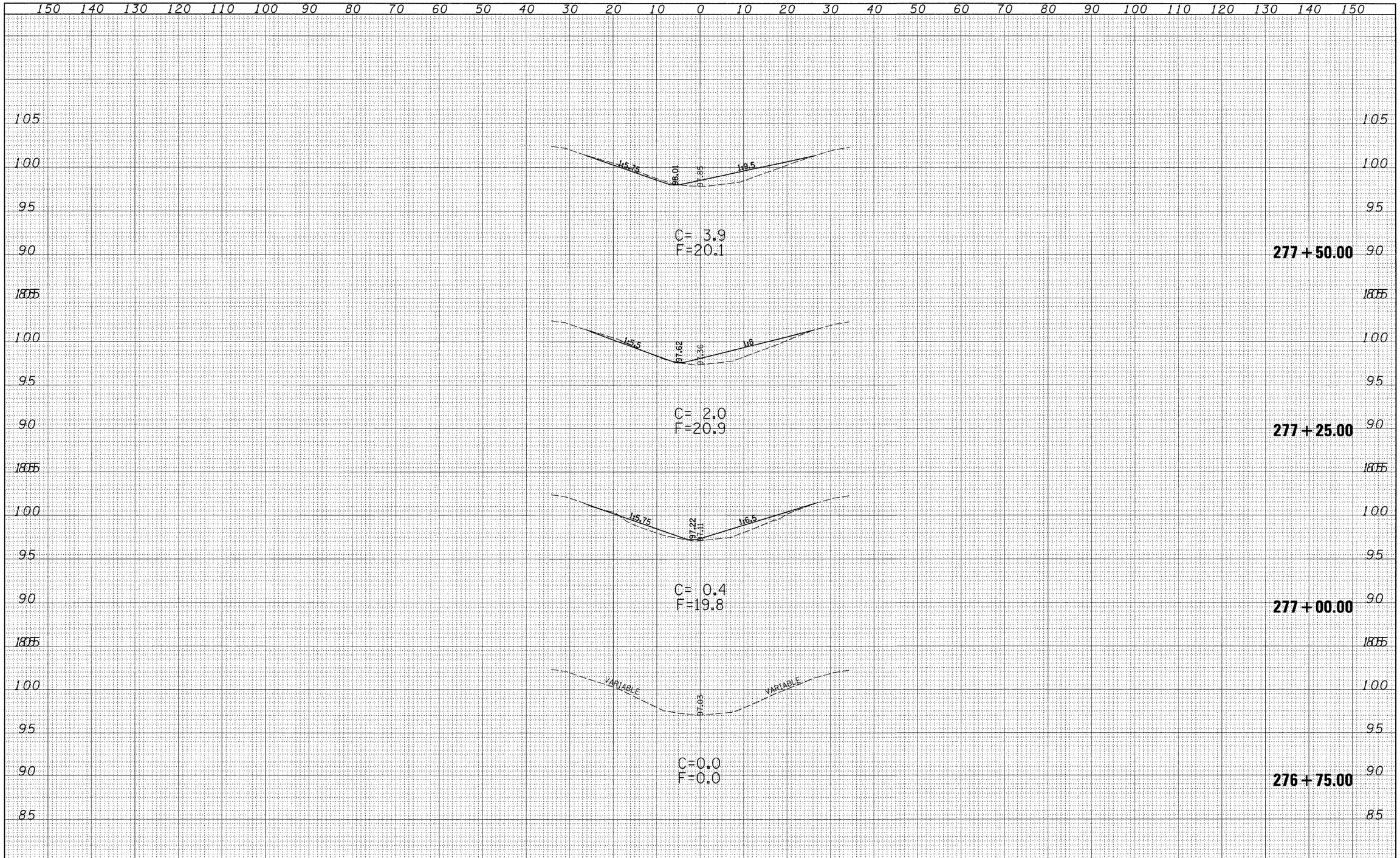

FINAL SURVEY	BY	DATE
SURVEYED		
PLOTTED		
TRAVERSE		
NOTE BOOK		
AREAS		
AREAS CHECKED		
NO.		

ORIGINAL SURVEY	BY	DATE
SURVEYED		
PLOTTED		
TRAVERSE		
NOTE BOOK		
AREAS		
AREAS CHECKED		
NO.		

FILE NAME =
c:\pw_work\PWIDOT\DAVISONJL\dms36538\xs0073sheet_74313.dgn

USER NAME = davisonjl	DESIGNED - JLD	REVISED -	
	DRAWN - JLD	REVISED -	
PLOT SCALE = 10.0000 ' / IN.	CHECKED -	REVISED -	
PLOT DATE = 1/20/2009	DATE -	REVISED -	

STATE OF ILLINOIS
DEPARTMENT OF TRANSPORTATION

CROSS SECTIONS
S.N. 026-0073

SCALE: 10:5 | SHEET NO. 1 OF 5 SHEETS | STA. 276+75.00 TO STA. 277+50.00

F.A.I. RTE.	SECTION	COUNTY	TOTAL SHEETS	SHEET NO.
70	DT SAFETY 2009-1	FAYETTE	100	53

CONTRACT NO. 74313

FED. ROAD DIST. NO. | ILLINOIS | FED. AID PROJECT

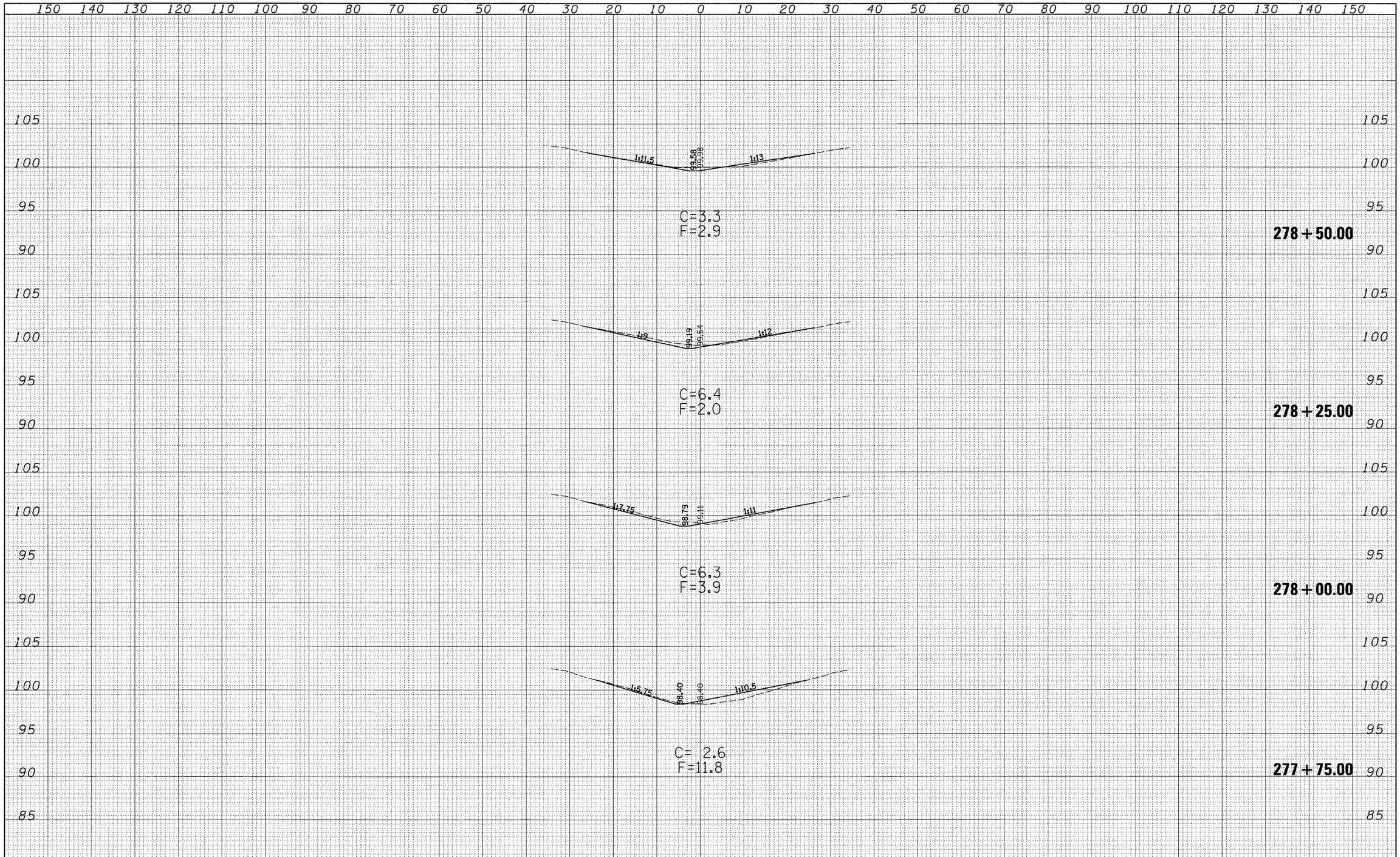

FINAL SURVEY	BY	DATE
SURVEYED		
PLOTTED		
TEMPLATE		
AREAS		
AREAS CHECKED		
NOTE BOOK NO.		

ORIGINAL SURVEY	BY	DATE
SURVEYED		
PLOTTED		
TEMPLATE		
AREAS		
AREAS CHECKED		
NOTE BOOK NO.		

FILE NAME = c:\pw_work\PWIDOT\DAVISONJL\dms36538\xs0073sheet_74313.dgn	USER NAME = davisonjl	DESIGNED - JLD	REVISED -
		DRAWN - JLD	REVISED -
	PLOT SCALE = 10.0000 ' / IN.	CHECKED -	REVISED -
	PLOT DATE = 1/20/2009	DATE -	REVISED -

STATE OF ILLINOIS
DEPARTMENT OF TRANSPORTATION

CROSS SECTIONS
S.N. 026-0073

SCALE: 10:5 | SHEET NO. 2 OF 5 SHEETS | STA. 277+75.00 TO STA. 278+50.00

F.A.I. RTE.	SECTION	COUNTY	TOTAL SHEETS	SHEET NO.
70	D7 SAFETY 2009-1	FAYETTE	100	54
		CONTRACT NO. 74313		
FED. ROAD DIST. NO.	ILLINOIS	FED. AID PROJECT		

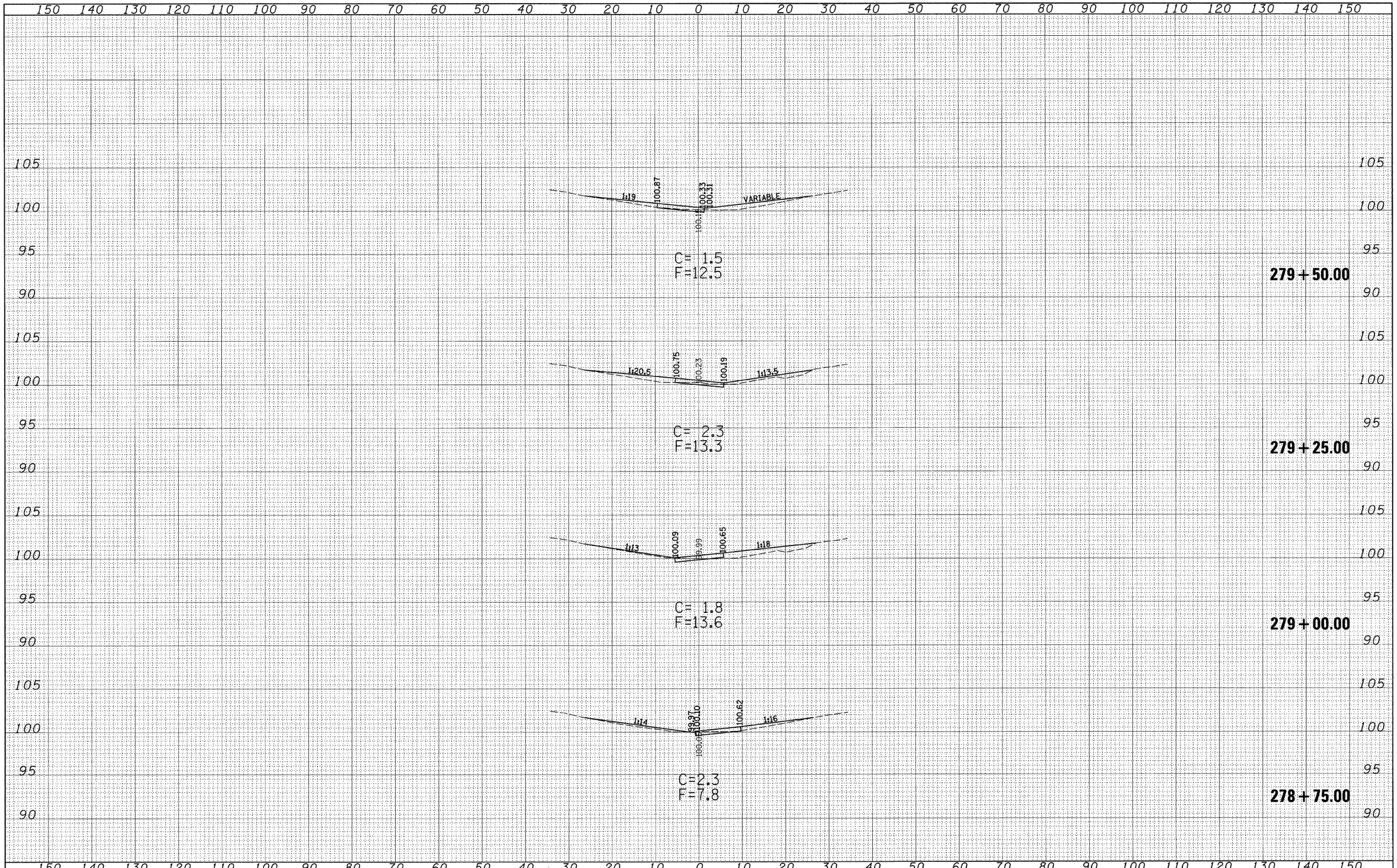

FINAL SURVEY		BY	DATE
NOTE BOOK NO.	SURVEYED		
	PLOTTED		
	TEMPLATE		
	AREAS		
	AREAS CHECKED		

ORIGINAL SURVEY		BY	DATE
NOTE BOOK NO.	SURVEYED		
	PLOTTED		
	TEMPLATE		
	AREAS		
	AREAS CHECKED		

FILE NAME = c:\pw_work\PWIDOT\DAVISONJL\dms36538\xs0073sheet_74313.dgn	USER NAME = davisonjl	DESIGNED - JLD	REVISED -
		DRAWN - JLD	REVISED -
	PLOT SCALE = 10.0000 ' / IN.	CHECKED -	REVISED -
	PLOT DATE = 1/20/2009	DATE -	REVISED -

STATE OF ILLINOIS
DEPARTMENT OF TRANSPORTATION

CROSS SECTIONS
S.N. 026-0073

SCALE: 10:5 | SHEET NO. 3 OF 5 SHEETS | STA. 278+75.00 TO STA. 279+50.00

F.A.I. RTE.	SECTION	COUNTY	TOTAL SHEETS	SHEET NO.
70	D7 SAFETY 2009-1	FAYETTE	100	55
		CONTRACT NO. 74313		

FED. ROAD DIST. NO. | ILLINOIS | FED. AID PROJECT

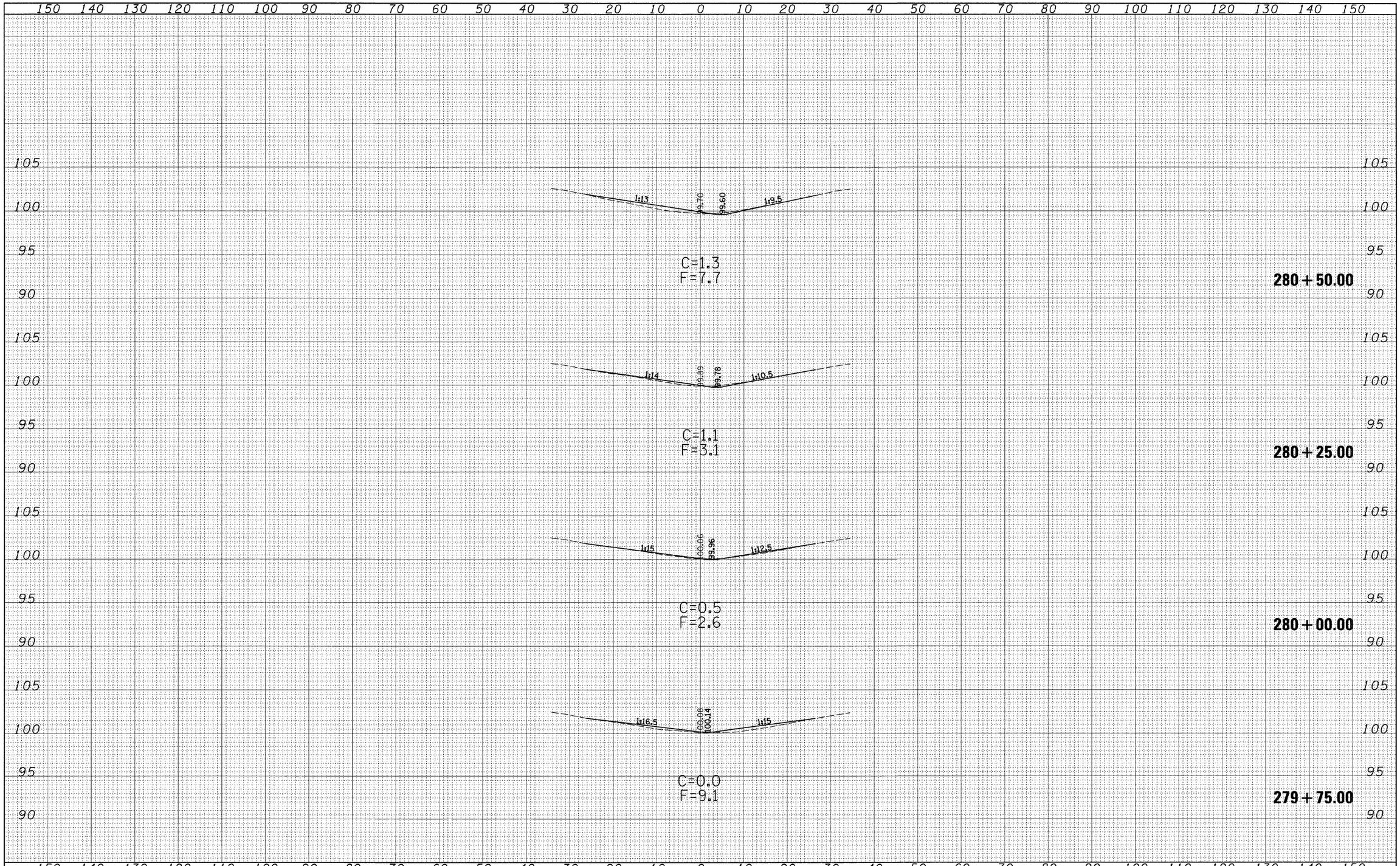

ORIGINAL SURVEY	BY	DATE
SURVEYED		
PLOTTED		
TOPOGRAPHY		
NOTE BOOK		
NO.	AREAS CHECKED	

FINAL SURVEY	BY	DATE
SURVEYED		
PLOTTED		
TOPOGRAPHY		
NOTE BOOK		
NO.	AREAS CHECKED	

FILE NAME = c:\pw_work\PWIDOT\DAVISONJL\dms36538\xs0073sheet_74313.dgn	USER NAME = davisonjl	DESIGNED - JLD	REVISED -
		DRAWN - JLD	REVISED -
	PLOT SCALE = 10.0000 ' / IN.	CHECKED -	REVISED -
	PLOT DATE = 1/20/2009	DATE -	REVISED -

STATE OF ILLINOIS
DEPARTMENT OF TRANSPORTATION

CROSS SECTIONS
S.N. 026-0073

SCALE: 10:5 | SHEET NO. 4 OF 5 SHEETS | STA. 279+75.00 TO STA. 280+50.00

F.A.I. RTE.	SECTION	COUNTY	TOTAL SHEETS	SHEET NO.
70	D7 SAFETY 2009-1	FAYETTE	100	56
		CONTRACT NO. 74313		

FED. ROAD DIST. NO. | ILLINOIS | FED. AID PROJECT

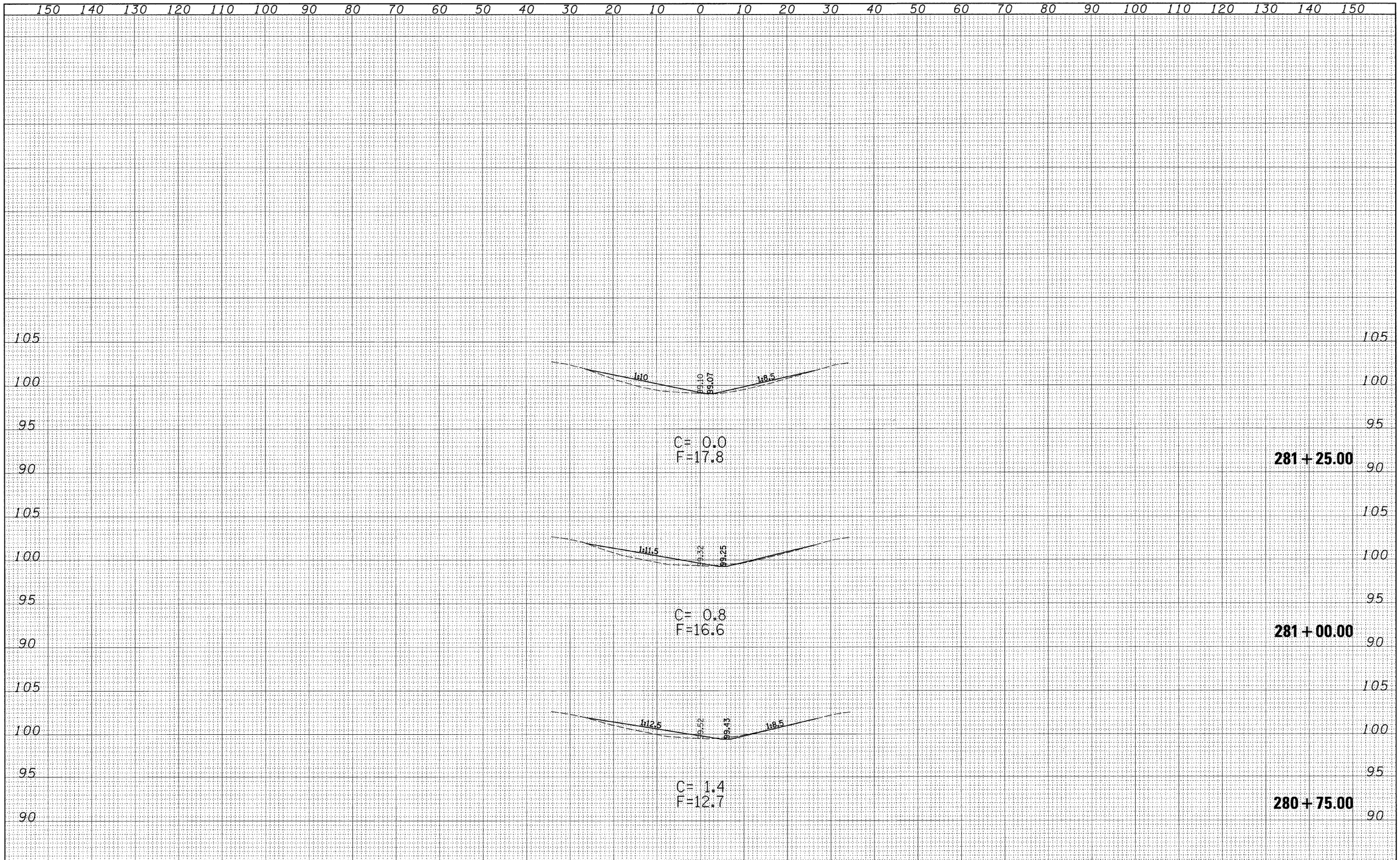

FILE NAME =	USER NAME = davisonjl	DESIGNED - JLD	REVISED -
c:\pw_work\PWIDOT\DAVISONJL\dms36538\xs0073sheet_74313.dgn		DRAWN - JLD	REVISED -
	PLOT SCALE = 10.0000 ' / IN.	CHECKED -	REVISED -
	PLOT DATE = 1/28/2009	DATE -	REVISED -

STATE OF ILLINOIS
DEPARTMENT OF TRANSPORTATION

CROSS SECTIONS
S.N. 026-0073

SCALE: 10:5 | SHEET NO. 5 OF 5 SHEETS | STA. 280+75.00 TO STA. 281+25.00

F.A.I. RTE.	SECTION	COUNTY	TOTAL SHEETS	SHEET NO.
70	D7 SAFETY 2009-1	FAYETTE	100	57

CONTRACT NO. 74313

FED. ROAD DIST. NO. | ILLINOIS | FED. AID PROJECT

FINAL SURVEY		BY	DATE
NOTE BOOK	SURVEYED		
	PLOTTED		
	TOPOGRAPHY		
	SEPARATE AREAS		
NO.	AREAS CHECKED		

ORIGINAL SURVEY		BY	DATE
NOTE BOOK	SURVEYED		
	PLOTTED		
	TOPOGRAPHY		
	SEPARATE AREAS		
NO.	AREAS CHECKED		

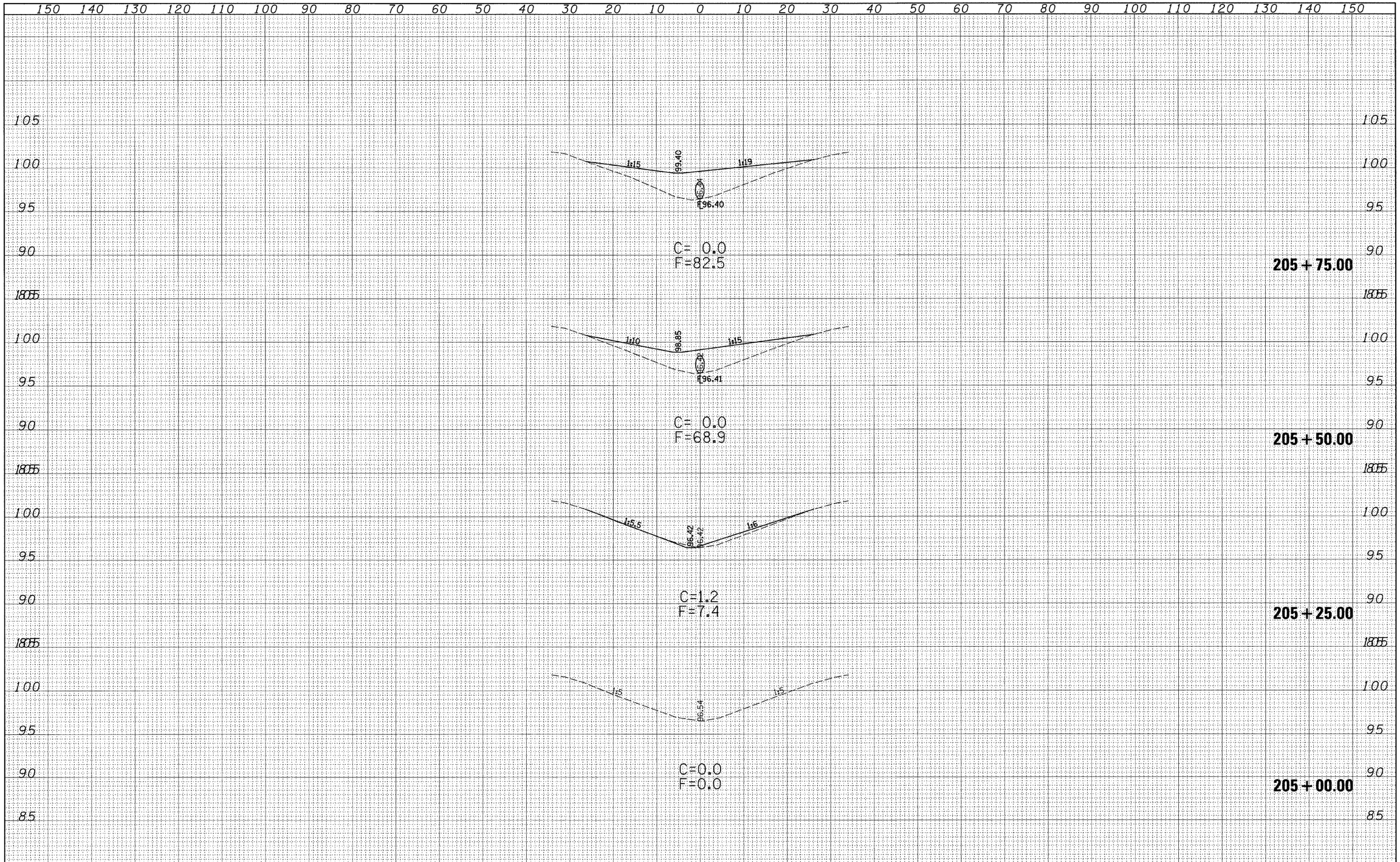

FINAL SURVEY	BY	DATE
SURVEYED		
PLOTTED		
TOPOGRAPHY		
TEMPLATE		
AREAS		
AREAS CHECKED		
NOTE BOOK NO.		

ORIGINAL SURVEY	BY	DATE
SURVEYED		
PLOTTED		
TOPOGRAPHY		
TEMPLATE		
AREAS		
AREAS CHECKED		
NOTE BOOK NO.		

FILE NAME =
c:\pw_work\PWIDOT\DAVISONJL\dms36538\xs0074sheet_74313.dgn

USER NAME = davisonjl
PLOT SCALE = 10.0000 ' / IN.
PLOT DATE = 1/20/2009

DESIGNED - JLD
DRAWN - JLD
CHECKED -
DATE -

REVISED -
REVISED -
REVISED -
REVISED -

STATE OF ILLINOIS
DEPARTMENT OF TRANSPORTATION

CROSS SECTIONS
S.N. 026-0074

SCALE: 10:5 | SHEET NO. 1 OF 5 SHEETS | STA. 205+00.00 TO STA. 205+75.00

F.A.I. RTE.	SECTION	COUNTY	TOTAL SHEETS	SHEET NO.
70	D7 SAFETY 2009-1	FAYETTE	100	58
		CONTRACT NO. 74313		

FED. ROAD DIST. NO. | ILLINOIS | FED. AID PROJECT

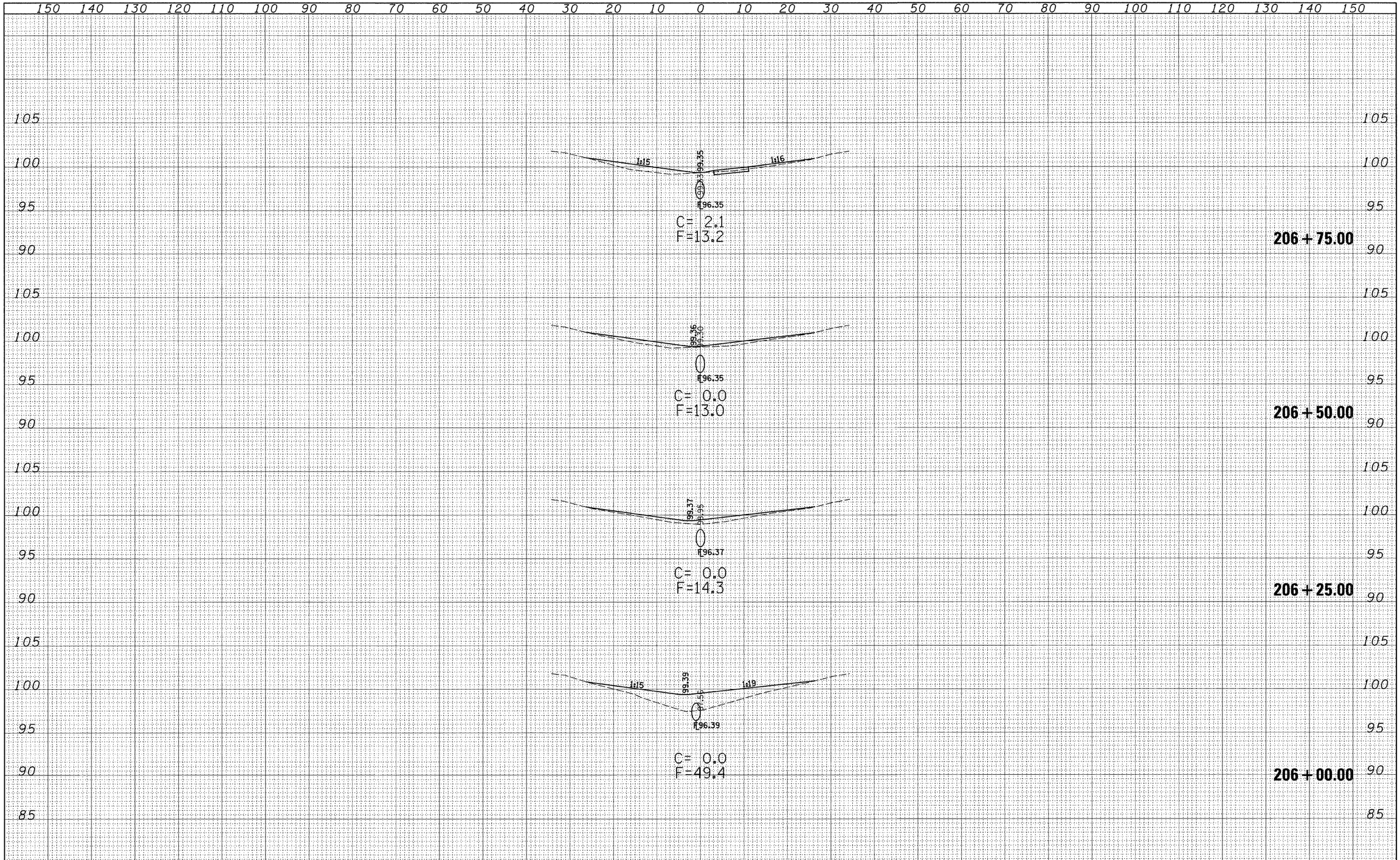

FINAL SURVEY	BY	DATE
SURVEYED		
PLOTTED		
TOPOGRAPHY		
NOTE BOOK		
NO.	AREAS CHECKED	

ORIGINAL SURVEY	BY	DATE
SURVEYED		
PLOTTED		
TOPOGRAPHY		
NOTE BOOK		
NO.	AREAS CHECKED	

FILE NAME = c:\pw_work\PWIDOT\DAVISONJL\dms36538\x0074sheet_74313.dgn	USER NAME = davisonjl	DESIGNED - JLD	REVISED -
		DRAWN - JLD	REVISED -
	PLOT SCALE = 10.0000 ' / IN.	CHECKED -	REVISED -
	PLOT DATE = 1/20/2009	DATE -	REVISED -

STATE OF ILLINOIS
DEPARTMENT OF TRANSPORTATION

CROSS SECTIONS
S.N. 026-0074

SCALE: 10:5 | SHEET NO. 2 OF 5 SHEETS | STA. 206+00.00 TO STA. 206+75.00

F.A.I. RTE.	SECTION	COUNTY	TOTAL SHEETS	SHEET NO.
70	D7 SAFETY 2009-1	FAYETTE	100	59
		CONTRACT NO. 74313		

FED. ROAD DIST. NO. | ILLINOIS | FED. AID PROJECT

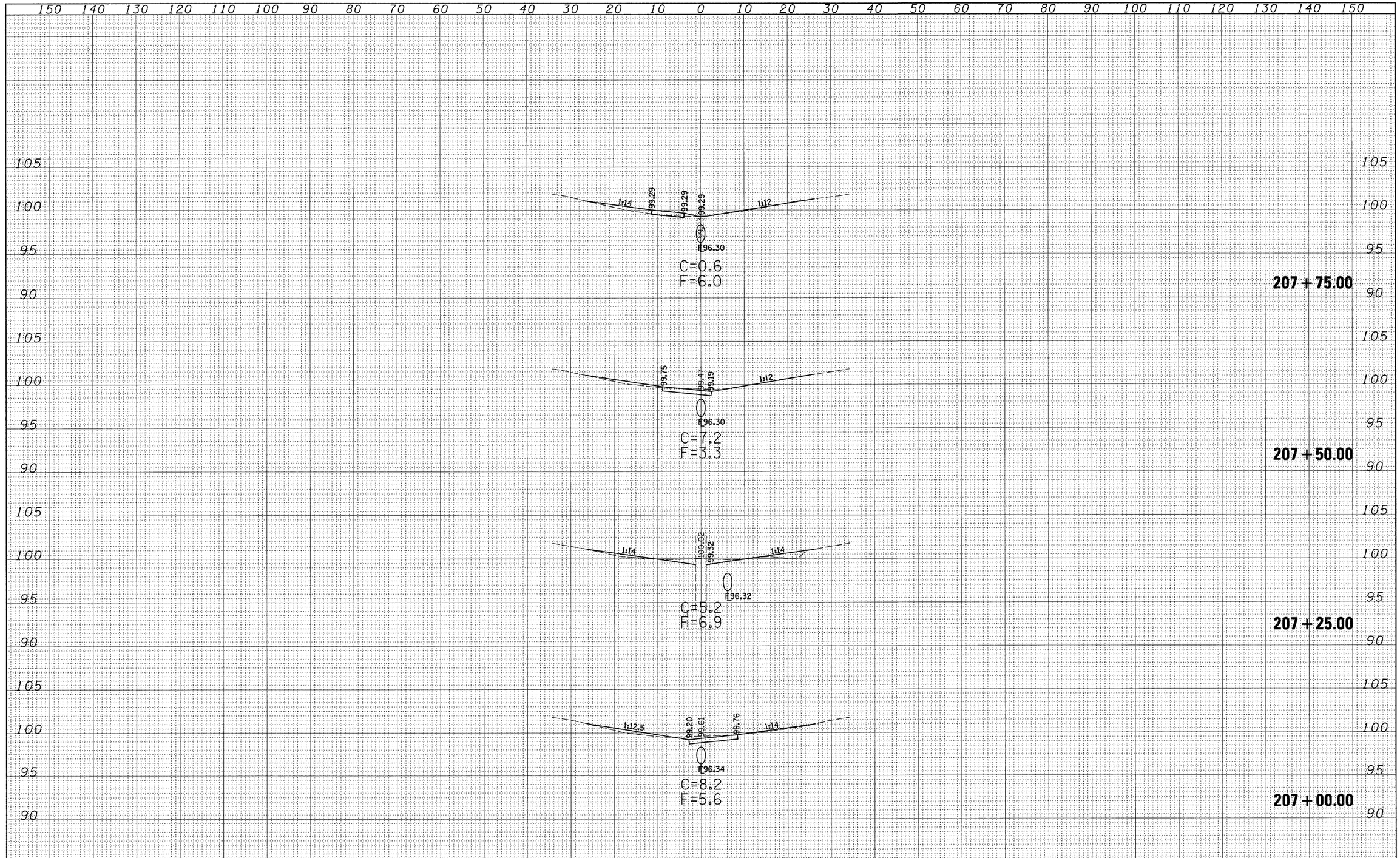

FINAL SURVEY	BY	DATE
SURVEYED		
PLOTTED		
TOPOGRAPHY		
NOTE BOOK		
NO.	AREAS CHECKED	

ORIGINAL SURVEY	BY	DATE
SURVEYED		
PLOTTED		
TOPOGRAPHY		
NOTE BOOK		
NO.	AREAS CHECKED	

FILE NAME = c:\pw_work\PWIDOT\DAVISONJL\dms36538\xs0074sheet_74313.dgn

USER NAME = davison_jl	DESIGNED - JLD	REVISED -	
	DRAWN - JLD	REVISED -	
PLOT SCALE = 10.0000 ' / IN.	CHECKED -	REVISED -	
PLOT DATE = 1/20/2009	DATE -	REVISED -	

STATE OF ILLINOIS
DEPARTMENT OF TRANSPORTATION

CROSS SECTIONS
S.N. 026-0074

SCALE: 10:5 | SHEET NO. 3 OF 5 SHEETS | STA. 207+00.00 TO STA. 207+75.00

F.A.I. RTE.	SECTION	COUNTY	TOTAL SHEETS	SHEET NO.
70	D7 SAFETY 2009-1	FAYETTE	100	60
		CONTRACT NO. 74313		

FED. ROAD DIST. NO. | ILLINOIS | FED. AID PROJECT

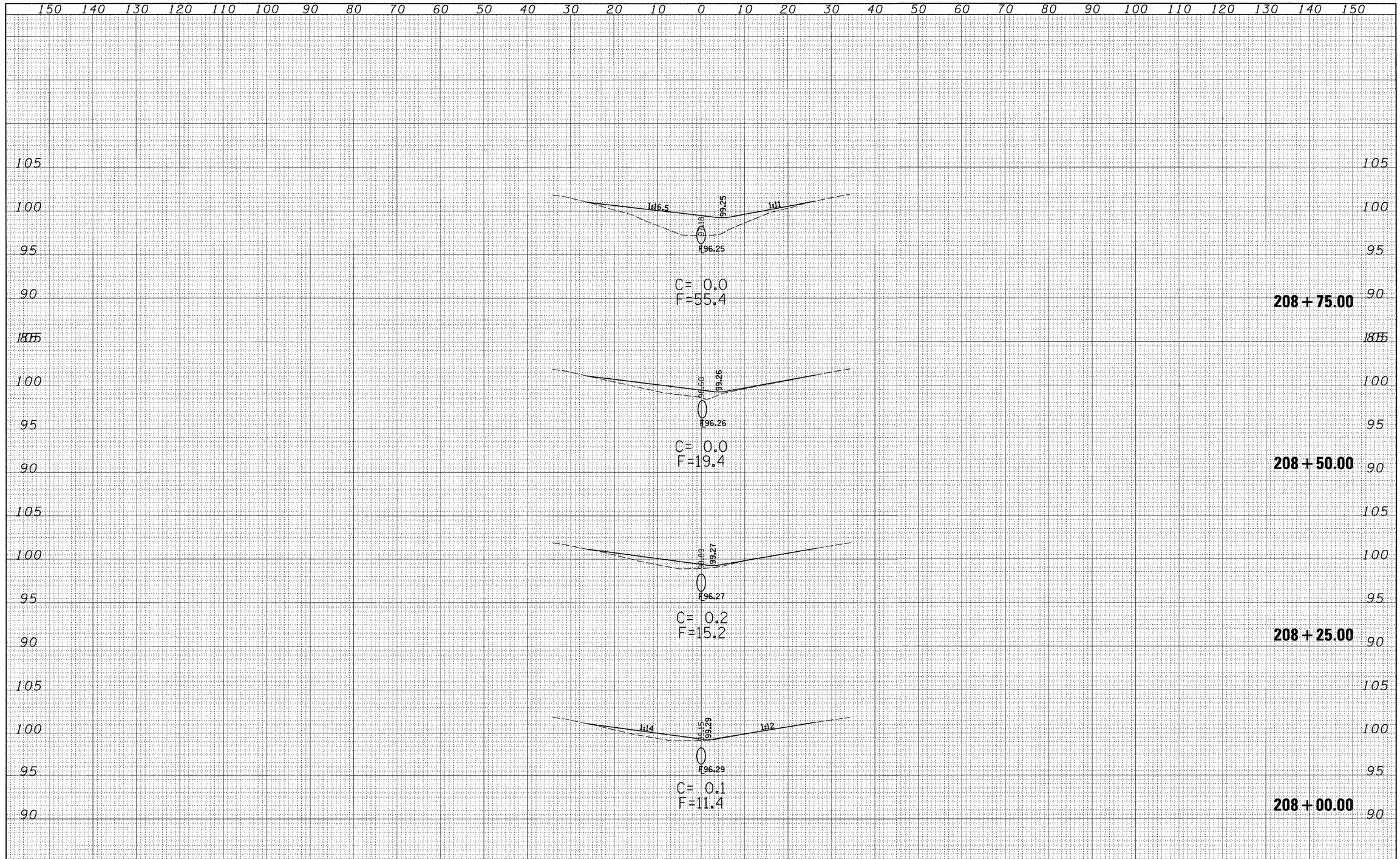

ORIGINAL SURVEY	BY	DATE
SURVEYED		
PLOTTED		
TEMPLATE		
AREAS		
AREAS CHECKED		
NOTE BOOK		
NO.		

FINAL SURVEY	BY	DATE
SURVEYED		
PLOTTED		
TEMPLATE		
AREAS		
AREAS CHECKED		
NOTE BOOK		
NO.		

FILE NAME = c:\pw_work\PWIDOT\DAVISONJL\dms36538\xs0074sheet_74313.dgn	USER NAME = davisonjl	DESIGNED - JLD	REVISED -
		DRAWN - JLD	REVISED -
	PLOT SCALE = 10.0000 ' / IN.	CHECKED -	REVISED -
	PLOT DATE = 1/20/2009	DATE -	REVISED -

STATE OF ILLINOIS
DEPARTMENT OF TRANSPORTATION

CROSS SECTIONS
S.N. 026-0074

SCALE: 10:5 | SHEET NO. 4 OF 5 SHEETS | STA. 208+00.00 TO STA. 208+75.00

F.A.I. RTE.	SECTION	COUNTY	TOTAL SHEETS	SHEET NO.
70	D7 SAFETY 2009-1	FAYETTE	100	61

CONTRACT NO. 74313

FED. ROAD DIST. NO. | ILLINOIS | FED. AID PROJECT

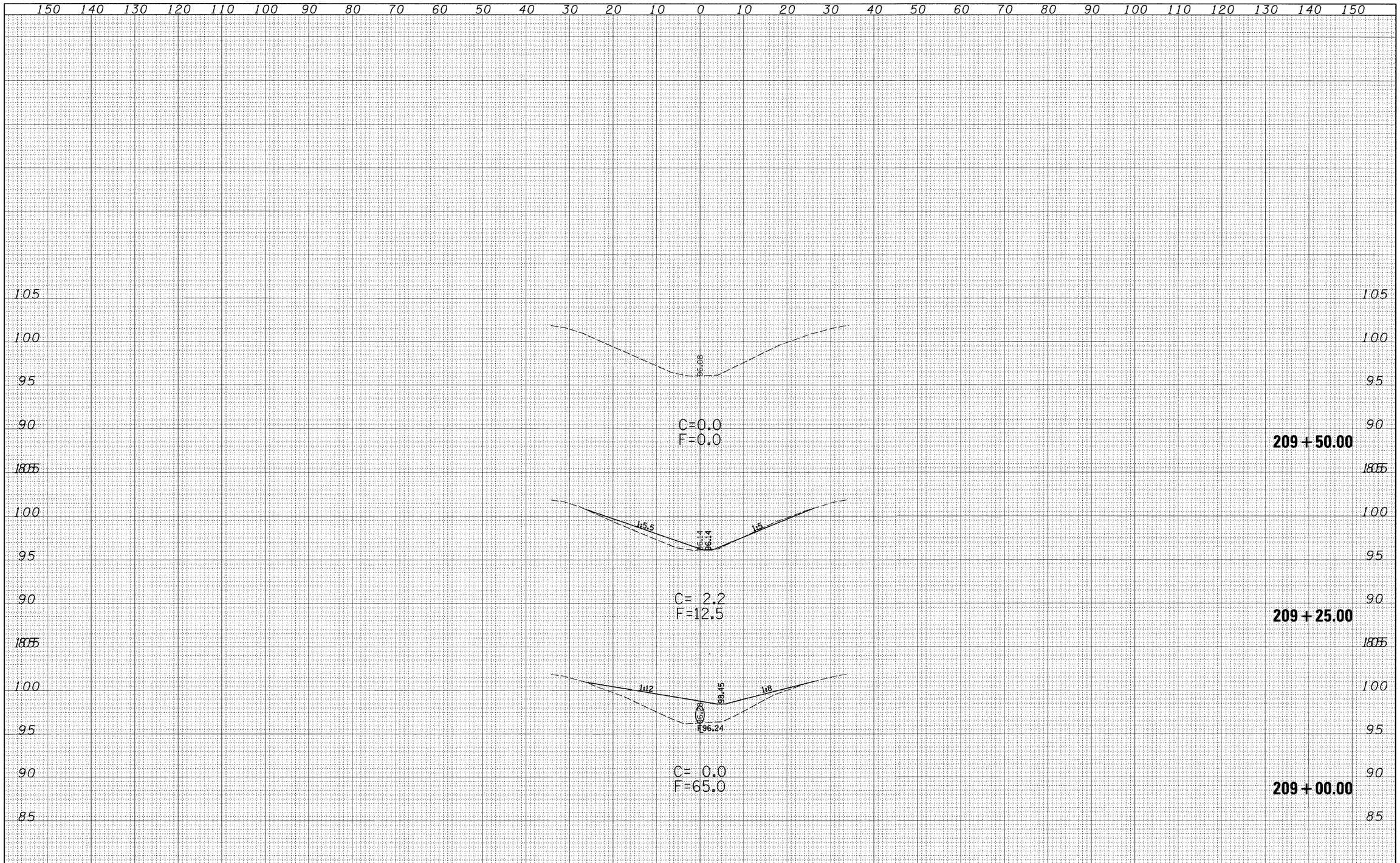

FINAL SURVEY		BY	DATE
NOTE BOOK NO.	SURVEYED		
	PLOTTED		
	TEMPLATE		
	AREAS		
	AREAS CHECKED		

ORIGINAL SURVEY		BY	DATE
NOTE BOOK NO.	SURVEYED		
	PLOTTED		
	TEMPLATE		
	AREAS		
	AREAS CHECKED		

FILE NAME = c:\pw_work\PWIDOT\DAVISONJL\dms36538\xs0074sheet_74313.dgn	USER NAME = davisonjl	DESIGNED - JLD	REVISED -
		DRAWN - JLD	REVISED -
	PLOT SCALE = 10.0000 ' / IN.	CHECKED -	REVISED -
	PLOT DATE = 1/20/2009	DATE -	REVISED -

STATE OF ILLINOIS
DEPARTMENT OF TRANSPORTATION

CROSS SECTIONS
S.N. 026-0074

SCALE: 10:5 | SHEET NO. 5 OF 5 SHEETS | STA. 209+00.00 TO STA. 209+50.00

F.A.I. RTE.	SECTION	COUNTY	TOTAL SHEETS	SHEET NO.
70	D7 SAFETY 2009-1	FAYETTE	100	62
		CONTRACT NO. 74313		

FED. ROAD DIST. NO. | ILLINOIS | FED. AID PROJECT

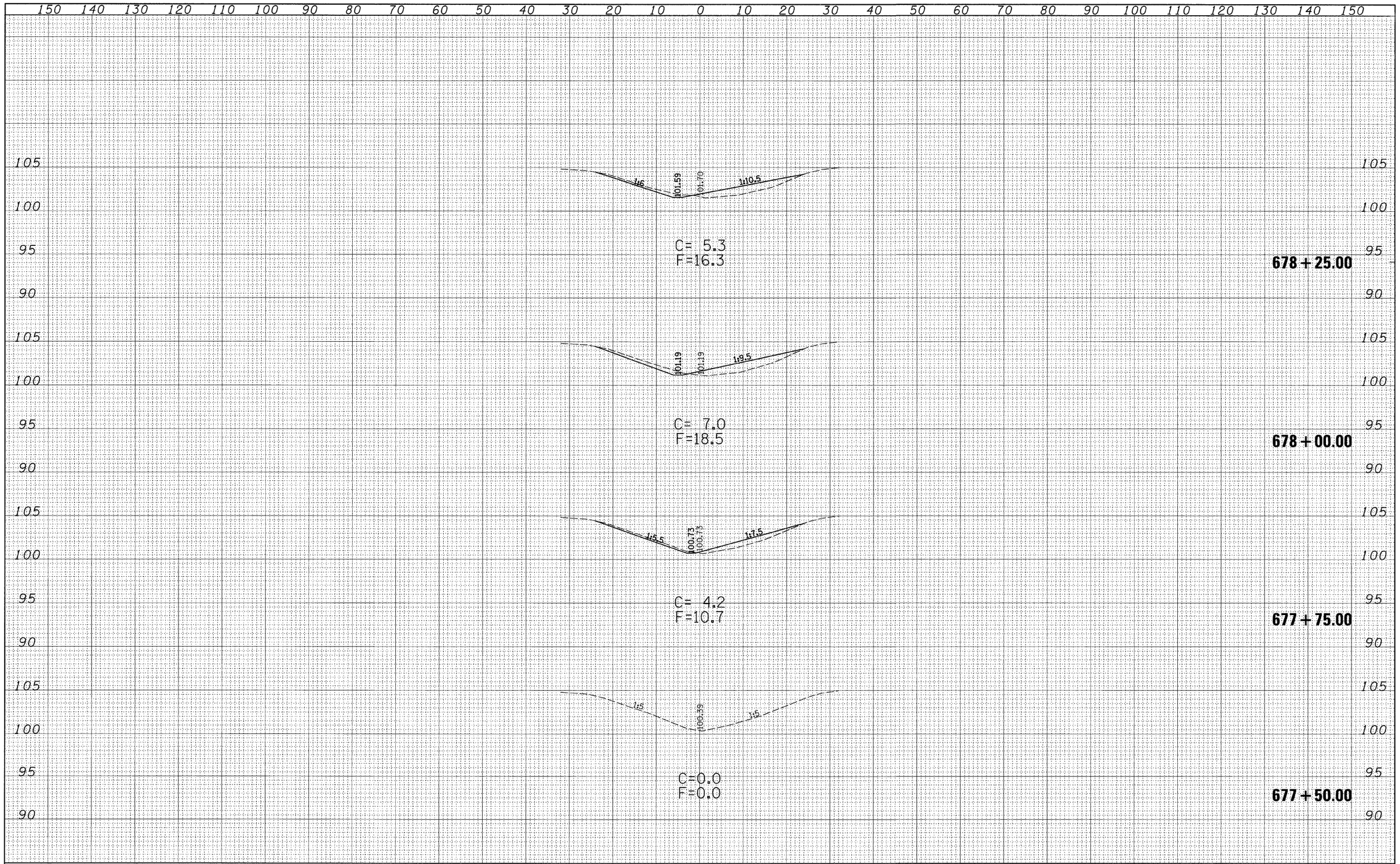

FINAL SURVEY		BY	DATE
NOTE BOOK	SURVEYED		
	PLOTTED		
	TEMPLATE		
	AREAS		
NO.	AREAS CHECKED		

ORIGINAL SURVEY		BY	DATE
NOTE BOOK	SURVEYED		
	PLOTTED		
	TEMPLATE		
	AREAS		
NO.	AREAS CHECKED		

FILE NAME = c:\pw_work\PWIDOT\DAVISONJL\dms36538\vs0075sheet_74313.dgn	USER NAME = davisonjl	DESIGNED - JLD	REVISED -
		DRAWN - JLD	REVISED -
	PLOT SCALE = 10.0000 ' / IN.	CHECKED -	REVISED -
	PLOT DATE = 1/20/2009	DATE -	REVISED -

STATE OF ILLINOIS
DEPARTMENT OF TRANSPORTATION

CROSS SECTIONS
S.N. 026-0075

SCALE: 10:5 | SHEET NO. 1 OF 5 SHEETS | STA. 677+50.00 TO STA. 678+25.00

F.A.I. RTE.	SECTION	COUNTY	TOTAL SHEETS	SHEET NO.
70	D7 SAFETY 2009-1	FAYETTE	100	63
		CONTRACT NO. 74313		

FED. ROAD DIST. NO. | ILLINOIS | FED. AID PROJECT

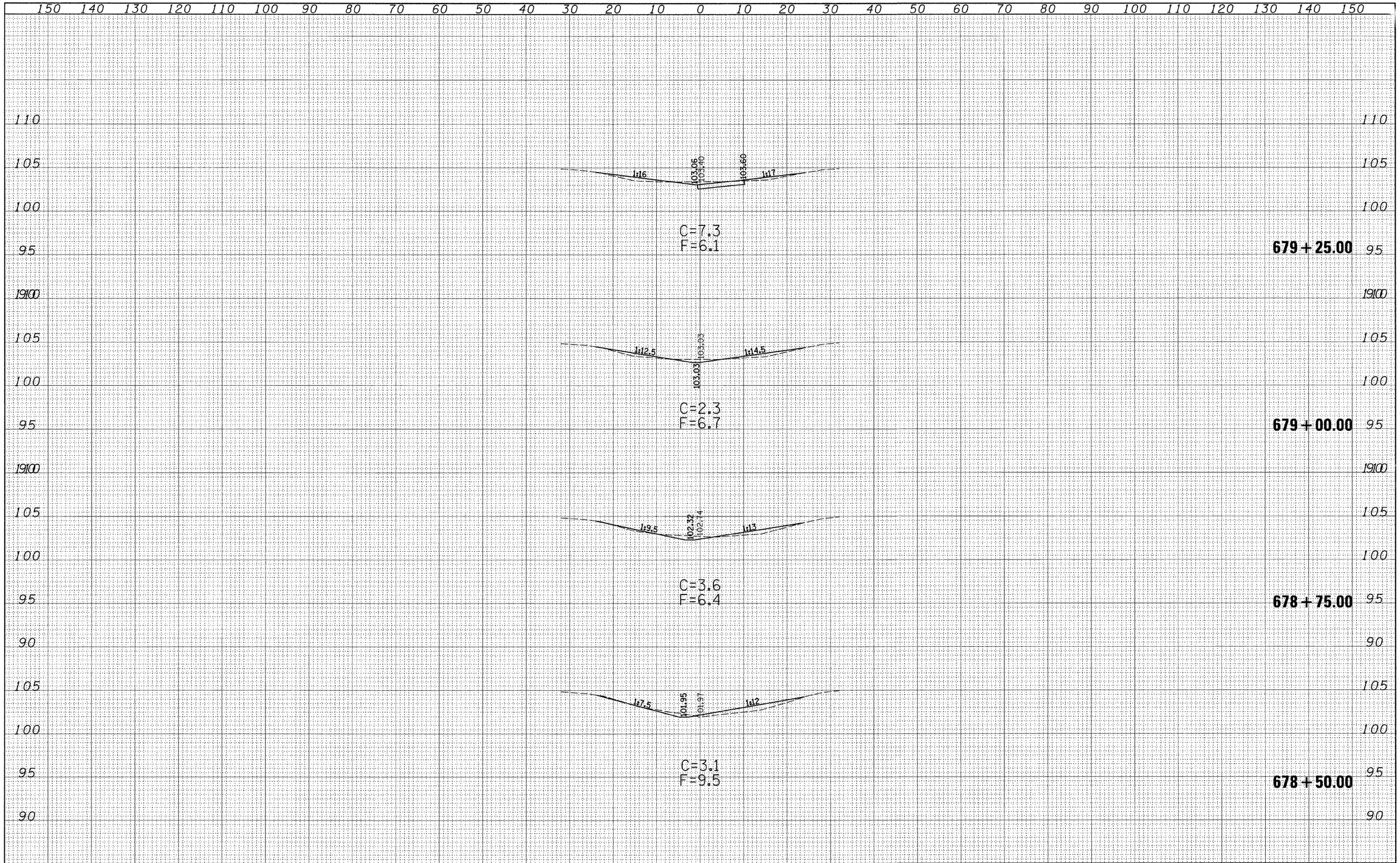

FINAL SURVEY	SURVEYED	PLOTTED	TOPOGRAPHY	AREAS	AREAS CHECKED	BY	DATE
NOTE BOOK NO.							

ORIGINAL SURVEY	SURVEYED	PLOTTED	TOPOGRAPHY	AREAS	AREAS CHECKED	BY	DATE
NOTE BOOK NO.							

FILE NAME = c:\pw_work\PWIDOT\DAVISONJL\dms36538\ss0075sheet_74313.dgn	USER NAME = davisonjl	DESIGNED - JLD	REVISED -	STATE OF ILLINOIS DEPARTMENT OF TRANSPORTATION	CROSS SECTIONS S.N. 026-0075
		DRAWN - JLD	REVISED -		
	PLOT SCALE = 10.0000 ' / IN.	CHECKED -	REVISED -		
	PLOT DATE = 1/20/2009	DATE -	REVISED -		

SCALE: 10:5 | SHEET NO. 2 OF 5 SHEETS | STA. 678+50.00 TO STA. 679+25.00

F.A.I. RTE.	SECTION	COUNTY	TOTAL SHEETS	SHEET NO.
70	D7 SAFETY 2009-1	FAYETTE	100	64
		CONTRACT NO. 74313		

FED. ROAD DIST. NO. | ILLINOIS | FED. AID PROJECT

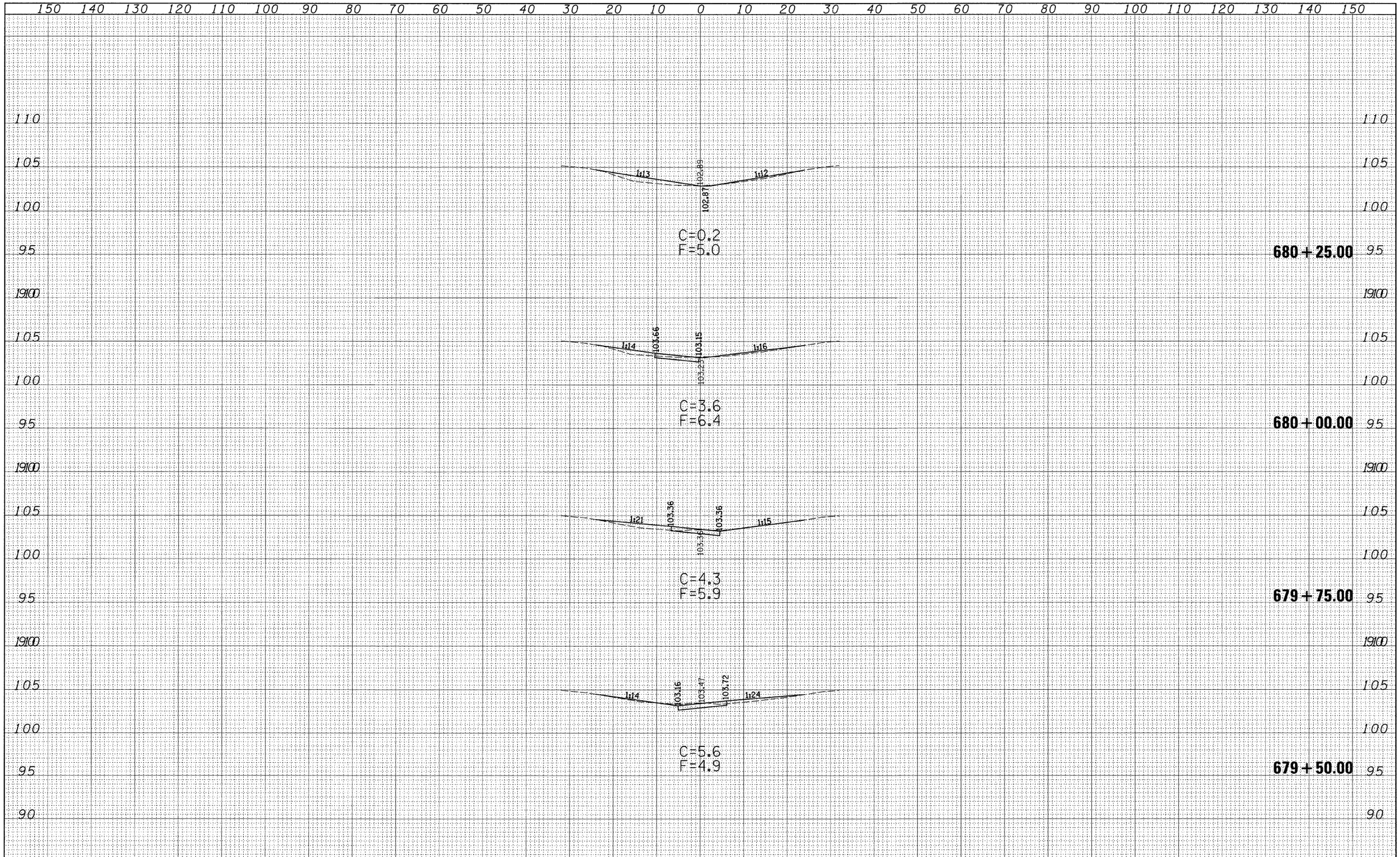

FILE NAME = c:\pw_work\PWIDOT\DAVISONJL\dms36538\xs0075sheet_74313.dgn	USER NAME = davisonjl	DESIGNED - JLD	REVISED -	STATE OF ILLINOIS DEPARTMENT OF TRANSPORTATION	CROSS SECTIONS S.N. 026-0075	F.A.I. RTE. 70	SECTION D7 SAFETY 2009-1	COUNTY FAYETTE	TOTAL SHEETS 100	SHEET NO. 65
		DRAWN - JLD	REVISED -					CONTRACT NO. 74313		
	PLOT SCALE = 10.0000 ' / IN.	CHECKED -	REVISED -							
	PLOT DATE = 1/20/2009	DATE -	REVISED -		SCALE: 1:5 / SHEET NO. 3 OF 5 SHEETS / STA. 679+50.00 TO STA. 680+25.00	FED. ROAD DIST. NO.	ILLINOIS	FED. AID PROJECT		

FINAL SURVEY — NOTE BOOK NO. — SURVEYED / PLOTTED / TEMPLATE / AREAS / AREAS CHECKED — BY — DATE

ORIGINAL SURVEY — NOTE BOOK NO. — SURVEYED / PLOTTED / TEMPLATE / AREAS / AREAS CHECKED — BY — DATE

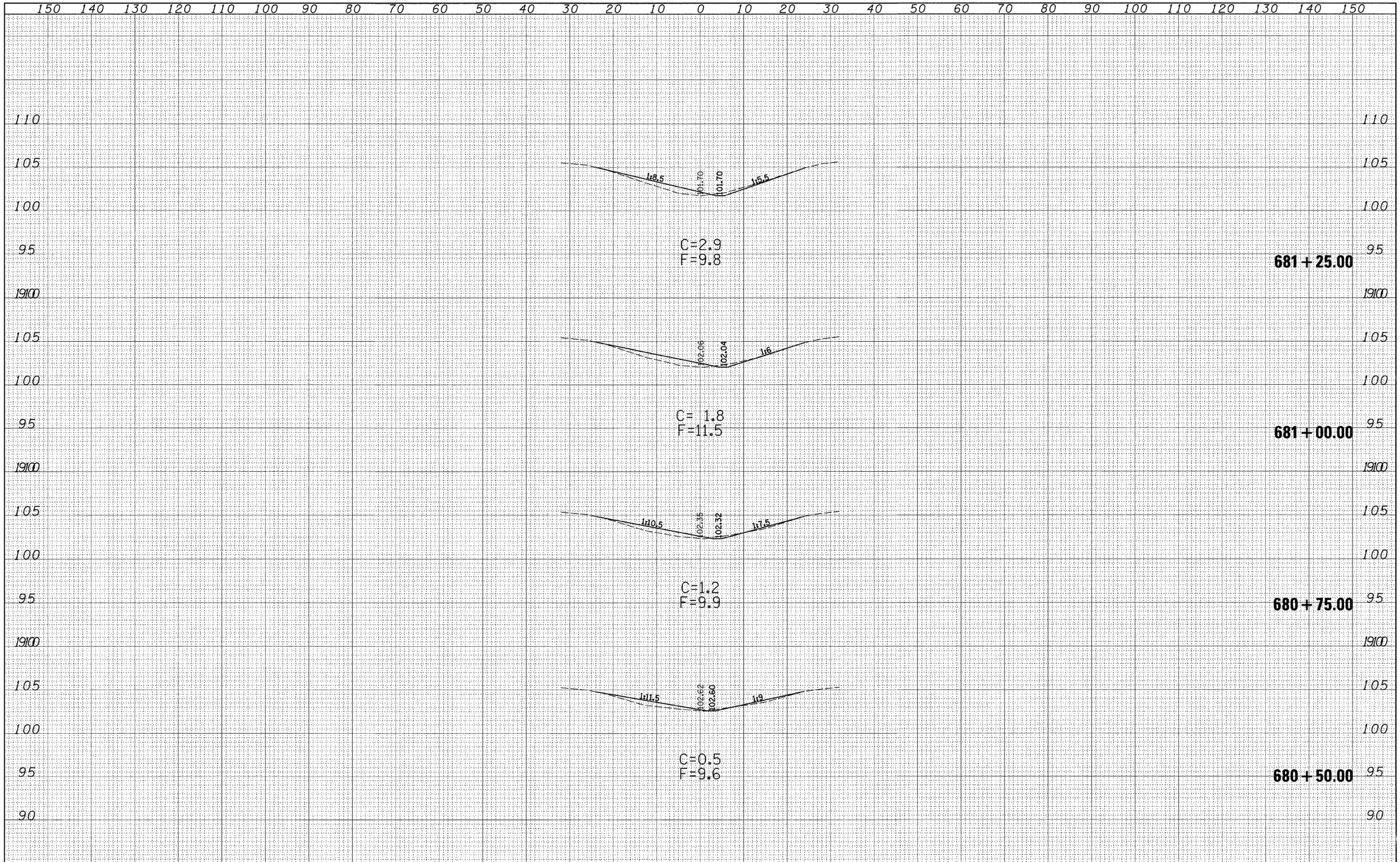

FINAL SURVEY	BY	DATE
SURVEYED		
PLOTTED		
TOPOGRAPHY		
NOTE BOOK		
NO.	AREAS CHECKED	

ORIGINAL SURVEY	BY	DATE
SURVEYED		
PLOTTED		
TOPOGRAPHY		
NOTE BOOK		
NO.	AREAS CHECKED	

FILE NAME = c:\pw_work\PWIDOT\DAVISONJL\dms36538\ss0075sheet_74313.dgn	USER NAME = davisonjl	DESIGNED - JLD	REVISED -
		DRAWN - JLD	REVISED -
	PLOT SCALE = 10.0000 ' / IN.	CHECKED -	REVISED -
	PLOT DATE = 1/20/2009	DATE -	REVISED -

STATE OF ILLINOIS
DEPARTMENT OF TRANSPORTATION

CROSS SECTIONS
S.N. 026-0075

SCALE: 10:5 | SHEET NO. 4 OF 5 SHEETS | STA. 680+50.00 TO STA. 681+25.00

F.A.I. RTE.	SECTION	COUNTY	TOTAL SHEETS	SHEET NO.
70	D7 SAFETY 2009-1	FAYETTE	100	66
		CONTRACT NO. 74313		
FED. ROAD DIST. NO.	ILLINOIS	FED. AID PROJECT		

FINAL SURVEY		BY	DATE
NOTE BOOK NO.	SURVEYED		
	PLOTTED		
	TEMPLATE		
	AREAS		
	AREAS CHECKED		

ORIGINAL SURVEY		BY	DATE
NOTE BOOK NO.	SURVEYED		
	PLOTTED		
	TEMPLATE		
	AREAS		
	AREAS CHECKED		

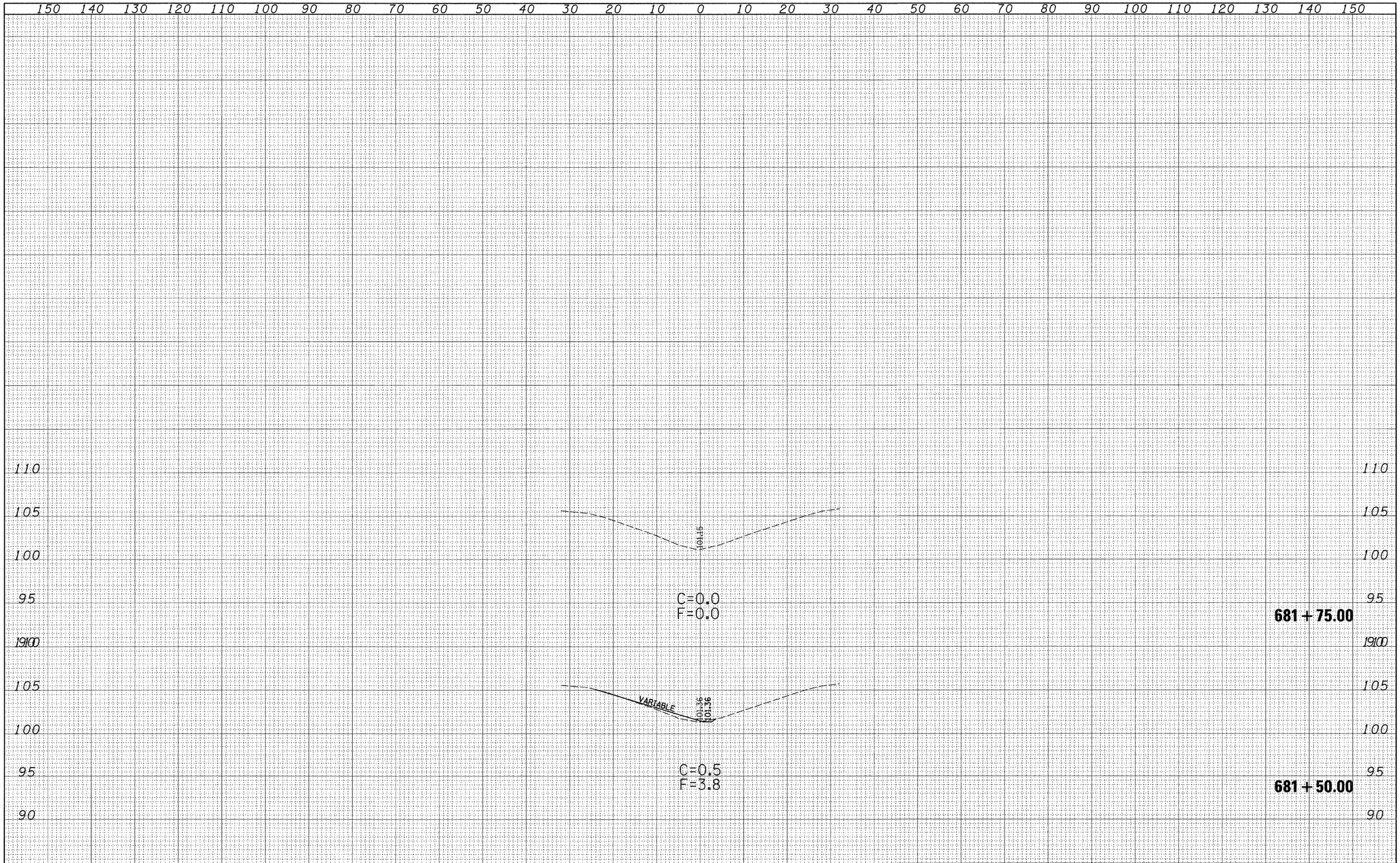

FILE NAME = c:\pw_work\PWIDOT\DAVISONJL\dms36538\s2075sheet_74313.dgn	USER NAME = davisonjl	DESIGNED - JLD	REVISED -
		DRAWN - JLD	REVISED -
	PLOT SCALE = 10.0000 ' / IN.	CHECKED -	REVISED -
	PLOT DATE = 1/20/2009	DATE -	REVISED -

STATE OF ILLINOIS
DEPARTMENT OF TRANSPORTATION

CROSS SECTIONS
S.N. 026-0075

SCALE: 10:5 | SHEET NO. 5 OF 5 SHEETS | STA. 681+50.00 TO STA. 681+75.00

F.A.I. RTE.	SECTION	COUNTY	TOTAL SHEETS	SHEET NO.
70	D7 SAFETY 2009-1	FAYETTE	100	67
		CONTRACT NO. 74313		

FED. ROAD DIST. NO. | ILLINOIS | FED. AID PROJECT

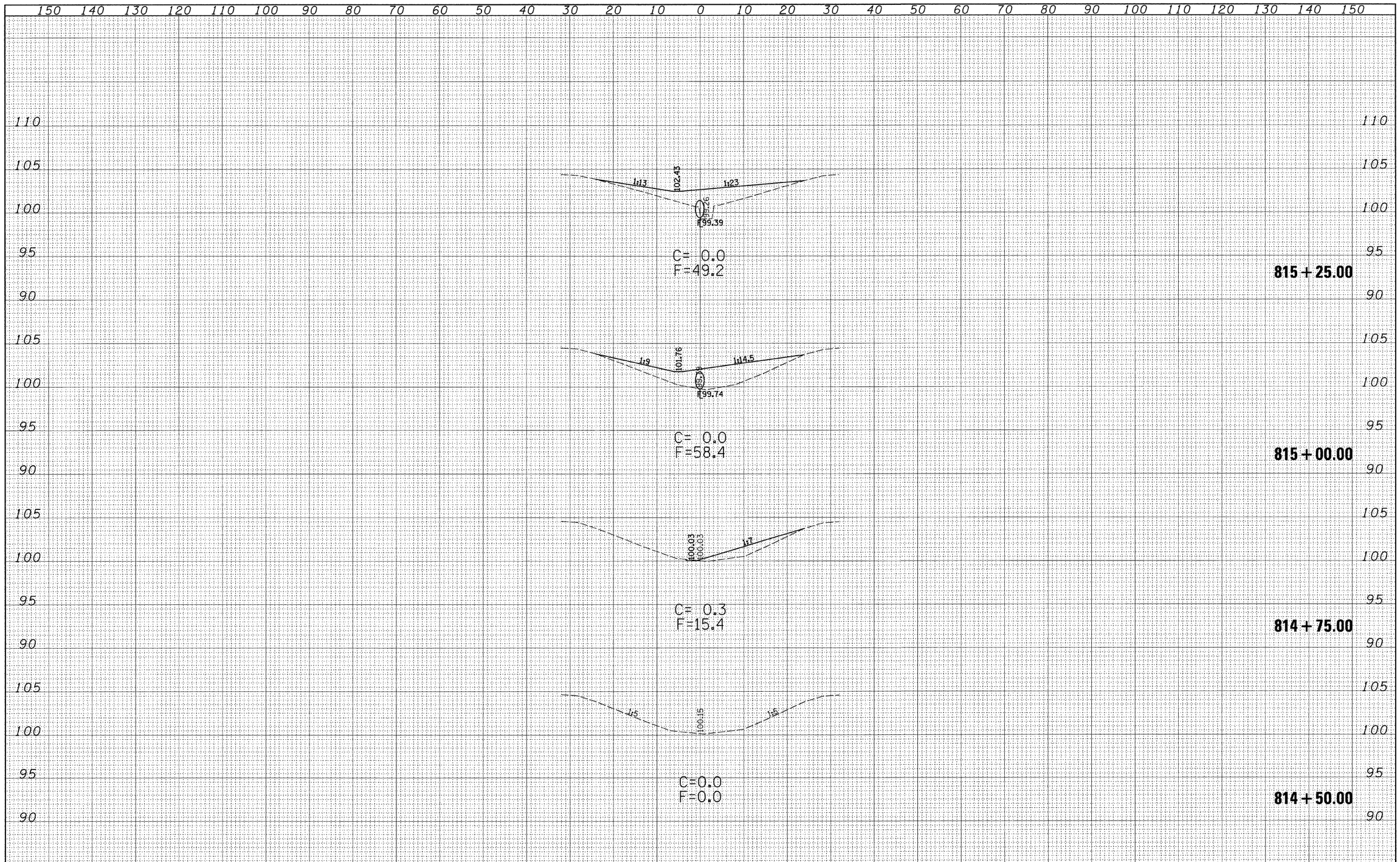

FINAL SURVEY	SURVEYED	BY	DATE
	PLOTTED		
NOTE BOOK	TEMPLATE		
	AREAS		
NO.	AREAS CHECKED		

ORIGINAL SURVEY	SURVEYED	BY	DATE
	PLOTTED		
NOTE BOOK	TEMPLATE		
	AREAS		
NO.	AREAS CHECKED		

FILE NAME = c:\pw_work\PWIDOT\DAVISONJL\dms36538\xs0076sheet_74313.dgn	USER NAME = davisonjl	DESIGNED - JLD	REVISED -
		DRAWN - JLD	REVISED -
	PLOT SCALE = 10.0000 ' / IN.	CHECKED -	REVISED -
	PLOT DATE = 1/20/2009	DATE -	REVISED -

STATE OF ILLINOIS
DEPARTMENT OF TRANSPORTATION

CROSS SECTIONS
S.N. 026-0076

SCALE: 10:5 | SHEET NO. 1 OF 5 SHEETS | STA. 814+50.00 TO STA. 815+25.00

F.A.I. RTE.	SECTION	COUNTY	TOTAL SHEETS	SHEET NO.
70	D7 SAFETY 2009-1	FAYETTE	100	68
		CONTRACT NO. 74313		
FED. ROAD DIST. NO.	ILLINOIS	FED. AID PROJECT		

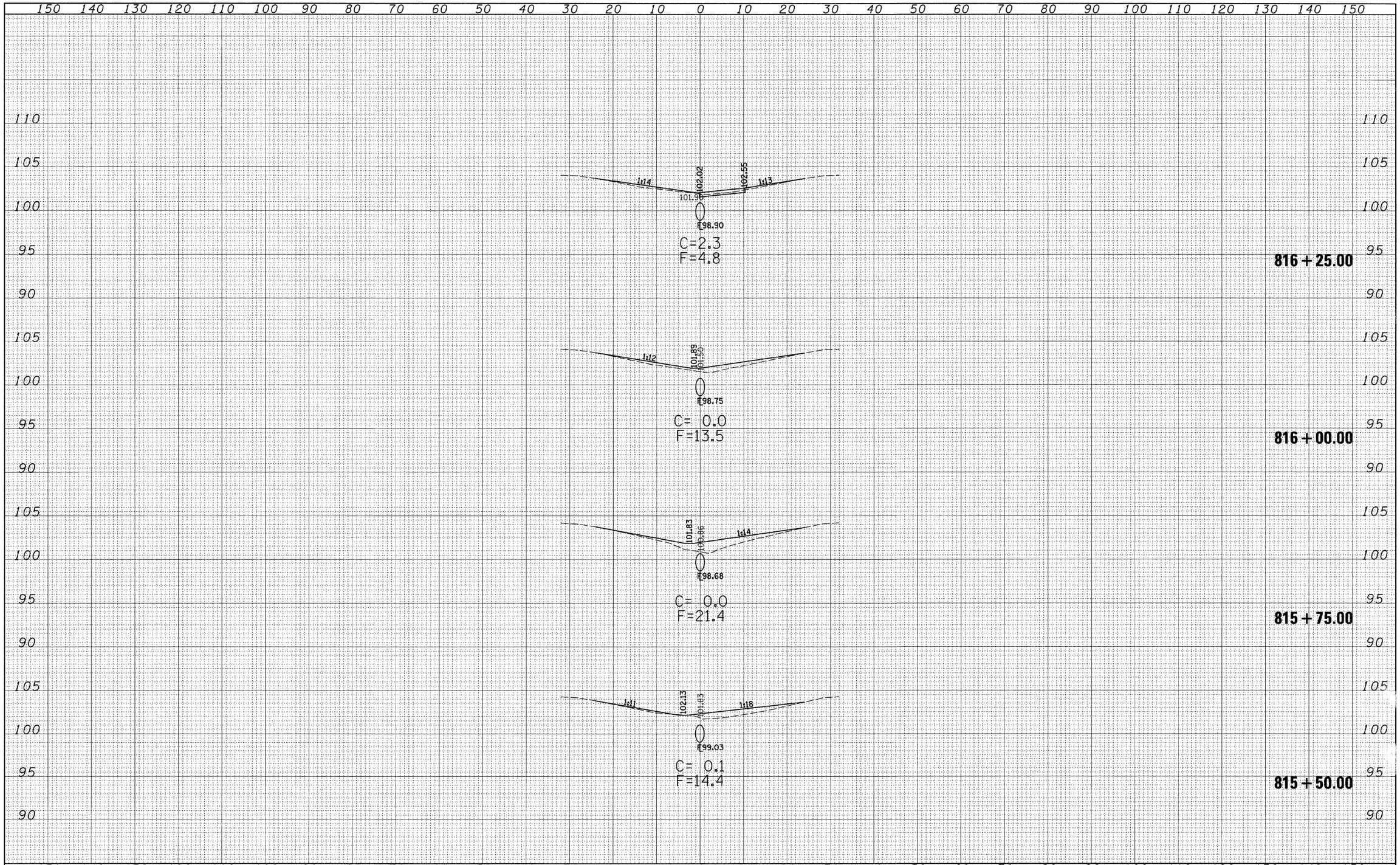

FINAL SURVEY		BY	DATE
NOTE BOOK	SURVEYED		
	PLOTTED		
	TEMPLATE		
	AREAS		
NO.	AREAS CHECKED		

ORIGINAL SURVEY		BY	DATE
NOTE BOOK	SURVEYED		
	PLOTTED		
	TEMPLATE		
	AREAS		
NO.	AREAS CHECKED		

FILE NAME = c:\pw_work\PWIDOT\DAVISONJL\dms36538\ss0076sheet_74313.dgn	USER NAME = davisonjl	DESIGNED - JLD	REVISED -
		DRAWN - JLD	REVISED -
	PLOT SCALE = 10.0000 ' / IN.	CHECKED -	REVISED -
	PLOT DATE = 1/22/2009	DATE -	REVISED -

STATE OF ILLINOIS
DEPARTMENT OF TRANSPORTATION

CROSS SECTIONS
S.N. 026-0076

SCALE: 10:5 | SHEET NO. 2 OF 5 SHEETS | STA. 815+50.00 TO STA. 816+25.00

F.A.I. RTE.	SECTION	COUNTY	TOTAL SHEETS	SHEET NO.
70	D7 SAFETY 2009-1	FAYETTE	100	69
		CONTRACT NO. 74313		

FED. ROAD DIST. NO. | ILLINOIS | FED. AID PROJECT

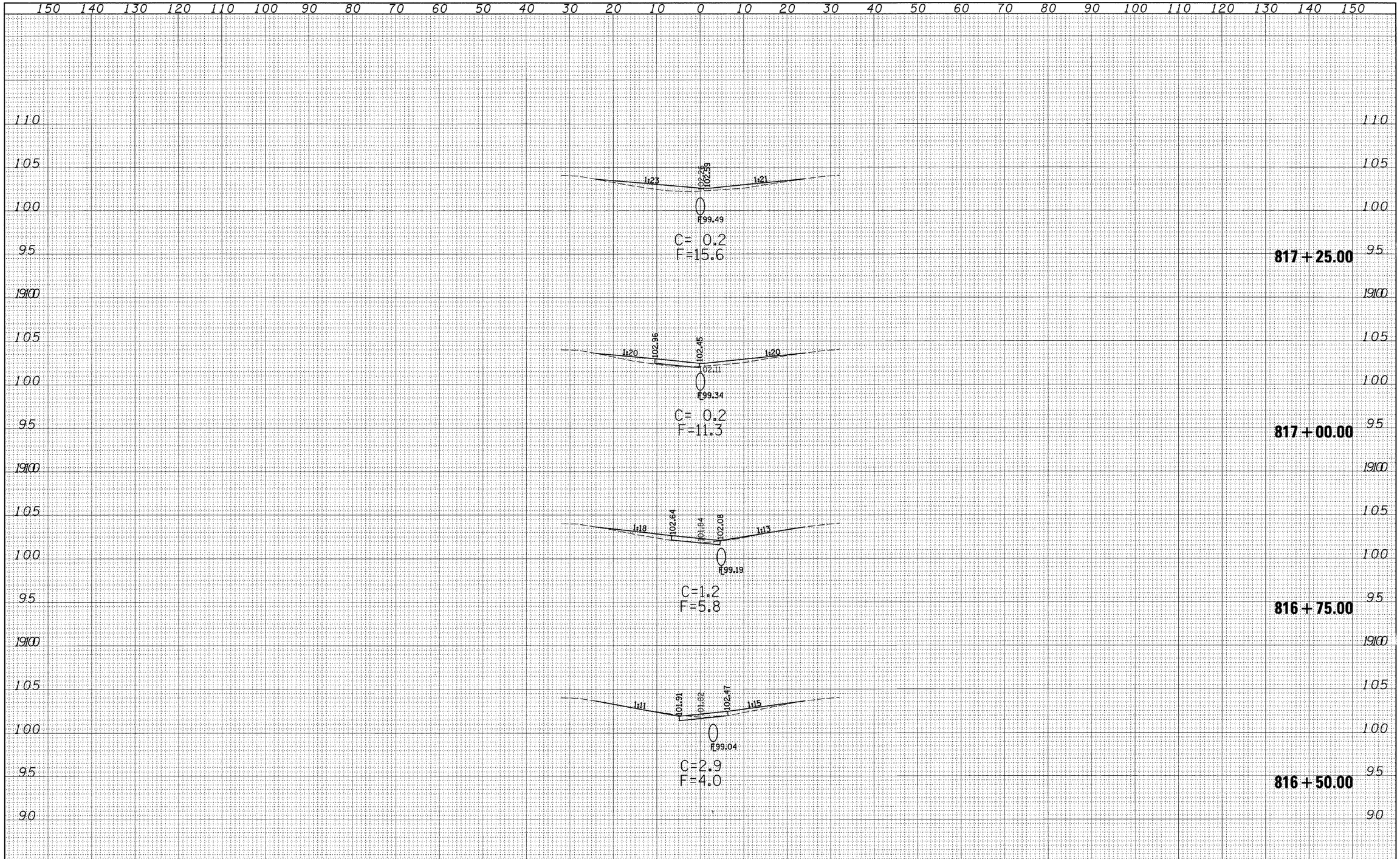

FINAL SURVEY		BY	DATE
NOTE BOOK	SURVEYED		
	PLOTTED		
	TEMPLATE		
	AREAS		
NO.	AREAS CHECKED		

ORIGINAL SURVEY		BY	DATE
NOTE BOOK	SURVEYED		
	PLOTTED		
	TEMPLATE		
	AREAS		
NO.	AREAS CHECKED		

FILE NAME = c:\pw_work\PWIDOT\DAVISONJL\dms36538\xs0076sheet_74313.dgn	USER NAME = davisonjl	DESIGNED - JLD	REVISED -
		DRAWN - JLD	REVISED -
	PLOT SCALE = 10.0000 ' / IN.	CHECKED -	REVISED -
	PLOT DATE = 1/20/2009	DATE -	REVISED -

STATE OF ILLINOIS
DEPARTMENT OF TRANSPORTATION

CROSS SECTIONS
S.N. 026-0076

SCALE: 10:5 | SHEET NO. 3 OF 5 SHEETS | STA. 816+50.00 TO STA. 817+25.00

F.A.I. RTE.	SECTION	COUNTY	TOTAL SHEETS	SHEET NO.
70	D7 SAFETY 2009-1	FAYETTE	100	70
		CONTRACT NO. 74313		
FED. ROAD DIST. NO.	ILLINOIS	FED. AID PROJECT		

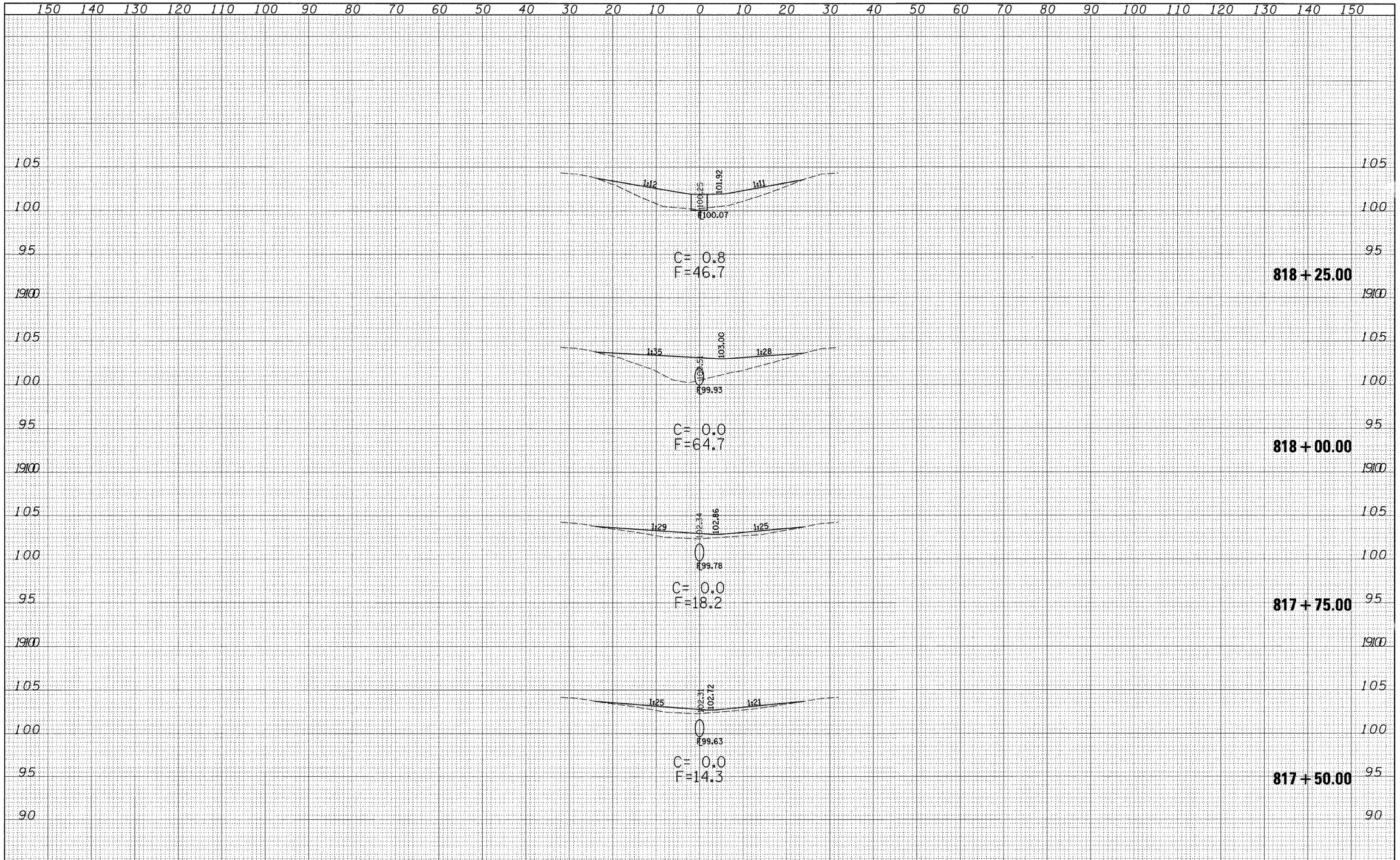

FILE NAME =	USER NAME = davisonjl	DESIGNED - JLD	REVISED -	STATE OF ILLINOIS DEPARTMENT OF TRANSPORTATION	CROSS SECTIONS S.N. 026-0076	F.A.I. RTE.	SECTION	COUNTY	TOTAL SHEETS	SHEET NO.
c:\pw_work\PWIDOT\DAVISONJL\dms36538\xs0076sheet_74313.dgn		DRAWN - JLD	REVISED -			70	D7 SAFETY 2009-1	FAYETTE	100	71
	PLOT SCALE = 10.0000 ' / IN.	CHECKED -	REVISED -					CONTRACT NO. 74313		
	PLOT DATE = 1/20/2009	DATE -	REVISED -		SCALE: 10:5 / SHEET NO. 4 OF 5 SHEETS / STA. 817+50.00 TO STA. 818+25.00	FED. ROAD DIST. NO.	ILLINOIS	FED. AID PROJECT		

FINAL SURVEY	BY	DATE
SURVEYED		
PLOTTED		
TOPO		
TOPO DATE		
NOTE BOOK		
NO.		
AREAS		
AREAS CHECKED		

ORIGINAL SURVEY	BY	DATE
SURVEYED		
PLOTTED		
TOPO		
TOPO DATE		
NOTE BOOK		
NO.		
AREAS		
AREAS CHECKED		

FINAL SURVEY		BY	DATE
NOTE BOOK NO.	SURVEYED		
	PLOTTED		
	TEMPLATE		
	AREAS		
	AREAS CHECKED		

ORIGINAL SURVEY		BY	DATE
NOTE BOOK NO.	SURVEYED		
	PLOTTED		
	TEMPLATE		
	AREAS		
	AREAS CHECKED		

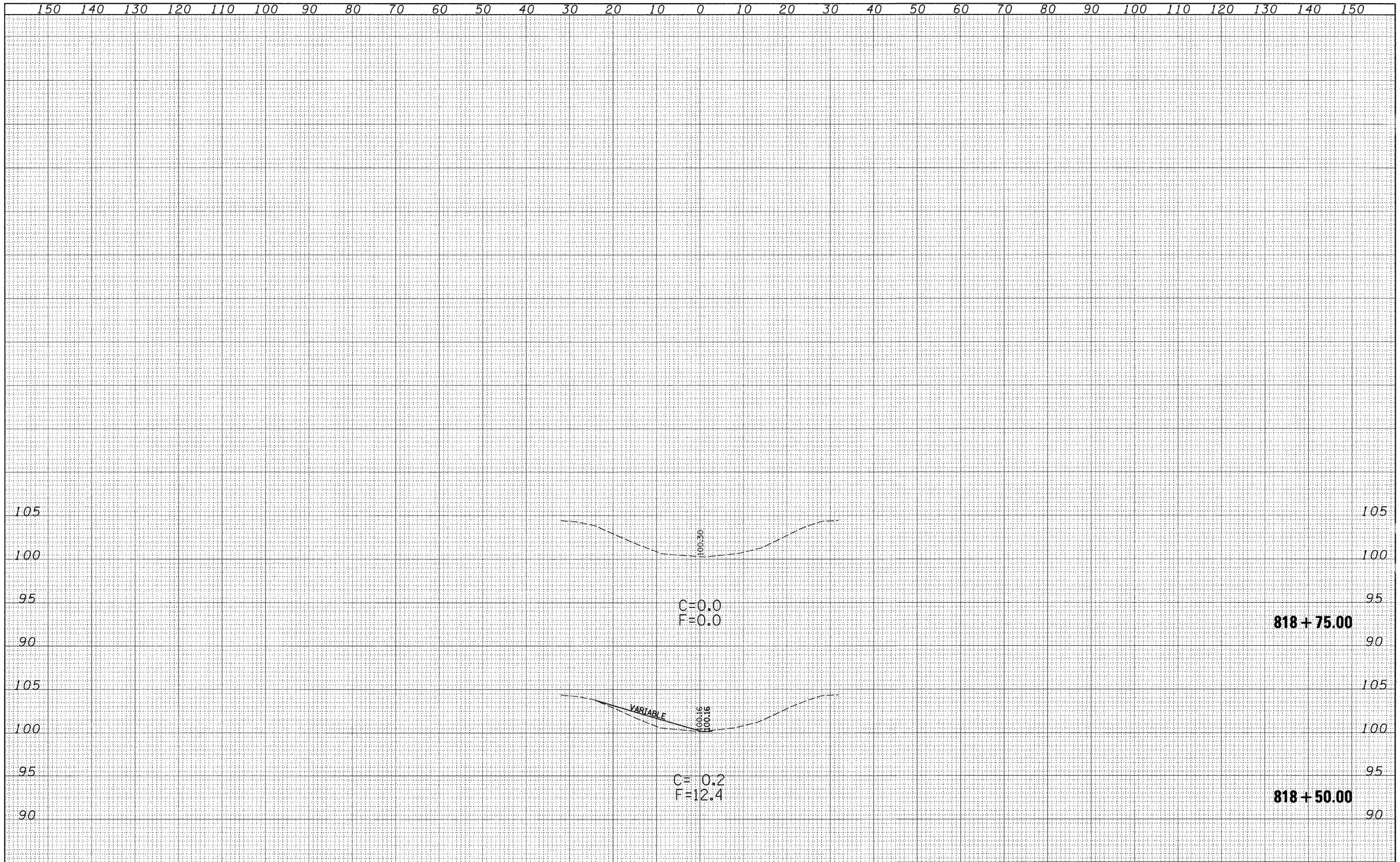

FILE NAME = c:\pw_work\PWIDOT\DAVISONJL\dms36538\xs0076sheet_74313.dgn	USER NAME = davisonjl	DESIGNED - JLD	REVISED -
		DRAWN - JLD	REVISED -
	PLOT SCALE = 10.0000 ' / IN.	CHECKED -	REVISED -
	PLOT DATE = 1/20/2009	DATE -	REVISED -

STATE OF ILLINOIS
DEPARTMENT OF TRANSPORTATION

CROSS SECTIONS
S.N. 026-0076

SCALE: 10:5 | SHEET NO. 5 OF 5 SHEETS | STA. 818+50.00 TO STA. 818+75.00

F.A.I. RTE.	SECTION	COUNTY	TOTAL SHEETS	SHEET NO.
70	D7 SAFETY 2009-1	FAYETTE	100	72
		CONTRACT NO. 74313		

FED. ROAD DIST. NO. | ILLINOIS | FED. AID PROJECT

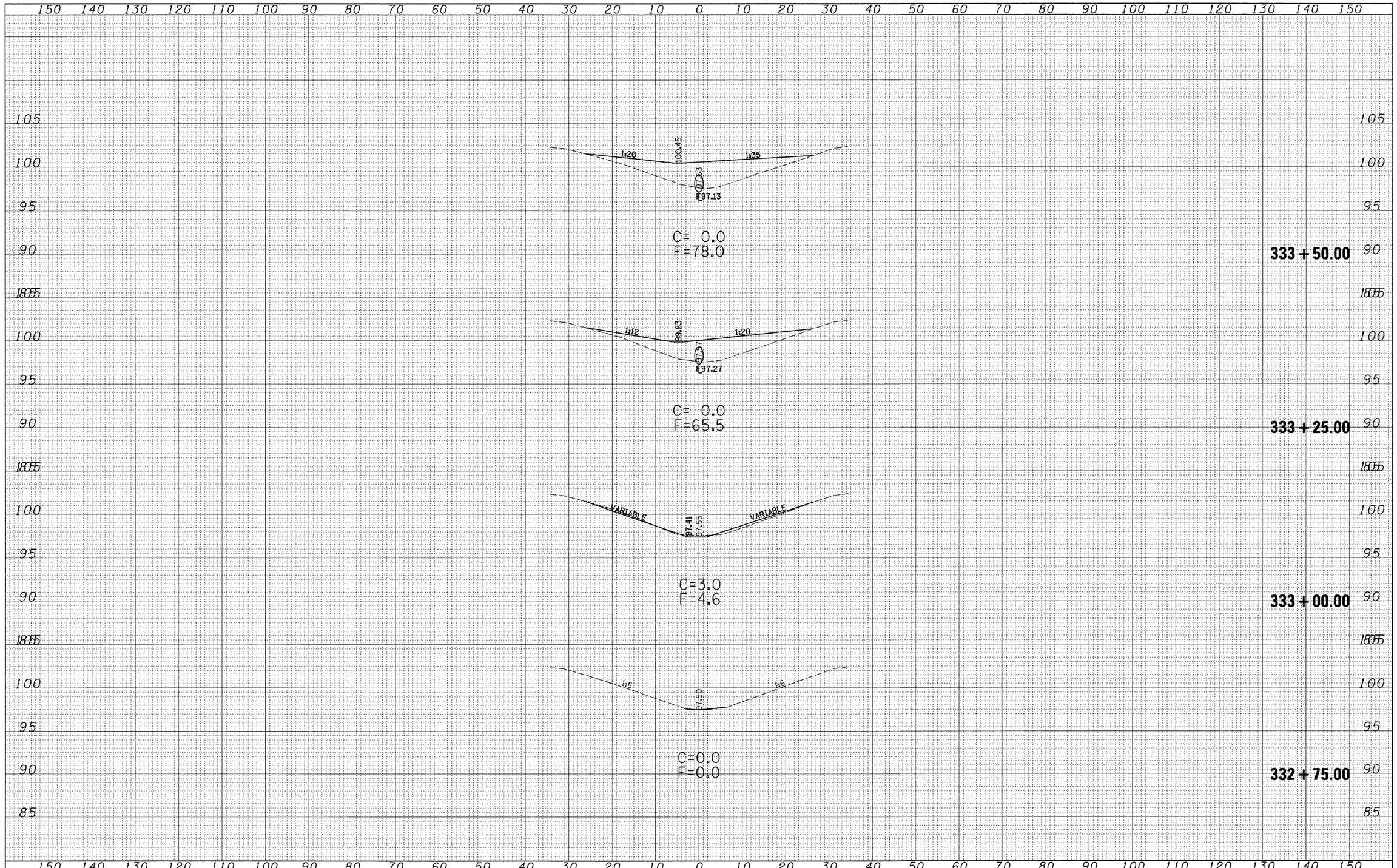

FINAL SURVEY	SURVEYED	BY	DATE
	PLOTTED		
NOTE BOOK	TEMPLATE		
NO.	AREAS		
	AREAS CHECKED		

ORIGINAL SURVEY	SURVEYED	BY	DATE
	PLOTTED		
NOTE BOOK	TEMPLATE		
NO.	AREAS		
	AREAS CHECKED		

FILE NAME = c:\pw_work\PWIDOT\DAVISONJL\dms36538\xs0077sheet_74313.dgn

USER NAME = davisonjl	DESIGNED - JLD	REVISED -
	DRAWN - JLD	REVISED -
PLOT SCALE = 10.0000 ' / IN.	CHECKED -	REVISED -
PLOT DATE = 1/20/2009	DATE -	REVISED -

STATE OF ILLINOIS
DEPARTMENT OF TRANSPORTATION

CROSS SECTIONS
S.N. 026-0077

SCALE: 10:5 | SHEET NO. 1 OF 5 SHEETS | STA. 332+75.00 TO STA. 333+50.00

F.A.I. RTE.	SECTION	COUNTY	TOTAL SHEETS	SHEET NO.
70	D7 2009-1	FAYETTE	100	73
		CONTRACT NO. 74313		

FED. ROAD DIST. NO. | ILLINOIS | FED. AID PROJECT

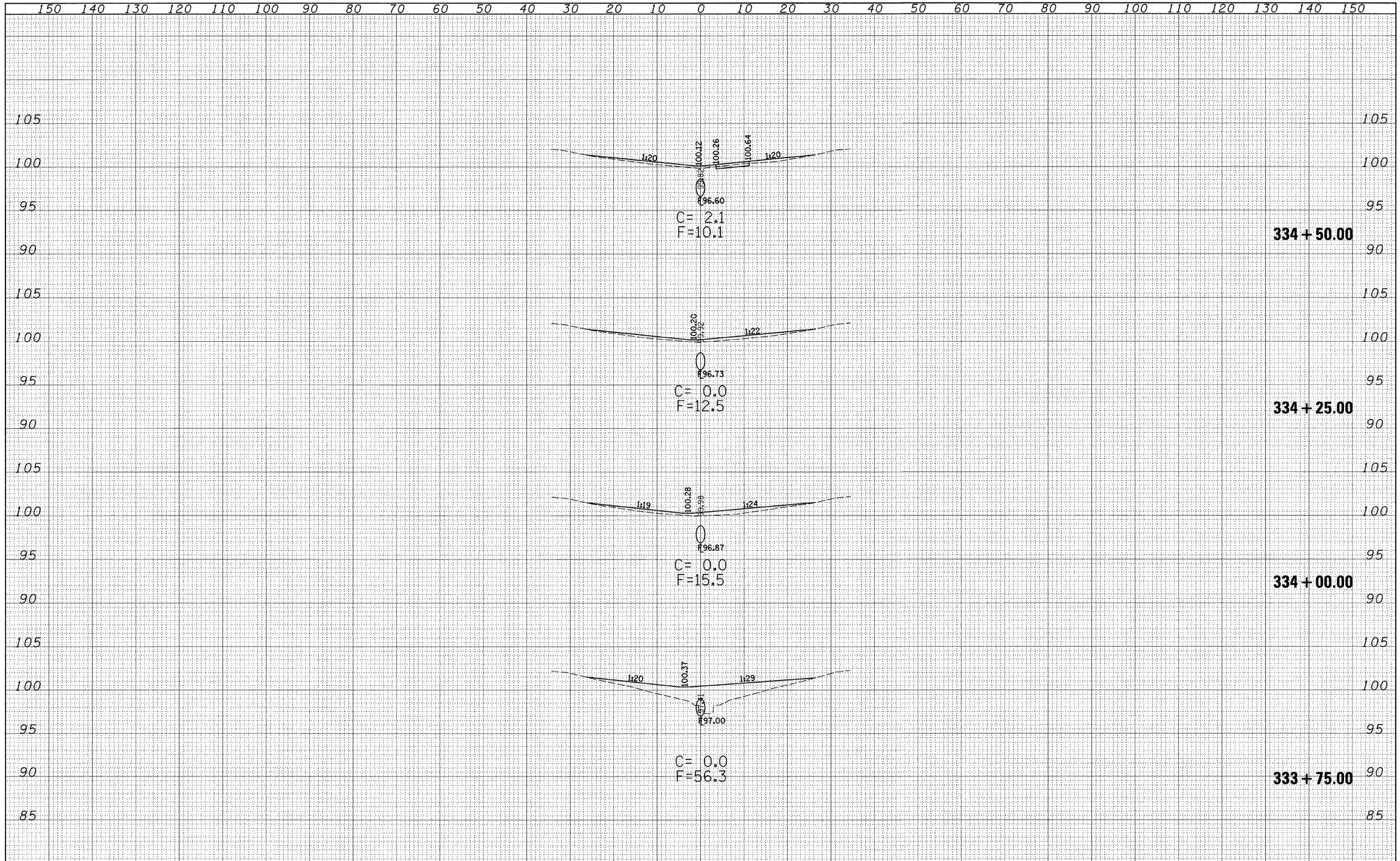

FINAL SURVEY	BY	DATE
SURVEYED		
PLOTTED		
NOTE BOOK TEMPLATE		
AREAS		
NO. AREAS CHECKED		

ORIGINAL SURVEY	BY	DATE
SURVEYED		
PLOTTED		
NOTE BOOK TEMPLATE		
AREAS		
NO. AREAS CHECKED		

FILE NAME = c:\pw_work\PWIDOT\DAVISONJL\dms36538\xs0077sheet74313.dgn	USER NAME = davisonjl	DESIGNED - JLD	REVISED -
		DRAWN - JLD	REVISED -
	PLOT SCALE = 10.0000 ' / IN.	CHECKED -	REVISED -
	PLOT DATE = 1/20/2009	DATE -	REVISED -

STATE OF ILLINOIS
DEPARTMENT OF TRANSPORTATION

CROSS SECTIONS
S.N. 026-0077

SCALE: 10:5 | SHEET NO. 2 OF 5 SHEETS | STA. 333+75.00 TO STA. 334+50.00

F.A.I. RTE.	SECTION	COUNTY	TOTAL SHEETS	SHEET NO.
70	D7 2009-1	FAYETTE	100	74
		CONTRACT NO. 74313		

FED. ROAD DIST. NO. | ILLINOIS | FED. AID PROJECT

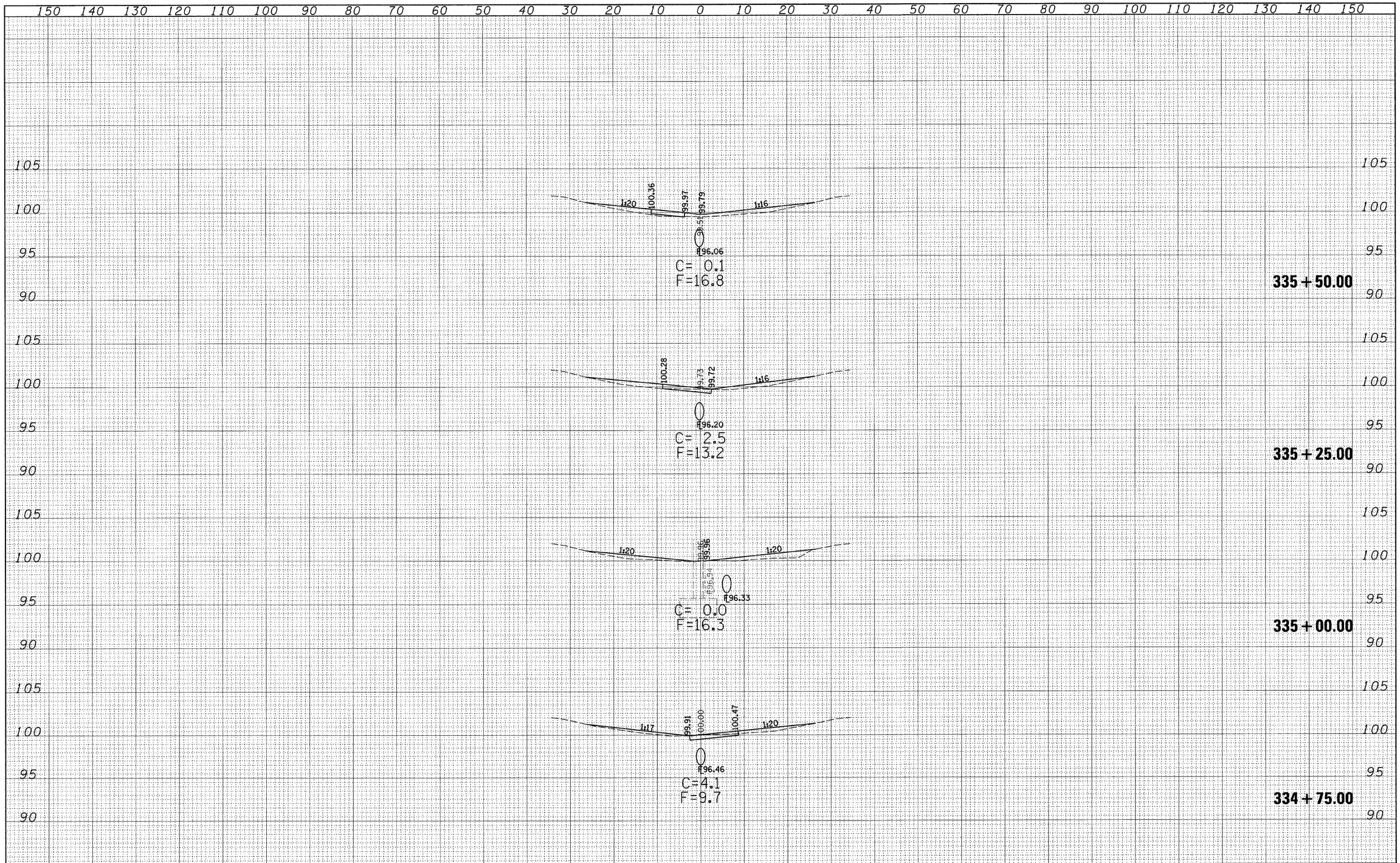

FINAL SURVEY	BY	DATE
SURVEYED		
PLOTTED		
TEMPLATE		
AREAS		
AREAS CHECKED		
NOTE BOOK		
NO.		

ORIGINAL SURVEY	BY	DATE
SURVEYED		
PLOTTED		
TEMPLATE		
AREAS		
AREAS CHECKED		
NOTE BOOK		
NO.		

FILE NAME = c:\pw_work\PWIDOT\DAVISONJL\dms36538\xs0077sheet_74313.dgn

USER NAME = davisonjl
PLOT SCALE = 10.0000 ' / IN.
PLOT DATE = 1/20/2009

DESIGNED - JLD
DRAWN - JLD
CHECKED -
DATE -

REVISED -
REVISED -
REVISED -
REVISED -

STATE OF ILLINOIS
DEPARTMENT OF TRANSPORTATION

CROSS SECTIONS
S.N. 026-0077

SCALE: 10:5 | SHEET NO. 3 OF 5 SHEETS | STA. 334+75.00 TO STA. 335+50.00

F.A.I. RTE.	SECTION	COUNTY	TOTAL SHEETS	SHEET NO.
70	D7 2009-1	FAYETTE	100	75
		CONTRACT NO. 74313		

FED. ROAD DIST. NO. | ILLINOIS | FED. AID PROJECT

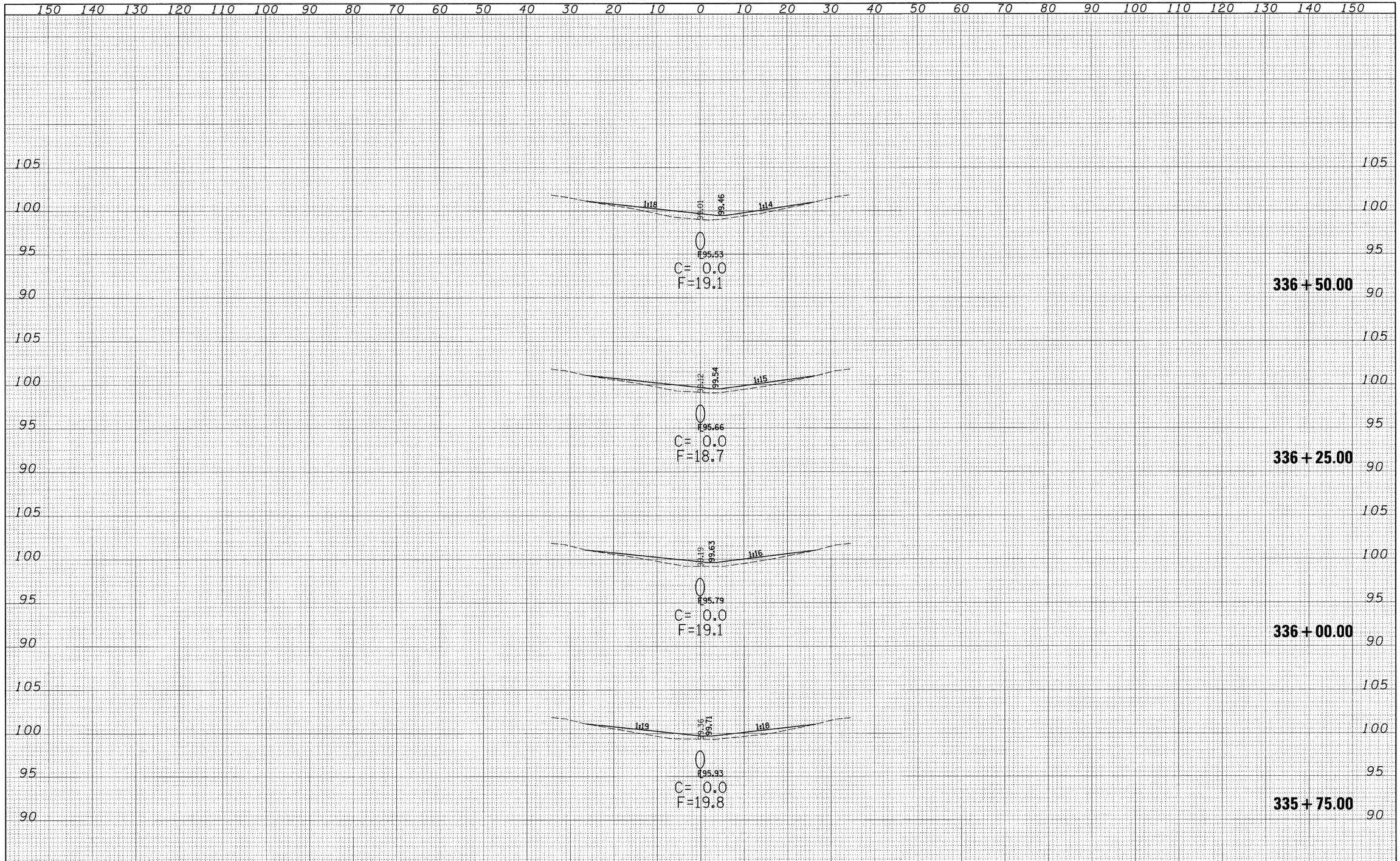

FINAL SURVEY	BY	DATE
SURVEYED		
PLOTTED		
TEMPLATE		
AREAS		
AREAS CHECKED		
NOTE BOOK		
NO.		

ORIGINAL SURVEY	BY	DATE
SURVEYED		
PLOTTED		
TEMPLATE		
AREAS		
AREAS CHECKED		
NOTE BOOK		
NO.		

FILE NAME = c:\pw_work\PWIDOT\DAVISONJL\dms36538\rs0077sheet_74313.dgn

USER NAME = davisonjl

PLOT SCALE = 10.0000 ' / IN.

PLOT DATE = 1/22/2009

DESIGNED - JLD	REVISED -
DRAWN - JLD	REVISED -
CHECKED -	REVISED -
DATE -	REVISED -

STATE OF ILLINOIS
DEPARTMENT OF TRANSPORTATION

CROSS SECTIONS
S.N. 026-0077

SCALE: 10:5 | SHEET NO. 4 OF 5 SHEETS | STA. 335+75.00 TO STA. 336+50.00

F.A.I. RTE.	SECTION	COUNTY	TOTAL SHEETS	SHEET NO.
70	D7 2009-1	FAYETTE	100	76
		CONTRACT NO. 74313		

FED. ROAD DIST. NO. | ILLINOIS | FED. AID PROJECT

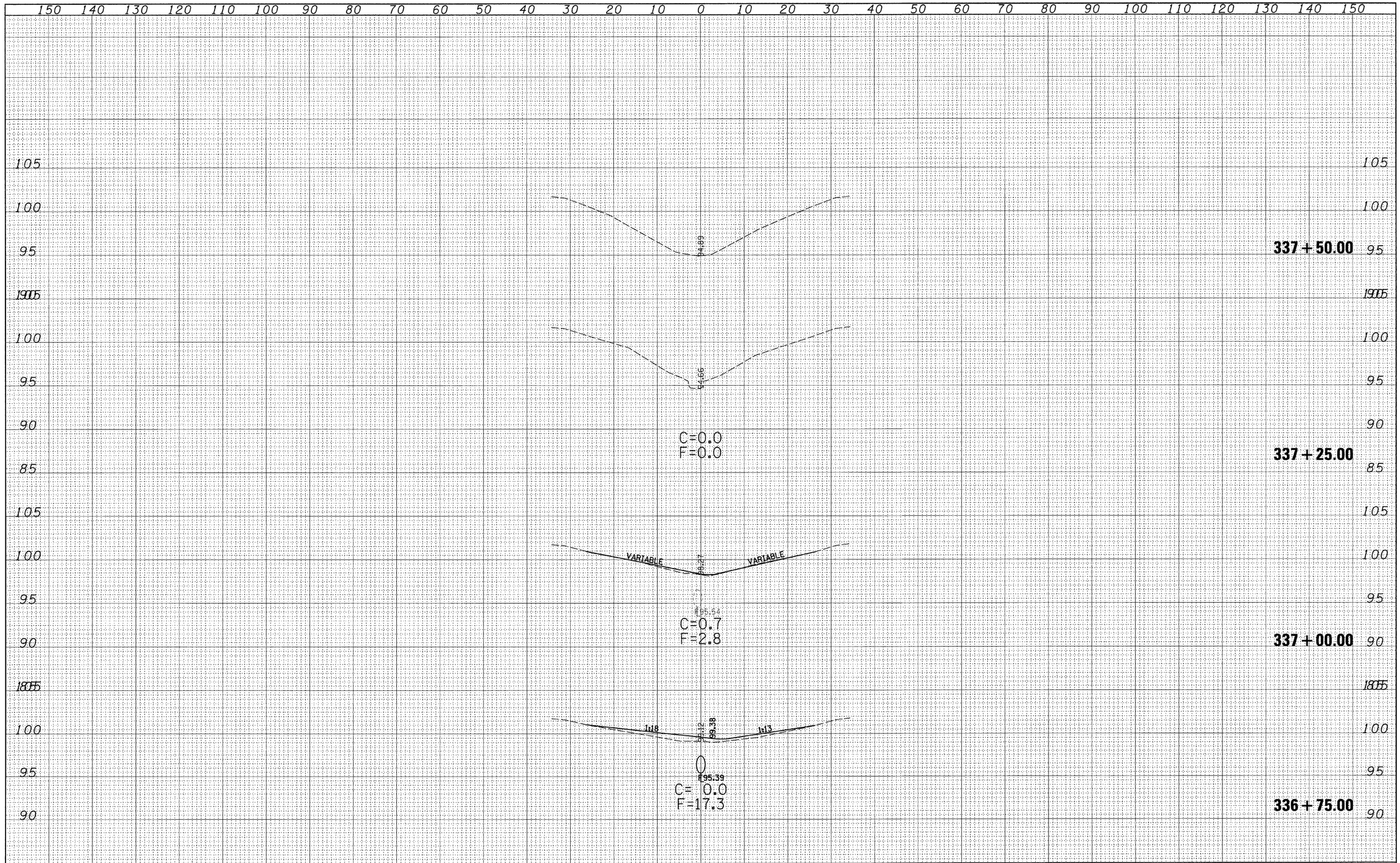

FINAL SURVEY		BY	DATE
NOTE BOOK	SURVEYED		
	PLOTTED		
	TEMPLATE		
	AREAS		
NO.	AREAS CHECKED		

ORIGINAL SURVEY		BY	DATE
NOTE BOOK	SURVEYED		
	PLOTTED		
	TEMPLATE		
	AREAS		
NO.	AREAS CHECKED		

FILE NAME = c:\pw_work\PWIDOT\DAVISONJL\dms36538\vs0077sheet_74313.dgn	USER NAME = davisonjl	DESIGNED - JLD	REVISED -
		DRAWN - JLD	REVISED -
	PLOT SCALE = 10.0000 ' / IN.	CHECKED -	REVISED -
	PLOT DATE = 1/20/2009	DATE -	REVISED -

STATE OF ILLINOIS
DEPARTMENT OF TRANSPORTATION

CROSS SECTIONS
S.N. 026-0077

SCALE: 10:5 | SHEET NO. 5 OF 5 SHEETS | STA. 336+75.00 TO STA. 337+50.00

F.A.I. RTE.	SECTION	COUNTY	TOTAL SHEETS	SHEET NO.
70	D7 2009-1	FAYETTE	100	77
		CONTRACT NO. 74313		

FED. ROAD DIST. NO. | ILLINOIS | FED. AID PROJECT

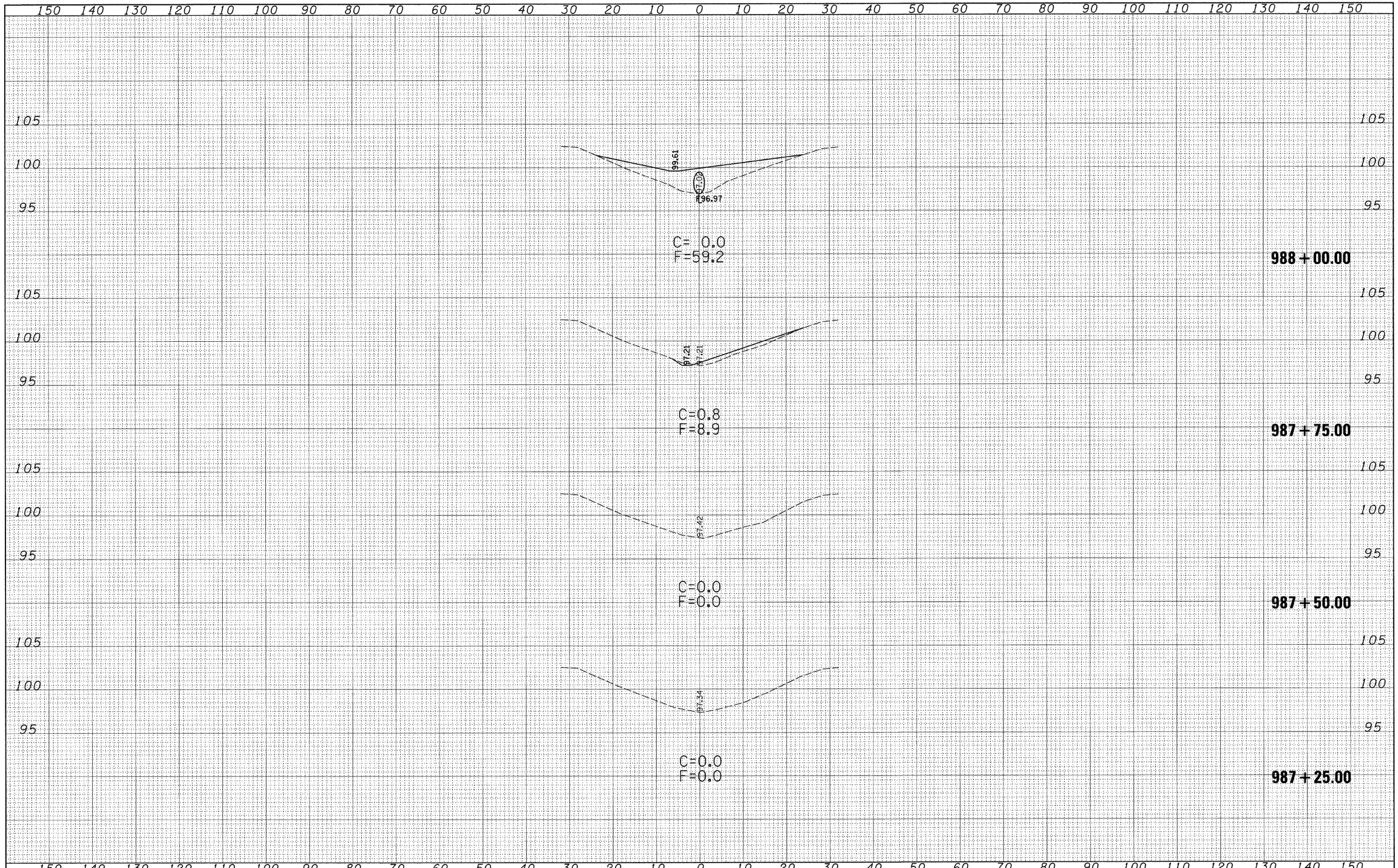

FINAL SURVEY	SURVEYED	BY	DATE
	SPOTTED		
NOTE BOOK	TEMPLATE		
NO.	AREAS		
	AREAS CHECKED		

ORIGINAL SURVEY	SURVEYED	BY	DATE
	SPOTTED		
NOTE BOOK	TEMPLATE		
NO.	AREAS		
	AREAS CHECKED		

FILE NAME = c:\pw_work\PWIDOT\DAVISONJL\dms36538\s0078sheet_74313.dgn	USER NAME = davisonjl	DESIGNED - JLD	REVISED -
		DRAWN - JLD	REVISED -
	PLOT SCALE = 10.0000 ' / IN.	CHECKED -	REVISED -
	PLOT DATE = 1/20/2009	DATE -	REVISED -

STATE OF ILLINOIS
DEPARTMENT OF TRANSPORTATION

CROSS SECTIONS
S.N. 026-0078

SCALE: 10:5 | SHEET NO. 1 OF 5 SHEETS | STA. 987+25.00 TO STA. 988+00.00

F.A.I. RTE.	SECTION	COUNTY	TOTAL SHEETS	SHEET NO.
70	D7 SAFETY 2009-1	FAYETTE	100	78
		CONTRACT NO. 74313		
FED. ROAD DIST. NO.	ILLINOIS	FED. AID PROJECT		

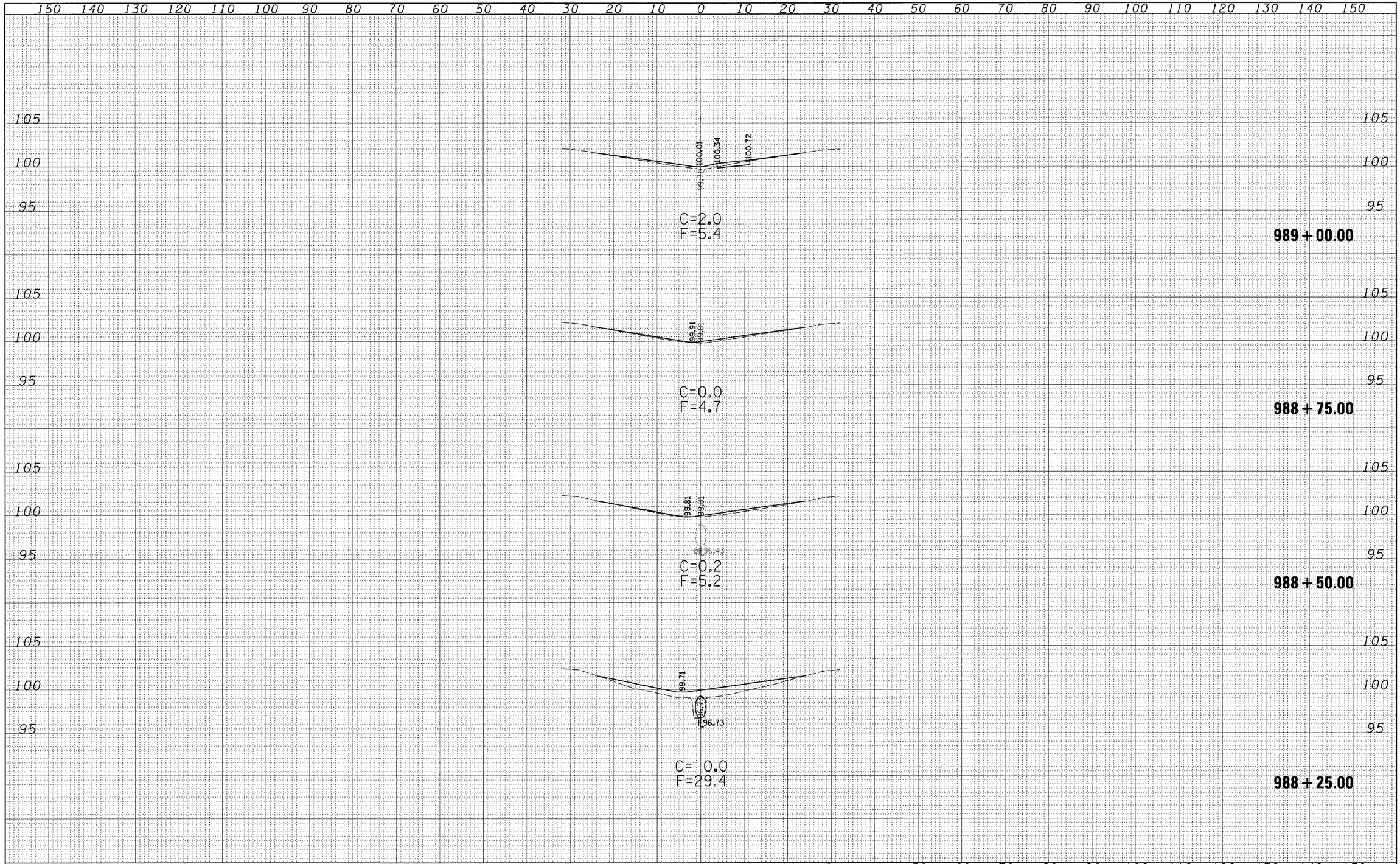

FINAL SURVEY		BY	DATE
	SURVEYED		
	PLOTTED		
NOTE BOOK	TEMPLATE		
	AREAS		
NO.	AREAS CHECKED		

ORIGINAL SURVEY		BY	DATE
	SURVEYED		
	PLOTTED		
NOTE BOOK	TEMPLATE		
	AREAS		
NO.	AREAS CHECKED		

FILE NAME = c:\pw_work\PWIDOT\DAVISONJL\dms36538\xs0078sheet_74313.dgn	USER NAME = davisonjl	DESIGNED - JLD	REVISED -
		DRAWN - JLD	REVISED -
	PLOT SCALE = 10.0000 ' / IN.	CHECKED -	REVISED -
	PLOT DATE = 1/20/2009	DATE -	REVISED -

STATE OF ILLINOIS
DEPARTMENT OF TRANSPORTATION

CROSS SECTIONS
S.N. 026-0078

SCALE: 10:5 | SHEET NO. 2 OF 5 SHEETS | STA. 988+25.00 TO STA. 989+00.00

F.A.I. RTE.	SECTION	COUNTY	TOTAL SHEETS	SHEET NO.
70	D7 SAFETY 2009-1	FAYETTE	100	79
		CONTRACT NO. 74313		

FED. ROAD DIST. NO. | ILLINOIS | FED. AID PROJECT

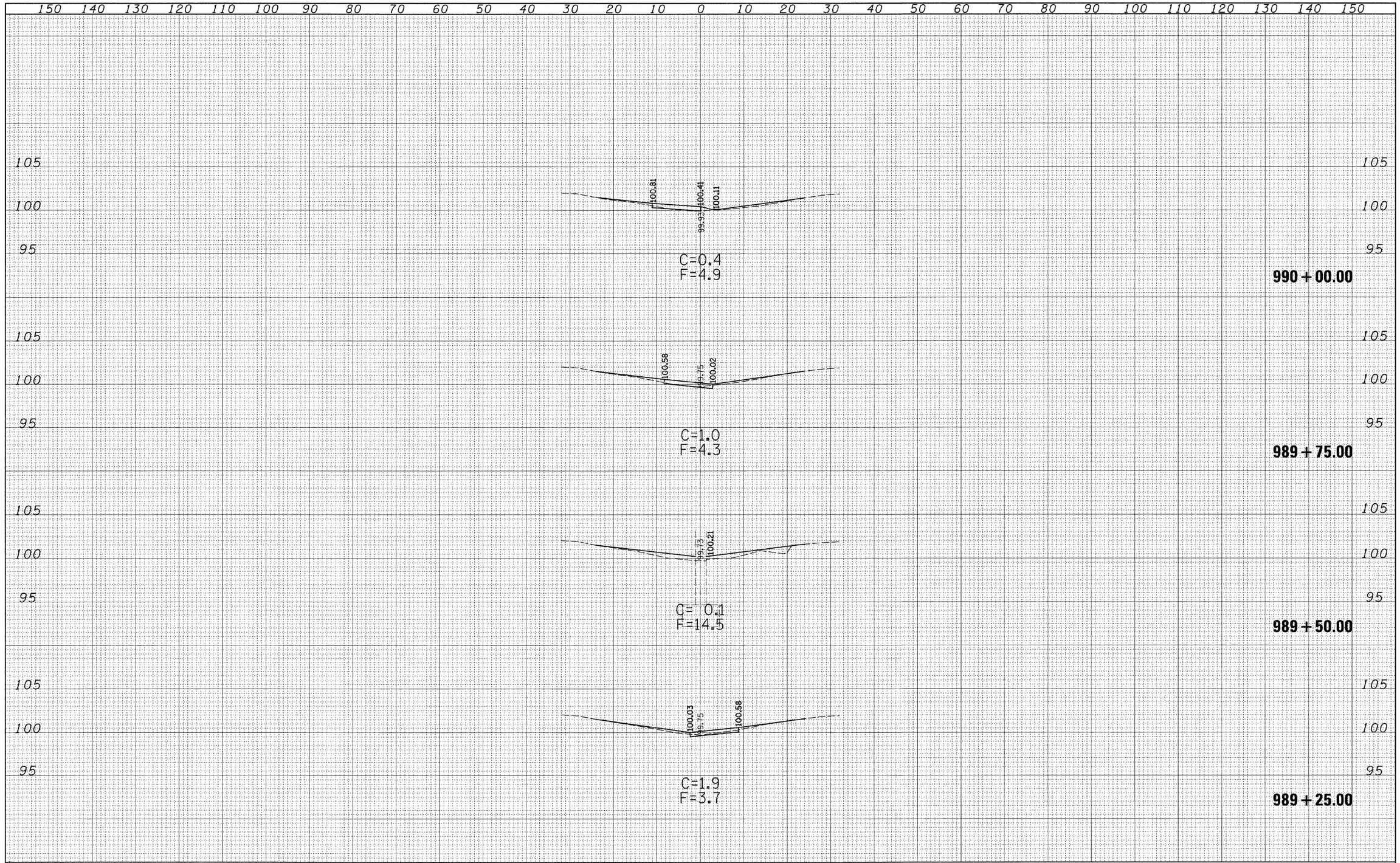

FINAL SURVEY		BY	DATE
	SURVEYED		
	PLOTTED		
NOTE BOOK	TEMPLATE		
	AREAS		
NO.	AREAS CHECKED		

ORIGINAL SURVEY		BY	DATE
	SURVEYED		
	PLOTTED		
NOTE BOOK	TEMPLATE		
	AREAS		
NO.	AREAS CHECKED		

FILE NAME = c:\pw_work\FWIDOT\DAVISONJL\dms36538\xs0078sheet_74313.dgn	USER NAME = davisonjl	DESIGNED - JLD	REVISED -
		DRAWN - JLD	REVISED -
	PLOT SCALE = 10.0000 ' / IN.	CHECKED -	REVISED -
	PLOT DATE = 1/20/2009	DATE -	REVISED -

STATE OF ILLINOIS
DEPARTMENT OF TRANSPORTATION

CROSS SECTIONS
S.N. 026-0078

SCALE: 10:5 | SHEET NO. 3 OF 5 SHEETS | STA. 989+25.00 TO STA. 990+00.00

F.A.I. RTE.	SECTION	COUNTY	TOTAL SHEETS	SHEET NO.
70	D7 SAFETY 2009-1	FAYETTE	100	80
		CONTRACT NO. 74313		

FED. ROAD DIST. NO. | ILLINOIS | FED. AID PROJECT

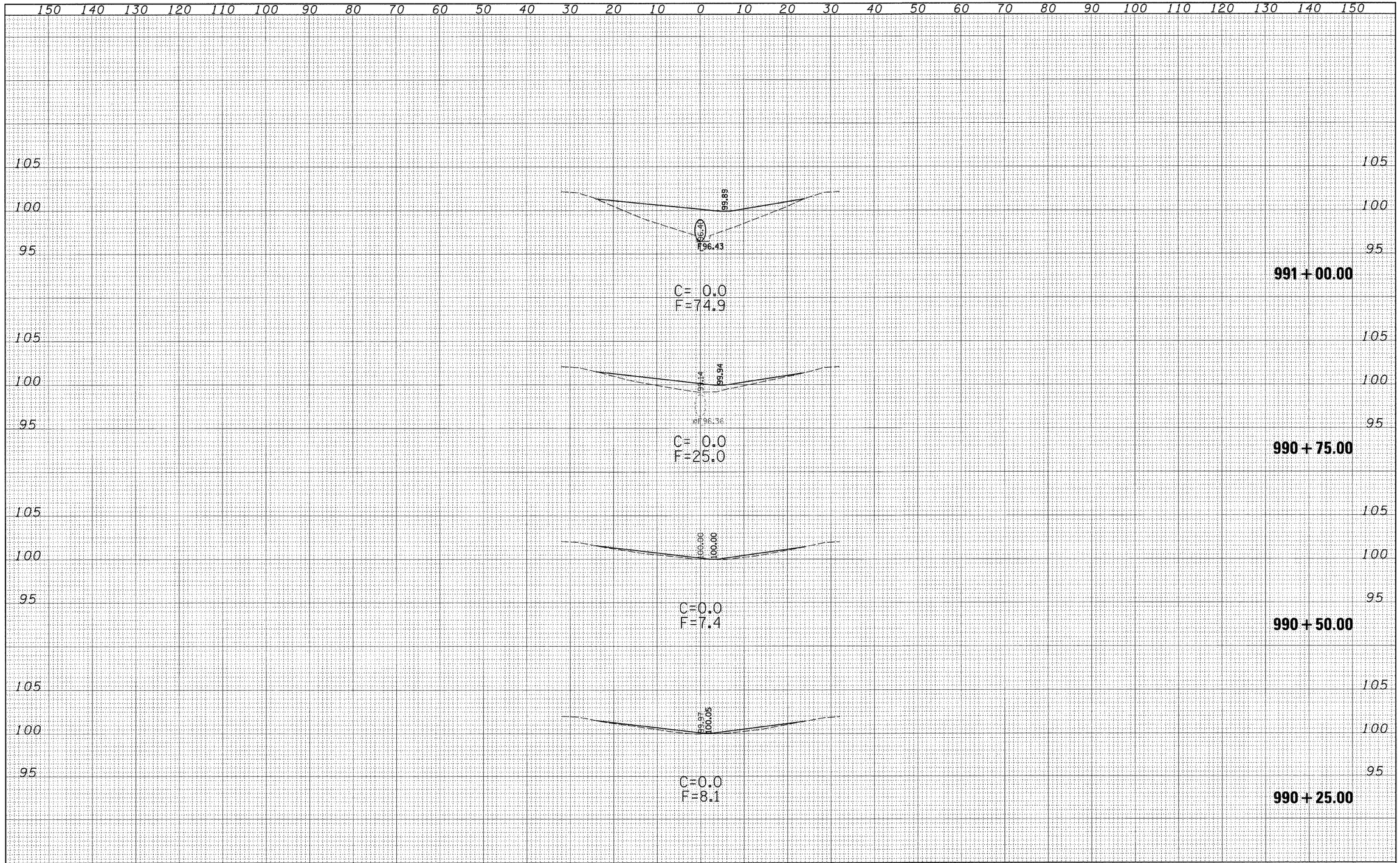

FINAL SURVEY	SURVEYED / PLOTTED / TEMPLATE / AREAS / AREAS CHECKED	BY	DATE
NOTE BOOK			
NO.			

ORIGINAL SURVEY	SURVEYED / PLOTTED / TEMPLATE / AREAS / AREAS CHECKED	BY	DATE
NOTE BOOK			
NO.			

FILE NAME = c:\pw_work\PWIDOT\DAVISONJL\dms36538\vs0078sheet_74313.dgn

USER NAME = davisonjl

PLOT SCALE = 10.0000 ' / IN.

PLOT DATE = 1/20/2009

DESIGNED - JLD	REVISED -
DRAWN - JLD	REVISED -
CHECKED -	REVISED -
DATE -	REVISED -

STATE OF ILLINOIS
DEPARTMENT OF TRANSPORTATION

CROSS SECTIONS
S.N. 026-0078

SCALE: 10:5 | SHEET NO. 4 OF 5 SHEETS | STA. 990+25.00 TO STA. 991+00.00

F.A.I. RTE.	SECTION	COUNTY	TOTAL SHEETS	SHEET NO.
70	D7 SAFETY 2009-1	FAYETTE	100	81
		CONTRACT NO. 74313		

FED. ROAD DIST. NO. | ILLINOIS | FED. AID PROJECT

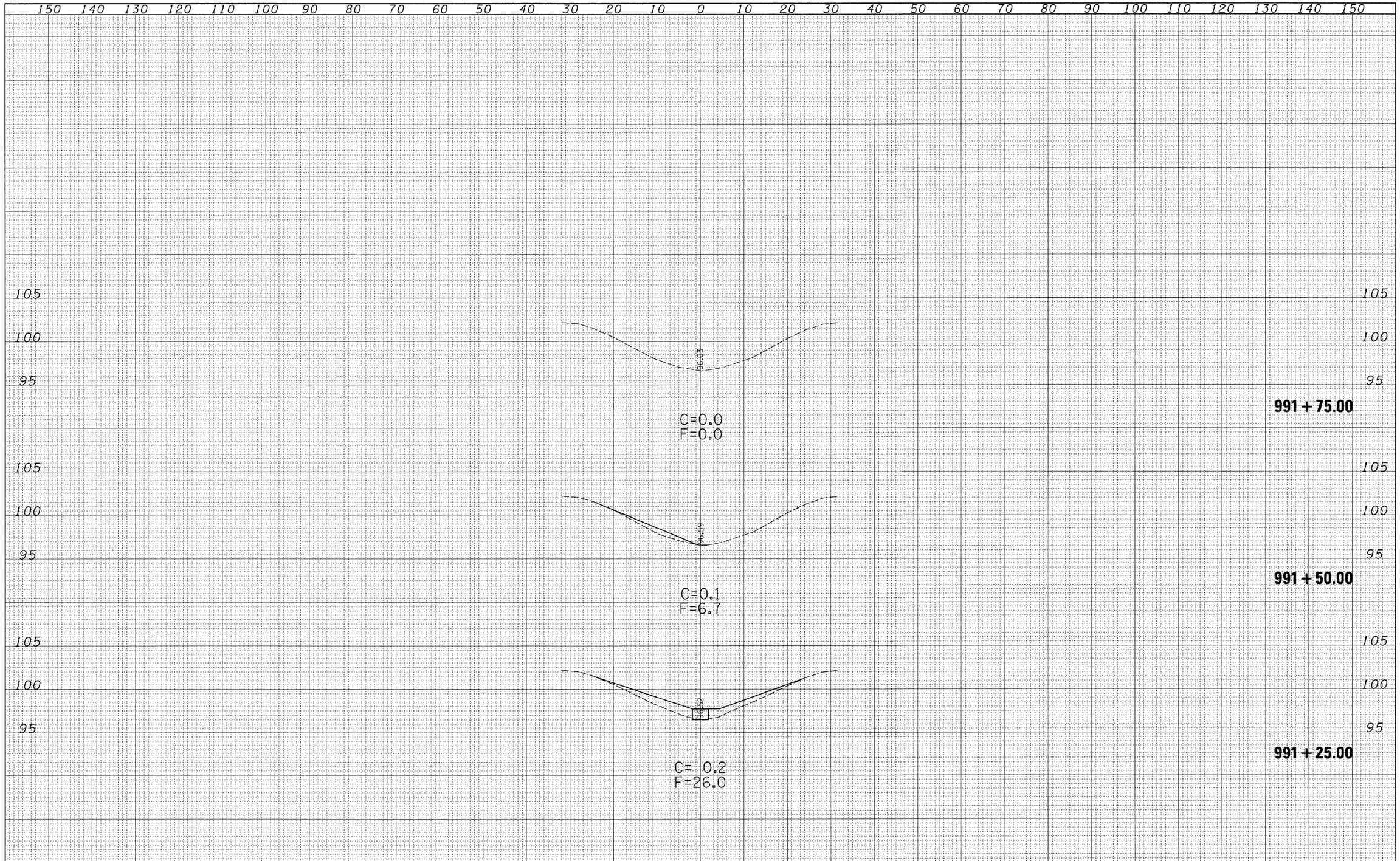

FINAL SURVEY		BY	DATE
NOTE BOOK	SURVEYED		
	PLOTTED		
	TEMPLATE		
	AREAS		
NO.	AREAS CHECKED		

ORIGINAL SURVEY		BY	DATE
NOTE BOOK	SURVEYED		
	PLOTTED		
	TEMPLATE		
	AREAS		
NO.	AREAS CHECKED		

FILE NAME = c:\pw_work\PWIDOT\DAVISONJL\dms36538\vs2078sheet_74313.dgn	USER NAME = davisonjl	DESIGNED - JLD	REVISED -
		DRAWN - JLD	REVISED -
	PLOT SCALE = 10.0000 ' / IN.	CHECKED -	REVISED -
	PLOT DATE = 1/20/2009	DATE -	REVISED -

STATE OF ILLINOIS
DEPARTMENT OF TRANSPORTATION

CROSS SECTIONS
S.N. 026-0078

SCALE: 10:0 | SHEET NO. 5 OF 5 SHEETS | STA. 991+00.00 TO STA. 991+50.00

F.A.I. RTE.	SECTION	COUNTY	TOTAL SHEETS	SHEET NO.
70	D7 SAFETY 2009-1	FAYETTE	100	82
		CONTRACT NO. 74313		
FED. ROAD DIST. NO.	ILLINOIS	FED. AID PROJECT		

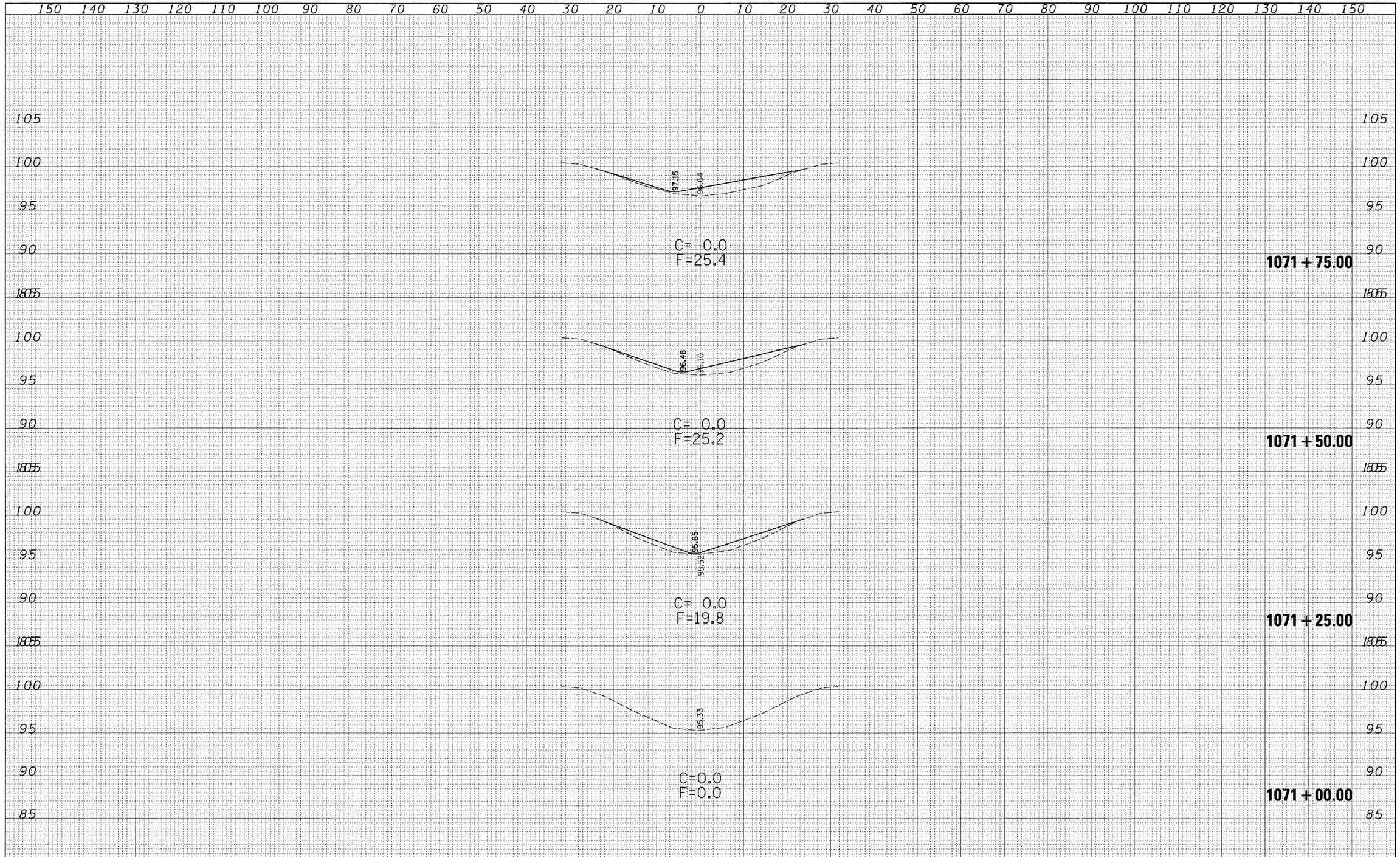

FINAL SURVEY	SURVEYED	BY	DATE
	PLOTTED		
NOTE BOOK	TEMPLATE		
NO.	AREAS		
	AREAS CHECKED		

ORIGINAL SURVEY	SURVEYED	BY	DATE
	PLOTTED		
NOTE BOOK	TEMPLATE		
NO.	AREAS		
	AREAS CHECKED		

FILE NAME = c:\pw_work\PWIDOT\DAVISONJL\dms36538\xs0079sheet_74313.dgn	USER NAME = davisonjl	DESIGNED - JLD	REVISED -
		DRAWN - JLD	REVISED -
	PLOT SCALE = 10.0000 ' / IN.	CHECKED -	REVISED -
	PLOT DATE = 1/20/2009	DATE -	REVISED -

STATE OF ILLINOIS
DEPARTMENT OF TRANSPORTATION

CROSS SECTIONS
S.N. 026-0079

SCALE: 10:5 | SHEET NO. 1 OF 5 SHEETS | STA. 1071+00.00 TO STA. 1071+75.00

F.A.I. RTE.	SECTION	COUNTY	TOTAL SHEETS	SHEET NO.
70	D7 SAFETY 2009-1	FAYETTE	100	83
		CONTRACT NO. 74313		

FED. ROAD DIST. NO. | ILLINOIS | FED. AID PROJECT

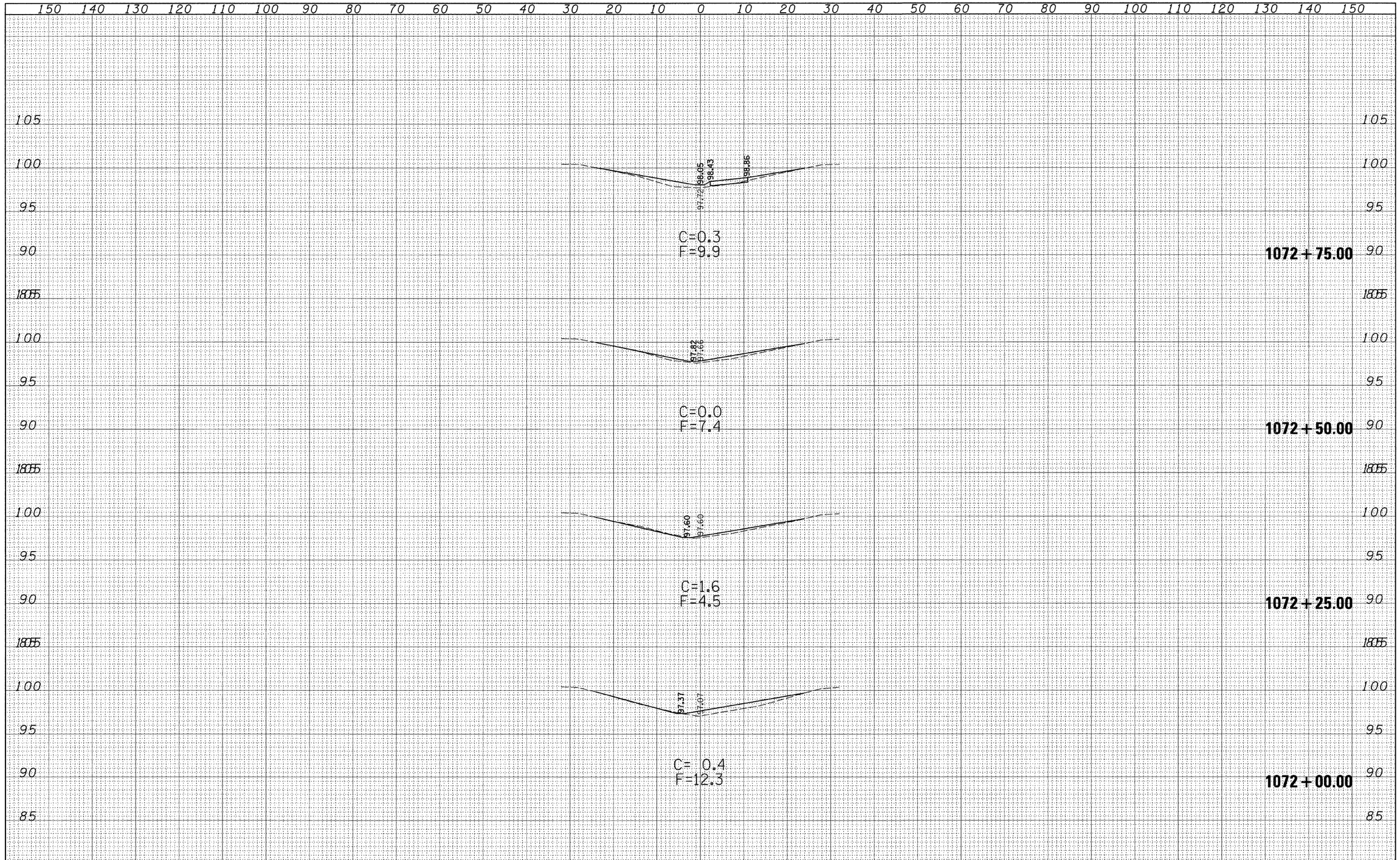

FINAL SURVEY	SURVEYED	BY	DATE
	PLOTTED		
NOTE BOOK	TEMPLATE		
	AREAS		
NO.	AREAS CHECKED		

ORIGINAL SURVEY	SURVEYED	BY	DATE
	PLOTTED		
NOTE BOOK	TEMPLATE		
	AREAS		
NO.	AREAS CHECKED		

FILE NAME = c:\pw_work\PWIDOT\DAVISONJL\dms36538\vs0079sheet_74313.dgn	USER NAME = davisonjl	DESIGNED - JLD	REVISED -
		DRAWN - JLD	REVISED -
	PLOT SCALE = 10.0000 ' / IN.	CHECKED -	REVISED -
	PLOT DATE = 1/20/2009	DATE -	REVISED -

STATE OF ILLINOIS
DEPARTMENT OF TRANSPORTATION

CROSS SECTIONS
S.N. 026-0079

SCALE: 10:5 | SHEET NO. 2 OF 5 SHEETS | STA. 1072+00.00 TO STA. 1072+75.00

F.A.I. RTE.	SECTION	COUNTY	TOTAL SHEETS	SHEET NO.
70	D7 SAFETY 2009-1	FAYETTE	100	84
		CONTRACT NO. 74313		

FED. ROAD DIST. NO. | ILLINOIS | FED. AID PROJECT

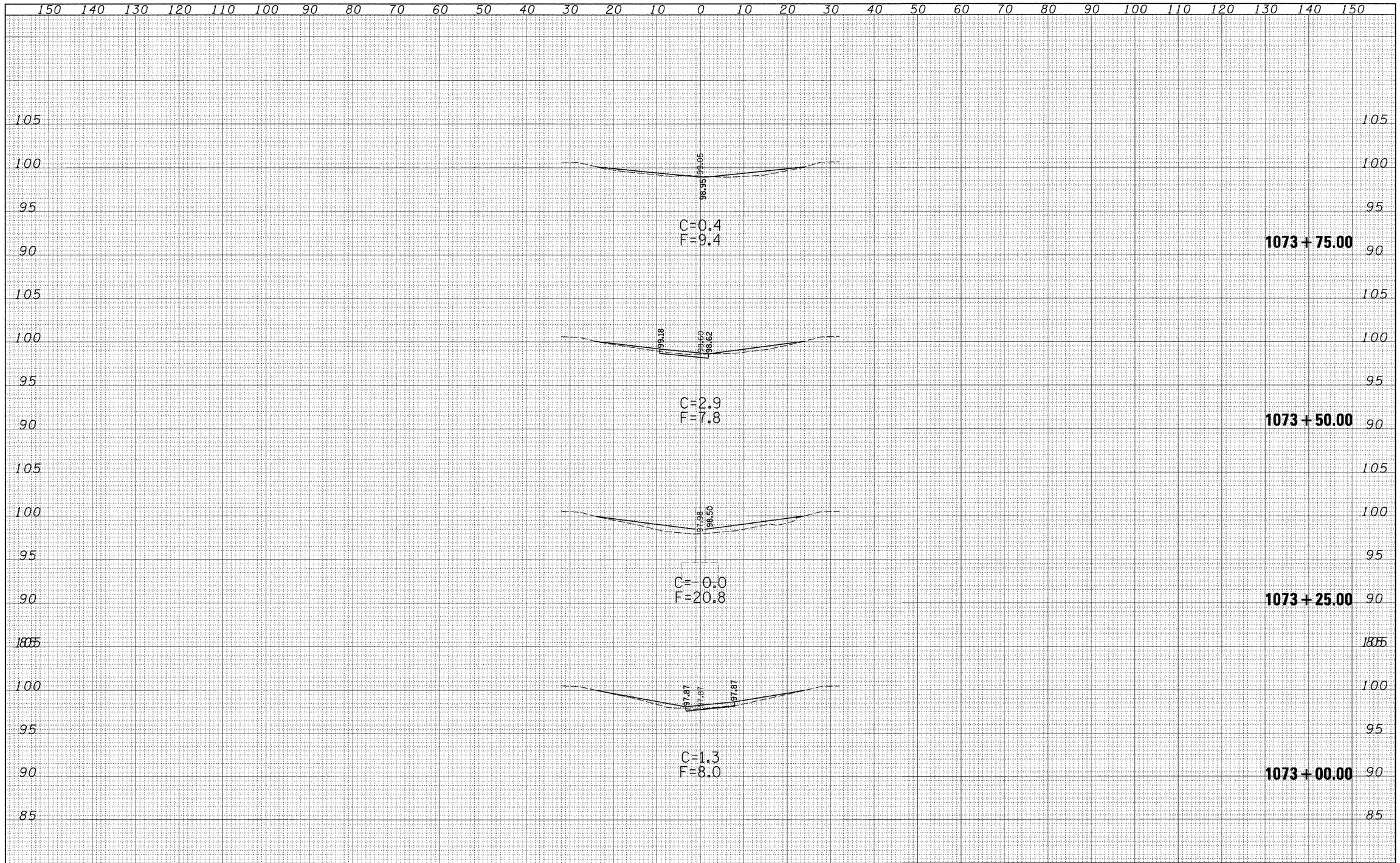

FINAL SURVEY	BY	DATE
SURVEYED		
PLOTTED		
NOTE BOOK TEMPLATE		
AREAS		
NO. AREAS CHECKED		

ORIGINAL SURVEY	BY	DATE
SURVEYED		
PLOTTED		
NOTE BOOK TEMPLATE		
AREAS		
NO. AREAS CHECKED		

FILE NAME = c:\pw_work\PWIDOT\DAVISONJL\dms36538\xs0079sheet_74313.dgn

USER NAME = davisonjl

PLOT SCALE = 10.0000 ' / IN.

PLOT DATE = 1/20/2009

DESIGNED - JLD	REVISED -	
DRAWN - JLD	REVISED -	
CHECKED -	REVISED -	
DATE -	REVISED -	

STATE OF ILLINOIS
DEPARTMENT OF TRANSPORTATION

CROSS SECTIONS
S.N. 026-0079

SCALE: 10:5 | SHEET NO. 3 OF 5 SHEETS | STA. 1073+00.00 TO STA. 1073+75.00

F.A.I. RTE.	SECTION	COUNTY	TOTAL SHEETS	SHEET NO.
70	D7 SAFETY 2009-1	FAYETTE	100	85
		CONTRACT NO. 74313		

FED. ROAD DIST. NO. | ILLINOIS | FED. AID PROJECT

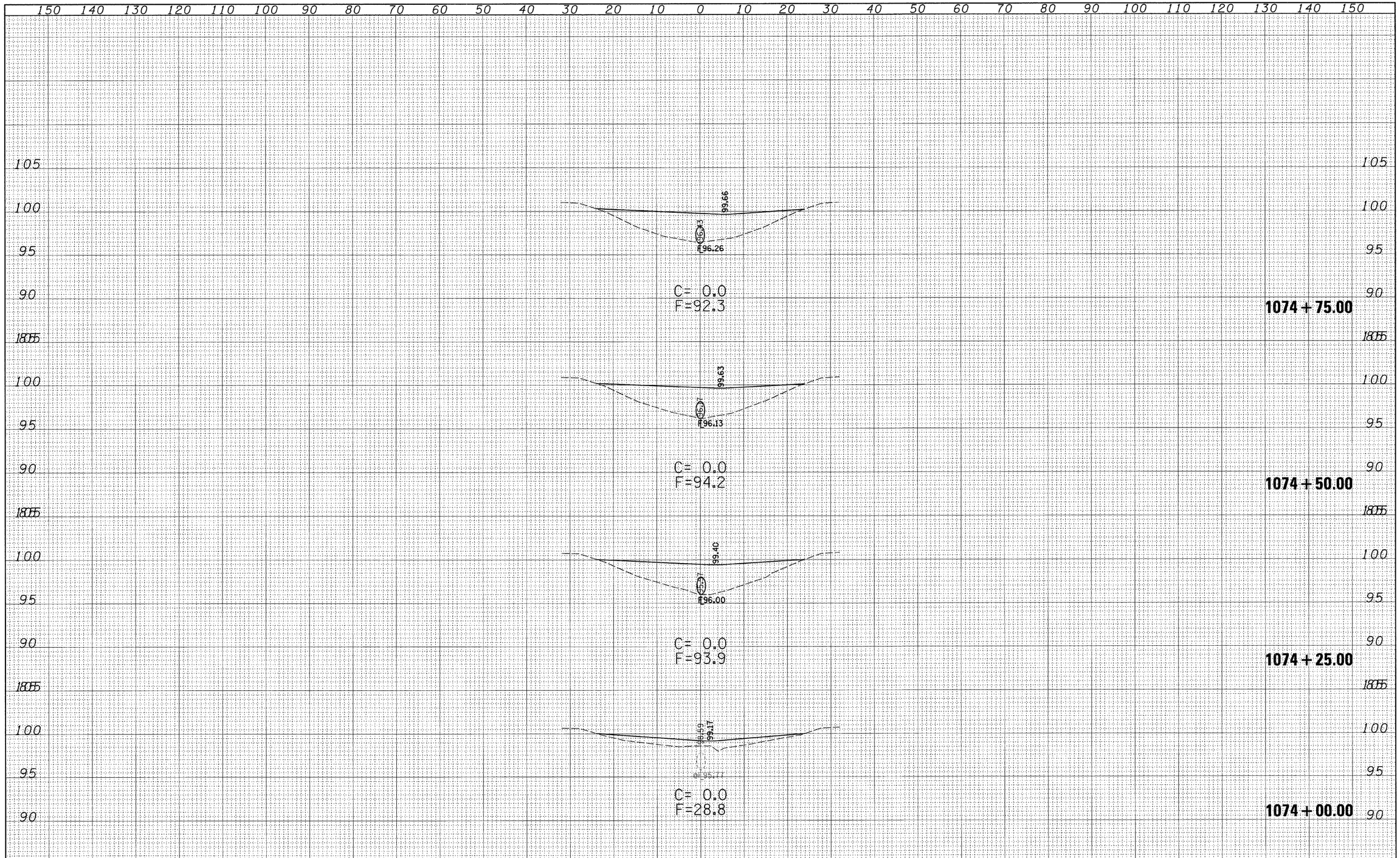

FILE NAME = c:\pw_work\PWIDOT\DAVISONJL\dms36538\xs0079sheet_74313.dgn	USER NAME = davisonjl	DESIGNED - JLD	REVISED -
		DRAWN - JLD	REVISED -
	PLOT SCALE = 10.0000 ' / IN.	CHECKED -	REVISED -
	PLOT DATE = 1/20/2009	DATE -	REVISED -

STATE OF ILLINOIS
DEPARTMENT OF TRANSPORTATION

CROSS SECTIONS
S.N. 026-0079

SCALE: 10:5 | SHEET NO. 4 OF 5 SHEETS | STA. 1074+00.00 TO STA. 1074+75.00

F.A.I. RTE.	SECTION	COUNTY	TOTAL SHEETS	SHEET NO.
70	D7 SAFETY 2009-1	FAYETTE	100	86
		CONTRACT NO. 74313		

FED. ROAD DIST. NO. | ILLINOIS | FED. AID PROJECT

FINAL SURVEY		BY	DATE
	SURVEYED		
	PLOTTED		
NOTE BOOK	TEMPLATE		
	AREAS		
NO.	AREAS CHECKED		

ORIGINAL SURVEY		BY	DATE
	SURVEYED		
	PLOTTED		
NOTE BOOK	TEMPLATE		
	AREAS		
NO.	AREAS CHECKED		

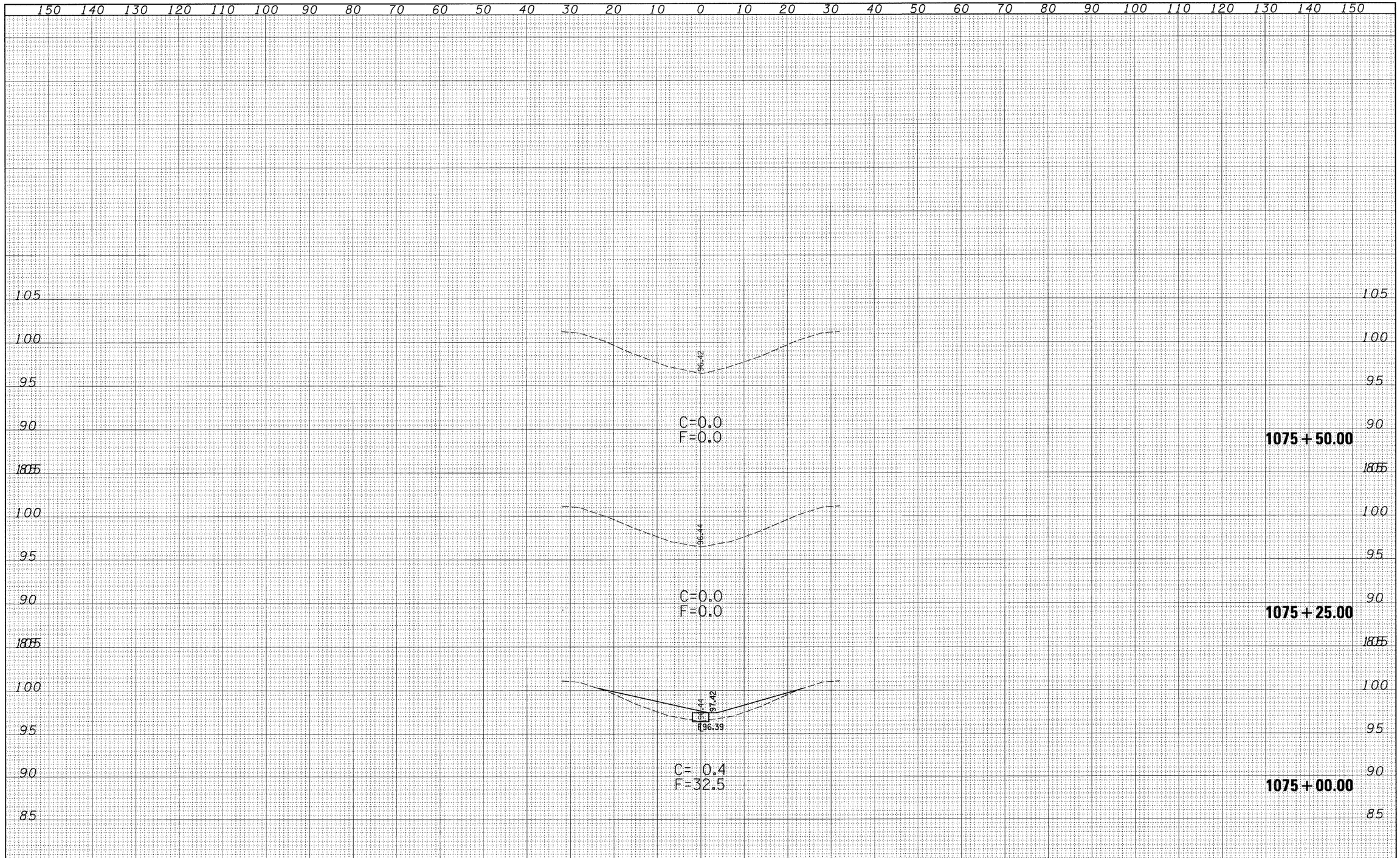

FINAL SURVEY		BY	DATE
NOTE BOOK	SURVEYED		
	PLOTTED		
	TEMPLATE		
	AREAS		
NO.	AREAS CHECKED		

ORIGINAL SURVEY		BY	DATE
NOTE BOOK	SURVEYED		
	PLOTTED		
	TEMPLATE		
	AREAS		
NO.	AREAS CHECKED		

FILE NAME = c:\pw_work\PWIDOT\DAVISONJL\dms36538\rs0079sheet_74313.dgn	USER NAME = davisonjl	DESIGNED - JLD	REVISED -
		DRAWN - JLD	REVISED -
	PLOT SCALE = 10.0000 ' / IN.	CHECKED -	REVISED -
	PLOT DATE = 1/20/2009	DATE -	REVISED -

STATE OF ILLINOIS
DEPARTMENT OF TRANSPORTATION

CROSS SECTIONS
S.N. 026-0079

SCALE: 10:5 | SHEET NO. 5 OF 5 SHEETS | STA. 1075+00.00 TO STA. 1075+50.00

F.A.I. RTE.	SECTION	COUNTY	TOTAL SHEETS	SHEET NO.
70	D7 SAFETY 2009-1	FAYETTE	100	87
		CONTRACT NO. 74313		

FED. ROAD DIST. NO. | ILLINOIS | FED. AID PROJECT

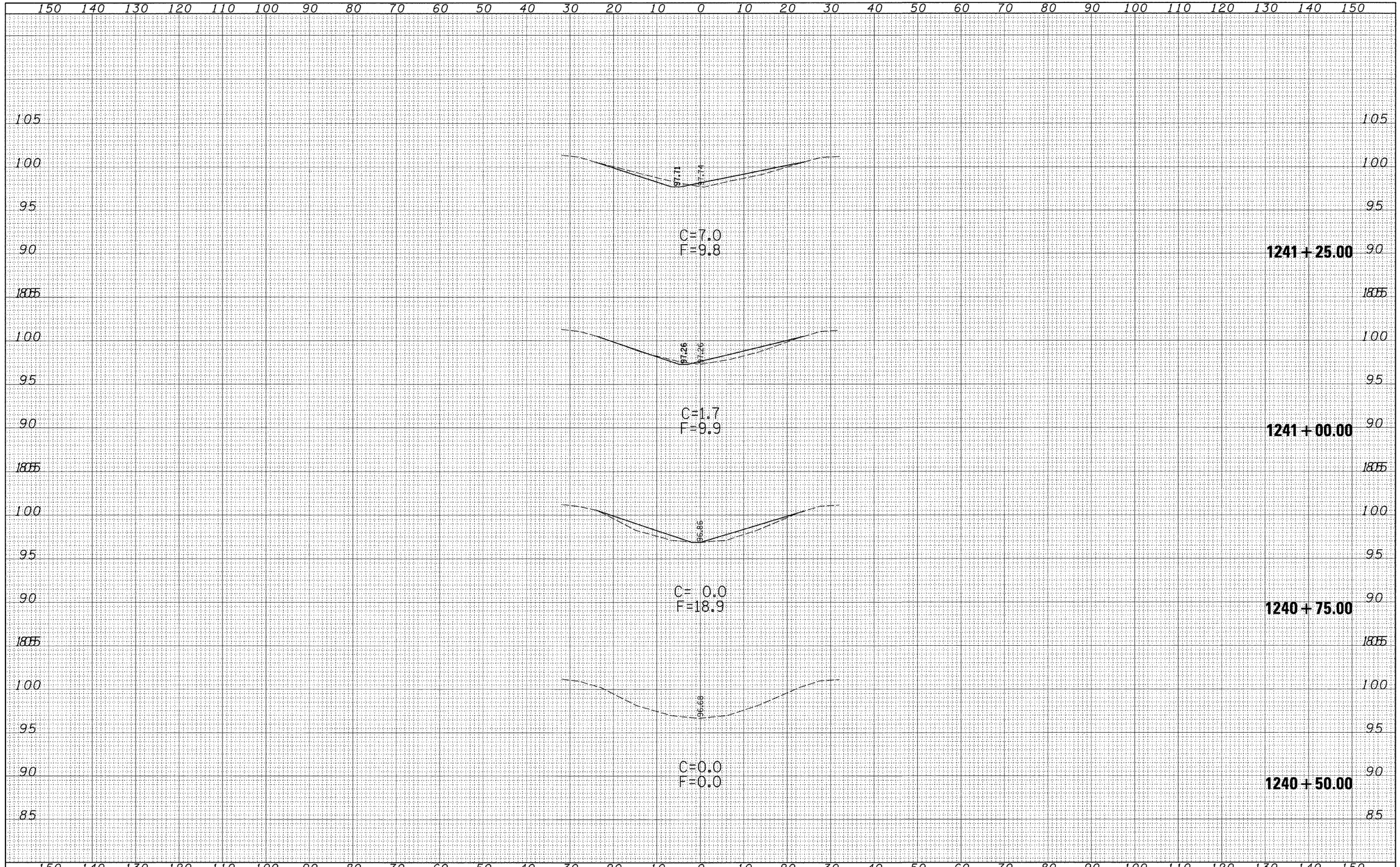

FINAL SURVEY		BY	DATE
	SURVEYED		
	PLOTTED		
NOTE BOOK	TEMPLATE		
	AREAS		
NO.	AREAS CHECKED		

ORIGINAL SURVEY		BY	DATE
	SURVEYED		
	PLOTTED		
NOTE BOOK	TEMPLATE		
	AREAS		
NO.	AREAS CHECKED		

FILE NAME = c:\pw_work\PWIDOT\DAVISONJL\dms36538\xs0080sheet_74313.dgn

USER NAME = davisonjl

PLOT SCALE = 10.0000 ' / IN.

PLOT DATE = 1/20/2009

DESIGNED -	JLD	REVISED -	
DRAWN -	JLD	REVISED -	
CHECKED -		REVISED -	
DATE -		REVISED -	

STATE OF ILLINOIS
DEPARTMENT OF TRANSPORTATION

CROSS SECTIONS
S.N. 026-0080

SCALE: 10:5 | SHEET NO. 1 OF 5 SHEETS | STA. 1240+50.00 TO STA. 1241+25.00

F.A.I. RTE.	SECTION	COUNTY	TOTAL SHEETS	SHEET NO.
70	D7 SAFETY 2009-1	FAYETTE	100	88
		CONTRACT NO. 74313		

FED. ROAD DIST. NO. | ILLINOIS | FED. AID PROJECT

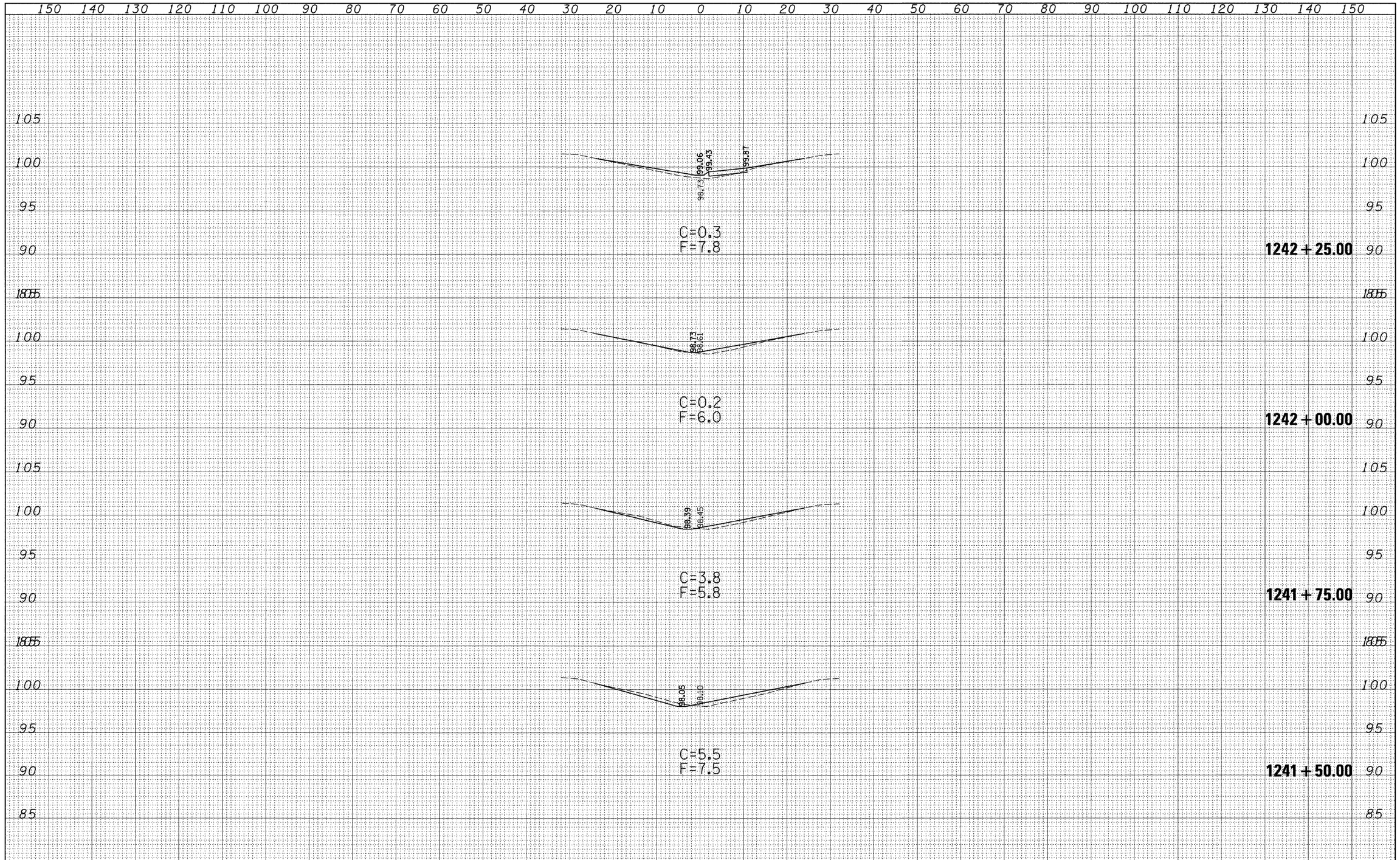

FINAL SURVEY	SURVEYED	BY	DATE
	PLOTTED		
NOTE BOOK	TEMPLATE		
NO.	AREAS		
	AREAS CHECKED		

ORIGINAL SURVEY	SURVEYED	BY	DATE
	PLOTTED		
NOTE BOOK	TEMPLATE		
NO.	AREAS		
	AREAS CHECKED		

FILE NAME = c:\pw_work\PWIDOT\DAVISONJL\dms36538\xs0080sheet_74313.dgn	USER NAME = davisonjl	DESIGNED - JLD	REVISED -
		DRAWN - JLD	REVISED -
	PLOT SCALE = 10.0000 ' / IN.	CHECKED -	REVISED -
	PLOT DATE = 1/20/2009	DATE -	REVISED -

STATE OF ILLINOIS
DEPARTMENT OF TRANSPORTATION

CROSS SECTIONS
S.N. 026-0080

SCALE: 10:5 | SHEET NO. 2 OF 5 SHEETS | STA. 1241+50.00 TO STA. 1242+25.00

F.A.I. RTE.	SECTION	COUNTY	TOTAL SHEETS	SHEET NO.
70	D7 SAFETY 2009-1	FAYETTE	100	89
		CONTRACT NO. 74313		

FED. ROAD DIST. NO. | ILLINOIS | FED. AID PROJECT

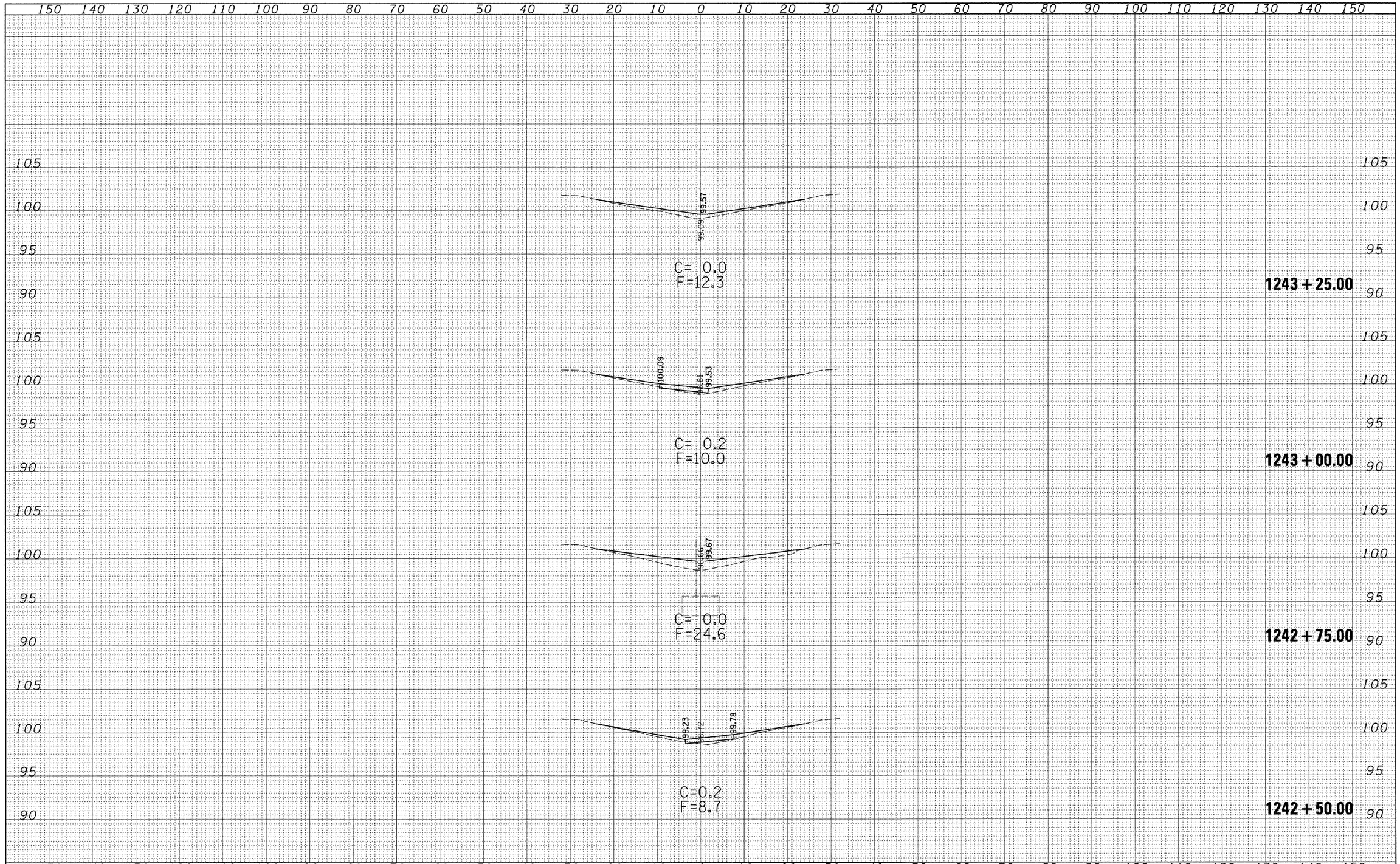

FINAL SURVEY	BY	DATE
SURVEYED		
PLOTTED		
NOTE BOOK TEMPLATE		
AREAS		
NO. AREAS CHECKED		

ORIGINAL SURVEY	BY	DATE
SURVEYED		
PLOTTED		
NOTE BOOK TEMPLATE		
AREAS		
NO. AREAS CHECKED		

FILE NAME = c:\pw_work\PWIDOT\DAVISONJL\dms36538\v80080sheet_74313.dgn	USER NAME = davisonjl	DESIGNED - JLD	REVISED -
		DRAWN - JLD	REVISED -
	PLOT SCALE = 10.0000 ' / IN.	CHECKED -	REVISED -
	PLOT DATE = 1/20/2009	DATE -	REVISED -

STATE OF ILLINOIS
DEPARTMENT OF TRANSPORTATION

CROSS SECTIONS
S.N. 026-0080

SCALE: 10:5 | SHEET NO. 3 OF 5 SHEETS | STA. 1242+50.00 TO STA. 1243+25.00

F.A.I. RTE.	SECTION	COUNTY	TOTAL SHEETS	SHEET NO.
70	D7 SAFETY 2009-1	FAYETTE	100	90
		CONTRACT NO. 74313		

FED. ROAD DIST. NO. | ILLINOIS | FED. AID PROJECT

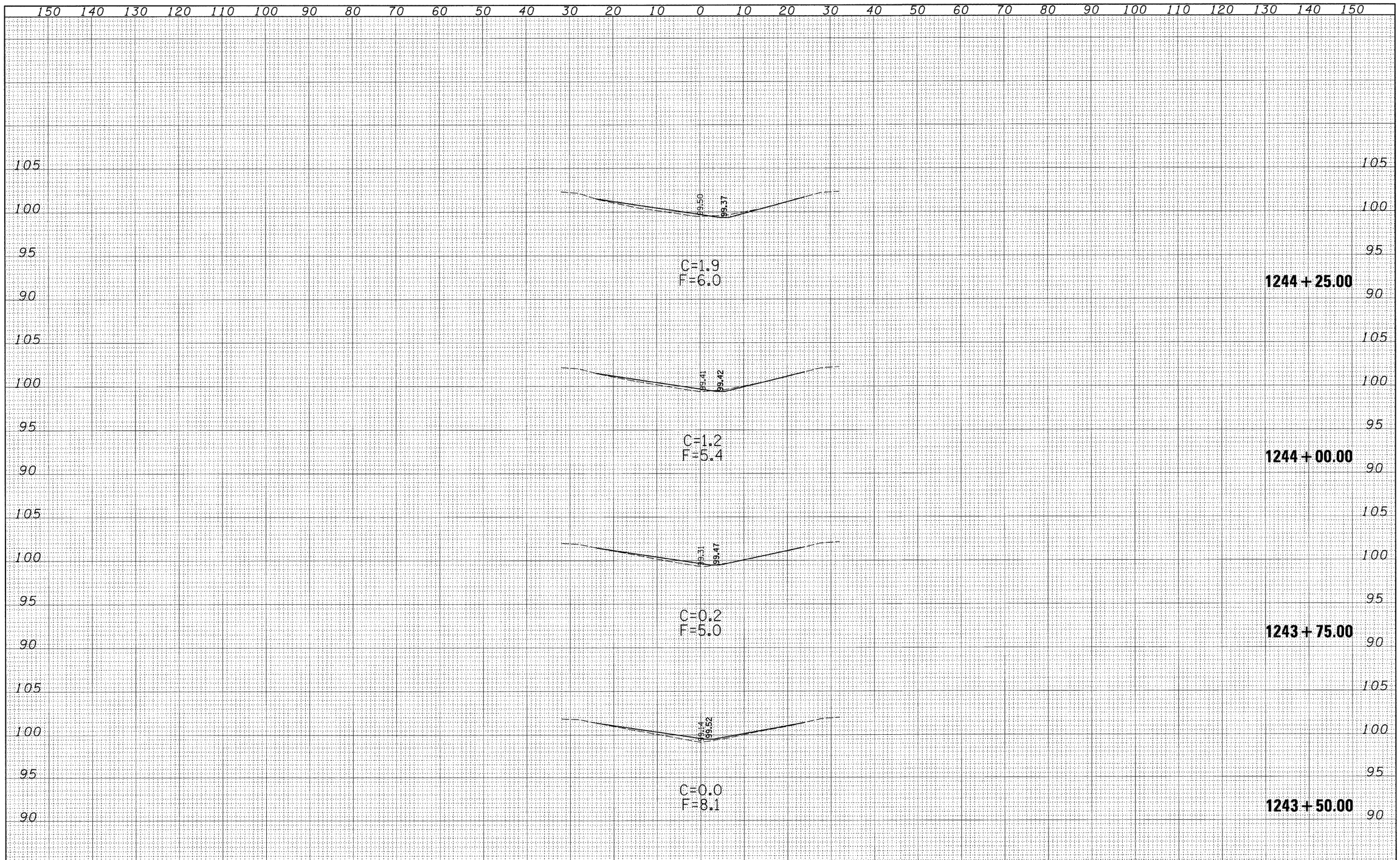

FINAL SURVEY		BY	DATE
NOTE BOOK	SURVEYED		
	PLOTTED		
	TEMPLATE		
	AREAS		
NO.	AREAS CHECKED		

ORIGINAL SURVEY		BY	DATE
NOTE BOOK	SURVEYED		
	PLOTTED		
	TEMPLATE		
	AREAS		
NO.	AREAS CHECKED		

FILE NAME = c:\pw_work\PWIDOT\DAVISONJL\dms36538\rs0080sheet_74313.dgn	USER NAME = davisonjl	DESIGNED - JLD	REVISED -
		DRAWN - JLD	REVISED -
	PLOT SCALE = 10.0000 ' / IN.	CHECKED -	REVISED -
	PLOT DATE = 1/20/2009	DATE -	REVISED -

STATE OF ILLINOIS
DEPARTMENT OF TRANSPORTATION

CROSS SECTIONS
S.N. 026-0080

SCALE: 10:5 | SHEET NO. 4 OF 5 SHEETS | STA. 1243+50.00 TO STA. 1244+25.00

F.A.I. RTE.	SECTION	COUNTY	TOTAL SHEETS	SHEET NO.
70	D7 SAFETY 2009-1	FAYETTE	100	91
		CONTRACT NO. 74313		

FED. ROAD DIST. NO. | ILLINOIS | FED. AID PROJECT

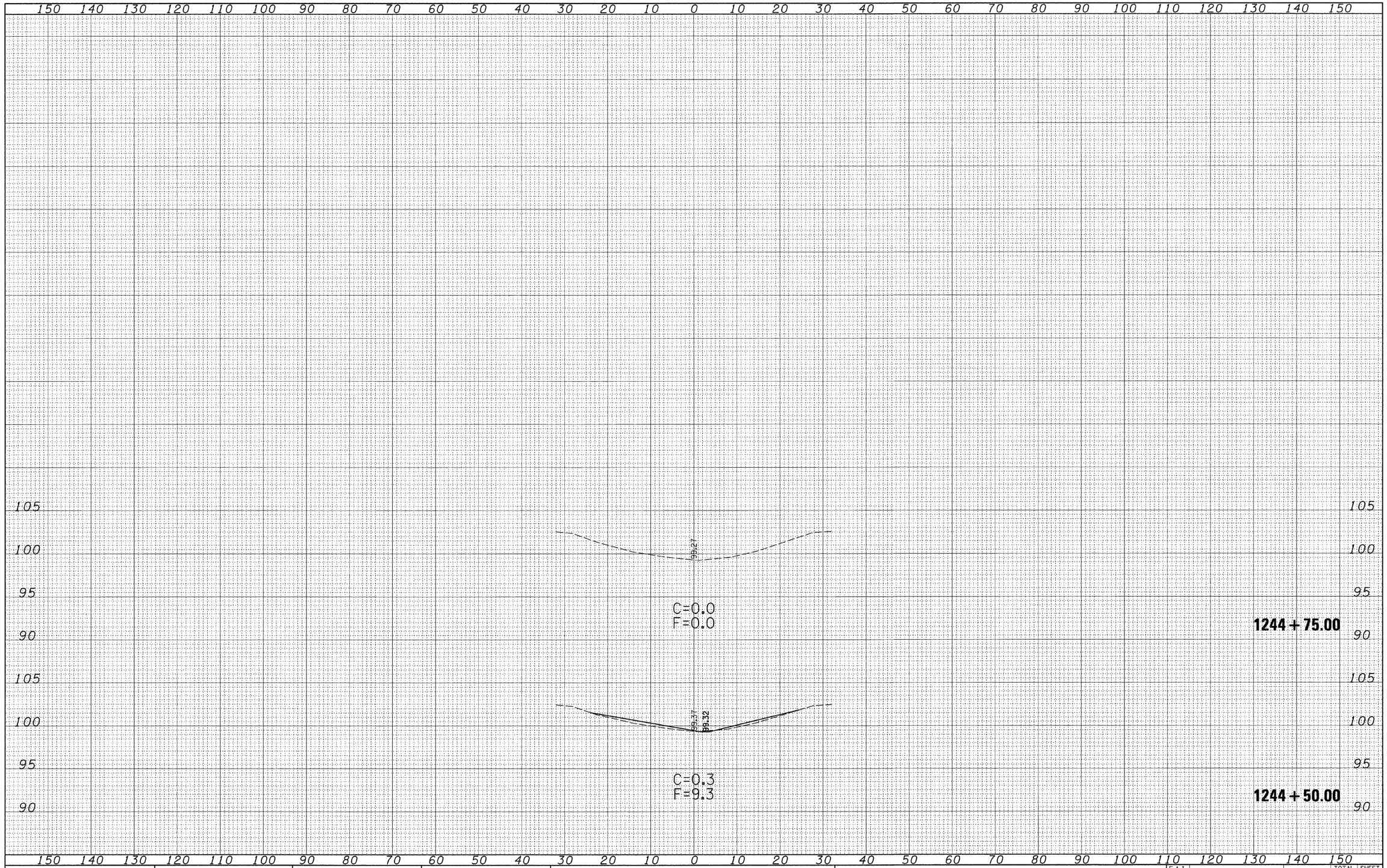

FINAL SURVEY		BY	DATE
	SURVEYED		
	PLOTTED		
NOTE BOOK	TEMPLATE		
	AREAS		
NO.	AREAS CHECKED		

ORIGINAL SURVEY		BY	DATE
	SURVEYED		
	PLOTTED		
NOTE BOOK	TEMPLATE		
	AREAS		
NO.	AREAS CHECKED		

FILE NAME = c:\pw_work\PWIDOT\DAVISONJL\dms36538\xs2080sheet_74313.dgn	USER NAME = davisonjl	DESIGNED - JLD	REVISED -
		DRAWN - JLD	REVISED -
	PLOT SCALE = 10.0000 ' / IN.	CHECKED -	REVISED -
	PLOT DATE = 1/20/2009	DATE -	REVISED -

STATE OF ILLINOIS
DEPARTMENT OF TRANSPORTATION

CROSS SECTIONS
S.N. 026-0080

SCALE: 10:5 | SHEET NO. 5 OF 5 SHEETS | STA. 1244+50.00 TO STA. 1244+75.00

F.A.I. RTE.	SECTION	COUNTY	TOTAL SHEETS	SHEET NO.
70	D7 SAFETY 2009-1	FAYETTE	100	92
		CONTRACT NO. 74313		

FED. ROAD DIST. NO. | ILLINOIS | FED. AID PROJECT

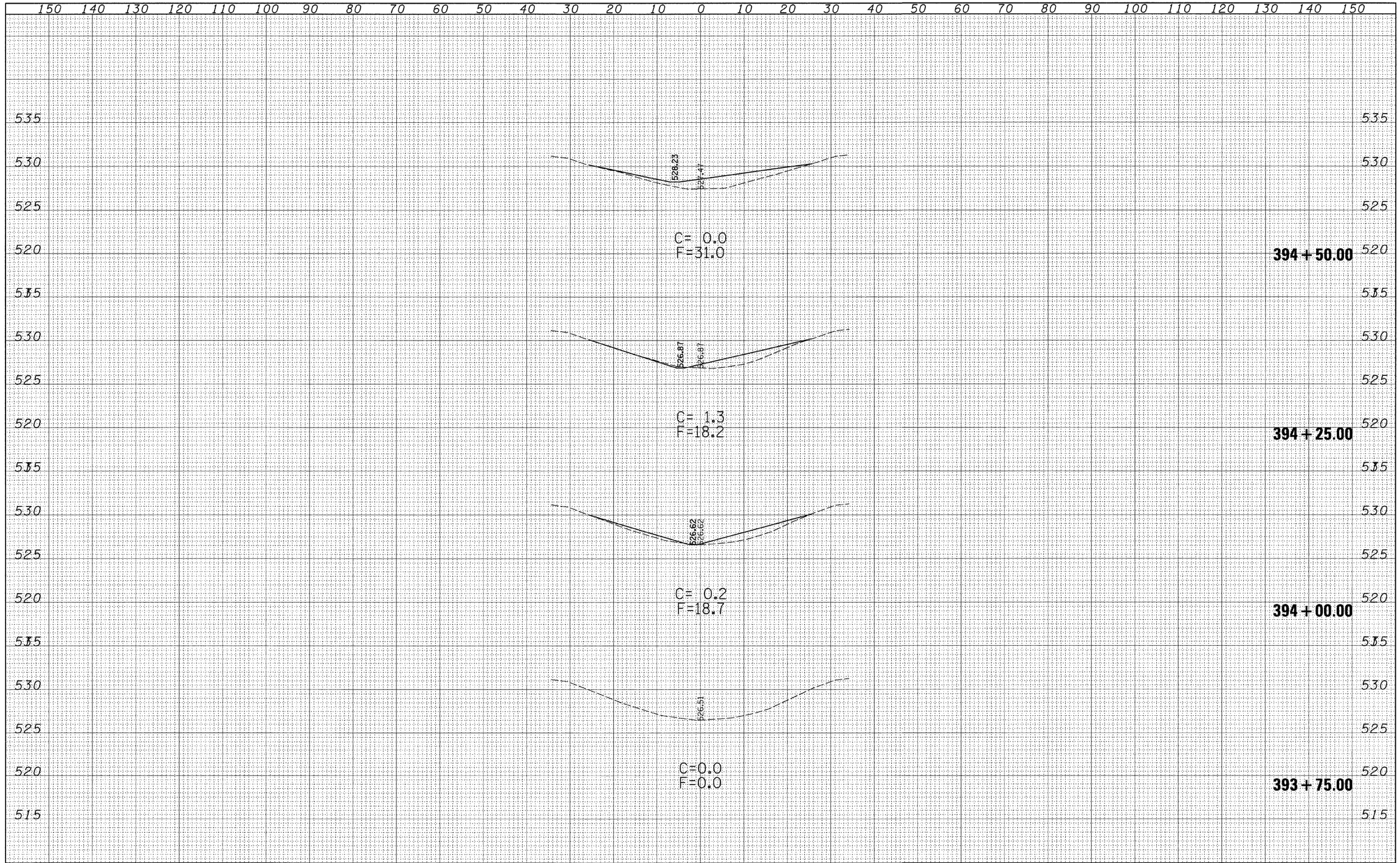

FINAL SURVEY	BY	DATE
SURVEYED		
PLOTTED		
TEMPLATE		
AREAS		
AREAS CHECKED		
NOTE BOOK NO.		

ORIGINAL SURVEY	BY	DATE
SURVEYED		
PLOTTED		
TEMPLATE		
AREAS		
AREAS CHECKED		
NOTE BOOK NO.		

FILE NAME = c:\pw_work\PWIDOT\DAVISONJL\dms36538\xs0087sheet_74313.dgn	USER NAME = davisonjl	DESIGNED - JLD	REVISED -
		DRAWN - JLD	REVISED -
	PLOT SCALE = 10.2000 ' / IN.	CHECKED -	REVISED -
	PLOT DATE = 1/20/2009	DATE -	REVISED -

STATE OF ILLINOIS
DEPARTMENT OF TRANSPORTATION

CROSS SECTIONS
S.N. 026-0087

SCALE: 10:5 | SHEET NO. 1 OF 6 SHEETS | STA. 393+75.00 TO STA. 394+50.00

F.A.I. RTE.	SECTION	COUNTY	TOTAL SHEETS	SHEET NO.
70	D7 SAFETY 2009-1	FAYETTE	100	93
		CONTRACT NO. 74313		

FED. ROAD DIST. NO. | ILLINOIS | FED. AID PROJECT

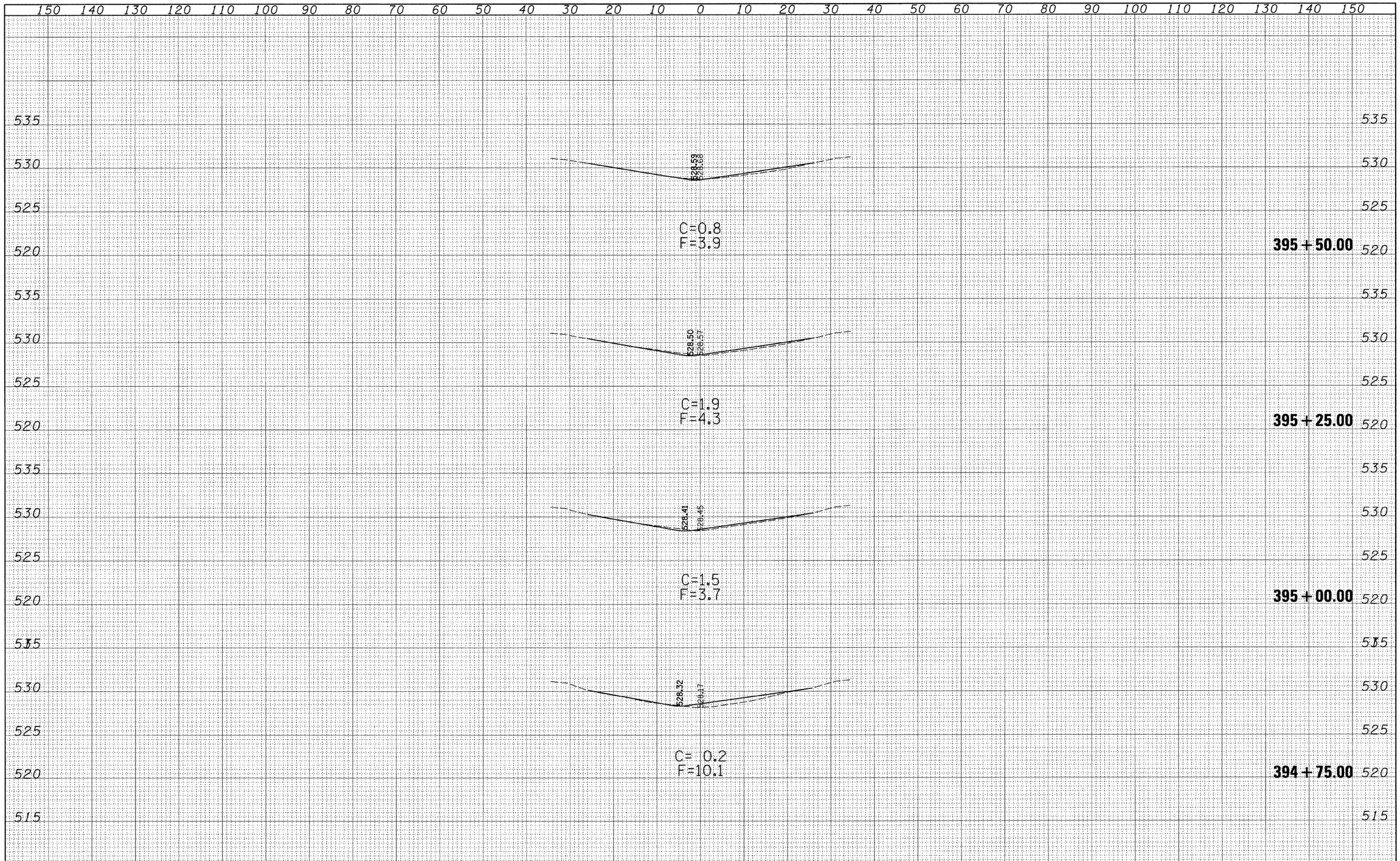

FINAL SURVEY	BY	DATE
SURVEYED		
PLOTTED		
TEMPLATE		
AREAS		
AREAS CHECKED		
NOTE BOOK NO.		

ORIGINAL SURVEY	BY	DATE
SURVEYED		
PLOTTED		
TEMPLATE		
AREAS		
AREAS CHECKED		
NOTE BOOK NO.		

FILE NAME = c:\pw_work\PWIDOT\DAVISONJL\dms36538\xs0087sheet_74313.dgn	USER NAME = davisonjl	DESIGNED - JLD	REVISED -
		DRAWN - JLD	REVISED -
	PLOT SCALE = 10.0000 ' / IN.	CHECKED -	REVISED -
	PLOT DATE = 1/28/2009	DATE -	REVISED -

STATE OF ILLINOIS
DEPARTMENT OF TRANSPORTATION

CROSS SECTIONS
S.N. 026-0087

SCALE: 10:5 | SHEET NO. 2 OF 6 SHEETS | STA. 394+75.00 TO STA. 395+50.00

F.A.I. RTE.	SECTION	COUNTY	TOTAL SHEETS	SHEET NO.
70	D7 SAFETY 2009-1	FAYETTE	100	94
		CONTRACT NO. 74313		

FED. ROAD DIST. NO. | ILLINOIS | FED. AID PROJECT

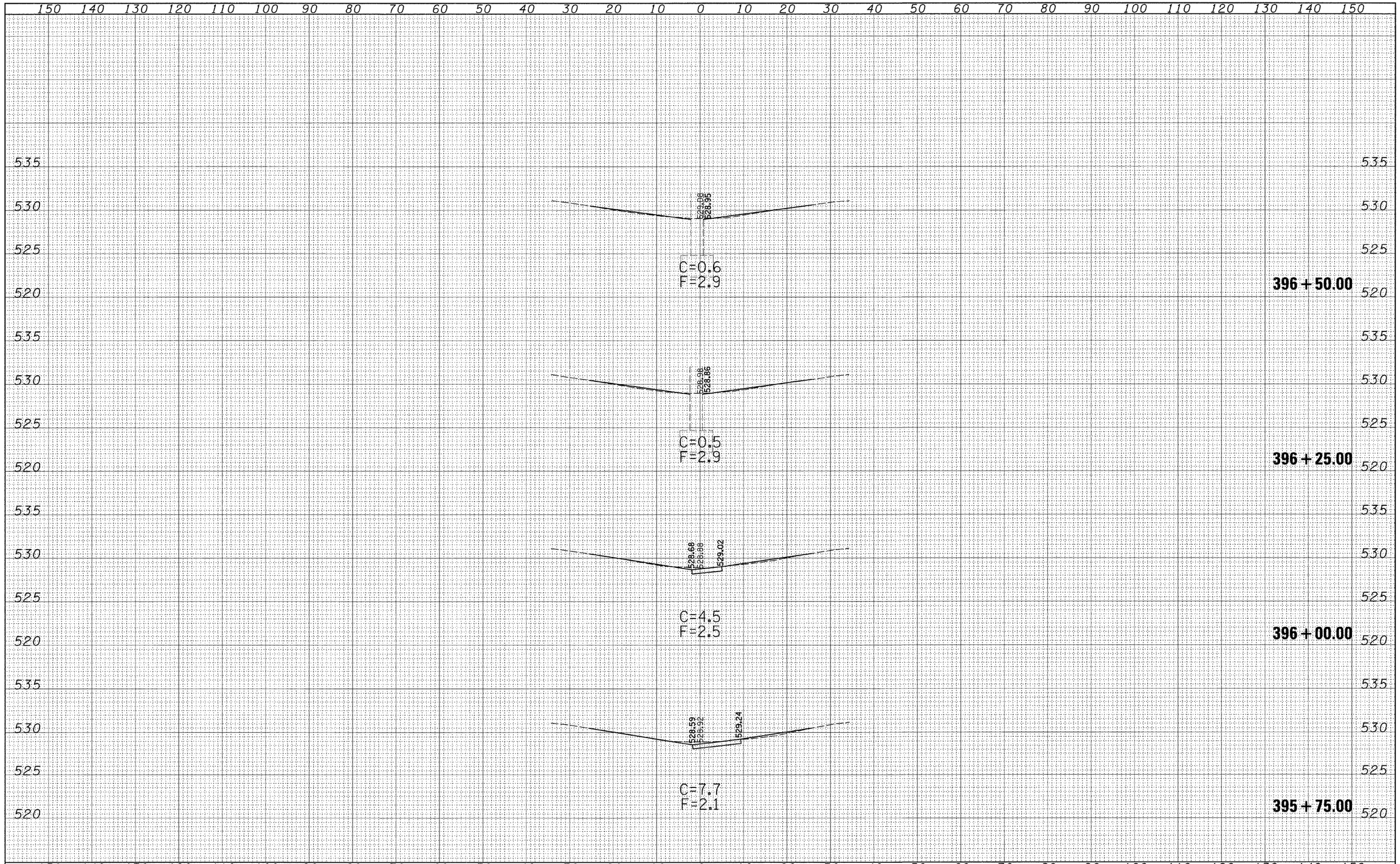

FINAL SURVEY		BY	DATE
	SURVEYED		
	PLOTTED		
NOTE BOOK	TEMPLATE		
	AREAS		
NO.	AREAS CHECKED		

ORIGINAL SURVEY		BY	DATE
	SURVEYED		
	PLOTTED		
NOTE BOOK	TEMPLATE		
	AREAS		
NO.	AREAS CHECKED		

FILE NAME = c:\pw_work\PWIDOT\DAVISONJL\dms36538\xs0087sheet_74313.dgn	USER NAME = davisonjl	DESIGNED - JLD	REVISED -
		DRAWN - JLD	REVISED -
	PLOT SCALE = 10.0000 ' / IN.	CHECKED -	REVISED -
	PLOT DATE = 1/20/2009	DATE -	REVISED -

STATE OF ILLINOIS
DEPARTMENT OF TRANSPORTATION

CROSS SECTIONS
S.N. 026-0087

SCALE: 10:5 | SHEET NO. 3 OF 6 SHEETS | STA. 395+75.00 TO STA. 396+50.00

F.A.I. RTE.	SECTION	COUNTY	TOTAL SHEETS	SHEET NO.
70	D7 SAFETY 2009-1	FAYETTE	100	95
		CONTRACT NO. 74313		
FED. ROAD DIST. NO.	ILLINOIS	FED. AID PROJECT		

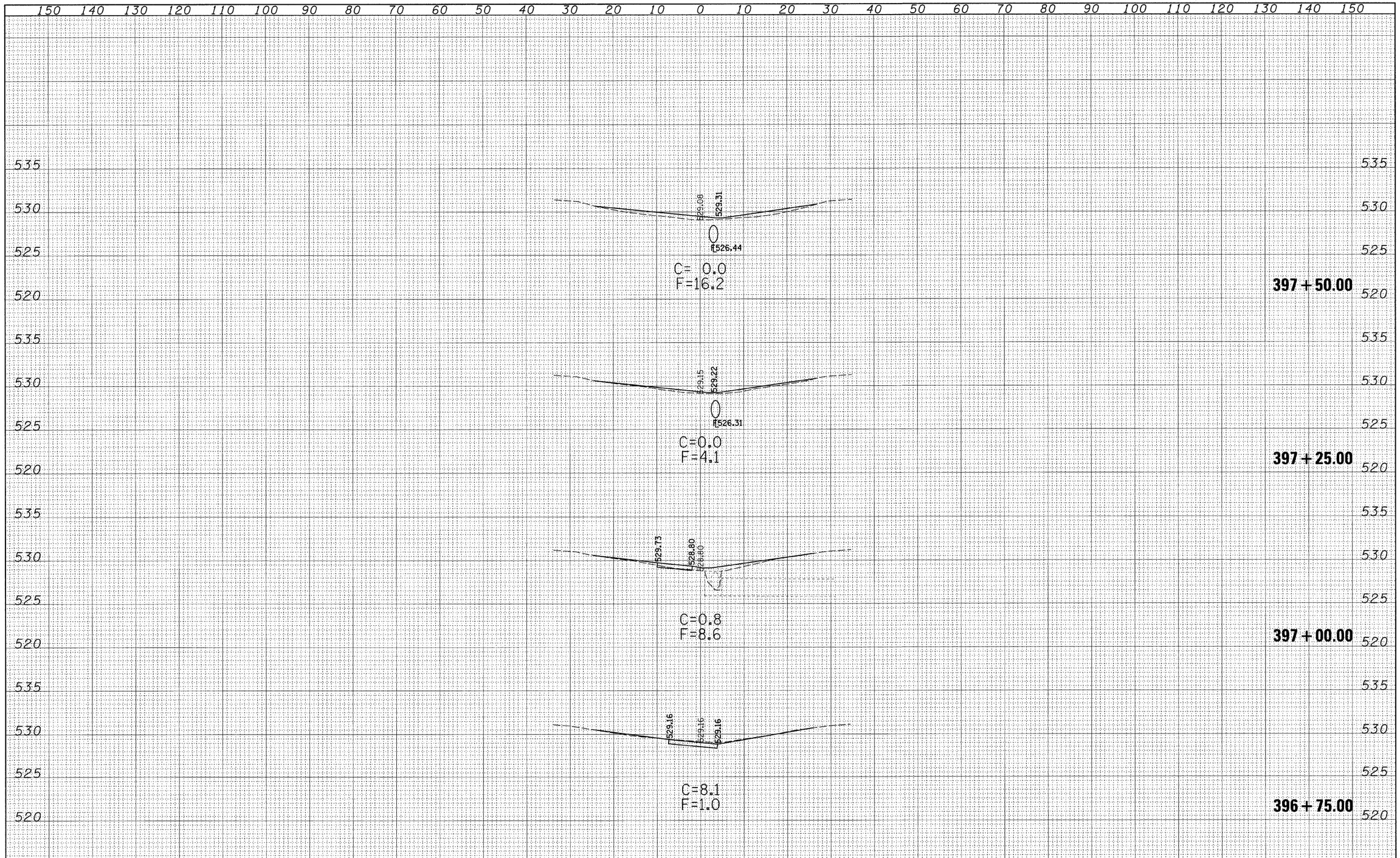

FINAL SURVEY	BY	DATE
SURVEYED		
PLOTTED		
NOTE BOOK TEMPLATE		
AREAS		
AREAS CHECKED		
NO.		

ORIGINAL SURVEY	BY	DATE
SURVEYED		
PLOTTED		
NOTE BOOK TEMPLATE		
AREAS		
AREAS CHECKED		
NO.		

FILE NAME = c:\pw_work\PWIDOT\DAVISONJL\dms36538\xs0007sheet_74313.dgn

USER NAME = davisonjl

PLOT SCALE = 10.0000 ' / IN.

PLOT DATE = 1/20/2009

DESIGNED - JLD	REVISED -	
DRAWN - JLD	REVISED -	
CHECKED -	REVISED -	
DATE -	REVISED -	

STATE OF ILLINOIS
DEPARTMENT OF TRANSPORTATION

CROSS SECTIONS
S.N. 026-0087

SCALE: 10:5 | SHEET NO. 4 OF 6 SHEETS | STA. 396+75.00 TO STA. 397+50.00

F.A.I. RTE.	SECTION	COUNTY	TOTAL SHEETS	SHEET NO.
70	D7 SAFETY 2009-1	FAYETTE	100	96
		CONTRACT NO. 74313		

FED. ROAD DIST. NO. | ILLINOIS | FED. AID PROJECT

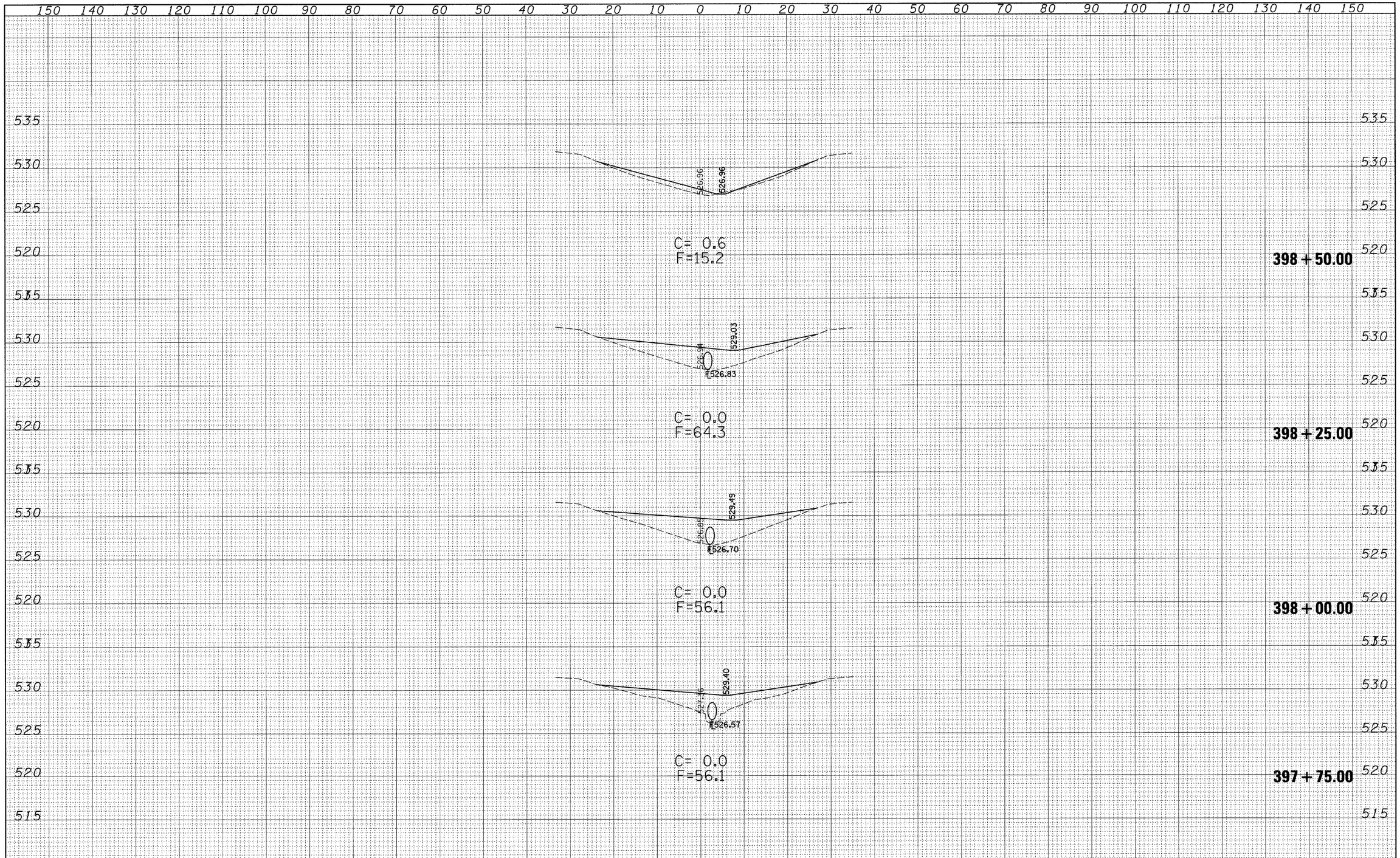

FINAL SURVEY		BY	DATE
NOTE BOOK	SURVEYED		
	PLOTTED		
	TEMPLATE		
NO.	AREAS		
	AREAS CHECKED		

ORIGINAL SURVEY		BY	DATE
NOTE BOOK	SURVEYED		
	PLOTTED		
	TEMPLATE		
NO.	AREAS		
	AREAS CHECKED		

FILE NAME = c:\pw_work\PWIDOT\DAVISONJL\dms36538\xs0087sheet_74313.dgn	USER NAME = davisonjl	DESIGNED - JLD	REVISED -
		DRAWN - JLD	REVISED -
	PLOT SCALE = 10.0000 ' / IN.	CHECKED -	REVISED -
	PLOT DATE = 1/20/2009	DATE -	REVISED -

STATE OF ILLINOIS
DEPARTMENT OF TRANSPORTATION

CROSS SECTIONS
S.N. 026-0087

SCALE: 10:5 | SHEET NO. 5 OF 6 SHEETS | STA. 397+75.00 TO STA. 398+50.00

F.A.I. RTE.	SECTION	COUNTY	TOTAL SHEETS	SHEET NO.
70	D7 SAFETY 2009-1	FAYETTE	100	97
		CONTRACT NO. 74313		

FED. ROAD DIST. NO. | ILLINOIS | FED. AID PROJECT

FINAL SURVEY		BY	DATE
NOTE BOOK	SURVEYED		
	PLOTTED		
	TEMPLATE		
	AREAS		
NO.	AREAS CHECKED		

ORIGINAL SURVEY		BY	DATE
NOTE BOOK	SURVEYED		
	PLOTTED		
	TEMPLATE		
	AREAS		
NO.	AREAS CHECKED		

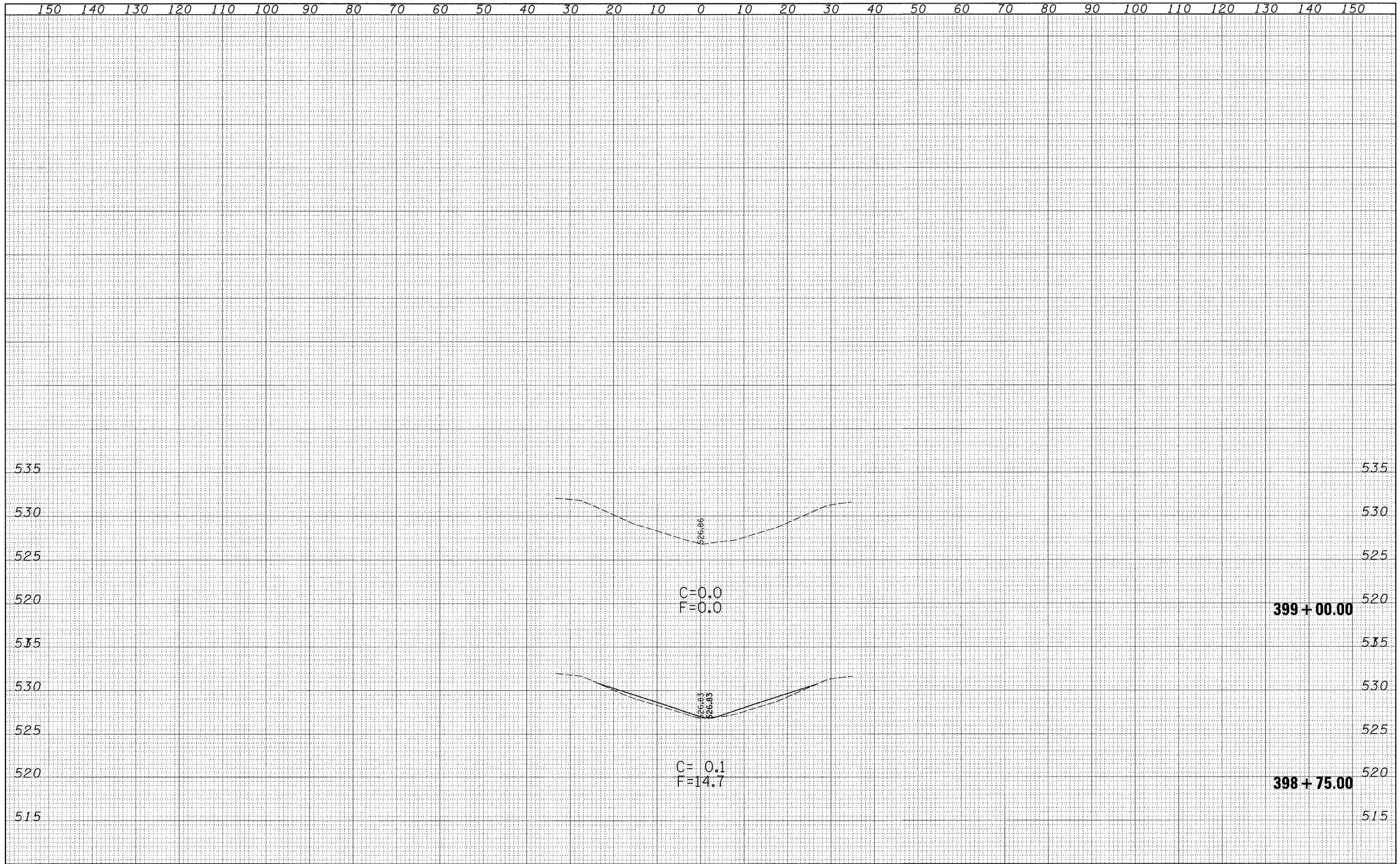

FILE NAME = c:\pw_work\PWIDOT\DAVISONJL\dms36530\xs0007sheet_74313.dgn	USER NAME = davisonjl	DESIGNED - JLD	REVISED -
		DRAWN - JLD	REVISED -
	PLOT SCALE = 10.0000 ' / IN.	CHECKED -	REVISED -
	PLOT DATE = 1/20/2009	DATE -	REVISED -

STATE OF ILLINOIS
DEPARTMENT OF TRANSPORTATION

CROSS SECTIONS
S.N. 026-0087

SCALE: 10:5 | SHEET NO. 6 OF 6 SHEETS | STA. 398+75.00 TO STA. 399+00.00

F.A.I. RTE.	SECTION	COUNTY	TOTAL SHEETS	SHEET NO.
70	D7 SAFETY 2009-1	FAYETTE	100	98
		CONTRACT NO. 74313		

FED. ROAD DIST. NO. | ILLINOIS | FED. AID PROJECT

DETAIL OF IMPACT ATTENUATORS (NON-REDIRECTIVE) TEST LEVEL 3

64' (19.5 m) MEDIAN

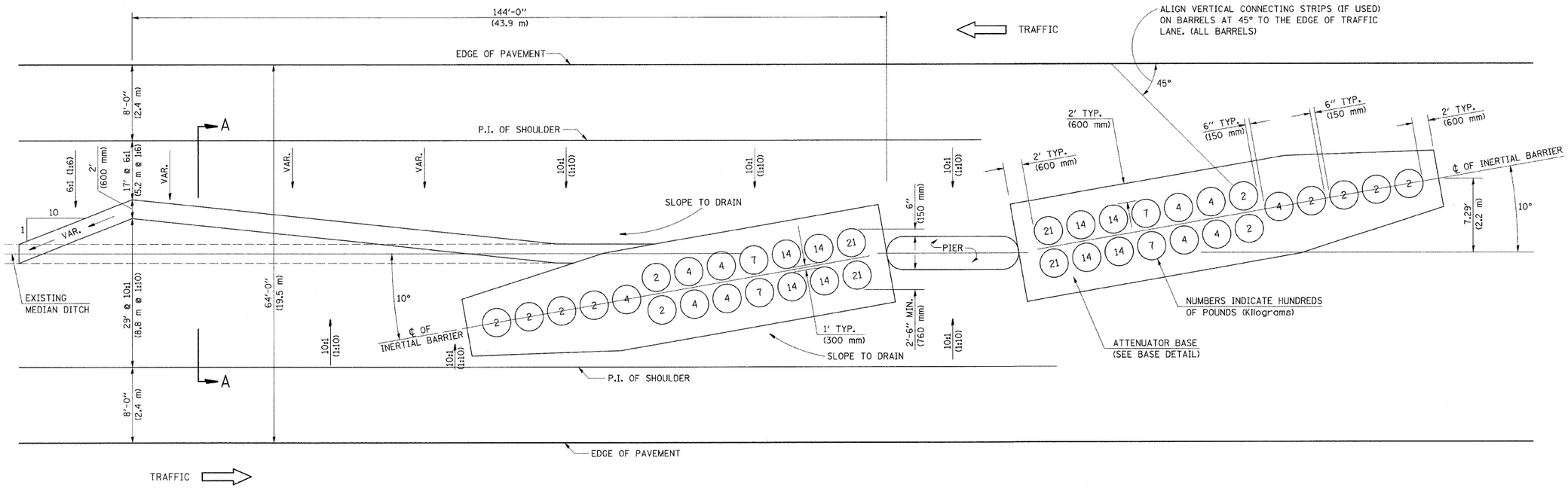

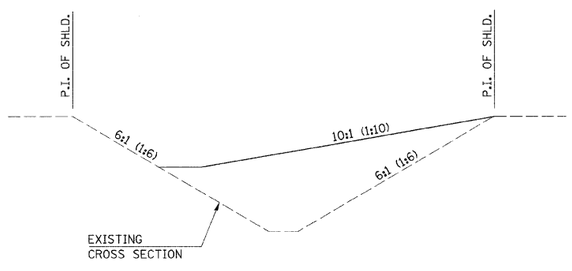

SECTION A-A
GRADING AND SHAPING DETAIL

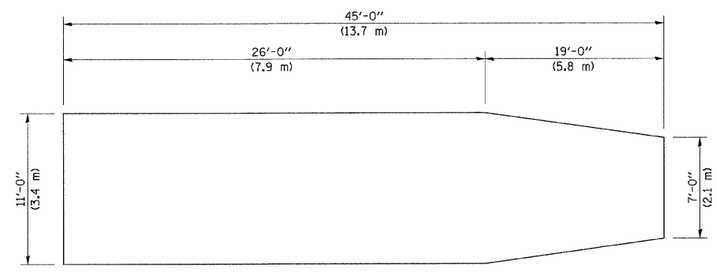

BASE DETAIL

ALL DIMENSIONS ARE IN FEET (METERS) UNLESS OTHERWISE SHOWN.

GENERAL NOTES

1. ALL 10:1 (1:10) SLOPES SHOWN ON THIS DETAIL SHALL BE CONSTRUCTED 10:1 (1:10) OR FLATTER.
2. THE SLOPES AS SHOWN ON THIS DETAIL SHALL APPLY TO BOTH ENDS OF THE BRIDGE PIERS.
3. THE LENGTH X WIDTH OF MODULE LAYOUT IS 41.0' x 7.0': 19 MODULES - 14,400 LBS. (12.5 m x 2.1 m : 19 MODULES - 6532 kg).
4. IN AREAS OF 10:1 (1:10) SLOPES PRECEDING THE ATTENUATOR IN THE MEDIAN INSTALLATION, FOUR OR MORE WOOD POSTS SHALL BE PLACED AT 5' (1.5 m) INTERVALS IN THE MEDIAN ℄. SEE SPECIAL PROVISIONS AND SCHEDULES.

FILE NAME = c:\pw_work\pwidot\swartzrw\dms50720\shtdetails.dgn	USER NAME = swartzrw	DESIGNED - JLD	REVISED -
		DRAWN - RWS	REVISED -
	PLOT SCALE = 20.0000 ' / IN.	CHECKED - DHR	REVISED -
	PLOT DATE = 1/20/2009	DATE - 01-08	REVISED -

STATE OF ILLINOIS
DEPARTMENT OF TRANSPORTATION

IMPACT ATTENUATOR DETAIL (64')

SCALE: NA | SHEET NO. 1 OF 2 SHEETS | STA. | TO STA.

F.A.I RTE.	SECTION	COUNTY	TOTAL SHEETS	SHEET NO.
70	D7 SAFETY 2009-1	FAYETTE	100	99

CONTRACT NO. 74313

FED. ROAD DIST. NO. | ILLINOIS | FED. AID PROJECT

DETAIL OF IMPACT ATTENUATORS (NON-REDIRECTIVE) TEST LEVEL 3

70' (21 m) MEDIAN

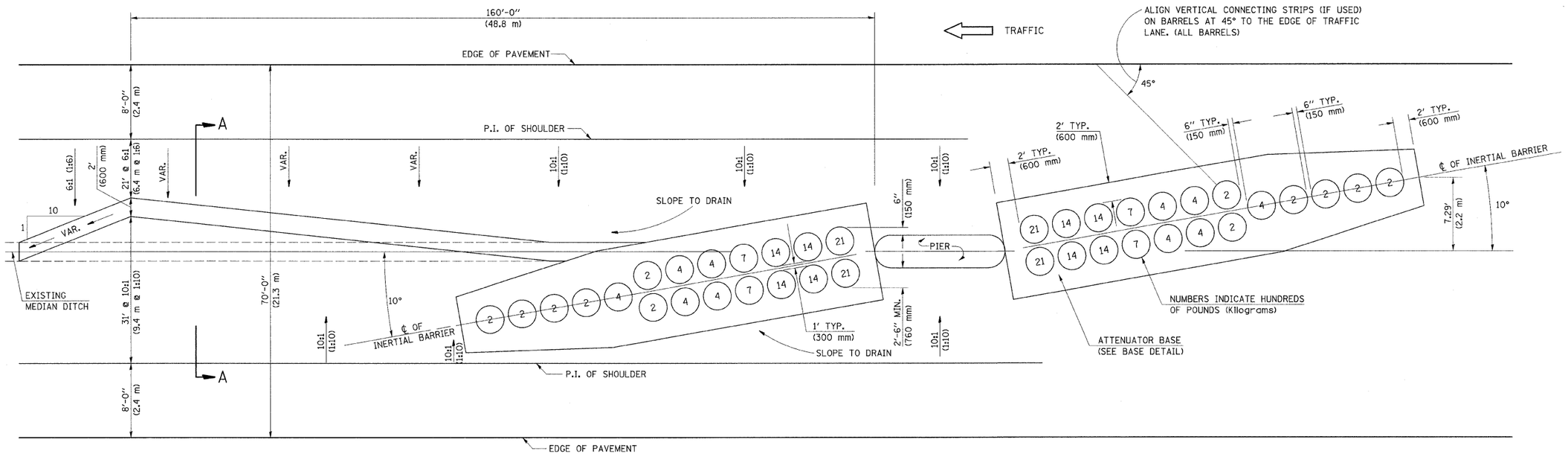

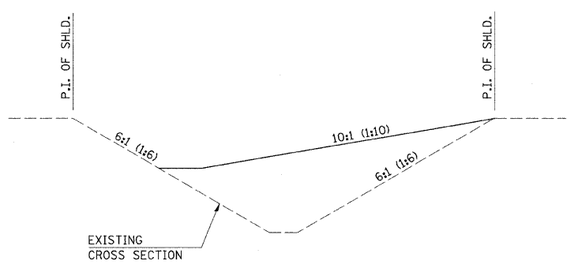

SECTION A-A
GRADING AND SHAPING DETAIL

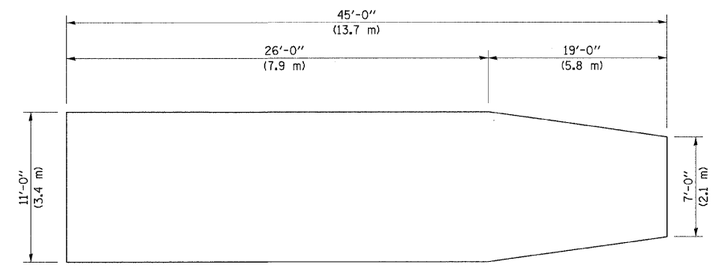

BASE DETAIL

GENERAL NOTES

1. ALL 10:1 (1:10) SLOPES SHOWN ON THIS DETAIL SHALL BE CONSTRUCTED 10:1 (1:10) OR FLATTER.
2. THE SLOPES AS SHOWN ON THIS DETAIL SHALL APPLY TO BOTH ENDS OF THE BRIDGE PIERS.
3. THE LENGTH X WIDTH OF MODULE LAYOUT IS 41.0' x 7.0': 19 MODULES - 14,400 LBS.
   (12.5 m x 2.1 m : 19 MODULES - 6532 kg).
4. IN AREAS OF 10:1 (1:10) SLOPES PRECEDING THE ATTENUATOR IN THE MEDIAN INSTALLATION, FOUR OR MORE WOOD POSTS SHALL BE PLACED AT 5' (1.5 m) INTERVALS IN THE MEDIAN ℄. SEE SPECIAL PROVISIONS AND SCHEDULES.

FILE NAME = c:\pw_work\pwidot\swartzrw\dms50728\sht0etails.dgn	USER NAME = swartzrw	DESIGNED -	REVISED -	STATE OF ILLINOIS DEPARTMENT OF TRANSPORTATION	IMPACT ATTENUATOR DETAIL (70')	F.A.I RTE.	SECTION	COUNTY	TOTAL SHEETS	SHEET NO.
		DRAWN -	REVISED -			70	D-7 SAFETY 2009-1	FAYETTE	100	100
	PLOT SCALE = 20.0000 ' / IN.	CHECKED -	REVISED -					CONTRACT NO. 74313		
	PLOT DATE = 1/20/2009	DATE -	REVISED -		SCALE: NA / SHEET NO. 2 OF 2 SHEETS / STA. TO STA.	FED. ROAD DIST. NO.	ILLINOIS	FED. AID PROJECT		