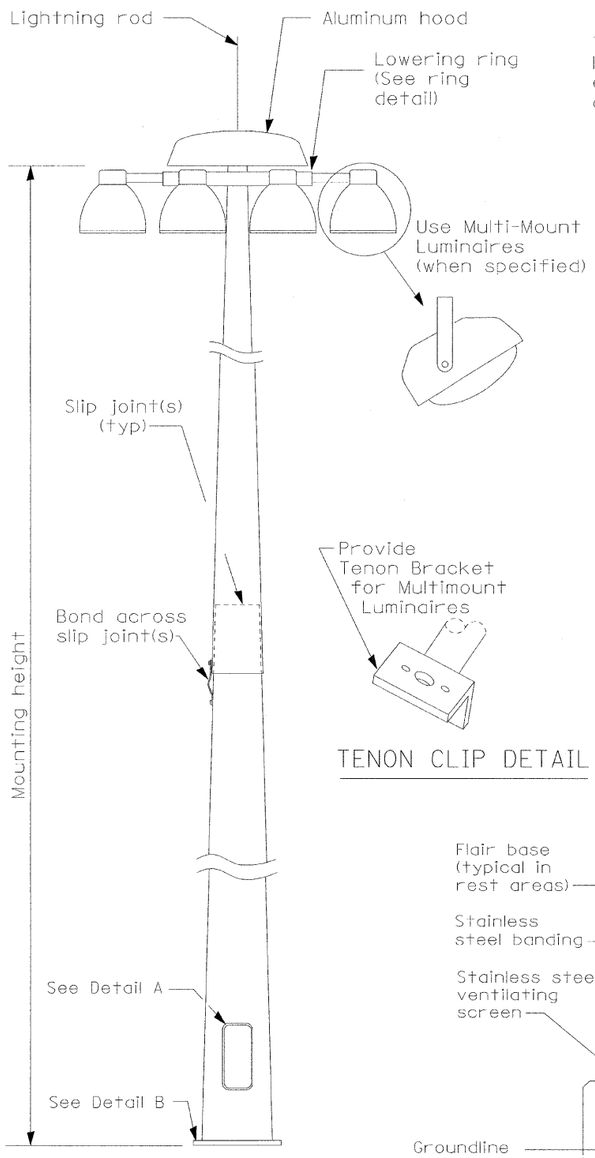

HIGH MAST POLE

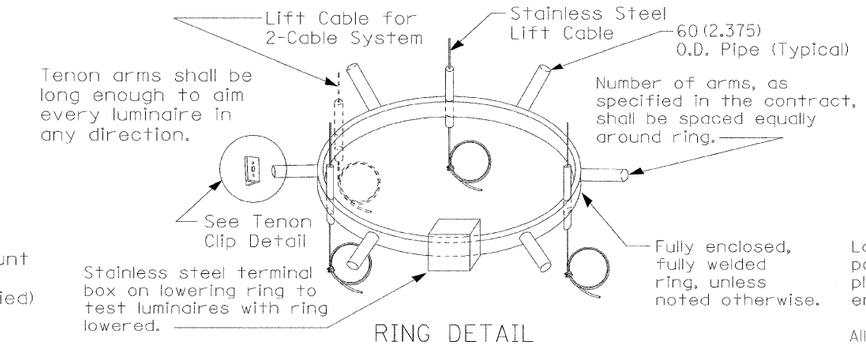

RING DETAIL

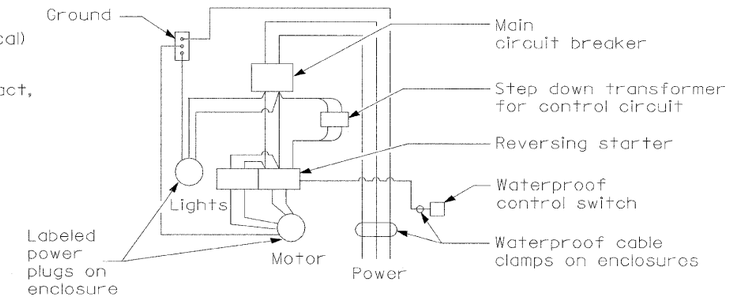

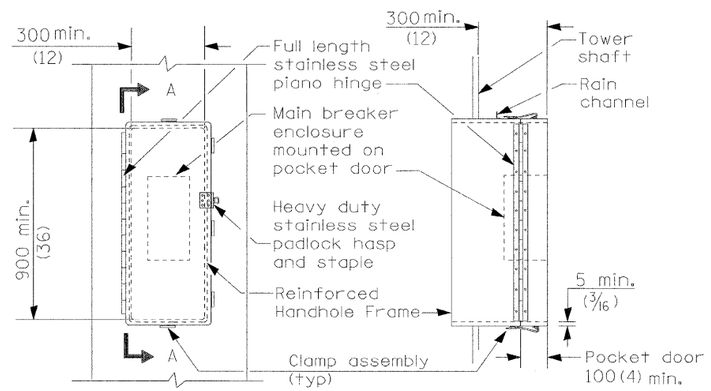

DETAIL A

SECTION A-A

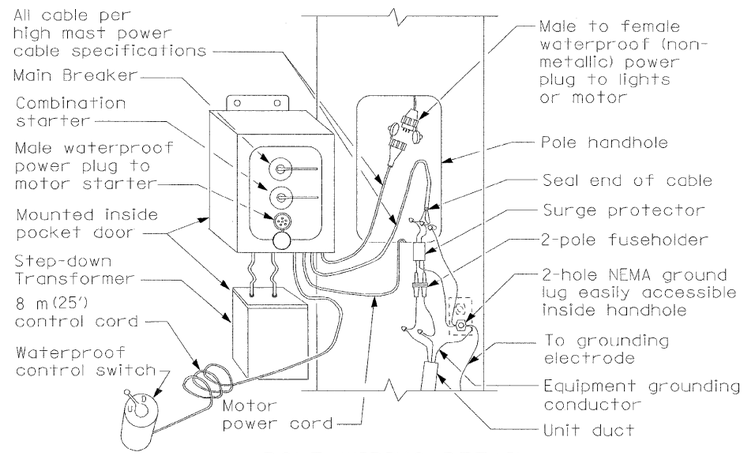

POLE WIRING DETAIL

TENON CLIP DETAIL

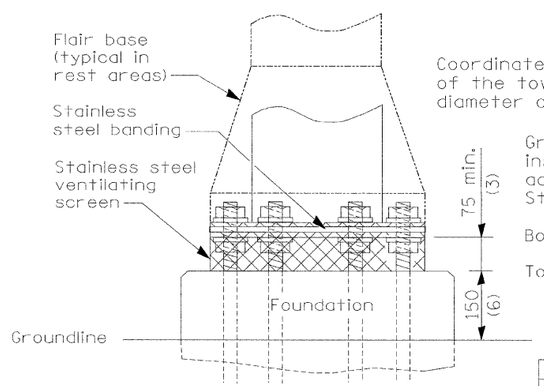

DETAIL B

GENERAL NOTES

1) Luminaires shall be aimed as shown on the aiming schedule in the plans and as directed by the Engineer.
2) Handhole door shall have a minimum of one clamp assembly on top and bottom and a minimum of three clamp assemblies on the non-hinged side of the door.
3) Provide racks to house all wiring so cables are neatly stored and the handhole door is not closing against a random lay of cables.
4) Verify adequate clearance exists to open and close the handhole door with no conflict of the main breaker panel which is mounted to the inside of the door.
5) The luminaire ring shall be balanced so it lowers evenly.
6) Manufacturer of lowering device shall factory wire the winch drive electrical control system. Cable attachment to plugs and polarity must be observed to prevent faults to ground when plugs are changed between lights and motor circuits. Alternate schemes shall be approved by the Engineer.

All dimensions are in millimeters (inches) unless otherwise shown.

LT-16

HIGH MAST TOWER SCHEDULE

TOWER*	LOCATION	STATION	OFFSET	HEIGHT	TYPE	* LUMS	WATTAGE	REMARKS

DATE	REVISIONS
	Corrected 4/4/06

HIGH MAST LIGHT TOWER

LGT010

Not to scale

lgt010.dgn 3/30/2009 8:37:13 AM