4-24-09 Letting, Item 074

C.H.	SECTION	COUNTY	TOTAL SHEETS	SHEET NO.
4	06-00061-00-BR	EDWARDS	13	1
FED. ROAD DIST. NO. 7	ILLINOIS	FED. AID PROJECT		
PROJECT # BROS-047(031)		CONTRACT # 95571		
LEC JOB # H081L008ED		WEST VILLAGE CREEK		

STATE OF ILLINOIS
DEPARTMENT OF TRANSPORTATION
PLANS FOR PROPOSED
FEDERAL AID – H.B.P. PROJECT

C.H. 4 EDWARDS COUNTY SECTION 06–00061–00–BR

PROJECT NO. BROS–047(031) JOB NO. C–97–071–09

CONTRACT #95571 WEST VILLAGE CREEK

INDEX OF SHEETS

SHEET NO.	DESCRIPTION
1	TITLE SHEET & SUMMARY OF QUANTITIES
2	PLAN & PROFILE, TYPICAL SECTIONS, GENERAL NOTES & STONE RIPRAP DITCH DESIGN
3-4	ROADWAY CROSS SECTIONS
5-13	BRIDGE DESIGN

STANDARDS

000001-05	STANDARD SYMBOLS, ABBREVIATIONS & PATTERNS (8 SHEETS)
280001-04	TEMPORARY EROSION CONTROL SYSTEMS (2 SHEETS)
666001-01	RIGHT OF WAY MARKERS
701901-01	TRAFFIC CONTROL DEVICES (3 SHEETS)
B.L.R. 21-8	TYPICAL APPLICATION OF TRAFFIC CONTROL DEVICES FOR CONSTRUCTION ON RURAL LOCAL HIGHWAYS
B.L.R. 22-6	TYPICAL APPLICATION OF TRAFFIC CONTROL DEVICES FOR CONSTRUCTION ON RURAL LOCAL HIGHWAYS (TWO-LANE TWO-WAY RURAL TRAFFIC) (ROAD CLOSED TO THRU TRAFFIC)

SUMMARY OF QUANTITIES

X081-2A

QUANTITY	UNIT	ITEM	CODE NO.
710.00	CU YD	EARTH EXCAVATION	20200100
348.00	CU YD	CHANNEL EXCAVATION	20300100
126.00	CU YD	FURNISHED EXCAVATION	20400800
0.60	ACRE	SEEDING, CLASS 2 (SPECIAL)	25001000
7.00	EACH	TEMPORARY DITCH CHECKS	28000300
16.00	TON	AGGREGATE (EROSION CONTROL)	28001000
300.00	TON	STONE DUMPED RIPRAP, CLASS A4	28100807
35.00	TON	STONE RIPRAP DITCH	28102600
365.00	TON	AGGREGATE SURFACE COURSE, TYPE B	40200800
1.00	EACH	REMOVAL OF EXISTING STRUCTURES	50100100
23.60	CU YD	CONCRETE STRUCTURES	50300225
2.80	CU YD	CONCRETE ENCASEMENT	50300280
1536.00	SQ FT	PRECAST PRESTRESSED CONCRETE DECK BEAMS (27" DEPTH)	50400505
2520.00	POUND	REINFORCEMENT BARS	50800105
123.00	FOOT	STEEL RAILING, TYPE S1	50900205 *
560.00	FOOT	FURNISHING STEEL PILES HP12X53	51201600
560.00	FOOT	DRIVING PILES	51202305
1.00	EACH	NAME PLATES	51500100
40.00	FOOT	PIPE CULVERTS, CLASS D, TYPE 1 36"	542D0241
10.00	EACH	FURNISHING AND ERECTING RIGHT-OF-WAY MARKERS	66600105
1.00	L SUM	MOBILIZATION	67100100

* SPECIALTY ITEMS

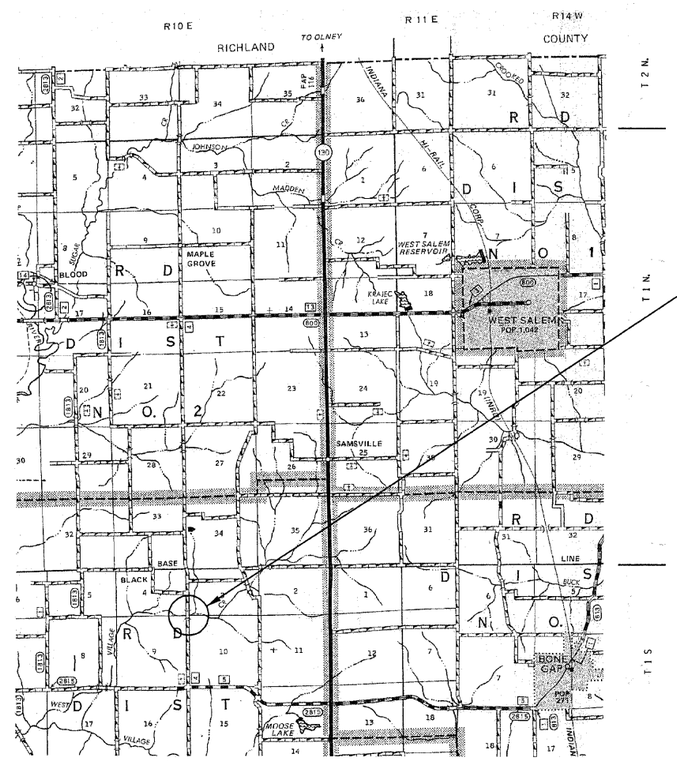

N

LAYOUT
APPROXIMATE SCALE 1 INCH = 1 MILE
0 1 2 3
MILES

GROSS LENGTH	575.00 FT	0.109 MILES
OMISSIONS	0.00 FT	0.00 MILES
NET LENGTH	575.00 FT	0.109 MILES

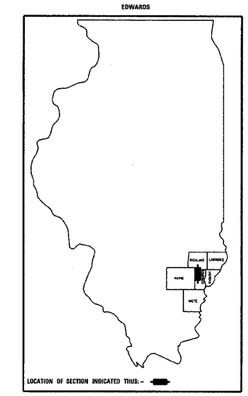

PLAN 1"= 50' 0 50' 100'

PROFILE 1"= 50' 0 50' 100'

PROFILE VERT. 1"= 5' 0 5' 10'

SECTION 06-00061-00-BR
BEGINS STATION 2+00

STATION 5+00, STRUCTURE NO. 024-3136
A 64' LONG SINGLE SPAN PRECAST
PRESTRESSED CONCRETE DECK BEAM BRIDGE
(27" DEPTH), 24' ROADWAY, 0° SKEW.

SECTION 06-00061-00-BR
ENDS STATION 7+75

DESIGN DESIGNATION:
DESIGN SPEED: 30 MPH
HIGHWAY CLASS - LOCAL ROAD
EXISTING STRUCTURE NO.: 024-3082
PROPOSED STRUCTURE NO.: 024-3136
CURRENT A.D.T. = 200
CONTRACT NO. 95571

WARNING
CALL JULIE TOLL FREE 1-800-892-0123
CALL 811 BEFORE YOU DIG

APPROVED JAN. 28TH 20 09
COUNTY ENGINEER

PASSED 2/5 20 09
DISTRICT SEVEN ENGINEER OF LOCAL ROADS & STREETS

Releasing For Bid Based on Limited Review 2/5 20 09
DEPUTY DIRECTOR OF HIGHWAYS, REGION FOUR ENGINEER

STATE OF ILLINOIS
DEPARTMENT OF TRANSPORTATION

323 W. 3RD ST.
P.O. BOX 160
MT. CARMEL, IL
62863
PHONE:
(618)-262-8651
FAX:
(618)-263-3327

405 W. STATE ST.
SUITE1
PRINCETON, IN
47670
PHONE:
(812)-386-7611
FAX:
(812)-385-2812

LAMC ENGINEERING CO.

PROFESSIONAL DESIGN FIRM
LAND SURVEY & PROFESSIONAL ENGINEERING CORPORATION
184-000887
(62-032435)(35-002769)

AARON M. MEFFORD
56284
REGISTERED PROFESSIONAL ENGINEER OF ILLINOIS

AARON M. MEFFORD
NAME
SIGNATURE
1-27-09
DATE
11-30-09
EXPIRES

WEST VILLAGE CREEK
COUNTY HIGHWAY 4
EDWARDS COUNTY, ILLINOIS

SHEET TITLE:
TITLE SHEET

SCALE:	VARIES
BY:	AMM
DATE:	1/28/09
REV:	

1 OF 13 SHEETS

SHEET NO. 1

C.H.	SECTION	COUNTY	TOTAL SHEETS	SHEET NO.
4	06-00061-00-BR	EDWARDS	13	2
FED. ROAD DIST. NO. 7	ILLINOIS	WEST VILLAGE CREEK		

LEC JOB # H081L008ED

323 W. 3RD ST.
P.O. BOX 160
MT. CARMEL, IL
62863
PHONE:
(618)-262-8651
FAX:
(618)-263-3327

405 W. STATE ST.
SUITE1
PRINCETON, IN
47670
PHONE:
(812)-386-7611
FAX:
(812)-385-2812

LAMC ENGINEERING CO.

PROFESSIONAL DESIGN FIRM
LAND SURVEY & PROFESSIONAL ENGINEERING CORPORATION
184-000887
(62-032435)(35-002769)

AARON M. MEFFORD
56284
REGISTERED PROFESSIONAL ENGINEER OF ILLINOIS

AARON M. MEFFORD
NAME
SIGNATURE
1-27-09
DATE
11-30-09
EXPIRES

GENERAL NOTES:

THIS SECTION SHALL BE CONSTRUCTED IN ACCORDANCE WITH THE PLANS, SPECIAL PROVISIONS AND "STANDARD SPECIFICATIONS FOR ROAD AND BRIDGE CONSTRUCTION", ADOPTED JANUARY 1, 2007.

THE WORK INVOLVED ON THIS SECTION CONSISTS OF THE REMOVAL OF THE EXISTING STRUCTURE, THE CONSTRUCTION OF A 64 FOOT LONG SINGLE SPAN PRECAST, PRESTRESSED CONCRETE DECK BEAM BRIDGE, EARTH APPROACHES, AGGREGATE SURFACE COURSE AND OTHER MISCELLANEOUS ITEMS NECESSARY TO COMPLETE THIS SECTION.

ALL ELEVATIONS ARE BASED ON U.S.G.S. MEAN SEA LEVEL DATUM.

IT SHALL BE THE CONTRACTOR'S RESPONSIBILITY TO CONTACT ALL THE UTILITIES, AFFECTING THE PROJECT, PRIOR TO CONSTRUCTION.

TYPICAL CROSS SECTION PROPOSED

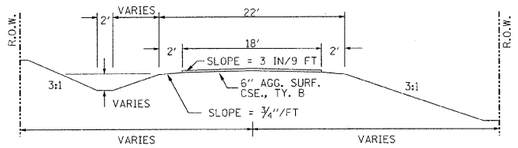

TYPICAL CROSS SECTION EXISTING

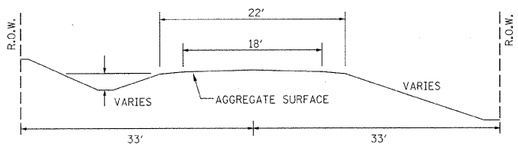

UTILITIES:

J.U.L.I.E. 1-800-892-0123

VERIZON
1-618-395-6191

WAYNE-WHITE ELECRIC CO-OP
1-618-842-2196

FIELD ENTRANCE DETAIL

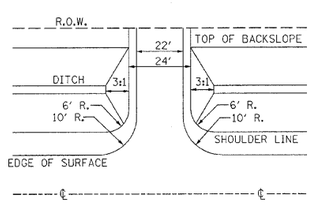

NOTE: CONSTRUCT SPECIAL DITCH

STA 3+00 TO STA 4+74.6 LT
STA 3+00 TO STA 4+75.8 RT
STA 5+24.2 TO STA 7+00 LT
STA 5+25 TO STA 7+50 RT

NOTE: CONSTRUCT STONE RIPRAP DITCH

STA 5+24 LT TO STA 5+80 LT (0.62 TON/LIN FT)
35 TON STONE RIPRAP DITCH ALLOWED IN PROPOSAL.

STONE RIPRAP DITCH DESIGN

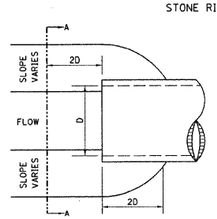

Plan

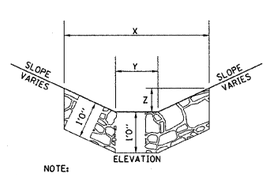

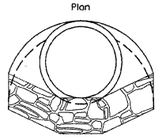

Section A-A

NOTE:

BOTTOM OF DITCH		SLOPE 1 1/2:1	2:1	3:1	
2 FT	X=	5 FT	6 FT	8 FT	
	Y=	2 FT	2 FT	2 FT	
	Z=	1 FT	1 FT	1 FT	
		0.40	0.48	0.62	TON/LIN. FT

NOTE: FOR PLACEMENT, QUALITY GRADATION AND OTHER MISCELLANEOUS REQUIREMENTS FOR STONE RIPRAP DITCH-SEE SPECIAL PROVISIONS.

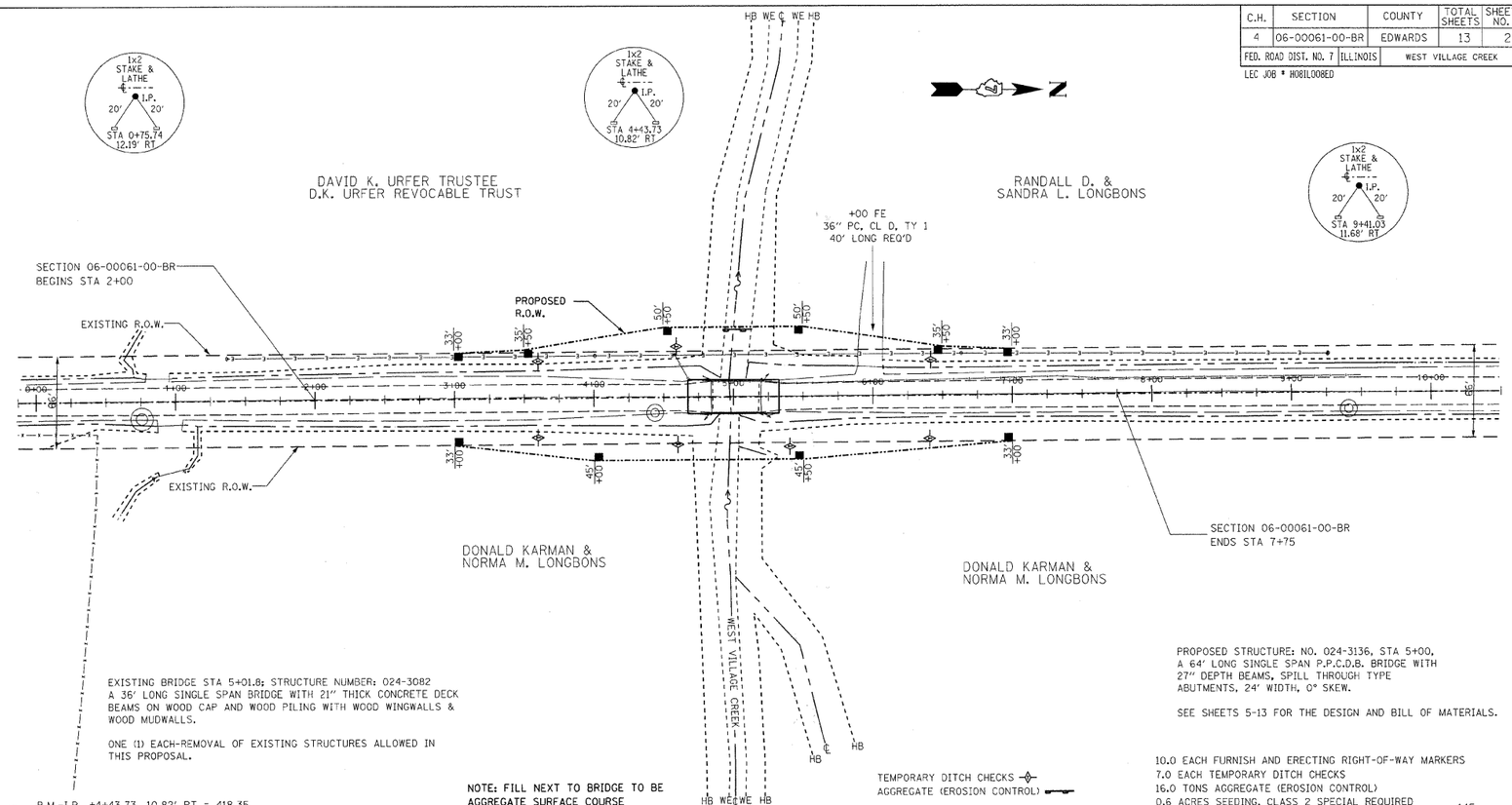

EXISTING BRIDGE STA 5+01.8; STRUCTURE NUMBER: 024-3082
A 36' LONG SINGLE SPAN BRIDGE WITH 21" THICK CONCRETE DECK BEAMS ON WOOD CAP AND WOOD PILING WITH WOOD WINGWALLS & WOOD MUDWALLS.

ONE (1) EACH-REMOVAL OF EXISTING STRUCTURES ALLOWED IN THIS PROPOSAL.

PROPOSED STRUCTURE: NO. 024-3136, STA 5+00,
A 64' LONG SINGLE SPAN P.P.C.D.B. BRIDGE WITH 27" DEPTH BEAMS, SPILL THROUGH TYPE ABUTMENTS, 24' WIDTH, 0° SKEW.

SEE SHEETS 5-13 FOR THE DESIGN AND BILL OF MATERIALS.

NOTE: FILL NEXT TO BRIDGE TO BE AGGREGATE SURFACE COURSE

TEMPORARY DITCH CHECKS
AGGREGATE (EROSION CONTROL)

10.0 EACH FURNISH AND ERECTING RIGHT-OF-WAY MARKERS
7.0 EACH TEMPORARY DITCH CHECKS
16.0 TONS AGGREGATE (EROSION CONTROL)
0.6 ACRES SEEDING, CLASS 2 SPECIAL REQUIRED

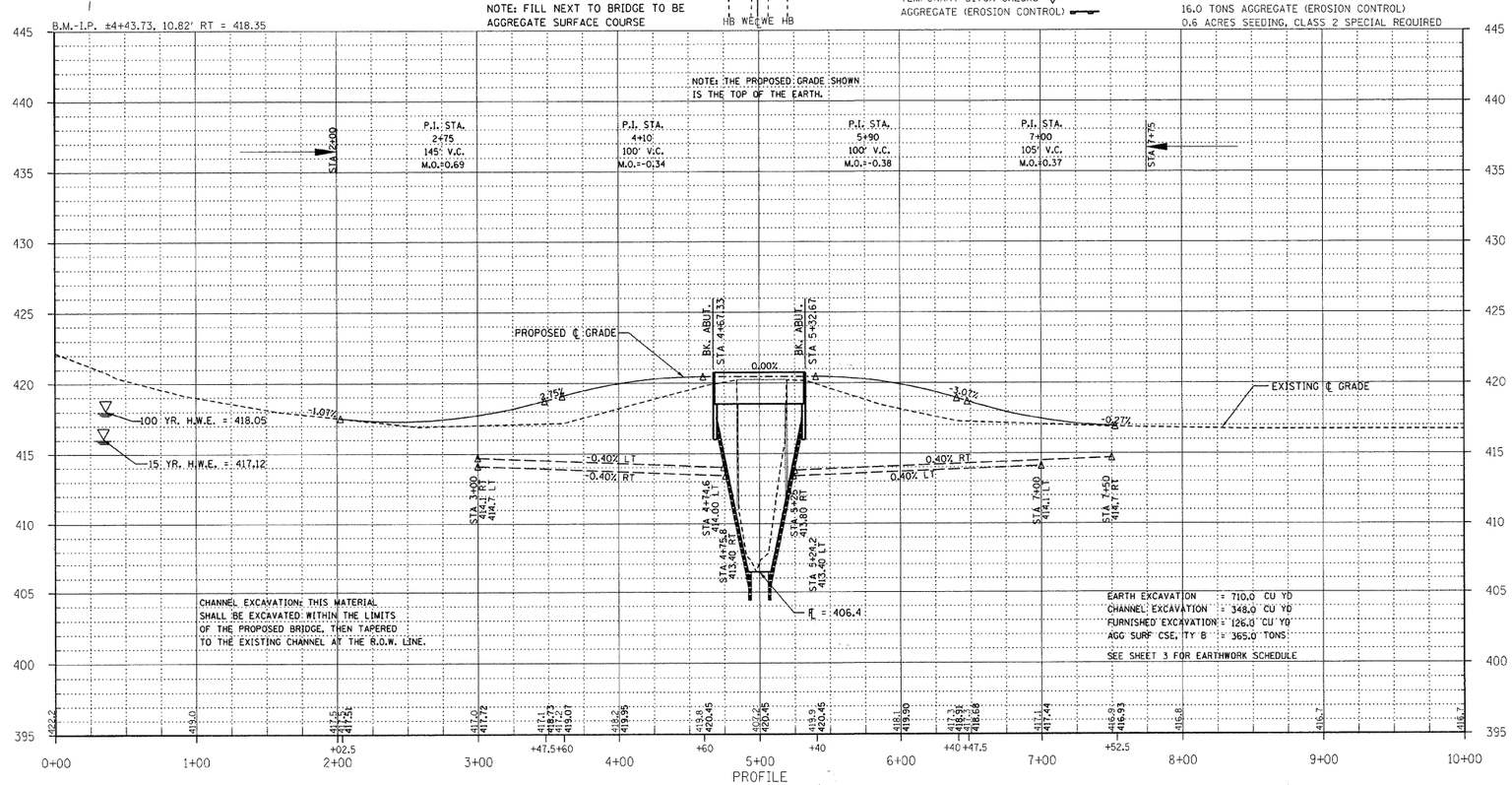

WEST VILLAGE CREEK
COUNTY HIGHWAY 4
EDWARDS COUNTY, ILLINOIS

SHEET TITLE:	PLAN & PROFILE
SCALE:	VARIES
BY:	AMM
DATE:	112408
REV:	

2 OF 13 SHEETS

SHEET NO. 2

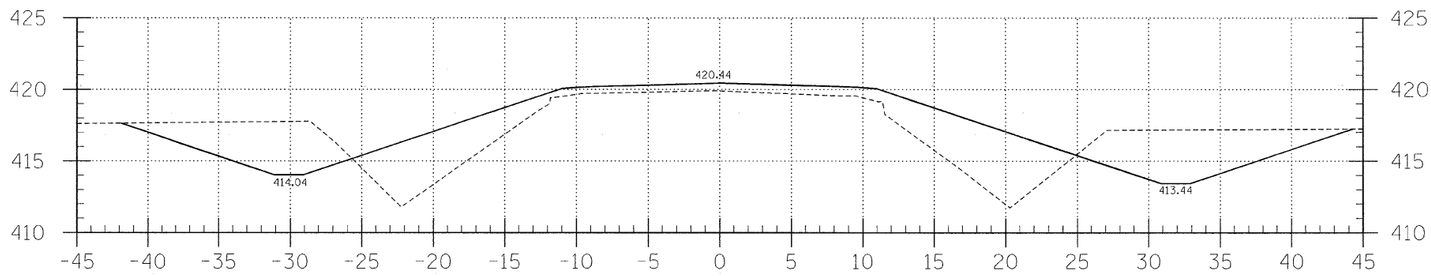

4+65

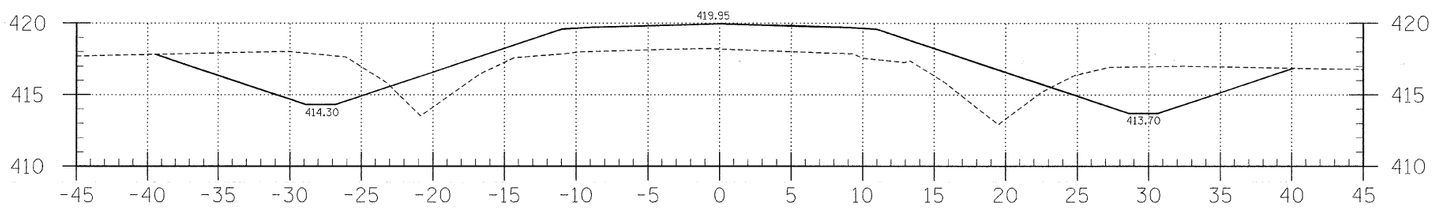

4+00

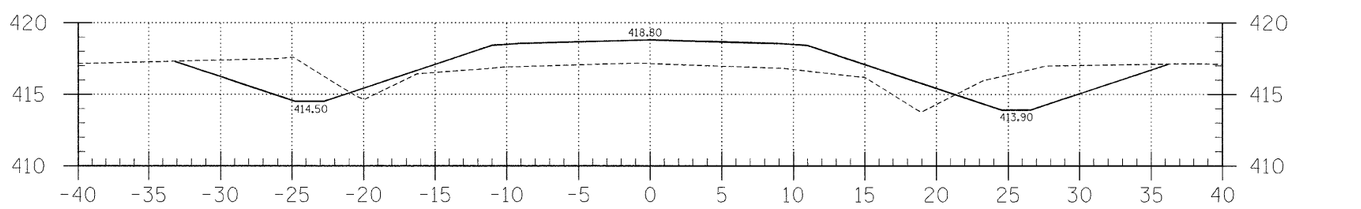

3+50

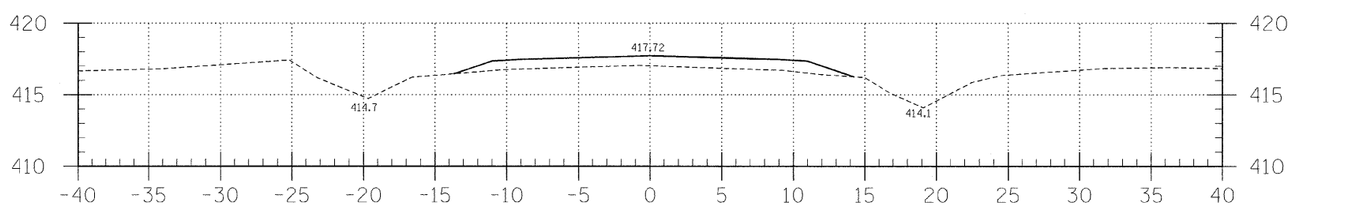

3+00

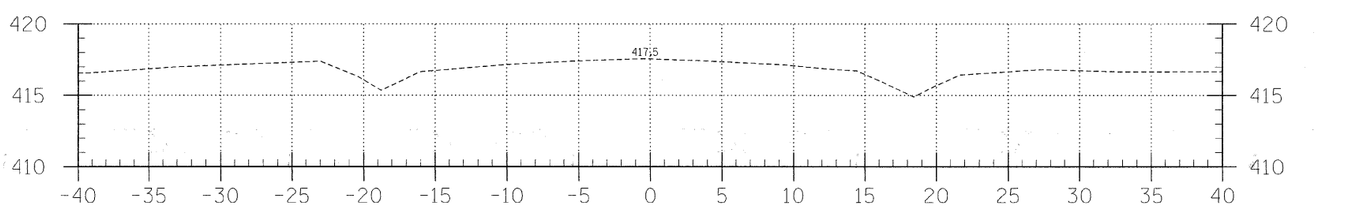

2+00

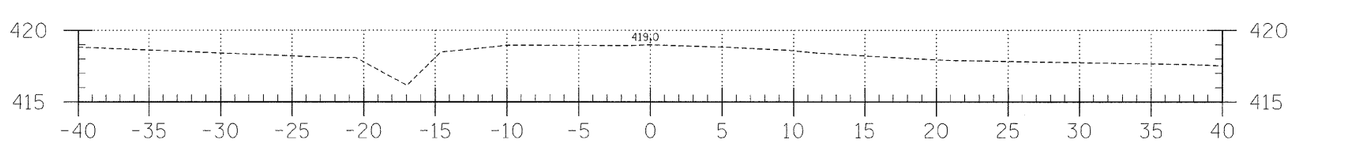

1+00

EARTHWORK SCHEDULE

LOCATION	EARTH EXCAVATION	CHANNEL EXCAVATION	ESTIMATED UNSUITABLE MATERIAL	SUITABLE MATERIAL ADJUSTED FOR SHRINKAGE	EMBANKMENT	EARTHWORK BALANCE WASTE (+) OR SHORTAGE (-)
	CUBIC YARD	CUBIC YARD	CUBIC YARD	CUBIC YARD	CUBIC YARD	CUBIC YARD
STA 0+00 TO 4+67.3	312.2	0.0	0.0	234.1	442.6	-208.5
STA 4+67.3 TO 5+32.7	0.0	348.3	174.1	130.7	0.0	130.7
STA 5+32.7 TO 10+00	398.2	0.0	0.0	298.6	330.9	-32.3
1 FIELD ENTRANCE	0.0	0.0	0.0	0.0	15.8	-15.8
TOTAL	710.4	348.3	174.1	663.4	789.3	-125.9

C.H.	SECTION	COUNTY	TOTAL SHEETS	SHEET NO.
4	DG-00061-00-BR	EDWARDS	13	3
FED. ROAD DIST. NO. 7 ILLINOIS		FED. AID PROJECT		
PROJECT# BROS-0470(31)		CONTRACT# 95571		
JOB NO. C-97-071-09		WEST VILLAGE CREEK		

LSC 069 #N0010060

LAMAC ENGINEERING CO.
405 W. STATE ST.
SUITE 1
MONTICELLO, IN
47670
PHONE:
(812)-386-7611
FAX:
(812)-385-2812

3823 W. 3RD ST.
P.O. BOX 160
PITTSFIELD, IL
62363
PHONE:
(618)-262-8651
FAX:
(618)-263-3327

PROFESSIONAL DESIGN FIRM
LAND SURVEY & HYDROLOGY/AVIL ENGINEERING CORPORATION
184-000887
(02-0024630)(S-002769)

AARON M. MEEFORD
NAME
SIGNATURE
1-27-09
DATE
1/30/09
EXPIRES

WEST VILLAGE CREEK
COUNTY HIGHWAY 4
EDWARDS COUNTY, ILLINOIS

SHEET TITLE: CROSS-SECTIONS

SCALE: 1" = 5'
BY: AMM
DATE: 10/09
REV:

SHEETS 3 OF 13

SHEET NO. 3

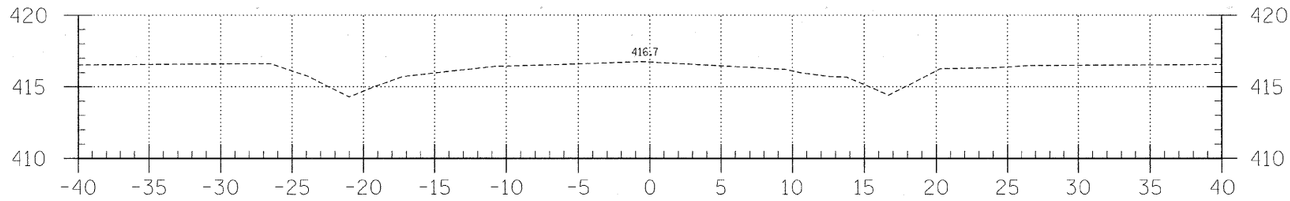

9+00

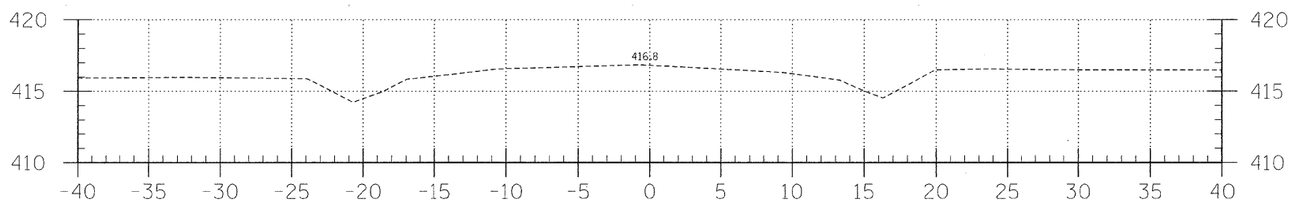

8+00

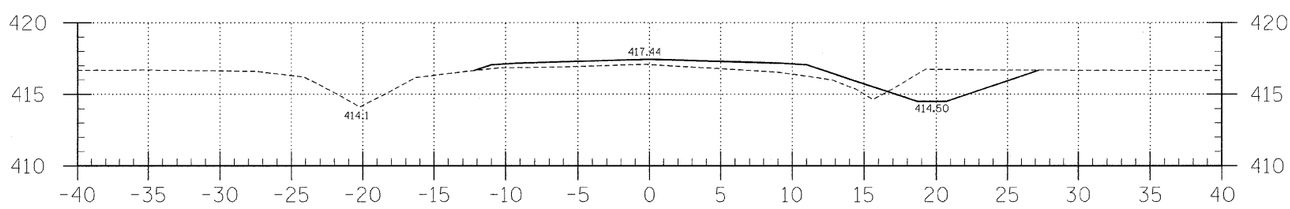

C = 13.6

F = 13.2

7+00

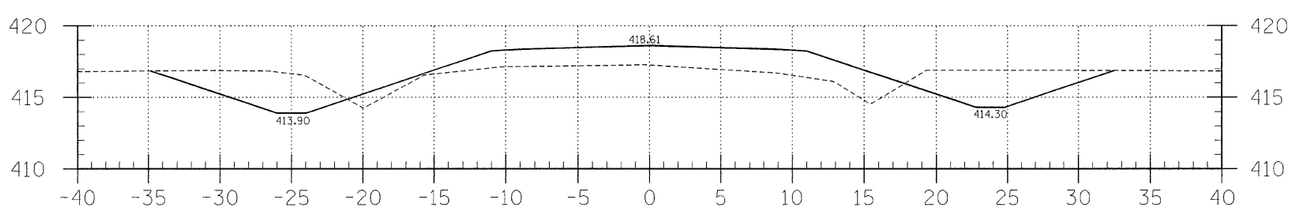

C = 45.4

F = 47.7

6+50

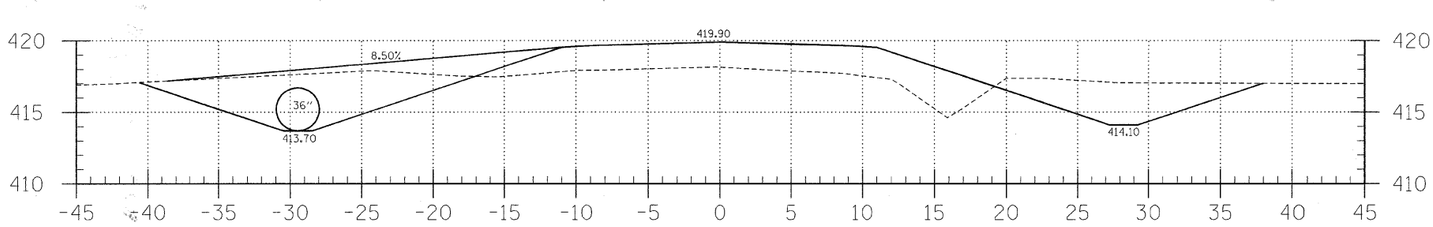

C = 84.8

F = 63.1

6+00

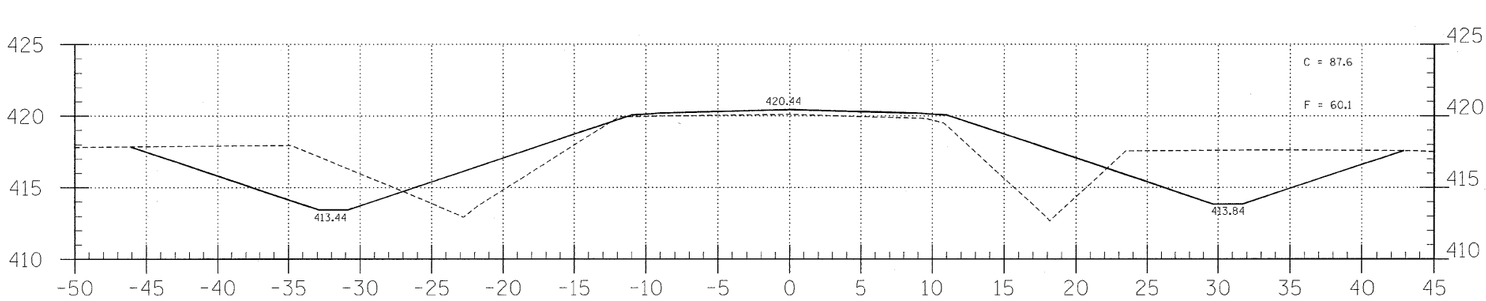

C = 87.6

F = 60.1

5+35

C.H.	SECTION	COUNTY	TOTAL SHEETS	SHEET NO.
4	06-00061-00-BR	EDWARDS	13	4
FED. ROAD DIST. NO. 7 ILLINOIS		FED. AID PROJECT		
PROJECT# BROS-0470031		CONTRACT# 95571		
JOB NO. C-97-071-09		WEST VILLAGE CREEK		
LOC JOB # H08L0060				

PROFESSIONAL DESIGN FIRM
LAND SURVEY & PROFESSIONAL ENGINEERING CORPORATION
188-000889
(QC-0240)(35-002780)

405 W. STATE ST.
SUITE1
HUNTINGTON, IN
47670
PHONE:
(812)-386-7611
FAX:
(812)-385-2812

LAMAC ENGINEERING CO.

323 W. 3RD ST.
P.O. BOX 160
MT. CARMEL, IL
62863
PHONE:
(618)-262-8651
FAX:
(618)-263-3327

AARON M. MEFFORD
NAME

SIGNATURE

1-27-09
DATE

1/30/09
EXPIRES

AARON M. MEFFORD
056284
LICENSED PROFESSIONAL ENGINEER OF ILLINOIS

WEST VILLAGE CREEK
COUNTY HIGHWAY 4
EDWARDS COUNTY, ILLINOIS

SHEET TITLE:
CROSS-SECTIONS

SCALE: 1" = 5'
BY: AMM
DATE: 1/2009
REV:

SHEETS 4 OF 13

SHEET NO. 4

EXISTING STRUCTURE: Sta. 5+01.8 - Single span precast deck beam bridge on closed timber abutment and timber wingwalls.
36.0' bk. - bk.; 22.0' o. to o. deck
Structure closed to traffic.

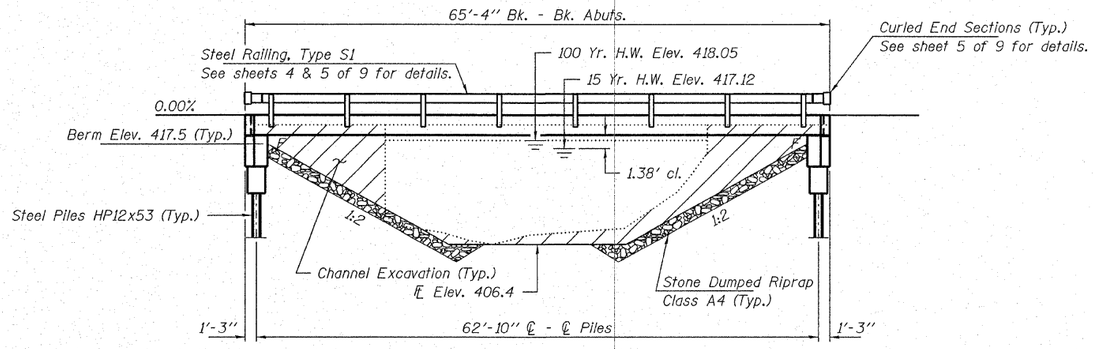

ELEVATION

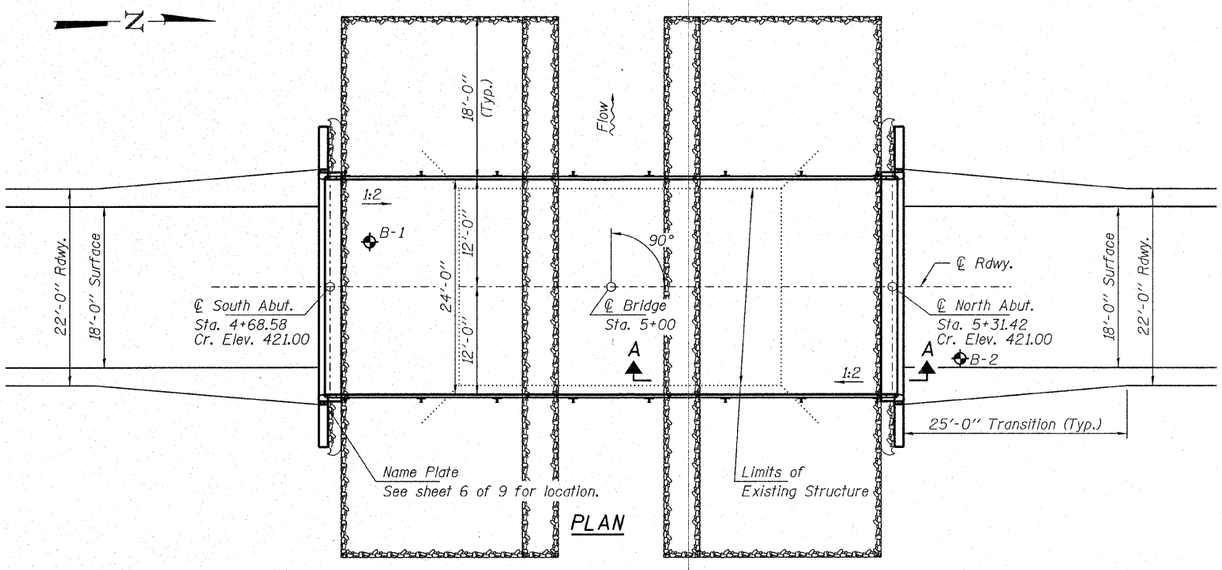

PLAN

GENERAL NOTES

Layout of riprap may be varied in the field to suit ground conditions as directed by the Engineer.

The Contractor shall drive test piles to 110% of the nominal required bearing specified in production locations at South Abutment or approved by the Engineer before ordering the remainder of piles.

Reinforcement bars shall conform to the requirements of ASTM A 706 Gr 60 (IL Modified). See Special Provisions.

Excavation required to construct the Abutments shall be included in the cost of Concrete Structures. No additional compensation will be allowed for Structure Excavation.

All proposed construction activities shall be in accordance with Nationwide Permit number 14 of the Department of the Army authorized under Section 404 of the Clean Water Act. The IEPA has issued Section 401 Water Quality Certification for this activity. See Special Provisions for conditions.

See Sheets 8 & 9 of 9 for Borings.

WEST VILLAGE CREEK
BUILT 200_ BY
EDWARDS COUNTY
SEC. 06-00061-00-BR / C.H. 4
F.A. PROJ. BROS-047(031)
STR. NO. 024-3136
LOADING HL-93

NAME PLATE

See Std. 515001

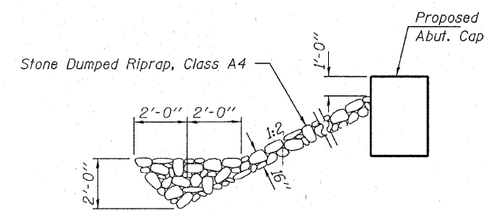

SECTION A-A

Note: See Special Provisions for Stone Dumped Riprap, Class A4.

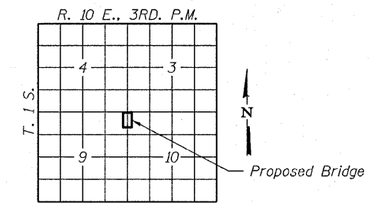

LOCATION SKETCH

TOTAL BILL OF MATERIAL

ITEM	UNIT	SUPER	SUB	TOTAL
Channel Excavation	Cu. Yd.			348
Stone Dumped Riprap, Class A4	Tons			300
Removal of Existing Structures	Each			1
Concrete Structures	Cu. Yd.		23.6	23.6
Concrete Encasement	Cu. Yd.		2.8	2.8
Precast Prestressed Concrete Deck Beams (27" Depth)	Sq. Ft.	1,536		1,536
Reinforcement Bars	Pound		2,520	2,520
Steel Railing, Type S1	Foot	123		123
Furnishing Steel Piles HP12x53	Foot		560	560
Driving Piles	Foot		560	560
Name Plates	Each		1	1

DESIGN STRESSES

FIELD UNITS

f'c = 3,500 psi
fy = 60,000 psi (Reinf.)

PRECAST PRESTRESSED UNITS

f'c = 6,000 psi
f'ci = 5,000 psi
fpu = 270,000 psi (½"ϕ low lax. strands)
fpbt = 201,960 psi (½"ϕ low lax. strands)
fy = 60,000 psi (Reinf.)

LOADING HL-93

Design Specifications: 2007 AASHTO LRFD with all applicable interims.
50#/Sq. Ft. included in dead load for future wearing surface.

SEISMIC DATA

Seismic Performance Zone (SPZ) = 3
Design Spectral Acceleration at 1.0 sec. (S_{D1}) = 0.393g
Design Spectral Acceleration at 0.2 sec. (S_{DS}) = 0.835g
Soil Site Class = E

WATERWAY DATA

Drainage Area ..... 8.1 Sq. Mi.
Existing Opening (15 yr) ..... 259 Sq. Ft.
Req'd Opening (15 yr) ..... 358 Sq. Ft.
Proposed Opening (15 yr) ..... 358 Sq. Ft.
Design Discharge (15 yr) ..... 2,157 C.F.S.
Created Head (15 yr) ..... 0.11 Ft.
100 Yr. Discharge ..... 3,700 C.F.S.
100 Yr. Created Head ..... 0.67 Ft.

I certify that to the best of my knowledge, information and belief, this bridge design is structurally adequate for the design loading shown on the plans. The design is an economical one for the style of structure and complies with requirements of the current "AASHTO Standard Specifications for Highway Bridges".

Steven W. Megginson 1/29/2008
ILLINOIS STRUCTURAL NO. 081-6064

LICENSED STRUCTURAL ENGINEER
STEVEN W. MEGGINSON
081-6064
SPRINGFIELD, IL.
STATE OF ILLINOIS

Expires 11-30-2010

GENERAL PLAN AND ELEVATION
STRUCTURE NO. 024-3136

DESIGNED -	S.M.S.
CHECKED -	S.W.M.
DRAWN -	D.T.M.
CHECKED -	D.T.M.

HAMPTON, LENZINI & RENWICK, INC.
CIVIL & STRUCTURAL ENGINEERS
LAND SURVEYORS
3085 STEVENSON DRIVE, SUITE 201
SPRINGFIELD, ILLINOIS 62703
(217) 546-3400
PROJECT NUMBER: 08.0184.130 | DATE: 11/05/08

SHEET NO. 1 OF 9 SHEETS

C.H.	SECTION	COUNTY	TOTAL SHEETS	SHEET NO.
4	06-00061-00-BR	EDWARDS	13	5

CONTRACT NO. 95571

FED. ROAD DIST. NO. | ILLINOIS | FED. AID PROJECT

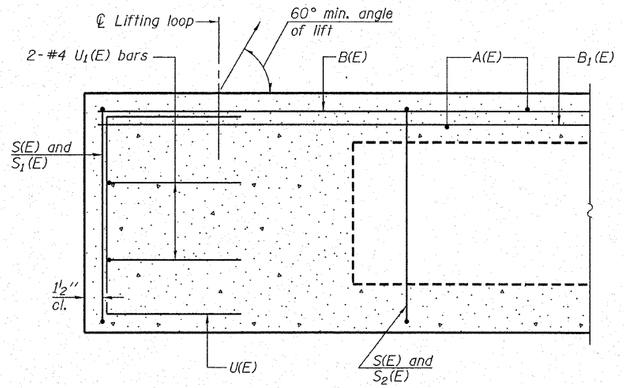

SECTION C-C

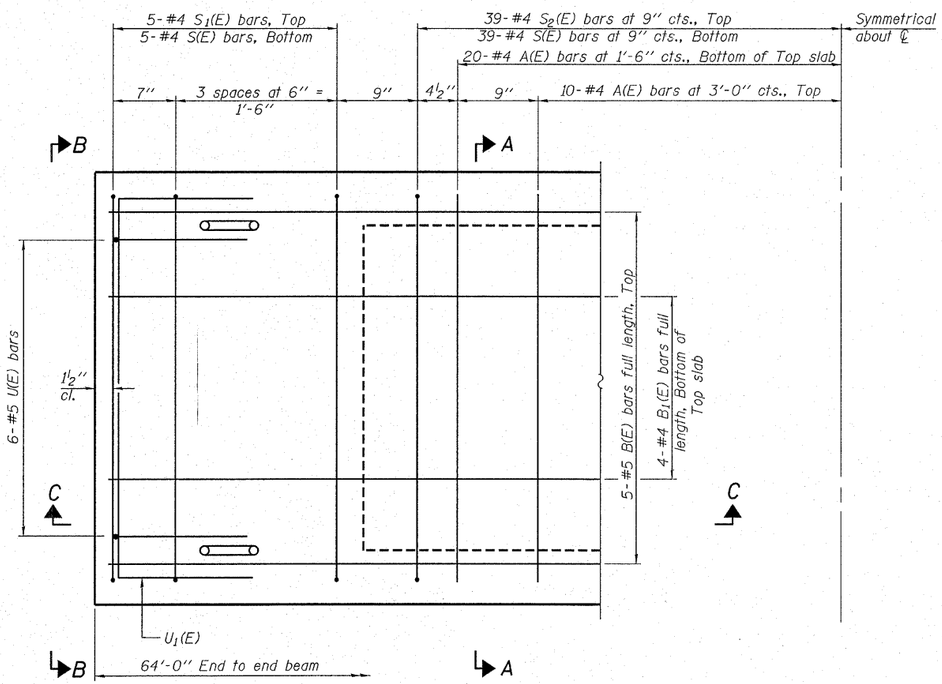

PLAN VIEW

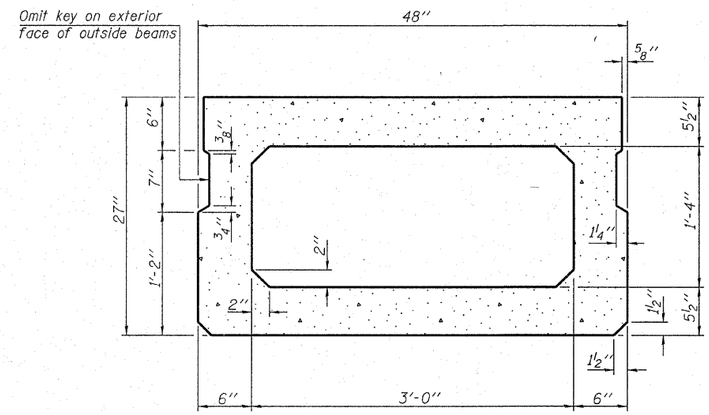

SECTION A-A

(Showing dimensions)

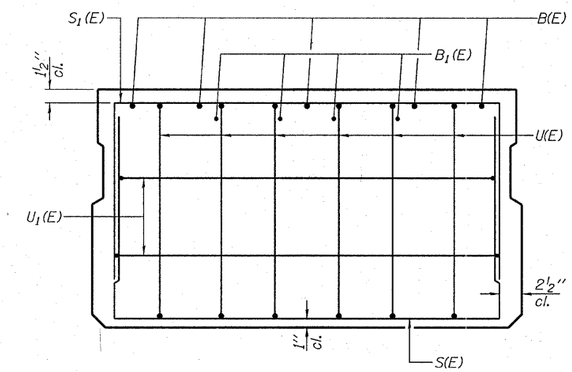

VIEW B-B

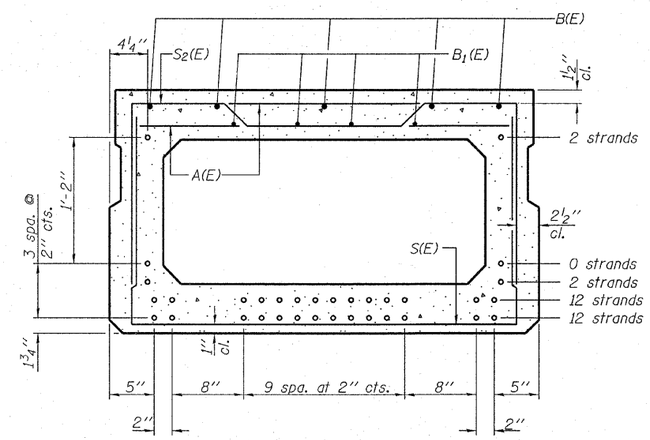

SECTION A-A

(Showing reinforcement and permissible strand locations)

Note: Place the number of strands specified in each row symmetrically about the centerline of beam in the permissible strand locations shown.

BAR LIST
ONE BEAM ONLY

(For information only)

Bar	No.	Size	Length	Shape
A(E)	60	#4	3'-7"	—
B(E)	5	#5	63'-8"	—
B_1(E)	4	#4	63'-8"	—
S(E)	88	#4	7'-5"	⊔
S_1(E)	10	#4	6'-11"	⊓
S_2(E)	78	#4	7'-2"	⊓
U(E)	12	#5	4'-6"	⊔
U_1(E)	4	#4	6'-0"	⊓

Note: See sheet 3 & 4 of 9 for additional details and Bill of Material.

Note: Spacing of S(E) and S_2(E) bars may be adjusted up to 4" in the immediate area of the transverse tie diaphragms to miss the block outs for the transverse ties.

DESIGNED -	S.M.S.
CHECKED -	S.W.M.
DRAWN -	D.T.M.
CHECKED -	D.T.M.

PD-2748-0 5-16-08

SUPERSTRUCTURE
27" X 48" PPC DECK BEAM
STRUCTURE NO. 024-3136

HAMPTON, LENZINI & RENWICK, INC.
CIVIL & STRUCTURAL ENGINEERS
LAND SURVEYORS
HLR
3085 STEVENSON DRIVE, SUITE 201
SPRINGFIELD, ILLINOIS 62703
(217) 546-3400

PROJECT NUMBER: 08.0164.130 DATE: 11/05/08

SHEET NO. 2 — 9 SHEETS

C.H.	SECTION	COUNTY	TOTAL SHEETS	SHEET NO.
4	06-00061-00-BR	EDWARDS	13	6

CONTRACT NO. **95571**

FED. ROAD DIST. NO. 1 | ILLINOIS | FED. AID PROJECT

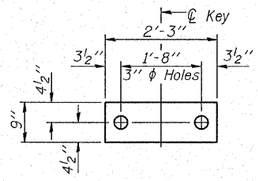

FABRIC BEARING PAD
(Interior - 10 Req'd)

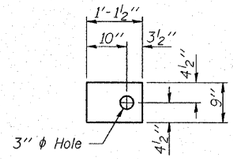

FABRIC BEARING PAD
(Exterior - 4 Req'd)

FIXED

Note: Omit holes when using expansion bearings.

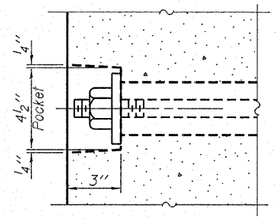

SECTION A-A

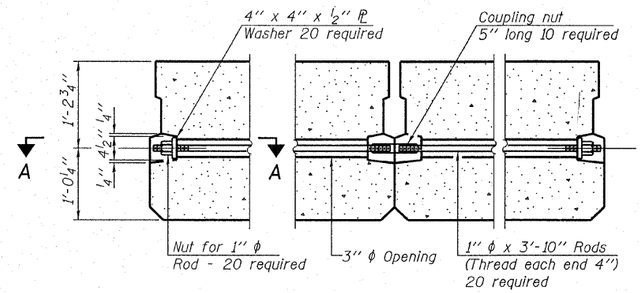

TYPICAL TRANSVERSE TIE ASSEMBLY

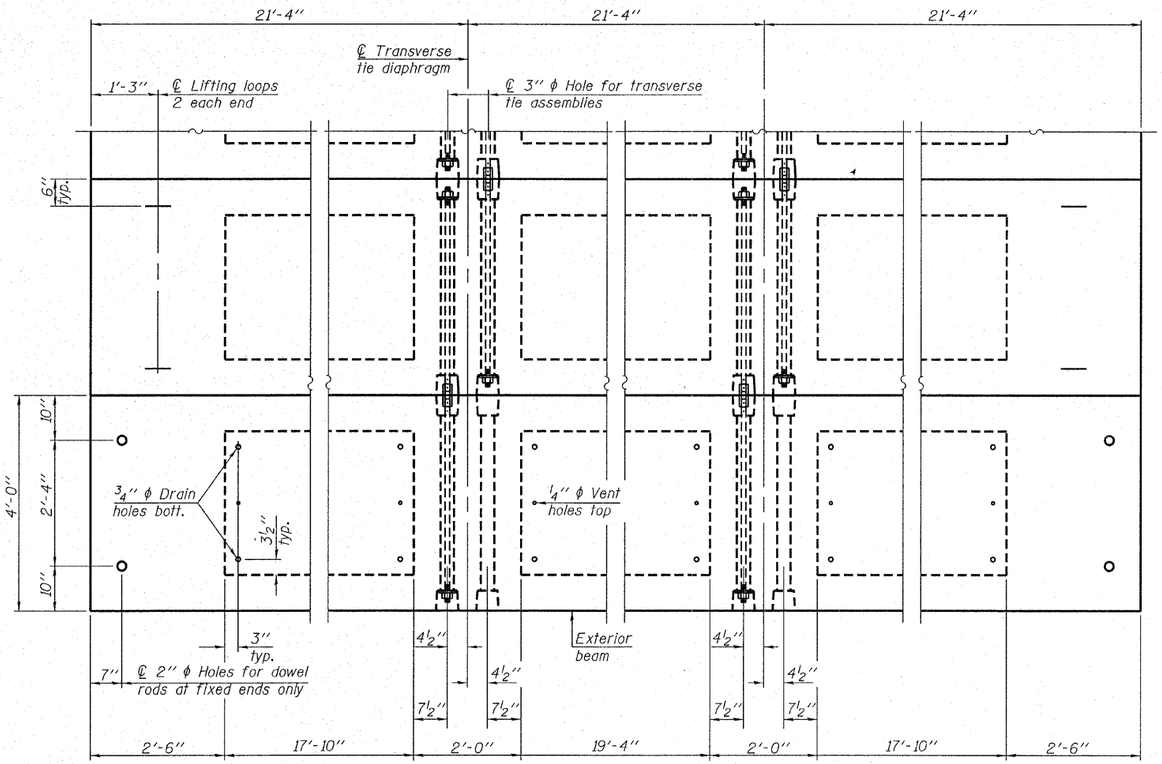

PLAN VIEW

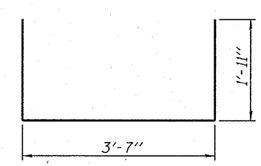

BAR S(E)

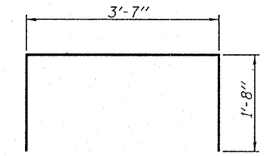

BAR S_1(E)

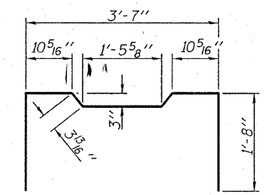

BAR S_2(E)

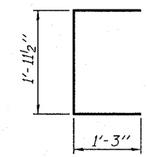

BAR U(E)

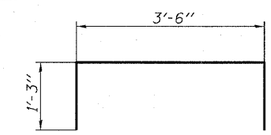

BAR U_1(E)

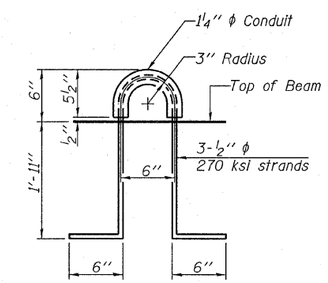

LIFTING LOOP DETAIL

Note: Connect beams in pairs with the transverse tie configuration shown.

NOTES

Prestressing steel shall be uncoated high strength, low relaxation 7-wire strand, Grade 270. The nominal diameter shall be ½" and the nominal cross-sectional area shall be 0.153 sq. in.

The 1" ϕ rods in the transverse tie assembly shall be tightened to a snug fit and the threads set. Pockets on exterior faces of bridge shall be filled with grout after transverse tie assembly is in place.

Reinforcement bars shall conform to ASTM A 706, Grade 60. (See Special Provisions).

Two ⅛" fabric adjusting shims of the dimensions of the exterior bearing pad shall be provided for each bearing pad location.

A minimum 2½" ϕ lifting pin shall be used to engage the lifting loops during handling.

Corrosion Inhibitor, per Article 1020.05(b)(12) and 1021.06 of the Standard Specifications, shall be used in the concrete for precast prestressed concrete deck beams.

Compressive strength of prestressed concrete, f'c, shall be 6000 psi.

Compressive strength of prestressed concrete at release, f'ci, shall be 5000 psi.

BILL OF MATERIAL

Precast Prestressed Conc. Deck Bms. (27" depth)	Sq. Ft.	1,536

DESIGNED -	S.M.S.
CHECKED -	S.W.M.
DRAWN -	D.T.M.
CHECKED -	D.T.M.

PD-2748-0D 5-16-08

HAMPTON, LENZINI & RENWICK, INC.
CIVIL & STRUCTURAL ENGINEERS
LAND SURVEYORS
3085 STEVENSON DRIVE, SUITE 201
SPRINGFIELD, ILLINOIS 62703
(217) 546-3400

PROJECT NUMBER: 08.0184.130 DATE: 11/05/08

SHEET NO. 3
9 SHEETS

C.H.	SECTION	COUNTY	TOTAL SHEETS	SHEET NO.
4	06-00061-00-BR	EDWARDS	13	7
		CONTRACT NO. 95571		
FED. ROAD DIST. NO.	ILLINOIS	FED. AID PROJECT		

SUPERSTRUCTURE DETAILS
27" X 48" PPC DECK BEAMS
STRUCTURE NO. 024-3136

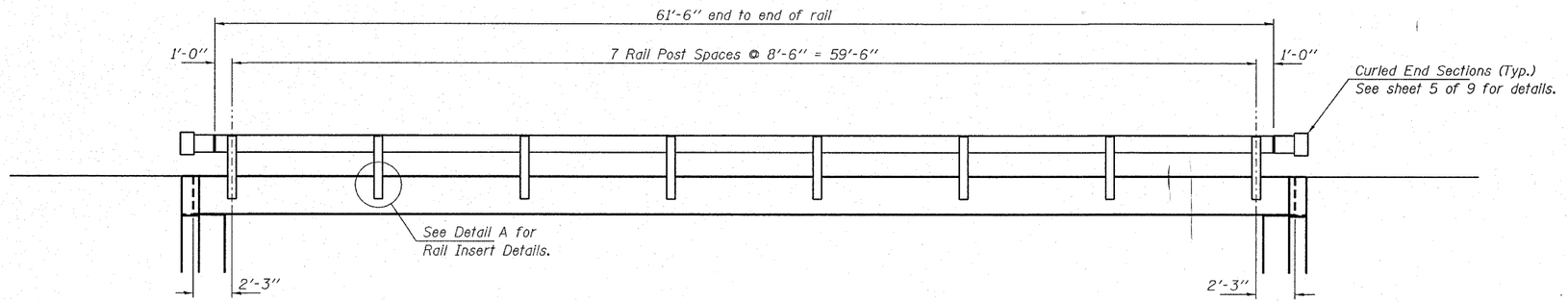

ELEVATION

Showing Rail Post Spaces

See sheet 5 of 9 for Railing Details.

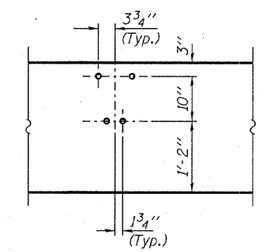

DETAIL A

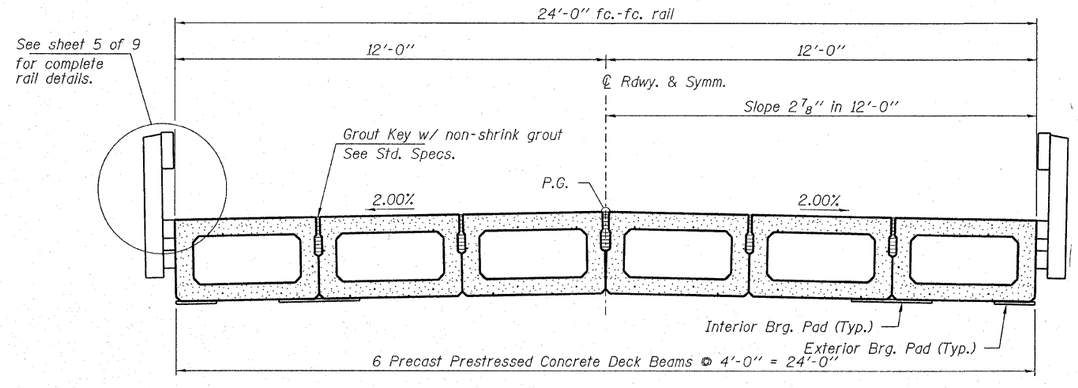

CROSS SECTION

See sheets 2 & 3 of 9 for Superstructure.

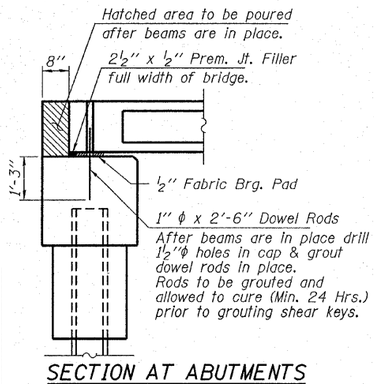

SECTION AT ABUTMENTS

@ Rt. L's

DESIGNED -	S.M.S.
CHECKED -	S.W.M.
DRAWN -	D.T.M.
CHECKED -	D.T.M.

SUPERSTRUCTURE DETAILS
STRUCTURE NO. 024-3136

HAMPTON, LENZINI & RENWICK, INC.
CIVIL & STRUCTURAL ENGINEERS
LAND SURVEYORS
HLR
3085 STEVENSON DRIVE, SUITE 201
SPRINGFIELD, ILLINOIS 62703
(217) 546-3400

PROJECT NUMBER: 08.0184.130 | DATE: 11/05/08

SHEET NO. 4

9 SHEETS

C.H.	SECTION	COUNTY	TOTAL SHEETS	SHEET NO.
4	06-00061-00-BR	EDWARDS	13	8
		CONTRACT NO. 95571		
FED. ROAD DIST. NO.	ILLINOIS	FED. AID PROJECT		

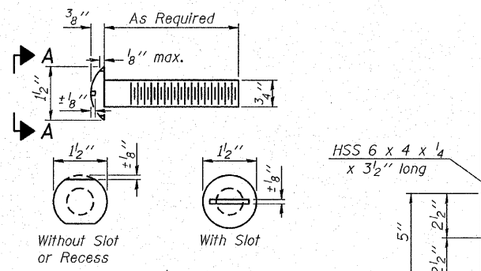

VIEW A-A ROUND HEAD BOLT

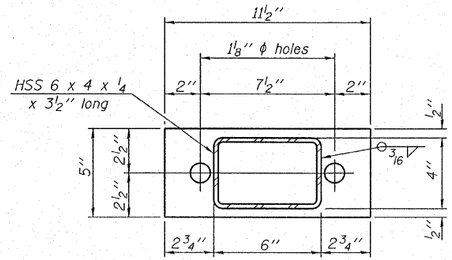

PL 1/2" x 11 1/2" x 5"

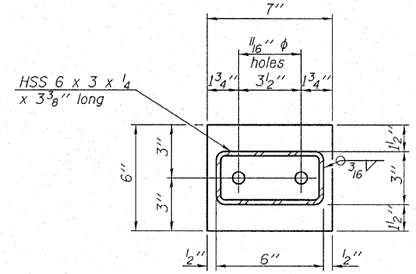

PL 1/2" x 7" x 6"

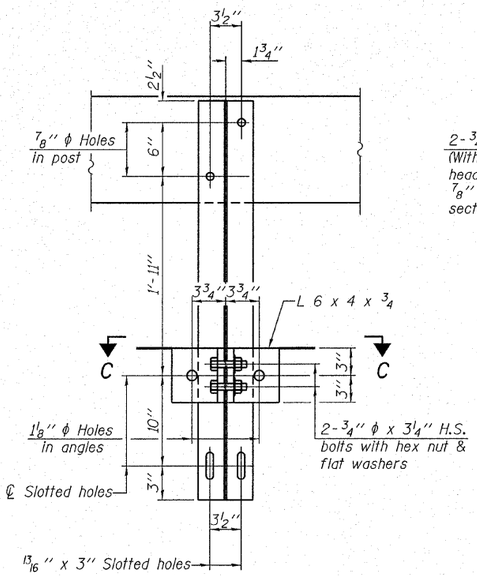

SECTION B-B

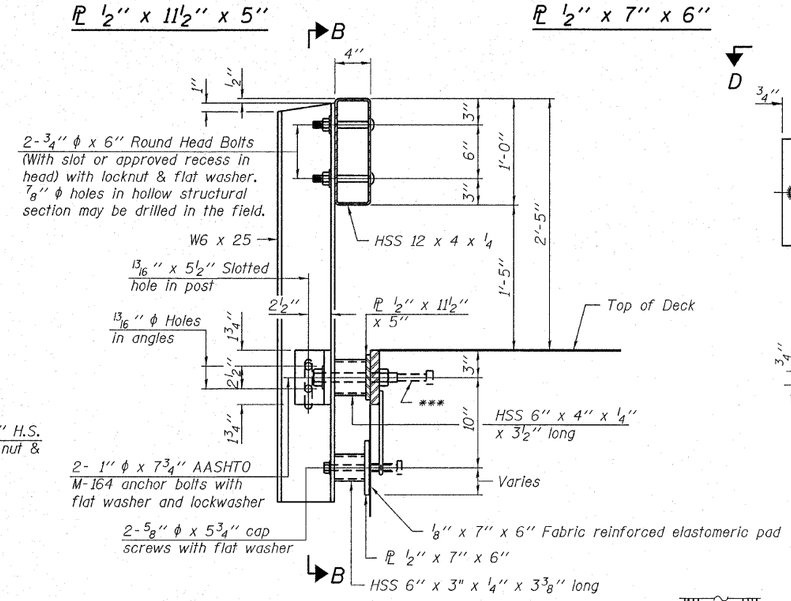

SECTION AT RAILING POST

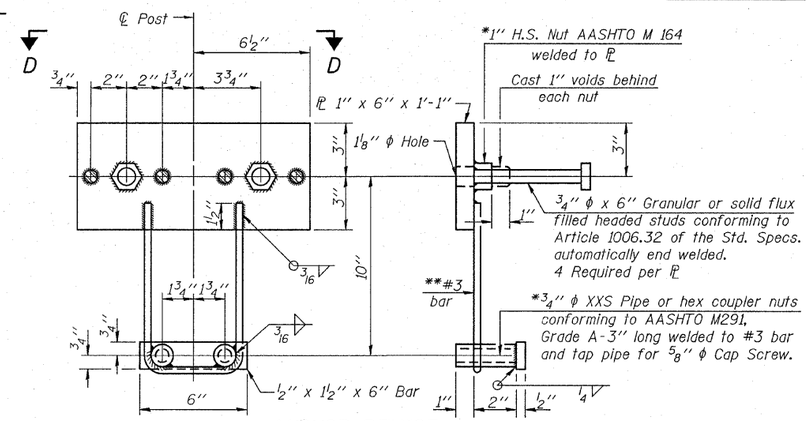

ANCHOR DEVICE

*Threaded areas shall be plugged or blocked off during casting of beam.

Notes:

All field drilled holes shall be coated with an approved zinc rich paint before erection.

For multi-span bridges, sufficient 1/4" x 6" x 1'-2" galvanized steel shims shall be provided to align rail between adjacent spans. Cost included with Steel Railing, Type S-1.

All steel rail elements shall be galvanized according to Article 509.05 of the Standard Specifications.

***The studs of the anchor devices shall be placed below the top reinforcement bars and the outermost longitudinal reinforcement bar shall be placed directly above the studs of the rail post anchor device.

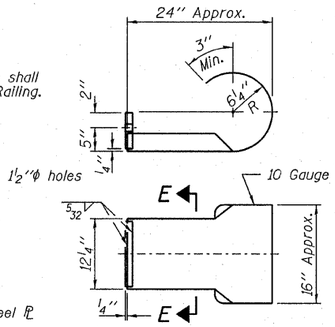

SECTION E-E

CURLED END SECTION DETAILS

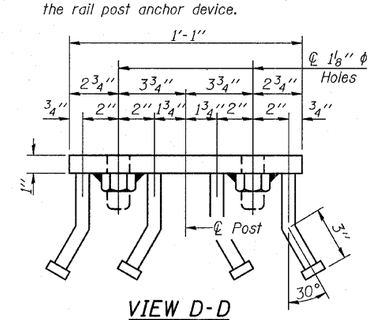

VIEW D-D

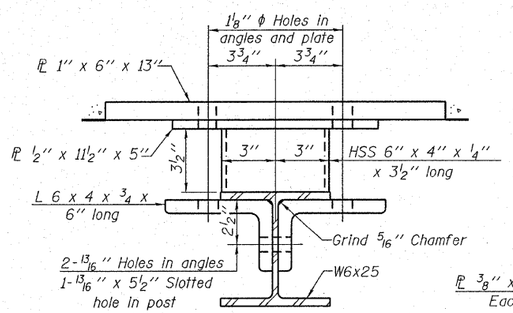

SECTION C-C

**Whenever the lower insert assemblies interfere with strand locations, the #3 bars shall be cut and adjusted in order to allow raising or lowering of the lower inserts. Maximum adjustment not to exceed 1/2".

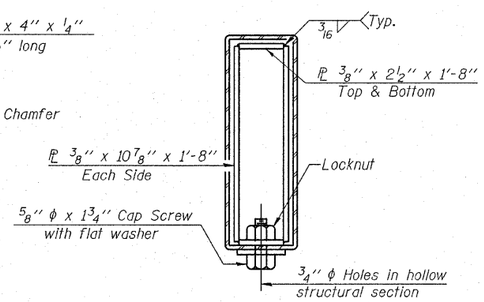

SECTIONS AT RAIL SPLICE

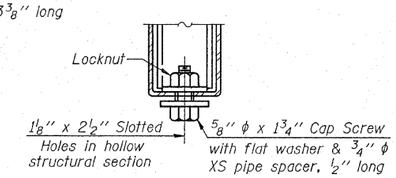

RAIL SPLICE CONNECTION AT EXPANSION JT.

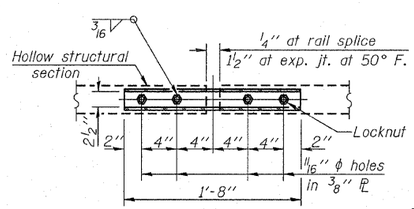

PLAN-BOTTOM SPLICE PL TYPICAL

1 1/8" ϕ Holes for 1" ϕ x 4" Round head bolts. Provide 2 flat washers & locknuts for guard rail connection shown on Std. 631026.

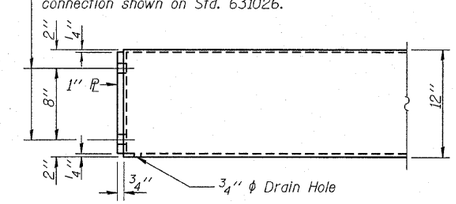

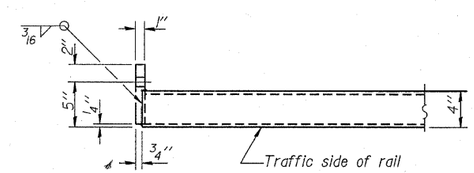

END OF RAIL DETAILS

BILL OF MATERIAL

Item	Unit	Quantity
Steel Railing, Type S-1	Foot	123

STEEL RAILING, TYPE S-1
STRUCTURE NO. 024-3136

DESIGNED	S.M.S.
CHECKED	S.W.M.
DRAWN	D.T.M.
CHECKED	D.T.M.

R-23A 5-16-08 (10'-9" Maximum Post Spacing)

HAMPTON, LENZINI & RENWICK, INC.
CIVIL & STRUCTURAL ENGINEERS
LAND SURVEYORS
3085 STEVENSON DRIVE, SUITE 201
SPRINGFIELD, ILLINOIS 62703
(217) 546-3400

PROJECT NUMBER: 08.0184.130 DATE: 11/05/08

SHEET NO. 5
9 SHEETS

C.H.	SECTION	COUNTY	TOTAL SHEETS	SHEET NO.
4	06-00061-00-BR	EDWARDS	13	9
		CONTRACT NO. 95571		

FED. ROAD DIST. NO. | ILLINOIS | FED. AID PROJECT

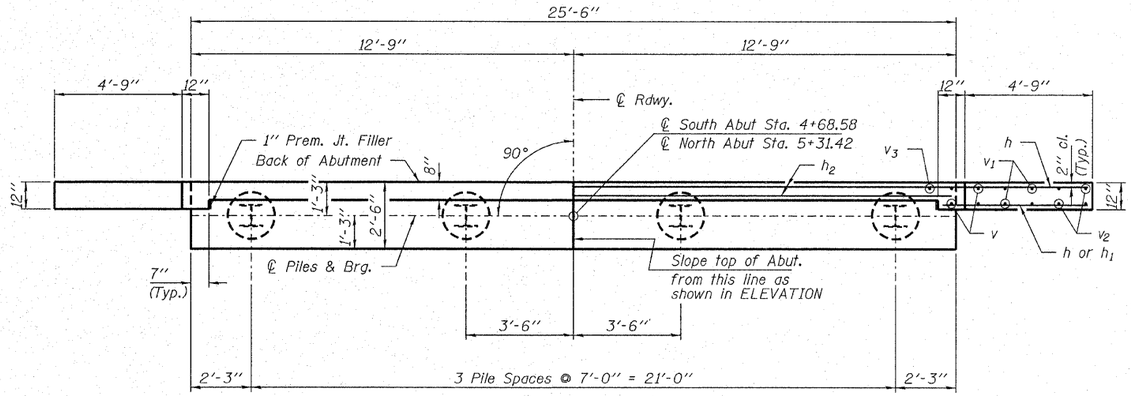

PLAN

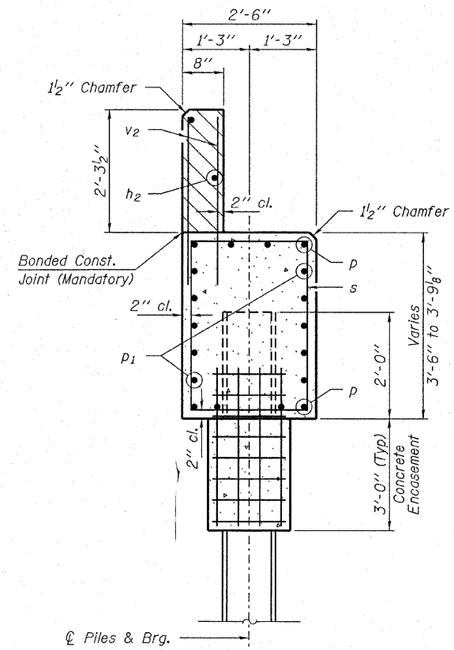

SECTION A-A

Hatched area to be poured after beams are in place.

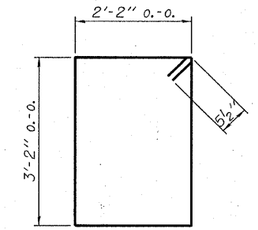

BAR s

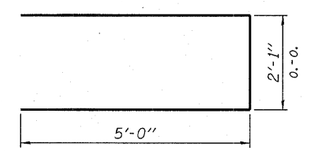

BAR u

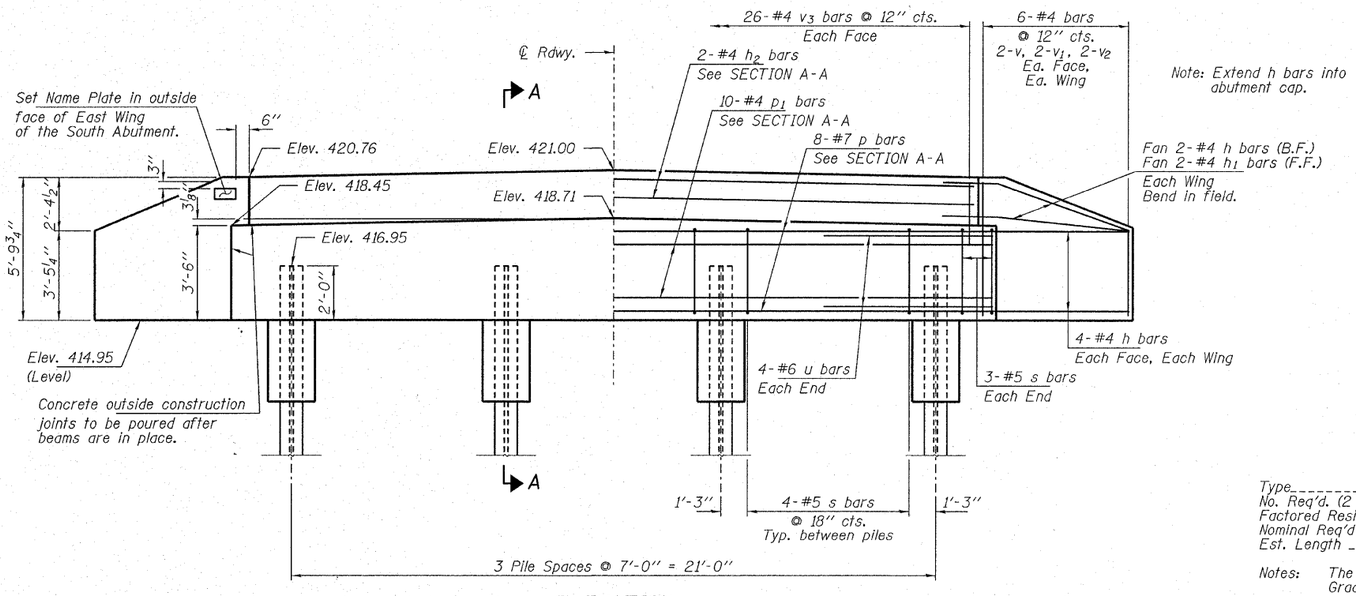

ELEVATION

BILL OF MATERIAL - 2 ABUTS.

BAR	NO.	SIZE	LENGTH	SHAPE
h	40	#4	7'-0"	
h_1	8	#4	5'-6"	
h_2	4	#4	25'-2"	
p	16	#7	25'-2"	
p_1	20	#4	25'-2"	
s	36	#5	11'-7"	
u	16	#6	12'-1"	
v	16	#4	5'-1"	
v_1	16	#4	4'-1"	
v_2	16	#4	3'-1"	
v_3	104	#4	3'-2"	
Concrete Structures			Cu. Yd.	23.6
Concrete Encasement			Cu. Yd.	2.8
Reinforcement Bars			Pound	2,520
Steel Piles HP12x53			Foot	560
Name Plates			Each	1

PILE DATA

Type _____ Steel HP12x53
No. Req'd. (2 Abuts.) _____ 8
Factored Resistance Available ___ 209 Kips/Pile
Nominal Req'd Bearing _____ 418 Kips/Pile
Est. Length _____ 70 Ft/Pile

Notes: The Steel H-Piles shall be according to AASHTO M270 Grade 50.

DESIGNED - S.M.S.	
CHECKED - S.W.M.	
DRAWN - D.T.M.	
CHECKED - D.T.M.	

ABUTMENTS
STRUCTURE NO. 024-3136

HAMPTON, LENZINI & RENWICK, INC.
CIVIL & STRUCTURAL ENGINEERS
LAND SURVEYORS
3085 STEVENSON DRIVE, SUITE 201
SPRINGFIELD, ILLINOIS 62703
(217) 546-3400

PROJECT NUMBER: 08.0184.130 DATE: 11/05/08

SHEET NO. 6
9 SHEETS

C.H.	SECTION	COUNTY	TOTAL SHEETS	SHEET NO.
4	06-00061-00-BR	EDWARDS	13	10
		CONTRACT NO. 95571		
FED. ROAD DIST. NO.	ILLINOIS	FED. AID PROJECT		

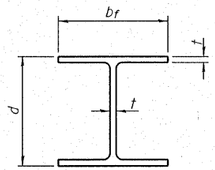

STEEL PILE TABLE

Designation	Depth d	Flange width b_f	Web and Flange thickness t	Encasement diameter A
HP 14x117	14 1/4"	14 7/8"	13/16"	30"
x102	14"	14 3/4"	11/16"	30"
x89	13 7/8"	14 3/4"	5/8"	30"
x73	13 5/8"	14 5/8"	1/2"	30"
HP 12x84	12 1/4"	12 1/4"	11/16"	24"
x74	12 1/8"	12 1/4"	5/8"	24"
x63	12"	12 1/8"	1/2"	24"
x53	11 3/4"	12"	7/16"	24"
HP 10x57	10"	10 1/4"	9/16"	24"
x42	9 3/4"	10 1/8"	7/16"	24"
HP 8x36	8"	8 1/8"	7/16"	18"

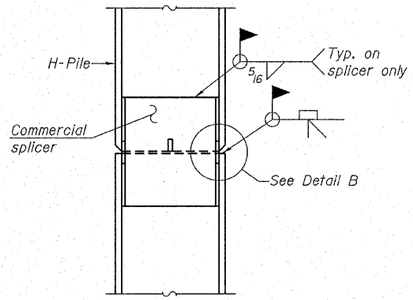

ELEVATION

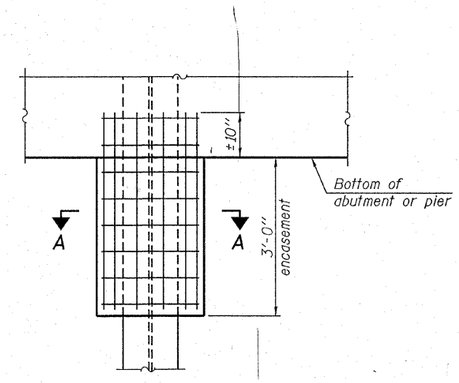

ELEVATION

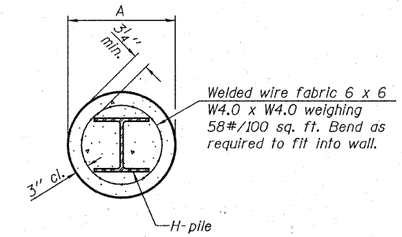

Note: Forms for encasement may be omitted when soil conditions permit.

SECTION A-A

PILE ENCASEMENT

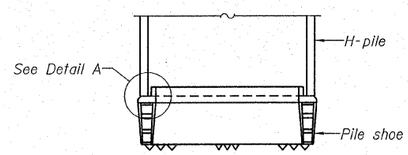

ELEVATION

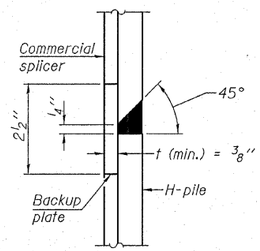

DETAIL "B"

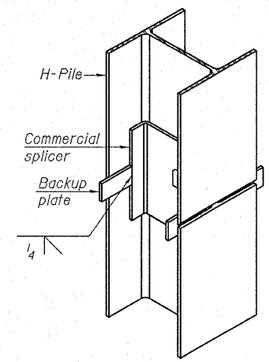

ISOMETRIC VIEW

WELDED COMMERCIAL SPLICE

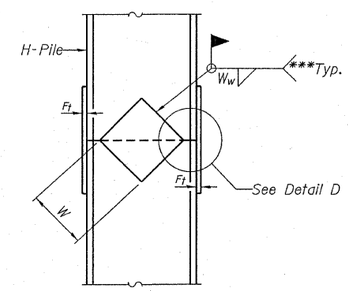

ELEVATION

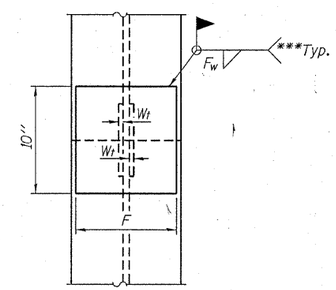

END VIEW

Designation	F	F_t	F_w	W	W_t	W_w
HP 14x117	12 1/2"	1"	7/8"	7 3/4"	5/8"	1/2"
x102	12 1/2"	7/8"	3/4"	7 3/4"	5/8"	1/2"
x89	12 1/2"	3/4"	11/16"	7 3/4"	5/8"	1/2"
x73	12 1/2"	5/8"	9/16"	7 3/4"	5/8"	1/2"
HP 12x84	10"	7/8"	11/16"	6 1/2"	5/8"	1/2"
x74	10"	7/8"	11/16"	6 1/2"	5/8"	1/2"
x63	10"	5/8"	1/2"	6 1/2"	1/2"	3/8"
x53	10"	5/8"	1/2"	6 1/2"	1/2"	3/8"
HP 10x57	8"	3/4"	9/16"	5 1/4"	1/2"	3/8"
x42	8"	5/8"	9/16"	5 1/4"	1/2"	3/8"
HP 8x36	7"	5/8"	7/16"	4 1/4"	1/2"	3/8"

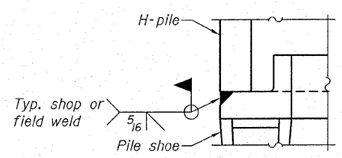

DETAIL A

H-PILE SHOE ATTACHMENT

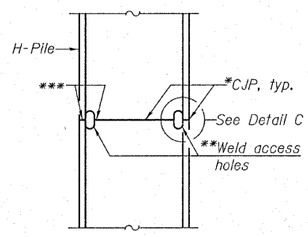

ELEVATION

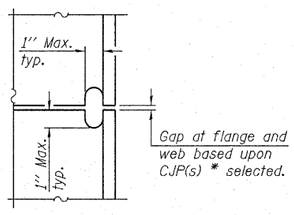

DETAIL C

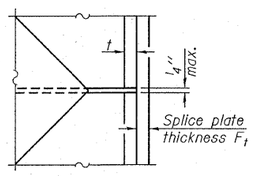

DETAIL D

COMPLETE PENETRATION WELD SPLICE

*Use joint conforming to Figure 3.4 in AWS D1.1, Structure Welding Code-Steel.

**Preparation per Fig. 5.2 in AWS D1.1, Structure Welding Code-Steel.

***Interrupt welds 1/4" from end of each pile.

Note: The steel H-piles shall be according to AASHTO M270 Grade 50.

DESIGNED	S.M.S.
CHECKED	S.W.M.
DRAWN	D.T.M.
CHECKED	D.T.M.

F-HP 5-16-08

HAMPTON, LENZINI & RENWICK, INC.
CIVIL & STRUCTURAL ENGINEERS
LAND SURVEYORS
HLR
3085 STEVENSON DRIVE, SUITE 201
SPRINGFIELD, ILLINOIS 62703
(217) 546-3400
PROJECT NUMBER: 08.0184.130 DATE: 11/05/08

SHEET NO. 7 OF 9 SHEETS

C.H.	SECTION	COUNTY	TOTAL SHEETS	SHEET NO.
4	06-00061-00-BR	EDWARDS	13	11
		CONTRACT NO. 95571		
FED. ROAD DIST. NO.	ILLINOIS	FED. AID PROJECT		

STEEL H PILE DETAILS
STRUCTURE NO. 024-3136

HOLCOMB FOUNDATION ENGINEERING INC.
P.O. Box 88 618-529-5262
Carbondale, Il. 62903 618-457-8991 fax

Page 1 of 2

Bridge Foundation Boring Log

Project: H-08074 Bridge
Section: 06-00061-00-BR Station
Structure: 024-3082
County: Edwards

Date: 5-2-08
Bored by: J. Carter
Checked By: T. Holcomb

Boring No: 1
Station:
Offset:

Surface Water Elev.
Ground Water Elev. During Drilling 401.32
Upon Completion 381.22

Description	Elevation	N	Qu tsf	w %
Ground Surface 420.32	0			
2" Asphalt over 7" Crushed Stone 419.62				
Brown Mottled Gray Silty to Sandy CLAY (A-6)		14	1.6S	16
	-5	19	2.0S	20
411.82				
Gray Mottled Brown Silty to Sandy CLAY (A-6)		0	---	-
	-10	3	0.3B	22
		4	0.6S	20
406.82				
Brown Mottled Gray Silty to Sandy CLAY (A-6)	-15	5	1.0B	24
		4	0.6B	25
401.82				
Gray Silty CLAY to CLAY with fine sand (A-7-6)	-20	2	1.4B	28
		3	1.3B	24
clay (continued)	-25	3	1.1B	21
393.32				
Gray Fine to Medium SAND (A-2-4)		4	0.7B	20
	-30	16	---	-
386.82				
Gray Silty to Sandy CLAY (A-6)	-35	22	3.6B	15
	-40	19	6.7S	14

N = Standard Penetration Test Blows per foot to drive 2" O.D. Split Spoon Sampler 12" with a 140 lbs. hammer falling 30"
Qu-Unconfined Compressive Strength in tons/sq.ft.
w-Water Content-percentage of oven dry weight-%
B = Bulge Failure
S = Shear Failure
E = Estimated Value
P = Penetrometer

HOLCOMB FOUNDATION ENGINEERING INC.
P.O. Box 88 618-529-5262
Carbondale, Il. 62903 618-457-8991 fax

Page 2 of 2

Bridge Foundation Boring Log

Project: H-08074 Bridge
Section: 06-00061-00-BR Station
Structure: 024-3082
County: Edwards

Date: 5-2-08
Bored by: J. Carter
Checked By: T. Holcomb

Boring No: 1
Station:
Offset:

Surface Water Elev.
Ground Water Elev. During Drilling 401.32
Upon Completion 381.22

Description	Elevation	N	Qu tsf	w %
silty to sandy clay (continued)	-45	14	2.7B	16
	-50	23	4.3B	15
	-55	14	2.5B	17
	-60	16	2.2B	17
356.82				
Gray Fine to Medium SAND (A-2-4)	-65	19	---	27
351.82				
Gray SHALE	-70	100/2"	-	9
		100/4"	-	11
346.32		100/3"	-	9
End of Boring @ -74.0'	-75			
	-80			
	-85			

N = Standard Penetration Test Blows per foot to drive 2" O.D. Split Spoon Sampler 12" with a 140 lbs. hammer falling 30"
Qu-Unconfined Compressive Strength in tons/sq.ft.
w-Water Content-percentage of oven dry weight-%
B = Bulge Failure
S = Shear Failure
E = Estimated Value
P = Penetrometer

BORING 1

STRUCTURE NO. 024-3136

DESIGNED -	S.M.S.
CHECKED -	S.W.M.
DRAWN -	D.T.M.
CHECKED -	D.T.M.

HAMPTON, LENZINI & RENWICK, INC.
CIVIL & STRUCTURAL ENGINEERS
LAND SURVEYORS
HLR
3085 STEVENSON DRIVE, SUITE 201
SPRINGFIELD, ILLINOIS 62703
(217) 546-3400
PROJECT NUMBER: 08.0184.130 DATE: 11/05/08

SHEET NO. 8
9 SHEETS

C.H.	SECTION	COUNTY	TOTAL SHEETS	SHEET NO.
4	06-00061-00-BR	EDWARDS	13	12
		CONTRACT NO. 95571		
FED. ROAD DIST. NO.	ILLINOIS	FED. AID PROJECT		

HOLCOMB FOUNDATION ENGINEERING INC.
P.O. Box 88 618-529-5262
Carbondale, Il. 62903 618-457-8991 fax

Page 1 of 2

Bridge Foundation Boring Log

Project: H-08074 Bridge
Section: 06-00061-00-BR Station
Structure: 024-3082
County: Edwards

Date: 5-2-08
Bored by: J. Carter
Checked By: T. Holcomb

Boring No: 2
Station:
Offset:

Surface Water Elev.
Ground Water Elev. During Drilling 401.52
Upon Completion plugged

Description	Elevation	N	Qu tsf	w %
Ground Surface 420.02	0			
2" Asphalt over 7" Crushed Stone 419.42				
Brown Mottled Gray Silty to Sandy CLAY (A-6)		12	2.0S	15
	-5	11	--	12
414.02				
Gray Silty CLAY to Sandy CLAY (A-6)		1	0.4B	23
	-10	2	0.5B	22
		4	0.5B	23
406.02				
Brown Mottled Gray Silty to Sandy CLAY (A-6)	-15	3	1.0B	25
		3	0.7S	21
	-20	3	--	23
399.02				
Gray Silty CLAY to CLAY (A-7-6)		3	1.1B	28

Description	Elevation	N	Qu tsf	w %
clay (continued)	-25	3	0.8B	25
		3	0.9B	22
391.52				
Gray Clayey SAND (A-2-4) (A-2-4)	-30	13	0.7B	18
386.52				
Gray Sandy CLAY (A-6)	-35	22	3.8S	13
	-40	18	6.6S	14

N = Standard Penetration Test Blows per foot to drive 2" O.D. Split Spoon Sampler 12" with a 140 lbs. hammer falling 30"
Qu-Unconfined Compressive Strength in tons/sq.ft.
w-Water Content-percentage of oven dry weight-%
B = Bulge Failure
S = Shear Failure
E = Estimated Value
P = Penetrometer

HOLCOMB FOUNDATION ENGINEERING INC.
P.O. Box 88 618-529-5262
Carbondale, Il. 62903 618-457-8991 fax

Page 2 of 2

Bridge Foundation Boring Log

Project: H-08074 Bridge
Section: 06-00061-00-BR Station
Structure: 024-3082
County: Edwards

Date: 5-2-08
Bored by: J. Carter
Checked By: T. Holcomb

Boring No: 2
Station:
Offset:

Surface Water Elev.
Ground Water Elev. During Drilling 401.52
Upon Completion plugged

Description	Elevation	N	Qu tsf	w %
sandy clay (continued)	-45	14	2.6B	16
	-50	25	5.6S	14
	-55	16	2.8B	15
	-60	12	3.7B	15
356.52				
Gray Fine to Medium SAND (A-2-4)	-65	17	--	20

Description	Elevation	N	Qu tsf	w %
351.52				
Gray SHALE	-70	100 /2"	--	14
		100 /4"	2.3S	26
346.02		100 /3"	--	12
End of Boring @ -74.0'	-75			
	-80			
	-85			

N = Standard Penetration Test Blows per foot to drive 2" O.D. Split Spoon Sampler 12" with a 140 lbs. hammer falling 30"
Qu-Unconfined Compressive Strength in tons/sq.ft.
w-Water Content-percentage of oven dry weight-%
B = Bulge Failure
S = Shear Failure
E = Estimated Value
P = Penetrometer

BORING 2

STRUCTURE NO. 024-3136

DESIGNED -	S.M.S.
CHECKED -	S.W.M.
DRAWN -	D.T.M.
CHECKED -	D.T.M.

HAMPTON, LENZINI & RENWICK, INC.
CIVIL & STRUCTURAL ENGINEERS
LAND SURVEYORS
HLR
3085 STEVENSON DRIVE, SUITE 201
SPRINGFIELD, ILLINOIS 62703
(217) 546-3400
PROJECT NUMBER: 08.0184.130 DATE: 11/05/08

SHEET NO. 9
9 SHEETS

C.H.	SECTION	COUNTY	TOTAL SHEETS	SHEET NO.
4	06-00061-00-BR	EDWARDS	13	13
		CONTRACT NO. 95571		
FED. ROAD DIST. NO.	ILLINOIS	FED. AID PROJECT		