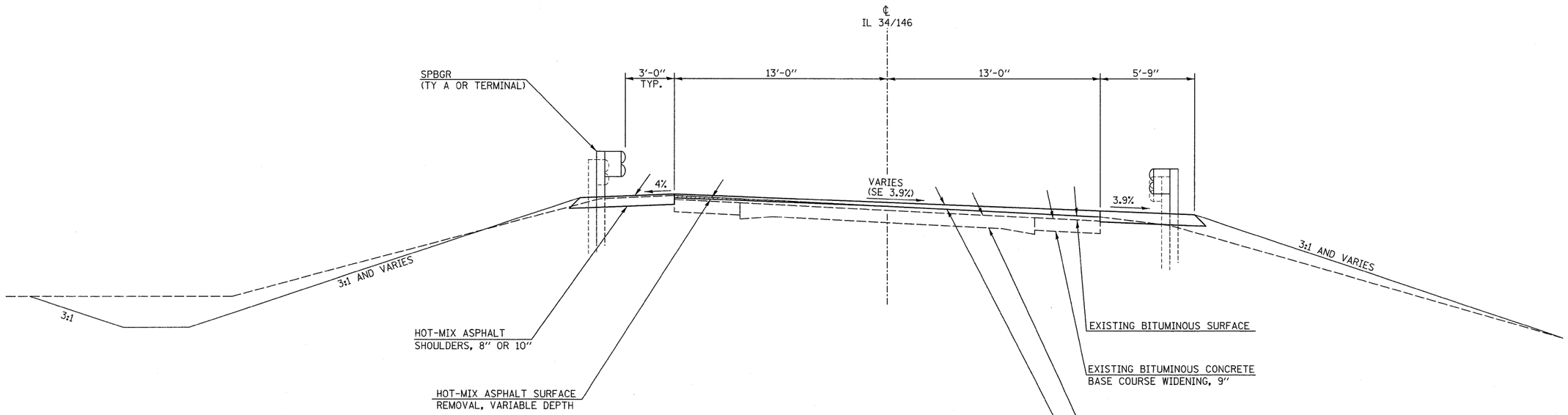

TYPICAL SECTION

WITHIN GUARDRAIL LIMITS
FULL SUPERELEVATION
STA. 73+95.2 TO STA. 79+93.2
TRANSITION
STA. 72+45.2 TO STA. 73+95.2
STA. 79+93.2 TO STA. 81+43.2

• HOT-MIX ASPHALT SURFACE REMOVAL, VARIABLE DEPTH
USED TO CORRECT SUPERELEVATION TO 3.9%

NOTE:
SEE DETAILS FOR
SUPERELEVATION TRANSITION

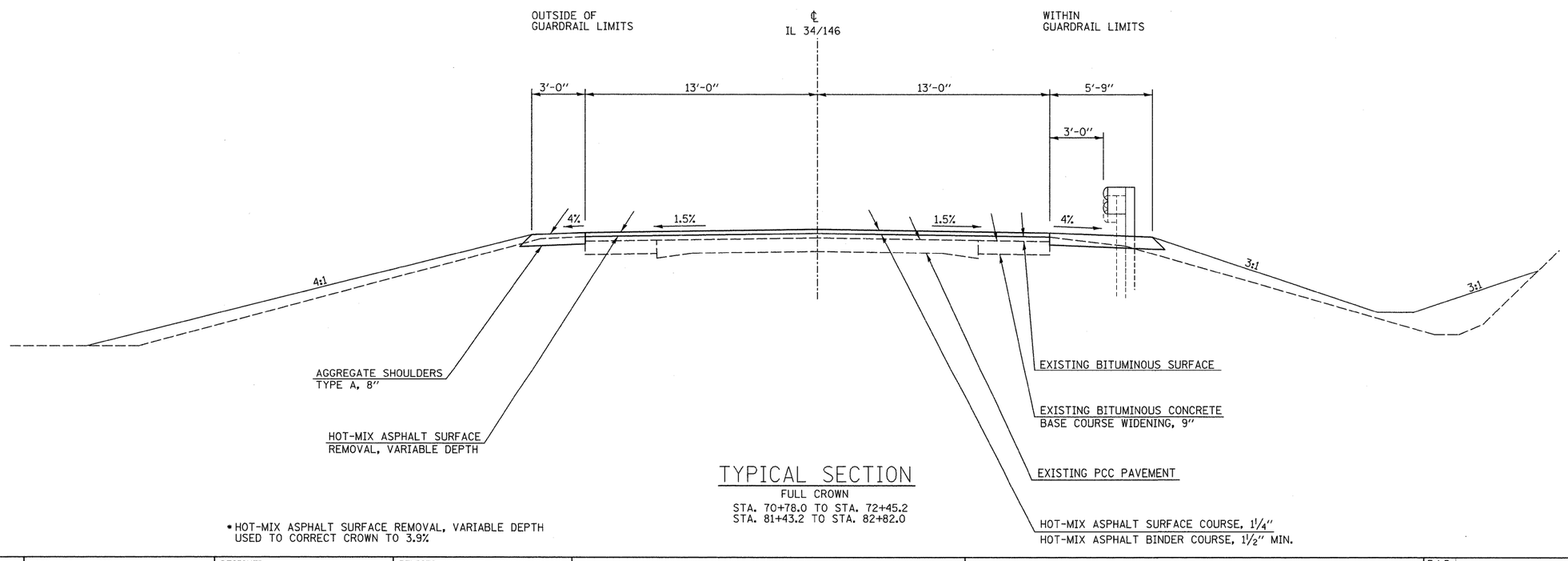

TYPICAL SECTION

FULL CROWN
STA. 70+78.0 TO STA. 72+45.2
STA. 81+43.2 TO STA. 82+82.0

• HOT-MIX ASPHALT SURFACE REMOVAL, VARIABLE DEPTH
USED TO CORRECT CROWN TO 3.9%

FILE NAME = $FILEL$	USER NAME = $USER$	DESIGNED -	REVISED -	STATE OF ILLINOIS DEPARTMENT OF TRANSPORTATION	TYPICAL SECTIONS IL 34 /146 OVER THREE MILE CREEK	F.A.P. RTE.	SECTION	COUNTY	TOTAL SHEETS / SHEET NO.
		DRAWN -	REVISED -			885	5B-1	HARDIN	48 / 5
	PLOT SCALE = $SCALE$	CHECKED -	REVISED -					CONTRACT NO. 98949	
	PLOT DATE = $DATE$	DATE -	REVISED -		SCALE: SHEET NO. OF SHEETS STA. TO STA.	FED. ROAD DIST. NO.	ILLINOIS	FED. AID PROJECT	