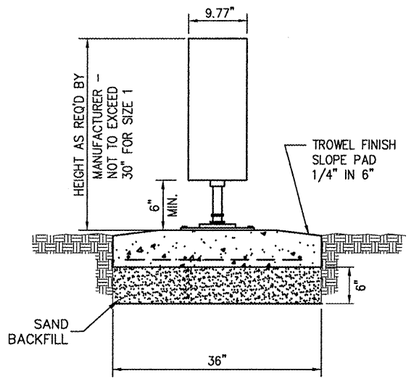

SIDE VIEW
(NOT TO SCALE)

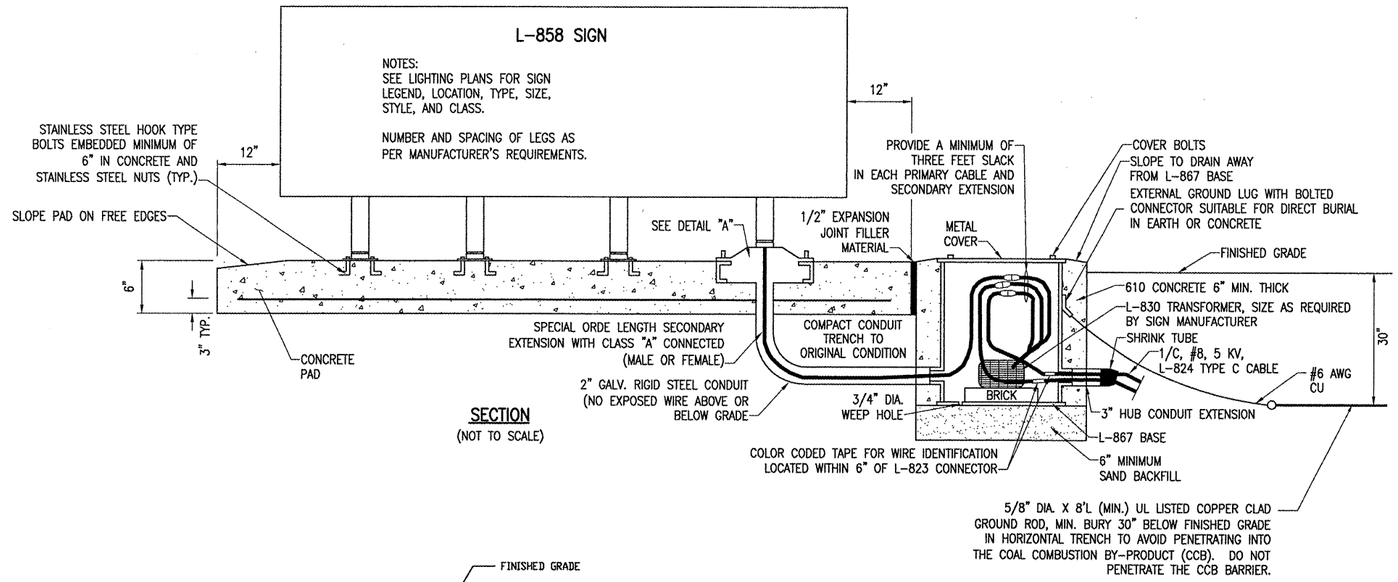

SECTION
(NOT TO SCALE)

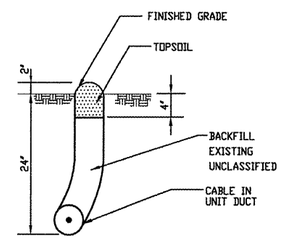

CABLE PLOWED

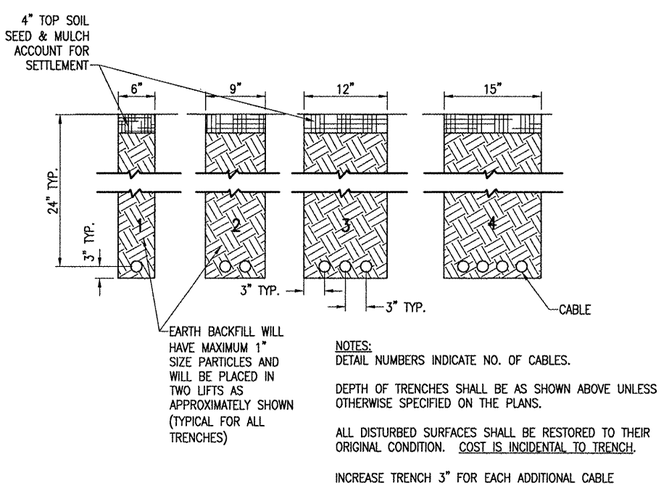

NOTES:
DETAIL NUMBERS INDICATE NO. OF CABLES.

DEPTH OF TRENCHES SHALL BE AS SHOWN ABOVE UNLESS OTHERWISE SPECIFIED ON THE PLANS.

ALL DISTURBED SURFACES SHALL BE RESTORED TO THEIR ORIGINAL CONDITION. COST IS INCIDENTAL TO TRENCH.

INCREASE TRENCH 3" FOR EACH ADDITIONAL CABLE

CABLE TRENCHED
(NOT TO SCALE)

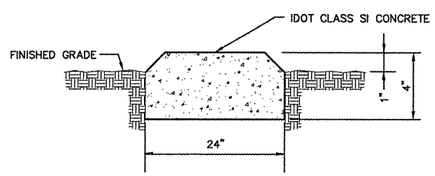

CONCRETE MARKER

NOTES:

1. CABLE MARKERS SHALL BE PLACED AT CHANGES OF DIRECTION AND EVERY 200' ALONG CABLE RUNS.
2. LETTERS 4" HIGH, 3" WIDE WITH WIDTH OF STROKE 1/2" AND 1/4" DEEP. ALL LETTERS, NUMBERS AND ARROWS TO BE IMPRESSED.

TURF CABLE MARKERS

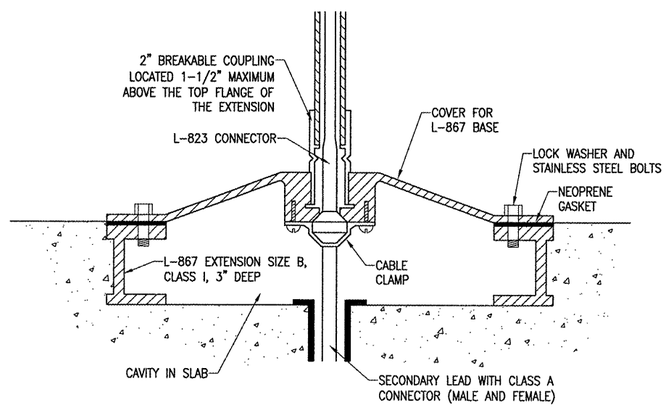

DETAIL "A"
(NOT TO SCALE)

LE040

HANSON

HANSON PROFESSIONAL SERVICES INC.

815 Commerce Drive, Suite 200
Oak Brook, Illinois 60523
Telephone: 630.990.3800
Fax: 630.990.3801

Illinois Professional Design Firm
Registration No. 184-001084

© Copyright Hanson Professional Service Inc. 2008

Chicago-Romeoville Airport

JOLIET REGIONAL PORT DISTRICT

1 George Michas Drive
Romeoville, Illinois 60446
Telephone: 815.838.9497
Fax: 815.838.9524

COMPLETE TAXIWAY G

AIP PROJECT NO. 3-17-0140-B43
IDA PROJECT NO. LOT-3883

No.	Drawing Issue Description	Date	By

Date
JANUARY 30, 2009

Sheet Title

ELECTRICAL DETAILS

08A0122	Project Number
KNL	06/19/08 Layout By Date
KNL	06/19/08 Designed By Date
RMH	01/30/09 Reviewed By Date
MV	Drawn By

Sheet No. 25

I:\08JOBS\08940\08A0122\DRAWINGS\SHEETS\25-ELECTRICAL DETAILS.DWG FEB 27, 2009 11:03AM HAUSMOBGZ