04-24-2015 LETTING ITEM 069

F.A.P RTE.	SECTION	COUNTY	TOTAL SHEETS	SHEET NO.
685/538	(112)RS-3,L,N,I	HANCOCK	156 *	1
FED. ROAD DIST. NO. 6	ILLINOIS	CONTRACT NO. 72C60		

*156-1 + 16 = 171 TOTAL SHEETS

STATE OF ILLINOIS
DEPARTMENT OF TRANSPORTATION
DIVISION OF HIGHWAYS

FOR INDEX OF SHEETS AND HIGHWAY STANDARDS, SEE SHEET NO. 2

PROPOSED
HIGHWAY PLANS

FAP ROUTE 685 (IL 9) & FAP ROUTE 538 (IL 94)
SECTION 112RS-3,L,N,I
PROJECT: ACF-ACHSIP-0070(010)
INTERSECTION, RESURFACING, SHOULDER IMPROVEMENT
HANCOCK COUNTY

C-96-039-09

D-96-039-09

LOCATION OF SECTION INDICATED THUS:-

DESIGN DESIGNATION:
FAP 685 (IL 9) & FAP 538 (IL 94)
MINOR ARTERIAL
IL 94 ADT = 1250 (2012) 1600 (2032)
%SU = 8
%MU = 7
IL 9 ADT = 3550 (2012) 4200 (2032)
%SU = 7
%MU = 2

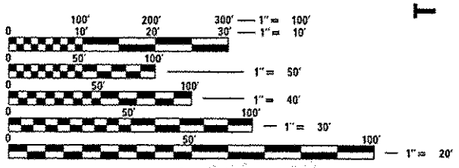

FULL SIZE PLANS HAVE BEEN PREPARED USING STANDARD ENGINEERING SCALES. REDUCED SIZED PLANS WILL NOT CONFORM TO STANDARD SCALES. IN MAKING MEASUREMENTS ON REDUCED PLANS, THE ABOVE SCALES MAY BE USED.

J.U.L.I.E.
JOINT UTILITY LOCATION INFORMATION FOR EXCAVATION
1-800-892-0123
OR 811

R 6 W — R 5 W — T 7 N

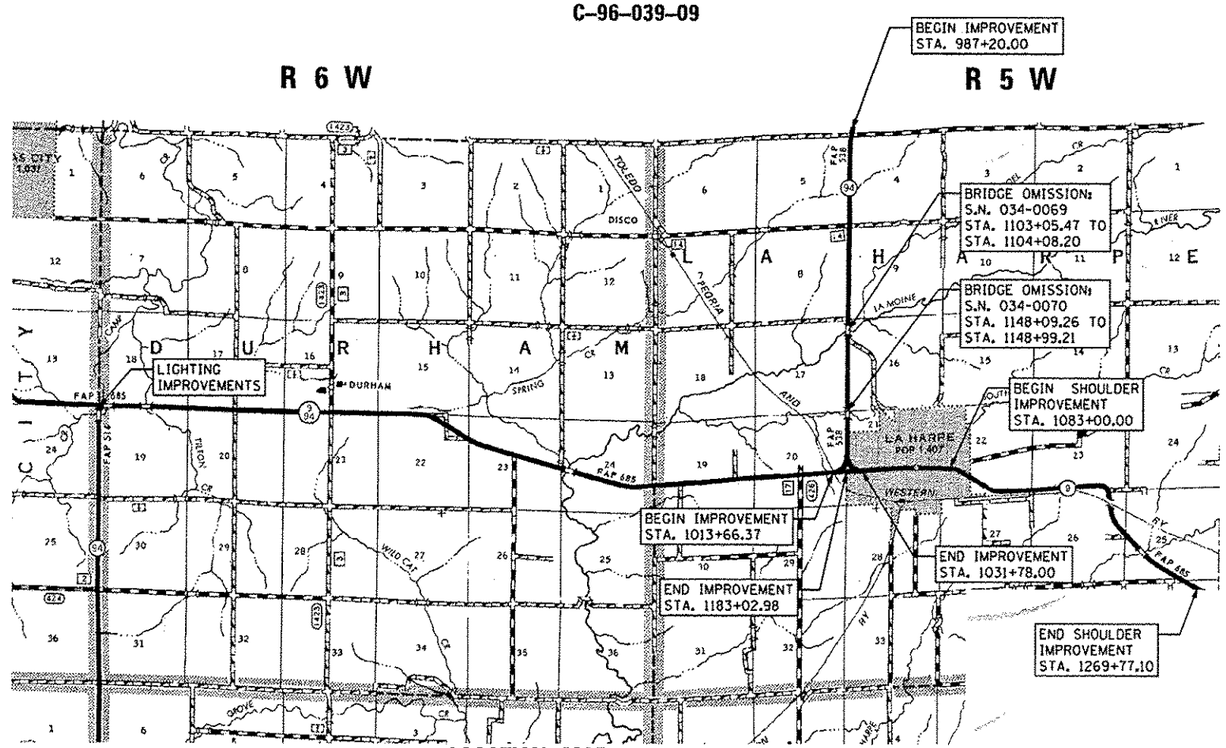

LOCATION MAP
SCALE: 1" = 4000'

N

GROSS LENGTH OF SECTION (IL 94) = 19,582.98 FT = 3.709 MILES
NET LENGTH OF SECTION (IL 94) = 19,390.30 FT = 3.672 MILES
GROSS/NET LENGTH OF SECTION (IL 9) = 1,013.79 FT = 0.192 MILES
GROSS/NET LENGTH OF SECTION (IL 9 & IL 94) = 797.84 FT = 0.151 MILES
GROSS/NET LENGTH OF SECTION (IL 9 SHOULDERS) = 18,677.10 FT = 3.537 MILES
NET LENGTH OF SECTION (112RS-3) = 39,879.03 FT = 7.552 MILES

STATE OF ILLINOIS
DEPARTMENT OF TRANSPORTATION
DIVISION OF HIGHWAYS

SUBMITTED October 24 2014
Ryan Z Driskell
DEPUTY DIRECTOR OF HIGHWAYS, REGION ENGINEER
Dec 18 2014
John D. Baranzelli, P.E.
acting ENGINEER OF DESIGN AND ENVIRONMENT
Dec 18 2014
Omer Osman, P.E.
DIRECTOR OF HIGHWAYS, CHIEF ENGINEER

PROJECT ENGINEER: VINCE MADONIA (217) 785-9046
TEAM ENGINEER: JAY EDWARDS (217) 785-5321

CONTRACT NO. 72C60

PRINTED BY THE AUTHORITY OF THE STATE OF ILLINOIS

INDEX OF SHEETS

* 76 DELETED

Δ INCLUDES 81A & 81B

◻ INCLUDES 84A - 84F & 97A - 97H

STANDARDS

STANDARD NOS.

000001-06	602411-04	606306-03	701011-04	728001-01
280001-07	602416-04	630001-10	701201-04	729001-01
406201-01	602601-03	631031-13	701301-04	731001-01
442201-03	602701-02	635006-03	701306-03	780001-05
542301-03	604001-04	635011-02	701311-03	781001-03
542401-01	604036-03	642006	701326-04	782001
602301-04	604106-01	666001-01	701501-06	825001-02
602306-03	606001-06	667101-02	701901-04	~~830016-02~~
602401-03	606101-04	701002-02	720001-01	836001-02
602406-06	606301-04	701006-05	720006-04	830006-03
		701002-02		821101-01
				838001

RATES OF APPLICATION TABLE

AGGREGATE (SURFACE, BASE, SUBBASE, OR BACKFILL)	2.05 TON / CU YD
STONE DUMPED RIPRAP	1.50 TON / CU YD
HOT-MIX ASPHALT:	
BITUMINOUS MATERIALS (PRIME COAT)	0.05 LB / SQ FT (MILLED AND AGED HMA, CONCRETE)
BITUMINOUS MATERIALS (PRIME COAT)	0.025 LB / SQ YD (FOG COAT BTW LIFTS, IL-4.75, BRICK)
AGGREGATE PRIME COAT	0.002 TON / SQ YD
SURFACE / BINDER (112 lbs)	0.056 TON / SQ YD * IN
SEEDING:	
NITROGEN FERTILIZER NUTRIENT	90 LBS / ACRE
PHOSPHORUS FERTILIZER NUTRIENT	90 LBS / ACRE
POTASSIUM FERTILIZER NUTRIENT	90 LBS / ACRE
AGRICULTURAL GROUND LIMESTONE	2.0 TON / ACRE
MULCH METHOD	2.0 TON / ACRE

COMMITMENTS

1. FIELD/RESIDENT ENGINEER SHALL CONTACT STUDIES AND PLANS CONCERNING ANY MAJOR PLAN CHANGE TO MAKE SURE NO PREVIOUS COMMITMENTS (NOT LISTED) WERE MADE AFFECTING THE DESIGN, AND ALLOW AN IMPROVED DESIGN FOR FUTURE PROJECTS.

GENERAL NOTES

1. ROADWAY IMPROVEMENTS ARE BROKEN DOWN INTO MULTIPLE CONSTRUCTION TYPE CODES. CODE 0001 (NEW CONSTRUCTION) IS DEFINED AS ALL IMPROVEMENTS ASSOCIATED WITH THE RECONSTRUCTION OF THE Y-INTERSECTION INCLUDING ALL OF IL 9. CODE 0005 (RESURFACING) IS DEFINED AS ALL IL 94 IMPROVEMENTS NORTH OF THE Y-INTERSECTION. THE SEPARATE BREAKOUTS ARE PROVIDED IN THE SUMMARY OF QUANTITIES.

2. THE THICKNESS OF BITUMINOUS MIXTURES SHOWN ON THE PLANS IS THE NOMINAL THICKNESS. DEVIATIONS FROM THE NOMINAL THICKNESS WILL BE PERMITTED WHEN SUCH DEVIATIONS OCCUR DUE TO IRREGULARITIES IN THE EXISTING SURFACE OR BASE ON WHICH THE BITUMINOUS MIXTURE IS PLACED.

3. THE CONTRACTOR SHALL PROTECT AND CAREFULLY PRESERVE ALL PROPERTY MARKERS AND MONUMENTS UNTIL THE OWNER, AUTHORIZED AGENT, OR LAND SURVEYOR HAS WITNESSED OR OTHERWISE REFERENCED THEIR LOCATION. WHERE SECTION OR SUB-SECTION MONUMENTS ARE ENCOUNTERED, THE ENGINEER SHALL BE NOTIFIED BEFORE SUCH MONUMENTS ARE REMOVED. THE CONTRACTOR SHALL BE RESPONSIBLE FOR HAVING AN AUTHORIZED SURVEYOR RE-ESTABLISH ANY SECTION OR SUB-SECTION MONUMENTS DESTROYED BY HIS OPERATIONS.

4. ALL DISTURBED AREAS WITHIN THE RIGHT-OF-WAY SHALL BE SEEDED, FERTILIZED, AND MULCHED AS SHOWN IN THE PLANS AND AS DIRECTED BY THE ENGINEER.

5. DO NOT INCLUDE MULCH OR EMULSIFIED ASHPALT ON EROSION CONTROL BLANKET AREAS.

6. THE CONTRACTOR SHALL BE RESPONSIBLE FOR PROTECTING UTILITY PROPERTY FROM CONSTRUCTION OPERATIONS, AS OUTLINED IN ARTICLE 107.31 OF THE STANDARD SPECIFICATIONS. THE J.U.L.I.E. NUMBER IS 1-800-892-0123. A MINIMUM OF 48 HOURS ADVANCE NOTICE IS REQUIRED.

7. THE LOCATION OF BURIED AND ABOVE GROUND UTILITIES SHOWN ARE APPROXIMATE, AND ARE SHOWN FOR CONTRACTOR INFORMATIONAL USE ONLY, AND ARE NOT TO BE REFERENCED FOR CONSTRUCTION PURPOSES. THE IMPLIED PRESENCE OR ABSENCE OF UTILITIES IS NOT TO BE CONSTRUED BY THE OWNER, ENGINEER, CONTRACTOR, OR SUBCONTRACTORS TO BE AN ACCURATE AND COMPLETE REPRESENTATION OF UTILITIES THAT MAY OR MAY NOT EXIST ON THE CONSTRUCTION SITE. BURIED AND ABOVE GROUND UTILITY LOCATIONS, IDENTIFICATION, AND MARKING ARE THE SOLE RESPONSIBILITY OF THE CONTRACTOR. REROUTING DISCONNECTION, PROTECTION, ETC. OF ANY UTILITIES MUST BE COORDINATED BETWEEN THE CONTRACTOR, UTILITY COMPANY, AND OWNER. SITE SAFETY, INCLUDING THE AVOIDANCE OF HAZARDS ASSOCIATED WITH BURIED AND ABOVE GROUND UTILITIES, REMAINS THE SOLE RESPONSIBILITY OF THE CONTRACTOR.

8. IN ADDITION TO FIELD SURVEYS, PLAN DIMENSIONS AND DETAILS RELATIVE TO THE EXISTING FACILITIES HAVE BEEN TAKEN FROM EXISTING PLANS AND ARE SUBJECT TO CONSTRUCTION VARIATIONS. IT SHALL BE THE CONTRACTOR'S RESPONSIBILITY TO VERIFY SUCH DIMENSIONS AND DETAILS IN THE FIELD. SUCH VARIATIONS SHALL NOT BE A CAUSE FOR ADDITIONAL COMPENSATION DUE TO A CHANGE IN THE SCOPE OF WORK; HOWEVER, THE CONTRACTOR WILL BE PAID FOR THE QUANTITY ACTUALLY FURNISHED AT THE UNIT PRICE BID FOR THE WORK.

9. ANY REFERENCE TO A STANDARD IN THESE PLANS SHALL BE INTERPRETED TO MEAN THE EDITION AS INDICATED BY THE SUB-NUMBER IN THE INDEX OF SHEETS OR THE COPY OF THE STANDARD INCLUDED IN THESE PLANS.

10. EXISTING RAISED REFLECTIVE PAVEMENT MARKERS SHALL BE REMOVED PRIOR TO HOT-MIX ASPHALT SURFACE REMOVAL AND/OR RESURFACING.

11. NO PASSING ZONES SHALL BE FIELD VERIFIED BY OPERATIONS, (217) 785-5312, 21 DAYS PRIOR TO FINAL PAVEMENT MARKINGS.

12. ALL SAW CUTS, NECESSARY TO COMPLETE THE WORK DETAILED IN THESE PLANS, SHALL BE INCLUDED IN THE COST FOR THE VARIOUS PAY ITEMS INVOLVED. THE MINIMUM SAW CUT DEPTH IN THE PAVEMENT SHALL BE 1 1/2" UNLESS OTHERWISE SPECIFIED IN A DETAIL SHOWN IN THE PLANS.

13. THE FOLLOWING MIXTURE REQUIREMENTS ARE APPLICABLE FOR THIS PROJECT:

LOCATION(S):			
MIXTURE USE(S):	LEVEL BINDER MM	HMA SURF CSE	HMA BINDER
AC/PG:	PG 64-22	PG 64-22	PG 64-22
DESIGN AIR VOIDS:	4.0% @ N DESIGN=50	4.0% @ N DESIGN=50	4.0% @ N DESIGN=50
MIXTURE COMPOSITION: (GRADATION MIXTURE)	IL 9.5	IL 9.5	IL 19.0
FRICTION AGGREGATE	N/A	MIX "C"	N/A
QUALITY MANAGEMENT	QCP	QCP	QCP

LOCATION(S):	INCIDENTAL SURF, HMA SHLDS (TOP LIFT)	HMA SHLDS (LOWER LIFTS)	HMA BASE COURSE WIDENING & PATCHING
MIXTURE USE(S):			
AC/PG:	PG 64-22	PG 64-22	PG 64-22
DESIGN AIR VOIDS:	4.0% @ N DESIGN=50	4.0% @ N DESIGN=50	4.0% @ N DESIGN=50
MIXTURE COMPOSITION: (GRADATION MIXTURE)	IL 9.5	IL 19.0 OR IL 19.0CB	IL 19.0 OR IL 19.0CB
FRICTION AGGREGATE	MIX "C"	N/A	N/A
QUALITY MANAGEMENT	QC/QA	QC/QA	QC/QA

GENERAL NOTES

14. SEEDING WILL NOT BE PERMITTED AT ANY TIME WHEN THE GROUND IS FROZEN, WET, OR IN AN UNTILLABLE CONDITION. LOCATIONS TO BE SEEDED SHALL BE DETERMINED BY THE ENGINEER.

15. ACCESS TO ALL SIDEROADS SHALL BE MAINTAINED AT ALL TIMES EXCEPT FOR THE ALLOWED CLOSURE OF CLAREMONT DRIVE. ACCESS TO ENTRANCES SHALL BE MAINTAINED AT ALL TIMES.

16. UNLESS DIRECTED BY THE ENGINEER, PAVEMENT MARKING LINES SHALL NOT BE LAID DIRECTLY OVER A LONGITUDINAL CRACK OR JOINT NOR OVER A TAR OR ASPHALT PAINTED LINE. THE EDGE OF A CENTERLINE OR LANE LINE SHALL BE OFFSET A MINIMUM DISTANCE OF 2" FROM A LONGITUDINAL CRACK OR JOINT. EDGE LINES SHALL BE APPROXIMATELY 2" FROM THE EDGE LINE OF PAVEMENT. SEE SECTION 780 OF THE STANDARD SPECIFICATIONS FOR TRAFFIC CONTROL ITEMS.

DISTRICT SIX

EXAMINED OCTOBER 16th 20 14

OPERATIONS ENGINEER

EXAMINED October 8 20 14

Ron Unchambreau

PROJECT IMPLEMENTATION ENGINEER

EXAMINED October 10 20 14

PROGRAM DEVELOPMENT ENGINEER

Rev.

FILE NAME = pw:\\IL084EBIDINTEG.illinois.gov:PWIDOT\Documents\IDOT Offices\District 6\Projects\D672C60\DRAWING\Data\KLINGNER\District edit\CADD SHEETS\72C60-sht-GenNotes.dgn	USER NAME = sparksgr	DESIGNED -	REVISED -
		DRAWN -	REVISED -
	PLOT SCALE = 100.0000 ' / in.	CHECKED -	REVISED -
	PLOT DATE = 10/23/2014	DATE -	REVISED -

STATE OF ILLINOIS
DEPARTMENT OF TRANSPORTATION

SHEET INDEX & GENERAL NOTES

SCALE: none | SHEET NO. 1 OF 1 SHEETS | STA. TO STA.

F.A.P RTE.	SECTION	COUNTY	TOTAL SHEETS	SHEET NO.
685/538	(112)RS-3, L, N, 1	HANCOCK	156	2
		CONTRACT NO. 72C60		

FED. ROAD DIST. NO. 6 | ILLINOIS | FED. AID PROJECT

				(M832) STP 80% FED./20% STATE				(M530) HSIP 90% FED. 10% STATE
				6-00566-0100	6-00566-0000	6-00566-0100	6-00566-0200	6-00769-0000
				WYE INTERSECTION	PPP RESURFACING	N IL 94 & IL 9	S IL 94 & IL 9	IL 9 SAFETY SHOULDER
				ROADWAY	ROADWAY	LIGHTING	LIGHTING	ROADWAY
CODE NO.	ITEM	UNIT	TOTAL QUANTITY	0001 RURAL	0005 RURAL	0021 RURAL	0021 RURAL	0021 RURAL
20100210	TREE REMOVAL (OVER 15 UNITS DIAMETER)	UNIT	470	308	162			
20100500	TREE REMOVAL, ACRES	ACRE	2.0	0.9	1.1			
20200100	EARTH EXCAVATION	CU YD	7591	6682	816			93
20200600	EXCAVATING AND GRADING EXISTING SHOULDERS	UNIT	299					299
20400800	FURNISHED EXCAVATION	CU YD	6044		6044			
20800150	TRENCH BACKFILL	CU YD	215	205	10			
25000200	SEEDING, CLASS 2	ACRE	8.3	5.3	2.4			0.6
25000400	NITROGEN FERTILIZER NUTRIENT	POUND	726	472	208			46
25000500	PHOSPHORUS FERTILIZER NUTRIENT	POUND	726	472	208			46
25000600	POTASSIUM FERTILIZER NUTRIENT	POUND	726	472	208			46
25000700	AGRICULTURAL GROUND LIMESTONE	TON	16.2	10.5	4.7			1
25100115	MULCH, METHOD 2	ACRE	8.3	5.3	2.4			0.6

12

Rev.

CODE NO.	ITEM	UNIT	TOTAL QUANTITY	6-00566-0100 WYE INTERSECTION ROADWAY 0001 RURAL	6-00566-0000 PPP RESURFACING ROADWAY 0005 RURAL	6-00566-0100 N IL 94 & IL 9 LIGHTING 0021 RURAL	6-00566-0200 S IL 94 & IL 9 LIGHTING 0021 RURAL	6-00769-0000 IL 9 SAFETY SHOULDER ROADWAY 0021 RURAL
				STP 80% FED. / 20% STATE				HSIP 90% FED. 10% STATE
28000200	EARTH EXCAVATION FOR EROSION CONTROL	CU YD	15	15				
28000250	TEMPORARY EROSION CONTROL SEEDING	POUND	1613	1050	462			101
28000315	AGGREGATE DITCH CHECKS	TON	138	108	30			
28000400	PERIMETER EROSION BARRIER	FOOT	1059	624	235			200
28000500	INLET AND PIPE PROTECTION	EACH	28	19	5			4
28100707	STONE DUMPED RIPRAP, CLASS A4	SQ YD	1741	737	1004			
28200200	FILTER FABRIC	SQ YD	1741	737	1004			
31100100	SUBBASE GRANULAR MATERIAL, TYPE A	TON	2692	2597	95			
35101400	AGGREGATE BASE COURSE, TYPE B	TON	234	234				
35102400	AGGREGATE BASE COURSE, TYPE B 12"	SQ YD	160	160				
35501310	HOT-MIX ASPHALT BASE COURSE, 6 1/2"	SQ YD	5794	5460	334			
35501314	HOT-MIX ASPHALT BASE COURSE, 7 1/2"	SQ YD	171		171			
35501332	HOT-MIX ASPHALT BASE COURSE, 12"	SQ YD	184	184				

Rev.

				STP 80% FED. / 20% STATE				HSIP 90% FED. 10% STATE
				6-00566-0100	6-00566-0000	6-00566-0100	6-00566-0200	6-00769-0000
				WYE INTERSECTION	PPP RESURFACING	N IL 94 & IL 9	S IL 94 & IL 9	IL 9 SAFETY SHOULDER
				ROADWAY	ROADWAY	LIGHTING	LIGHTING	ROADWAY
CODE NO.	ITEM	UNIT	TOTAL QUANTITY	0001 RURAL	0005 RURAL	0021 RURAL	0021 RURAL	0021 RURAL
40200800	AGGREGATE SURFACE COURSE, TYPE B	TON	45		45			
40201000	AGGREGATE FOR TEMPORARY ACCESS	TON	50	20	30			
40600275	BITUMINOUS MATERIALS (PRIME COAT)	POUND	47897	10127	37770			
40600625	LEVELING BINDER (MACHINE METHOD), N50	TON	2324		2324			
40600982	HOT-MIX ASPHALT SURFACE REMOVAL - BUTT JOINT	SQ YD	1147	313	834			
40600990	TEMPORARY RAMP	SQ YD	300	128	172			
40603080	HOT-MIX ASPHALT BINDER COURSE, IL-19.0, N50	TON	1807	1807				
40603310	HOT-MIX ASPHALT SURFACE COURSE, MIX "C", N50	TON	5673	1013	4660			
40800050	INCIDENTAL HOT-MIX ASPHALT SURFACING	TON	229	79	150			
42001300	PROTECTIVE COAT	SQ YD	898	898				
42300400	PORTLAND CEMENT CONCRETE DRIVEWAY PAVEMENT, 8 INCH	SQ YD	413	413				
44000100	PAVEMENT REMOVAL	SQ YD	2949	2870	79			
44000158	HOT-MIX ASPHALT SURFACE REMOVAL, 2 1/4"	SQ YD	10476		10476			

13

				STP 80% FED. / 20% STATE				HSIP 90% FED. 10% STATE
				6-00566-0100	6-00566-0000	6-00566-0100	6-00566-0200	6-00769-0000
				WYE INTERSECTION	PPP RESURFACING	N IL 94 & IL 9	S IL 94 & IL 9	IL 9 SAFETY SHOULDER
				ROADWAY	ROADWAY	LIGHTING	LIGHTING	ROADWAY
CODE NO.	ITEM	UNIT	TOTAL QUANTITY	0001	0005	0021	0021	0021
				RURAL	RURAL	RURAL	RURAL	RURAL
44000200	DRIVEWAY PAVEMENT REMOVAL	SQ YD	698	698				
44000400	GUTTER REMOVAL	FOOT	826	696	130			
44000500	COMBINATION CURB AND GUTTER REMOVAL	FOOT	40	40				
44004250	PAVED SHOULDER REMOVAL	SQ YD	421	52	369			
44200168	PAVEMENT PATCHING, TYPE II, 14 INCH	SQ YD	43	43				
44200202	PAVEMENT PATCHING, TYPE II, 17 INCH	SQ YD	200		200			
44200204	PAVEMENT PATCHING, TYPE III, 17 INCH	SQ YD	275		275			
44200206	PAVEMENT PATCHING, TYPE IV, 17 INCH	SQ YD	70		70			
48102100	AGGREGATE WEDGE SHOULDER, TYPE B	TON	2808	133	1211			1464
48203023	HOT-MIX ASPHALT SHOULDERS, 6 1/2"	SQ YD	1128		1128			
48203029	HOT-MIX ASPHALT SHOULDERS, 8 "	SQ YD	9970					9970
50100300	REMOVAL OF EXISTING STRUCTURES NO. 1	EACH	1	1				
50100400	REMOVAL OF EXISTING STRUCTURES NO. 2	EACH	1	1				

13

				STP 80% FED./20% STATE				HSIP 90% FED. 10% STATE
				6-00566-0100	6-00566-0000	6-00566-0100	6-00566-0200	6-00769-0000
				WYE INTERSECTION	PPP RESURFACING	N IL 94 & IL 9	S IL 94 & IL 9	IL 9 SAFETY SHOULDER
				ROADWAY	ROADWAY	LIGHTING	LIGHTING	ROADWAY
CODE NO.	ITEM	UNIT	TOTAL QUANTITY	0001 RURAL	0005 RURAL	0021 RURAL	0021 RURAL	0021 RURAL
50100500	REMOVAL OF EXISTING STRUCTURES NO. 3	EACH	1	1				
50105220	PIPE CULVERT REMOVAL	FOOT	569	534	35			
50800105	REINFORCEMENT BARS	POUND	620	280	80			260
54002020	EXPANSION BOLTS 3/4 INCH	EACH	52	16	8			28
54001001	BOX CULVERT END SECTIONS, CULVERT NO. 1	EACH	2	2				
54010404	PRECAST CONCRETE BOX CULVERTS 4' X 4'	FOOT	101	101				
542A0229	PIPE CULVERTS, CLASS A, TYPE 1 24"	FOOT	5		5			
542A0235	PIPE CULVERTS, CLASS A, TYPE 1 30"	FOOT	7.0					7
542A0247	PIPE CULVERTS, CLASS A, TYPE 1 42"	FOOT	248		248			
542A1060	PIPE CULVERTS, CLASS A, TYPE 2 15"	FOOT	61		61			
542A1069	PIPE CULVERTS, CLASS A, TYPE 2 24"	FOOT	38	38				
542A1075	PIPE CULVERTS, CLASS A, TYPE 2 30"	FOOT	7					7
542A1081	PIPE CULVERTS, CLASS A, TYPE 2 36"	FOOT	28	24				4
542A1087	PIPE CULVERTS, CLASS A, TYPE 2 42"	FOOT	82		82			

13

				STP 80% FED. / 20% STATE				HSIP 90% FED. 10% STATE
				6-00566-0100	6-00566-0000	6-00566-0100	6-00566-0200	6-00769-0000
				WYE INTERSECTION	PPP RESURFACING	N IL 94 & IL 9	S IL 94 & IL 9	IL 9 SAFETY SHOULDER
				ROADWAY	ROADWAY	LIGHTING	LIGHTING	ROADWAY
CODE NO.	ITEM	UNIT	TOTAL QUANTITY	0001	0005	0021	0021	0021
				RURAL	RURAL	RURAL	RURAL	RURAL
542A1915	PIPE CULVERTS, CLASS A, TYPE 3 30"	FOOT	31		31			
542A1927	PIPE CULVERTS, CLASS A, TYPE 3 42"	FOOT	23		23			
542D0220	PIPE CULVERTS, CLASS D, TYPE 1 15"	FOOT	299	184	115			
542D1053	PIPE CULVERTS, CLASS D, TYPE 2 8"	FOOT	30		30			
542D1063	PIPE CULVERTS, CLASS D, TYPE 2 18"	FOOT	100	100				
542JA042	PIPE CULVERTS, CLASS A 42" (JACKED)	FOOT	76		76			
5421A018	PIPE CULVERTS, CLASS A, TYPE 1 18" (TEMPORARY)	FOOT	70	70				
54213660	PRECAST REINFORCED CONCRETE FLARED END SECTIONS 15"	EACH	1		1			
54213669	PRECAST REINFORCED CONCRETE FLARED END SECTIONS 24"	EACH	4	2				2
54213675	PRECAST REINFORCED CONCRETE FLARED END SECTIONS 30"	EACH	5		2			3
54213681	PRECAST REINFORCED CONCRETE FLARED END SECTIONS 36"	EACH	4	2				2
54213687	PRECAST REINFORCED CONCRETE FLARED END SECTIONS 42"	EACH	2		2			
54215550	METAL END SECTIONS 15"	EACH	11	10	1			

13

				STP 80% FED/20% STATE				HSIP 90% FED, 10% STATE
				6-00566-0100	6-00566-0000	6-00566-0100	6-00566-0200	6-00769-0000
				WYE INTERSECTION	PPP RESURFACING	N IL 94 & IL 9	S IL 94 & IL 9	IL 9 SAFETY SHOULDER
				ROADWAY	ROADWAY	LIGHTING	LIGHTING	ROADWAY
CODE NO.	ITEM	UNIT	TOTAL QUANTITY	0001 RURAL	0005 RURAL	0021 RURAL	0021 RURAL	0021 RURAL
54215553	METAL END SECTIONS 18"	EACH	2	2				
54248510	CONCRETE COLLAR	CU YD	6.2	3.1	0.7			2.4
550A0340	STORM SEWERS, CLASS A, TYPE 2 12"	FOOT	64	64				
550A0360	STORM SEWERS, CLASS A, TYPE 2 15"	FOOT	68	68				
550A0380	STORM SEWERS, CLASS A, TYPE 2 18"	FOOT	98	98				
550A0410	STORM SEWERS, CLASS A, TYPE 2 24"	FOOT	394	394				
550A0450	STORM SEWERS, CLASS A, TYPE 2 36"	FOOT	74	74				
59300100	CONTROLLED LOW-STRENGTH MATERIAL	CU YD	55	7	48			
60219000	MANHOLES, TYPE A, 4'-DIAMETER, TYPE 8 GRATE	EACH	2	2				
60221700	MANHOLES, TYPE A, 5'-DIAMETER, TYPE 8 GRATE	EACH	2	2				
60223800	MANHOLES, TYPE A, 6'-DIAMETER, TYPE 1 FRAME, CLOSED LID	EACH	2		2			
60224432	MANHOLES, TYPE A, 7'-DIAMETER, WITH MEDIAN INLET (604106)	EACH	3	1	2			
60224446	MANHOLES, TYPE A, 7'-DIAMETER, TYPE 1 FRAME, CLOSED LID	EACH	1		1			
60224448	MANHOLES, TYPE A, 7'-DIAMETER, TYPE 8 GRATE	EACH	1	1				

13

					STP 80% FED./20% STATE			HSIP 90% FED. 10% STATE
				6-00566-0100	6-00566-0000	6-00566-0100	6-00566-0200	6-00769-0000
				WYE INTERSECTION	PPP RESURFACING	N IL 94 & IL 9	S IL 94 & IL 9	IL 9 SAFETY SHOULDER
				ROADWAY	ROADWAY	LIGHTING	LIGHTING	ROADWAY
CODE NO.	ITEM	UNIT	TOTAL QUANTITY	0001	0005	0021	0021	0021
				RURAL	RURAL	RURAL	RURAL	RURAL
60224459	MANHOLES, TYPE A, 8'-DIAMETER, TYPE 1 FRAME, CLOSED LID	EACH	1	1				
60236200	INLETS, TYPE A, TYPE 8 GRATE	EACH	1	1				
60240301	INLETS, TYPE B, TYPE 8 GRATE	EACH	1	1				
60600095	CLASS SI CONCRETE (OUTLET)	CU YD	22.4	12.8	9.6			
60602500	CONCRETE GUTTER, TYPE A	FOOT	741	741				
60608600	COMBINATION CONCRETE CURB AND GUTTER, TYPE M-6.06	FOOT	59	59				
60610400	COMBINATION CONCRETE CURB AND GUTTER, TYPE M-6.24	FOOT	114	114				
60618300	CONCRETE MEDIAN SURFACE, 4 INCH	SQ FT	716	716				
* 63000001	STEEL PLATE BEAM GUARDRAIL, TYPE A, 6 FOOT POSTS	FOOT	375		375			
* 63000003	STEEL PLATE BEAM GUARDRAIL, TYPE A, 9 FOOT POSTS	FOOT	837.5		837.5			
* 63100085	TRAFFIC BARRIER TERMINAL, TYPE 6	EACH	8		8			
* 63100167	TRAFFIC BARRIER TERMINAL, TYPE 1 (SPECIAL) TANGENT	EACH	12		12			
63200310	GUARDRAIL REMOVAL	FOOT	1571		1571			
64200108	SHOULDER RUMBLE STRIPS, 8 INCH	FOOT	29910					29910

* Specialty Items

Rev.

FILE NAME = pw:\\IL084EBI.INTEG.illinois.gov:PWIDOT\Documents\IDOT Offices\District 6\Projects\D6720BRAND\Data\KLINGNER\District edit\CADD STANDARDS\72C60-sht-Summary.dgn	USER NAME = sparkagw	DESIGNED -	REVISED -	STATE OF ILLINOIS DEPARTMENT OF TRANSPORTATION	SUMMARY OF QUANTITIES	F.A.P. RTE.	SECTION	COUNTY	TOTAL SHEETS / SHEET NO.
	PLOT SCALE = 100.0000 ' / in.	CHECKED -	REVISED -			685/538	(1)2)RS-3,L,N,I	HANCOCK	156 / 10
Default	PLOT DATE = 10/23/2014	DATE -	REVISED -		SCALE: SHEET OF SHEETS STA. TO STA.			CONTRACT NO. 72C60	
								ILLINOIS FED. AID PROJECT	

					STP 80% FED./20% STATE				HSIP 90% FED. 10% STATE
				6-00566-0100	6-00566-0000	6-00566-0100	6-00566-0200	6-00769-0000
				WYE INTERSECTION	PPP RESURFACING	N IL 94 & IL 9	S IL 94 & IL 9	IL 9 SAFETY SHOULDER
				ROADWAY	ROADWAY	LIGHTING	LIGHTING	ROADWAY
CODE NO.	ITEM	UNIT	TOTAL QUANTITY	0001 RURAL	0005 RURAL	0021 RURAL	0021 RURAL	0021 RURAL
66600105	FURNISHING AND ERECTING RIGHT OF WAY MARKERS	EACH	11	4	7			
66700205	PERMANENT SURVEY MARKERS, TYPE I	EACH	14	1	13			
* 66900200	NON-SPECIAL WASTE DISPOSAL	CU YD	175	175				
* 66900450	SPECIAL WASTE PLANS AND REPORTS	L SUM	1	1				
* 66900530	SOIL DISPOSAL ANALYSIS	EACH	3	3				
67000400	ENGINEER'S FIELD OFFICE, TYPE A	CAL MO	12	8	2			2
67100100	MOBILIZATION	L SUM	1	0.4	0.4			0.2
70100450	TRAFFIC CONTROL AND PROTECTION, STANDARD 701201	L SUM	1		1			
70100460	TRAFFIC CONTROL AND PROTECTION, STANDARD 701306	L SUM	1		1			
70100500	TRAFFIC CONTROL AND PROTECTION, STANDARD 701326	L SUM	1					1
70102620	TRAFFIC CONTROL AND PROTECTION, STANDARD 701501	L SUM	1	1				
70103815	TRAFFIC CONTROL SURVEILLANCE	CAL DA	10	5	5			
70300100	SHORT TERM PAVEMENT MARKING	FOOT	5532	336	5196			

13

*Specialty Items

FILE NAME = pw:\\IL084EBIDINTEG.illinois.gov:PWIDOT\Documents\IDOT Offices\District 6\Projects\D672CC0\WORKDate\KLINGNER\District edit\CADD\SHEETS\72C60-sht-Summary.dgn	USER NAME = sparkage	DESIGNED -	REVISED -
		CHECKED -	REVISED -
Default	PLOT SCALE = 100.0000 ' / in.	DATE -	REVISED -
	PLOT DATE = 10/23/2014		

STATE OF ILLINOIS
DEPARTMENT OF TRANSPORTATION

SUMMARY OF QUANTITIES

SCALE: SHEET OF SHEETS STA. TO STA.

F.A.P. RTE.	SECTION	COUNTY	TOTAL SHEETS	SHEET NO.
685/538	(112)RS-3,L,N,I	HANCOCK	156	11
		CONTRACT NO. 72C60		
		ILLINOIS FED. AID PROJECT		

					STP 80% FED./20% STATE			HSIP 90% FED. 10% STATE
				6-00566-0100	6-00566-0000	6-00566-0100	6-00566-0200	6-00769-0000
				WYE INTERSECTION	PPP RESURFACING	N IL 94 & IL 9	S IL 94 & IL 9	IL 9 SAFETY SHOULDER
				ROADWAY	ROADWAY	LIGHTING	LIGHTING	ROADWAY
CODE NO.	ITEM	UNIT	TOTAL QUANTITY	0001 RURAL	0005 RURAL	0021 RURAL	0021 RURAL	0021 RURAL
70300210	TEMPORARY PAVEMENT MARKING LETTERS AND SYMBOLS	SQ FT	186	186				
70300230	TEMPORARY PAVEMENT MARKING - LINE 5"	FOOT	127622	11380	116242			
70300240	TEMPORARY PAVEMENT MARKING - LINE 6"	FOOT	606	606				
70300250	TEMPORARY PAVEMENT MARKING - LINE 8"	FOOT	354	354				
70300260	TEMPORARY PAVEMENT MARKING - LINE 12"	FOOT	654	654				
70300280	TEMPORARY PAVEMENT MARKING - LINE 24"	FOOT	78	78				
70301000	WORK ZONE PAVEMENT MARKING REMOVAL	SQ FT	2030	298	1732			
* 72000100	SIGN PANEL - TYPE 1	SQ FT	37	37				
* 72400310	REMOVE SIGN PANEL TYPE 1	SQ FT	87	87				
* 72400500	RELOCATE SIGN PANEL ASSEMBLY TYPE A	EACH	4	4				
* 72400600	RELOCATE SIGN PANEL ASSEMBLY TYPE B	EACH	6	6				
* 72400710	RELOCATE SIGN PANEL TY 1	SQ FT	68	68				
* 72800100	TELESCOPING STEEL SIGN SUPPORT	FOOT	406	406				

13

*Specialty Items

FILE NAME = pw:\\IL084EBIOINTEG.illinois.gov:PWIDOT\Documents\IDOT Offices\District 6\Projects\D677C0\Workspaces\KLINGNER\District sht\CADD Standards\72C60-sht-Summary.dgn	USER NAME = sparkegw	DESIGNED -	REVISED -
	PLOT SCALE = 100.0000 ' / in.	CHECKED -	REVISED -
Default	PLOT DATE = 10/23/2014	DATE -	REVISED -

STATE OF ILLINOIS
DEPARTMENT OF TRANSPORTATION

SUMMARY OF QUANTITIES

SCALE: | SHEET OF SHEETS | STA. TO STA.

F.A.P. RTE.	SECTION	COUNTY	TOTAL SHEETS	SHEET NO.
685/538	(112)RS-3,L,N,I	HANCOCK	156	12
		CONTRACT NO. 72C60		
		ILLINOIS FED. AID PROJECT		

	CODE NO.	ITEM	UNIT	TOTAL QUANTITY	6-00566-0100 WYE INTERSECTION (STP 80% FED. / 20% STATE)	6-00566-0000 PPP RESURFACING (STP 80% FED. / 20% STATE)	6-00566-0100 N IL 94 & IL 9 (STP 80% FED. / 20% STATE)	6-00566-0200 S IL 94 & IL 9 (STP 80% FED. / 20% STATE)	6-00769-0000 IL 9 SAFETY SHOULDER (HSIP 90% FED. 10% STATE)
					ROADWAY	ROADWAY	LIGHTING	LIGHTING	ROADWAY
					0001	0005	0021	0021	0021
					RURAL	RURAL	RURAL	RURAL	RURAL
*	78001120	PAINT PAVEMENT MARKING - LINE 5"	FOOT	116242	4631	55806			55805
*	78001180	PAINT PAVEMENT MARKING - LINE 24"	FOOT	12	12				
*	78004200	PREFORMED PLASTIC PAVEMENT MARKING, TYPE B - INLAID - LETTERS AND SYMBOLS	SQ FT	186	186				
*	78004280	PREFORMED PLASTIC PAVEMENT MARKING, TYPE B - INLAID - LINE 24"	FOOT	78	78				
*	78009005	MODIFIED URETHANE PAVEMENT MARKING - LINE 5"	FOOT	11380	11380				
*	78009006	MODIFIED URETHANE PAVEMENT MARKING - LINE 6"	FOOT	606	606				
*	78009008	MODIFIED URETHANE PAVEMENT MARKING - LINE 8"	FOOT	354	354				
*	78009012	MODIFIED URETHANE PAVEMENT MARKING - LINE 12"	FOOT	654	654				
*	78100100	RAISED REFLECTIVE PAVEMENT MARKER	EACH	358	113	245			
*	78200300	PRISMATIC CURB REFLECTOR	EACH	24	24				
*	78200410	GUARDRAIL MARKERS, TYPE A	EACH	35		35			
*	78201000	TERMINAL MARKER - DIRECT APPLIED	EACH	12		12			
	78300100	PAVEMENT MARKING REMOVAL	SQ FT	259	259				

12

* Specialty Items

	CODE NO.	ITEM	UNIT	TOTAL QUANTITY	6-00566-0100 WYE INTERSECTION (STP 80% FED./20% STATE)	6-00566-0000 PPP RESURFACING (STP 80% FED./20% STATE)	6-00566-0100 N IL 94 & IL 9 (STP 80% FED./20% STATE)	6-00566-0200 S IL 94 & IL 9 (STP 80% FED./20% STATE)	6-00769-0000 IL 9 SAFETY SHOULDER (HSIP 90% FED. 10% STATE)
					ROADWAY	ROADWAY	LIGHTING	LIGHTING	ROADWAY
					0001	0005	0021	0021	0021
					RURAL	RURAL	RURAL	RURAL	RURAL
	78300200	RAISED REFLECTIVE PAVEMENT MARKER REMOVAL	EACH	264	25	239			
*	80400100	ELECTRIC SERVICE INSTALLATION	EACH	2			1	1	
*	81028760	UNDERGROUND CONDUIT, COILABLE NONMETALLIC CONDUIT, 2 1/2" DIA.	FOOT	145			65	80	
*	81603010	UNIT DUCT, 600V, 2-1C NO. 10, 1/C NO. 10 GROUND, (XLP-TYPE USE), 3/4" DIA. POLYETHYLENE	FOOT	650			280	370	
*	82102250	LUMINAIRE, SODIUM VAPOR, HORIZONTAL MOUNT, 250 WATT	EACH	3			1	2	
*	82500300	LIGHTING CONTROLLER, POLE MOUNTED, 240VOLT, 30AMP	EACH	2			1	1	
*	83003600	LIGHT POLE, ALUMINUM, 45 FT. M.H., 15 FT. DAVIT ARM	EACH	3			1	2	
*	83600355	LIGHT POLE FOUNDATION, METAL, 15" BOLT CIRCLE, 8" X 6'	EACH	3			1	2	
*	83800650	BREAKAWAY DEVICE, COUPLING WITH STAINLESS STEEL SCREEN	EACH	8			4	4	
	X0300015	CONCRETE WINGWALL REMOVAL	EACH	10	10				
	X0326899	SOLAR-POWERED FLASHING BEACON ASSEMBLY (COMPLETE)	EACH	3	2	1			
	X0358300	REMOVE AND RELAY END SECTIONS	EACH	1		1			
	X2111000	TOPSOIL EXCAVATION	CU YD	2240	2240				

13

* Specialty Items

FILE NAME = pw:\\IL084EGIDINTEG.illinois.gov:PWIDOT\Documents\IDOT Offices\District 6\Projects\D677[illegible]\KLINCNER\District edit\CADD [illegible]72C60-sht-Summary.dgn	USER NAME = sparkagw	DESIGNED -	REVISED -
	PLOT SCALE = 100.0000 ' / in.	CHECKED -	REVISED -
Default	PLOT DATE = 10/23/2014	DATE -	REVISED -

STATE OF ILLINOIS
DEPARTMENT OF TRANSPORTATION

SUMMARY OF QUANTITIES

SCALE: | SHEET OF SHEETS | STA. TO STA.

F.A.P. RTE.	SECTION	COUNTY	TOTAL SHEETS	SHEET NO.
685/538	(112)RS-3,L,N,I	HANCOCK	156	14
		CONTRACT NO. 72C60		
		ILLINOIS FED. AID PROJECT		

				STP 80% FED. / 20% STATE				HSIP 90% FED. 10% STATE
				6-00566-0100	6-00566-0000	6-00566-0100	6-00566-0200	6-00769-0000
				WYE INTERSECTION	PPP RESURFACING	N IL 94 & IL 9	S IL 94 & IL 9	IL 9 SAFETY SHOULDER
				ROADWAY	ROADWAY	LIGHTING	LIGHTING	ROADWAY
CODE NO.	ITEM	UNIT	TOTAL QUANTITY	0001	0005	0021	0021	0021
				RURAL	RURAL	RURAL	RURAL	RURAL
X4401198	HOT-MIX ASPHALT SURFACE REMOVAL, VARIABLE DEPTH	SQ YD	43467	121	43346			
X4405020	LONGITUDINAL PARTIAL DEPTH REMOVAL 2"	FOOT	4592		4592			
X4420900	LONGITUDINAL PARTIAL DEPTH PATCHING	TON	172		172			
X4811300	AGGREGATE SHOULDERS, TYPE B (SPECIAL)	TON	143		143			
X5015225	PIPE CULVERT REMOVAL (SPECIAL)	FOOT	5	5				
X7010216	TRAFFIC CONTROL AND PROTECTION, (SPECIAL)	L SUM	1	1				
Z0013798	CONSTRUCTION LAYOUT	L SUM	1	1				
Z0041500	PLUG EXISTING CULVERTS	EACH	3	1	2			
Z0048665	RAILROAD PROTECTIVE LIABILITY INSURANCE	L SUM	1	1				
* Z0054404	ROCK FILL - EMBANKMENT	CU YD	76		76			
Z0073002	TEMPORARY SOIL RETENTION SYSTEM	SQ FT	1280	1280				
Ø Z0076600	TRAINEES	HOUR	1000	1000				
Ø Z0076604	TRAINEES - TRAINING PROGRAM GRADUATE	HOUR	1000	1000				

Rev.

Ø 0042
* Specialty Items

FILE NAME =	USER NAME = sparkagu	DESIGNED -	REVISED -
pw:\\ILBB4EBIOINTEG.illinois.gov:PWIDOT\Documents\IDOT Offices\District 6\Projects\D672C60\Data\KLINGNER\District edit\CADD		CHECKED -	REVISED -
	PLOT SCALE = 100.0000 ' / in.	DATE -	REVISED -
Default	PLOT DATE = 10/23/2014		

STATE OF ILLINOIS
DEPARTMENT OF TRANSPORTATION

SUMMARY OF QUANTITIES

SCALE: | SHEET OF SHEETS | STA. TO STA.

F.A.P. RTE.	SECTION	COUNTY	TOTAL SHEETS	SHEET NO.
685/538	(1)2RS-3,L,N,I	HANCOCK	156	15
		CONTRACT NO. 72C60		
	ILLINOIS	FED. AID PROJECT		

EARTHWORK SCHEDULE

20200100

LOCATION STATION TO STATION	SIDE	EARTH EXCAVATION CU YD	EARTH EXCAVATION ADJUSTED 25% CU YD	EMBANKMENT CU YD	EARTHWORK BALANCE CU YD
STAGE 1					
FAP 685 (IL 9)					
1018+29 1025+19	LT	263	198	198	0
CURVE A					
103+50 104+50	RT	47	36	0	36
SUB-TOTAL STAGE 1 (WYE)		310	234	198	36
STAGE 2					
FAP 685 (IL 9)					
1012+27 1013+50	LT & RT	97	73	51	22
1013+98 1031+78	RT	537	403	253	150
1013+60 1031+78	LT	1526	1145	565	580
CURVE A					
105+00 107+50	LT & RT	0	0	231	(231)
CURVE B					
105+00 107+50	LT & RT	705	529	35	494
SUB-TOTAL STAGE 2 (WYE)		2865	2150	1135	1015
FAP 685 (IL 9)					
1118+86 1120+86	LT & RT	24	18	144	(126)
1137+64 1139+64	LT & RT	43	33	101	(68)
1171+31 1173+33	LT & RT	0	0	105	(105)
1188+53 1190+54	LT & RT	26	20	86	(66)
SUB-TOTAL (SAFETY)		93	71	436	(365)
FAP 538 (IL 94)					
PPP					
1100+50 1108+00	LT & RT			500	(500)
1118+50 1125+50	LT & RT	688	516	3434	(2918)
1145+40 1151+20	LT & RT			500	(500)
1172+00 1176+85	LT & RT	51	39	949	(910)
SUBTOTAL (PPP)		739	555	5383	(4828)
WYE					
1176+85 1182+79	LT & RT	3507	2631	3188	(557)
SUBTOTAL (WYE)		3507	2631	3188	(557)
TOTALS		7514	5641	10340	(4699)

20400800 FURNISHED EXCAVATION TOTAL = 4699 CU YD

EARTH EXCAVATION (WIDENING)

20200500

STATION TO STATION		SIDE	CU YD
FAP 538 (IL 94) - 0005 FUNDING			
1100+52.2	1103+05.3	RT	15.2
1101+27.2	1103+05.3	LT	10.7
1104+08.2	1105+73.8	RT	10.0
1104+08.2	1106+61.3	LT	15.2
1145+40.1	1148+05.9	RT	16.0
1146+34.5	1148+12.6	LT	10.7
1148+95.8	1150+48.8	RT	9.2
1149+02.7	1151+18.4	LT	13.0
TOTAL			100.0
USE			101

NOTE: THIS SCHEDULE USED FOR HOT-MIX ASPHALT SHOULDERS ONLY.

RIPRAP AND FILTER FABRIC

STATION TO STATION		SIDE	WIDTH	28100707 CLASS A4 SQ YD	28200200 FILTER FABRIC SQ YD
FAP 538 (IL 94)					
1177+20.2	1178+50	RT	VARIES	276.5	276.5
1177+68.4	1179+00	LT	VARIES	270.5	270.5
FAP 685 (IL 9)					
1023+40.0	1023+60	LT	16.0	35.6	35.6
TOTAL WYE QUANTITY				582.5	582.5
USE				583	583
FAP 538 (IL 94)					
1104+08.2	1108+00	RT	25 & VARIES	1087.5	1087.5
1115+10.0	1115+75	LT	10.0	73.7	73.7
1119+51.6	1120+25	RT	VARIES	138.0	138.0
TOTAL PPP QUANTITY				1299.2	1299.2
USE				1300	1300
TOTAL				1883	1883

SEEDING SCHEDULE

STATION TO STATION		SIDE	WIDTH	SQ FT	SEEDING, CLASS 2 25000200 ACRE	NITROGEN FERTILIZER NUTRIENT 25000400 POUND	PHOSPHORUS FERTILIZER NUTRIENT 25000500 POUND	POTASSIUM FERTILIZER NUTRIENT 25000600 POUND	AGRICULTURAL GROUND LIMESTONE 25000700 TON	MULCH, METHOD 2 25100115 ACRE	TEMP ERO CONTROL SEEDING 28000250 POUNDS
FAP 538 (IL 94)											
1100+00	1103+0	RT	VARIES	6782	0.16	14.0	14.0	14.0	0.3	0.16	31.1
1100+80	1103+0	LT	VARIES	7396	0.17	15.3	15.3	15.3	0.3	0.17	34.0
1104+05	1107+0	LT	VARIES	6605	0.15	13.6	13.6	13.6	0.3	0.15	30.3
1119+00	1121+0	RT	VARIES	14356	0.33	29.7	29.7	29.7	0.7	0.33	65.9
1119+70	1124+0	LT	VARIES	29934	0.69	61.8	61.8	61.8	1.4	0.7	137.4
1145+00	1148+0	RT	VARIES	6771	0.16	14.0	14.0	14.0	0.3	0.16	31.1
1146+00	1148+0	LT	VARIES	4793	0.11	9.9	9.9	9.9	0.2	0.11	22.0
1149+00	1151+0	RT	VARIES	4863	0.11	10.0	10.0	10.0	0.2	0.11	22.3
1149+00	1151+7	LT	VARIES	6642	0.15	13.7	13.7	13.7	0.3	0.15	30.5
1172+00	1175+0	RT	VARIES	8866	0.20	18.3	18.3	18.3	0.4	0.2	40.7
1172+00	1174+2	LT	VARIES	3481	0.08	7.2	7.2	7.2	0.2	0.1	16.0
SUBTOTAL (PPP)					2.31	207.6	207.6	207.6	4.61	2.31	461.4
USE					2.4	208	208	208	4.7	2.4	462.0
FAP 538 (IL 94)											
1175+00	1177+5	RT	VARIES	20626	0.47	42.6	42.6	42.6	0.9	0.5	94.7
1177+50	1182+0	RT	VARIES	44308	1.02	91.5	91.5	91.5	2.0	1.0	203.4
1174+25	1177+5	LT	VARIES	9445	0.22	19.5	19.5	19.5	0.4	0.2	43.4
1177+50	1182+0	LT	VARIES	54446	1.25	112.5	112.5	112.5	2.5	1.2	250.0
FAP 685 (IL 9)											
1013+50	1021+2	LT	VARIES	38360	0.88	79.3	79.3	79.3	1.8	0.9	176.1
1022+25	1031+7	LT	VARIES	27401	0.63	56.6	56.6	56.6	1.3	0.6	125.8
1013+75	1031+7	RT	VARIES	33943	0.78	70.1	70.1	70.1	1.6	0.8	155.8
TOTAL (WYE)					5.25	472.2	472.2	472.2	10.49	5.25	1049.3
USE					5.3	472	472	472	10.5	5.3	1050
FAP 685 (IL 9)											
1119+13	1120+61	LT	VARIES	3052	0.07	6.3	6.3	6.3	0.1	0.1	14.0
1119+13	1120+61	RT	VARIES	3135	0.07	6.5	6.5	6.5	0.1	0.1	14.4
1137+90	1139+3	LT	VARIES	3147	0.07	6.5	6.5	6.5	0.1	0.1	14.4
1137+90	1139+3	RT	VARIES	3174	0.07	6.6	6.6	6.6	0.1	0.1	14.6
1171+54	1173+0	RT	VARIES	3021	0.07	6.2	6.2	6.2	0.1	0.1	13.9
1188+79	1190+2	RT	VARIES	3213	0.07	6.6	6.6	6.6	0.1	0.1	14.8
1188+79	1190+2	LT	VARIES	3125	0.07	6.5	6.5	6.5	0.1	0.1	14.3
SUBTOTAL (SAFETY)					0.50	45.2	45.2	45.2	1.00	0.50	100.4
USE					0.6	46	46	46	1.0	0.6	101
				TOTAL	8.3	726	726	726	16.2	8.3	1613.0

TREE REMOVAL (OVER 15 UNITS DIAMETER)

20100210

STATION	SIDE	OFFSET	UNITS
FAP 538 (IL 94)			
1149+43.0	LT	27.5	36
1149+47.0	LT	25	39
1150+99.0	RT	21.5	31
1151+48.0	RT	22	27
1151+74.0	LT	23.5	29
SUBTOTAL (PPP)			162
FAP 538 (IL 94)			
1180+36.6	RT	45	34
1180+46.4	LT	19	25
1180+70.2	RT	47.8	22
1181+32.2	RT	23.4	25
1181+83.1	LT	32.8	26
1182+09.0	RT	51.9	20
1182+20.5	LT	11	23
1182+45.7	RT	16.2	33
1182+73.0	LT	28.6	24
FAP 685 (IL 9)			
1019+90.4	LT	104.4	26
1020+31.9	LT	59.4	28
1020+64.5	LT	29.1	19
1022+83.5	LT	62.1	34
1023+66.7	LT	103.2	25
1024+13.4	LT	47.2	23
SUBTOTAL (WYE)			387
TOTAL			549

EROSION CONTROL SCHEDULE

ITEM	UNIT	TOTAL
PERIMETER EROSION BARRIER	FOOT	1059
INLET AND PIPE PROTECTION	EACH	28
AGGREGATE DITCH CHECKS	TON	138
EARTH EXCAVATION FOR EROSION CONTROL	CU YD	15

THE SCHEDULE FOR EROSION CONTROL IS AN ESTIMATED QUANTITY. IT MAY BE REDUCED, INCREASED, OR DELETED BY THE ENGINEER BASED ON ACTUAL FIELD CONDITIONS. NO WORK INVOLVING THIS ESTIMATED QUANTITY SHALL BE PERFORMED WITHOUT THE DIRECTION AND APPROVAL OF THE ENGINEER.

TREE REMOVAL, ACRES

20100500

STATION TO STATION		SIDE	WIDTH	SQ FT	ACRE
FAP 538 (IL 94)					
1119+70	1124+00	LT	80	30427	0.70
1119+00	1121+04	RT	40	14837.5	0.34
1149+00	1151+20	LT	30	6600	0.15
1149+00	1150+50	RT	29	4350	0.10
SUBTOTAL (PPP)					1.29
USE					1.3

STATION TO STATION		SIDE	WIDTH	SQ FT	ACRE
FAP 538 (IL 94)					
1176+90	1178+25	RT	40	23946	0.55
1177+75	1179+60	LT	40	16446	0.38
SUBTOTAL (WYE)					0.93
USE					1.0
TOTAL					2.3

FILE NAME = pw:\\IL084ERIDINTEG:IL:none.gordPW\DOT\Documents\IDOT Offices\District 6\Projects\DG72C60\DataData\ILENGINEER\District adm\CADD SHEETS\72C60-sht-Schedules.dgn	USER NAME = sparkagy	DESIGNED -	REVISED -
Default	PLOT SCALE = 100.0000 ' / in.	CHECKED -	REVISED -
	PLOT DATE = 10/23/2014	DATE -	REVISED -

STATE OF ILLINOIS
DEPARTMENT OF TRANSPORTATION

SCHEDULE OF QUANTITIES

SCALE: SHEET OF SHEETS STA. TO STA.

F.A.P. RTE.	SECTION	COUNTY	TOTAL SHEETS	SHEET NO.
685/538	(1)2)RS-3,L,N,)	HANCOCK	156	16
		CONTRACT NO. 72C60		
		ILLINOIS FED. AID PROJECT		

SUBBASE GRANULAR MATERIAL, TYPE A

31100100

STATION TO STATION		SIDE	AREA sq ft	DEPTH inches	TON
FAP 538 (IL 94)					
CLAREMONT DR		LT	1862.7	8.0	94.3
USE (PPP)					95
FAP 538 (IL 94)					
1178+89.2	1182+78.9	LT & RT	27250.1	8.0	1379.3
FAP 685 (IL 9)					
1013+58.0	1014+89.1	LT	721.1	8.0	36.5
1014+89.0	1019+62.0	RT	4730.0	8.0	239.4
1014+89.1	1016+93.9	LT	2421.5	8.0	122.6
1016+93.9	1018+28.5	LT	942.2	8.0	47.7
1018+28.5	1018+65.0	LT	657.0	8.0	33.3
1018+65.0	1025+18.3	LT	10751.6	8.0	544.2
1025+18.3	1031+78.0	LT	3831.3	8.0	193.9
SUBTOTAL (WYE)					2596.9
USE					2597
TOTAL					2692

AGGREGATE BASE COURSE, TYPE B 12"

35102400

STATION TO STATION		SIDE	SQ YD
FAP 538 (IL 94) - 0001 FUNDING			
1179+00.0	1179+75.0	LT	120.0
1179+28.0	1179+75.0	RT	40.0
TOTAL			160.0
USE			160

HOT-MIX ASPHALT BASE COURSE, 6 1/2"

35501310

STATION TO STATION		SIDE	WIDTH	SQ YD
FAP 538 (IL 94)				
1119+00.0	1124+00.0	RT/LT	6.0	333.3
SUBTOTAL (PPP)				333.3
USE				334
FAP 538 (IL 94)				
1175+15.5	1178+09.4	RT	4.0	130.6
1179+14.3	1182+03.9	RT	4.0	128.7
1176+56.0	1177+88.7	LT	4.0	59.0
1178+89.4	1180+53.4	LT	3.0	54.7
1180+53.4	1181+60.7	LT	4.0	47.7
1178+89.2	1182+78.9	LT & RT	VARIES	2348.6 •
FAP 685 (IL 9)				
1014+35.0	1014+98.1	LT	4.0	28.0
1014+98.1	1017+21.3	LT	VARIES	203.3 •
1018+28.2	1019+77.2	LT	4.0	66.2
1019+77.2	1021+47.9	LT	4.0	90.4
1021+99.8	1023+18.6	LT	4.0	75.0
1023+18.6	1025+18.4	LT	4.0	88.8
1026+33.8	1031+05.0	LT	4.0	209.4
1014+35.0	1014+99.9	RT	4.0	28.8
1014+99.9	1019+52.6	RT	7.0	352.1
1019+52.6	1031+05.0	RT	4.0	512.2
1018+28.5	1025+18.3	LT & RT	EOP TO EOP	1036.4
SUBTOTAL (WYE)				5459.9
USE				5460
TOTAL				5794

• USED FOR HMA PAVEMENT. WIDTHS OF 4'-7' ARE USED FOR HMA MAINLINE SHOULDERS.

HOT-MIX ASPHALT BASE COURSE, 12" (SHLD)

35501332

STATION TO STATION		SIDE	WIDTH	SQ YD
FAP 685 (IL 9) - 0001 FUNDING				
1013+59.1	1014+35.0	LT	4.0	33.8
1013+73.7	1014+35.0	RT	4.0	27.3
1031+05.0	1031+78.0	LT	4.0	32.4
1031+05.0	1031+78.0	RT	4.0	90.4
TOTAL				183.9
USE				184

LEVELING BINDER (MACHINE METHOD), N50

40600625

STATION TO STATION		AVE WIDTH foot	SURFACE AREA sq yd	AVE DEPTH inch	TON
FAP 538 (IL 94)					
987+50.00	1019+06.00	26.0	9117.3	3/4	382.9
1019+06.00	1019+56.00	29.0	161.1	3/4	6.8
1019+56.00	1022+10.00	32.0	903.1	3/4	37.9
1022+10.00	1022+60.00	29.0	161.1	3/4	6.8
1022+60.00	1100+52.15	26.0	22510.7	3/4	945.4
1100+52.15	1101+27.15	29.0	241.7	3/4	10.2
1101+27.15	1102+75.47	32.0	527.4	3/4	22.1
1104+38.20	1105+73.84	32.0	482.3	3/4	20.3
1105+73.84	1106+61.34	29.0	281.9	3/4	11.8
1106+61.34	1119+00.00	26.0	3578.4	3/4	150.3
1119+00.00	1124+00.00	32.0	1777.8	3/4	74.7
1118+50.00	1124+50.00	VARIES TO CORRECT SLOPE			21.6
1124+00.00	1145+40.11	26.0	6182.5	3/4	259.7
1145+40.11	1146+34.51	29.0	304.2	3/4	12.8
1146+34.51	1147+57.26	32.0	436.4	3/4	18.3
1149+51.21	1150+48.75	32.0	346.8	3/4	14.6
1150+48.75	1151+18.39	29.0	224.4	3/4	9.4
1151+18.39	1175+15.50	26.0	6925.0	3/4	290.8
1175+15.50	1176+56.00	29.0	452.7	3/4	19.0
1176+56.00	1176+62.00	32.0	21.3	3/4	0.9
1176+62.00	1176+85.00	32.0	81.8	1 1/2	6.9
TOTAL PPP QUANTITY					2323.2
USE					2324

HOT-MIX ASPHALT SURFACE REMOVAL - BUTT JOINT

40600982

STATION TO STATION		SIDE	WIDTH	SQ YD
FAP 685 (IL 9)				
1012+27.31	1012+47.	LT & RT	24.0	53.3
1031+05.00	1031+78.	LT & RT	32.0	259.6
TOTAL WYE QUANTITY				312.9
USE				313
STATION TO STATION		SIDE	WIDTH	SQ YD
FAP 538 (IL 94)				
987+20.00	987+35.0	LT & RT	26.0	43.3
1102+90.47	1103+05.	LT & RT	26.0	43.3
1104+08.20	1104+23.	LT & RT	26.0	43.3
1147+72.30	1147+87.	LT & RT	26.0	43.3
1148+77.20	1148+92.	LT & RT	26.0	43.3
SUBTOTAL PPP MAINLINE QUANTITY				216.7
USE				217
TOTAL				530

SEE ENTRANCE SCHEDULE FOR ADDITIONAL QUANTITY

HOT-MIX ASPHALT BINDER COURSE, IL-19.0, N50

40603080

STATION TO STATION		SIDE	AVE WIDTH foot	SURFACE AREA sq yd	AVE DEPTH inch	TON
FAP 538 (IL 94)						
1176+85.00	1178+89.16	LT & RT	VARIES	747.5	7	293.0
1178+89.16	1182+78.91	LT & RT	VARIES	2766.2	2 1/4	348.5
FAP 685 (IL 9)						
1014+41.48	1014+50.00	LT & RT	32.0	30.3	2 1/4	3.8
1014+50.00	1030+10.00	LT & RT	VARIES	6914.1	3	1161.6
TOTAL (WYE)						1807.0
USE						1807

HOT-MIX ASPHALT SURFACE COURSE, MIX "C", N50

40603310

STATION TO STATION		SIDE	AVE WIDTH foot	SURFACE AREA sq yd	AVE DEPTH inch	TON
FAP 538 (IL 94)						
1176+85.00	1178+89.16	LT & RT	VARIES	747.5	1 1/2	62.8
1178+89.16	1182+78.91	LT & RT	VARIES	2766.2	1 1/2	232.4
FAP 685 (IL 9)						
1012+27.31	1012+47.31	LT & RT	32.0	71.1	1 1/2	6.0
1012+47.31	1013+55.10	LT & RT	32.0	383.3	2 1/4	48.3
1013+66.37	1014+22.61	LT & RT	32.0	200.0	1 1/2	16.8
1014+22.61	1014+41.48	LT & RT	32.0	67.1	2 1/4	8.5
1014+41.48	1030+10.00	LT & RT	VARIES	6914.1	1 1/2	580.8
1030+10.00	1031+05.00	LT & RT	32.0	337.8	1 7/8	35.5
1031+05.00	1031+78.00	LT & RT	32.0	259.6	1 1/2	21.8
SUBTOTAL (WYE)						1012.7
USE						1013
FAP 538 (IL 94)						
987+20.00	987+35.00	LT & RT	26.0	43.3	1 1/2	3.6
987+35.00	987+50.00	LT & RT	26.0	43.3	1 7/8	4.6
987+50.00	1019+06.00	LT & RT	26.0	9117.3	1 1/2	765.9
1019+06.00	1019+56.00	LT & RT	29.0	161.1	1 1/2	13.5
1019+56.00	1022+10.00	LT & RT	32.0	903.1	1 1/2	75.9
1022+10.00	1022+60.00	LT & RT	29.0	161.1	1 1/2	13.5
1022+60.00	1100+52.15	LT & RT	26.0	22510.7	1 1/2	1890.9
1100+52.15	1101+27.15	LT & RT	29.0	241.7	1 1/2	20.3
1101+27.15	1102+75.47	LT & RT	32.0	527.4	1 1/2	44.3
1102+75.47	1102+90.47	LT & RT	32.0	53.3	1 7/8	5.6
1102+90.47	1103+05.47	LT & RT	32.0	53.3	1 1/2	4.5
1104+08.20	1104+23.20	LT & RT	32.0	53.3	1 1/2	4.5
1104+23.20	1104+38.20	LT & RT	32.0	53.3	1 7/8	5.6
1104+38.20	1105+73.84	LT & RT	32.0	482.3	1 1/2	40.5
1105+73.84	1106+61.34	LT & RT	29.0	281.9	1 1/2	23.7
1106+61.34	1119+00.00	LT & RT	26.0	3578.4	1 1/2	300.6
1119+00.00	1124+00.00	LT & RT	32.0	1777.8	1 1/2	149.3
1124+00.00	1145+40.11	LT & RT	26.0	6182.5	1 1/2	519.3
1145+40.11	1146+34.51	LT & RT	29.0	304.2	1 1/2	25.6
1146+34.51	1147+57.26	LT & RT	32.0	436.4	1 1/2	36.7
1147+57.26	1147+72.26	LT & RT	32.0	53.3	1 7/8	5.6
1147+72.26	1147+87.26	LT & RT	32.0	53.3	1 1/2	4.5
1149+21.21	1149+36.21	LT & RT	32.0	53.3	1 1/2	4.5
1149+36.21	1149+51.21	LT & RT	32.0	53.3	1 7/8	5.6
1149+51.21	1150+48.75	LT & RT	32.0	346.8	1 1/2	29.1
1150+48.75	1151+18.39	LT & RT	29.0	224.4	1 1/2	18.8
1151+18.39	1175+15.50	LT & RT	26.0	6925.0	1 1/2	581.7
1175+15.50	1176+56.00	LT & RT	29.0	452.7	1 1/2	38.0
1176+56.00	1176+62.00	LT & RT	32.0	21.3	1 1/2	1.8
1176+62.00	1176+85.00	LT & RT	32.0	81.8	1 1/2	6.9
CLAREMONT DR		LT	VARIES	170.7	1 1/2	14.3
SUBTOTAL (PPP)						4659.1
USE						4660
TOTAL						5673

HOT-MIX ASPHALT SURFACE REMOVAL

STATION TO STATION		SIDE	WIDTH	44000158 2 1/4"	X4401198 VARIABLE
				SQ YD	
FAP 538 (IL 94) - 0005 FUNDING					
987+35.0	1014+70.0	LT & RT	26.0		7901.1
1014+70.0	1019+86.0	LT & RT	26.0	1490.7	
1019+86.0	1023+20.0	LT & RT	26.0		964.9
1023+20.0	1030+30.0	LT & RT	26.0	2051.1	
1030+30.0	1081+20.0	LT & RT	26.0		14704.4
1081+20.0	1088+05.0	LT & RT	26.0	1978.9	
1088+05.0	1102+90.5	LT & RT	26.0		4291.4
1104+23.2	1110+95.0	LT & RT	26.0		1940.8
1110+95.0	1114+80.0	LT & RT	26.0	1112.2	
1114+80.0	1135+20.0	LT & RT	26.0		5893.3
1135+20.0	1142+30.0	LT & RT	26.0	2051.1	
1142+30.0	1147+72.3	LT & RT	26.0		1566.5
1149+36.2	1152+10.0	LT & RT	26.0		790.9
1152+10.0	1158+30.0	LT & RT	26.0	1791.1	
1158+30.0	1176+62.0	LT & RT	26.0		5292.4
FAP 685 (IL 9) - 0001 FUNDING					
1013+80.8	1014+22.6	LT & RT	26.0		120.6
TOTAL				10475.1	43467
USE				10476	43467

DRIVEWAY PAVEMENT REMOVAL

STATION	SIDE	TYPE	44000200 SQ YD
FAP 538 (IL 94) - 0001 FUNDING			
1174+12.0	LT	HMA	98.0
1175+45.5	RT	HMA	34.6
1176+82.0	LT	HMA	36.3
FAP 685 (IL 9) - 0001 FUNDING			
1023+90.5	RT	HMA	41.9
1025+11.2	RT	CONC	117.6
1026+84.7	RT	CONC	101.9
1026+92.8	LT	HMA	21.1
1027+99.0	RT	CONC	97.0
1028+80.7	RT	CONC	78.0
1029+57.8	RT	CONC	71.7
TOTAL			698.0
USE			698

GUTTER REMOVAL

STATION TO STATION		SIDE	44000400 FOOT
FAP 538 (IL 94) - 0005 FUNDING			
1018+70.0	1019+60.0	RT	90.0
1019+20.0	1019+60.0	LT	40.0
FAP 685 (IL 9) - 0001 FUNDING			
1014+98.1	1017+41.0	LT	242.9
1014+99.9	1019+52.6	RT	452.7
TOTAL			825.6
USE			826

COMBINATION CURB AND GUTTER REMOVAL

STATION TO STATION		SIDE	44000500 FOOT
CURVE B - 0001 FUNDING			
103+80	104+20	LT	40
TOTAL			40

ENTRANCE SCHEDULE

STATION	SIDE	TYPE	WIDTH	AREA (SQ FT)	35101400 AGGREGATE BASE COURSE TYPE B	40200800 AGGREGATE SURFACE COURSE TYPE B	AREA (SQ FT)	40800050 INCIDENTAL HMA SURFACING	48203023 HMA SHLDS 6 1/2"	40600982 HMA SURFACE REMOVAL BUTT-JOINT	42300400 PCC DRIVEWAY PAVEMENT 8 INCH	42001300 PROTECTIVE COAT
					TON				SQ YD			
FAP 538 (IL 94) - 0005 FUNDING												
987+76.9	LT	TR 3000N	49.5				710.2	6.6	16.2	62.7		
987+76.9	RT	TR 3000N	36.0				576.9	5.4	22.2	39.4		
1013+25.8	RT	PE	17.6	172.4		3.8	317.0	6.9		16.3		
1013+50.8	LT	PE	16.7	165.9		3.7	309.6	6.7		20.5		
1023+02.6	RT	FE	•									
1023+18.8	LT	FE	•									
1040+72.3	LT	TR 2900N	29.3				505.9	4.7	27.4	28.3		
1040+72.3	RT	TR 2900N	34.0				553.1	5.2	23.0	36.2		
1048+49.9	LT	FE	•									
1052+65.0	RT	FE	•									
1054+28.7	LT	FE	•									
1063+97.4	RT	FE	•									
1066+18.4	LT	PE	36.4				354.7	7.7		34.9		
1067+18.5	RT	FE	•									
1077+07.9	LT	PE	20.4	191.5		4.2	338.8	7.4		27.6		
1091+56.6	LT	FE	•									
1094+43.8	RT	TR 2800N	35.4				566.8	5.3	17.9	41.8		
1107+41.9	LT	TR 2780N	40.5				618.2	5.8	14.8	52.3		
1111+30.0	RT	FE	•									
1121+22.3	RT	PE	14.6	150.8		3.3	386.0	8.4		22.2		
1126+13.6	LT	FE	•									
1128+07.8	RT	FE	•									
1135+29.3	RT	FE	•									
1158+11.1	LT	PE	25.8	229.2		5.1	343.1	7.5		14.5		
1158+44.6	LT	PE	29.7	256.4		5.7	374.3	8.2		28.2		
1161+19.3	RT	PE	16.8	166.1		3.7	309.9	6.7				
1162+80.9	LT	PE	36.0				351.4	7.7		23.8		
1163+33.5	LT	PE	37.6				364.0	7.9		25.5		
1165+91.6	LT	PE	40.3	331.0		7.3	498.2	10.8				
1167+42.9	LT	PE	22.4	205.4		4.5	354.8	7.7		13.6		
1169+18.1	LT	PE	13.3	136.2		3.0	287.3	6.3		19.2		
1171+38.7	LT	WILLOW DR	22.9				442.3	4.1	19.1	28.8		
1171+47.8	RT	PE	29.0				295.3	6.4		23.7		
1172+00.0	LT	PE	24.6				260.2	5.7		14.2		
1174+24.5	LT	CLARMONT	27.6				488.6			42.7		
FAP 538 (IL 94) - 0001 FUNDING												
1175+45.5	RT	PE	30.0	804.0	30.5		245.0	5.3				
1176+82.0	LT	PE	22.7	886.9	33.7		210.9	4.6				
FAP 685 (IL 9) - 0001 FUNDING												
1013+25.0	LT	CE	VAR	286.5	10.9							
1013+97.5	LT	FE	12.0	517.0	19.6		253.0	5.5				
1014+30.0	RT	FE	12.0	397.0	15.1		253.0	5.5				
1018+84.0	LT	FE	16.0	1222.7	46.4		315.8	6.9				
1023+90.5	RT	CE	12.0				397.0	19.8				
1025+11.2	RT	CE	35.0								102.9	102.9
1026+84.7	RT	CE	30.0								90.1	90.1
1026+92.8	LT	PE	12.0	370.1	14.1		370.1	8.1				
1027+99.0	RT	CE	26.0								79.9	79.9
1028+80.7	RT	CE	24.0								74.6	74.6
1028+83.5	LT	PE	16.0	489.0	18.6		297.0	6.5				
1029+42.2	LT	PE	12.0	397.0	15.1		253.0	5.5				
1029+57.8	RT	CE	20.0								64.6	64.6
1030+28.3	LT	PE	12.0	397.0	15.1		253.0	5.5				
1031+30.0	LT	PE	12.0	385.1	14.6		253.0	5.5				
TOTALS					233.6	44.4		227.8	140.6	616.4	412.1	412.1
USE					234	45		229	141	617	413	413

• - WIDTH IS 3' OF AGGREGATE WEDGE SHOULDER PER 3P ENTRANCE DETAILS.

PAVEMENT REMOVAL

44000100

STATION TO STATION		SIDE	WIDTH	SQ YD
CURVE A				
102+40.0	109+50.	LT & RT	VARIES	1436.8
CURVE B				
102+30.0	109+15.	LT & RT	VARIES	1432.8
SUBTOTAL (WYE)				2869.6
USE				2870
CLAREMONT DR				
10+13.0	10+50.0	CL	VARIES	78.5
SUBTOTAL (PPP)				78.5
USE				79
USE				2949

PAVED SHOULDER REMOVAL

44004250

STATION TO STATION		SIDE	SQ YD
FAP 538 (IL 94) - 0005 FUNDING			
1019+60.0	1022+10.0	RT	41.7
1019+60.0	1022+60.0	LT	50.0
1100+52.2	1103+05.3	RT	42.2
1101+27.2	1103+05.3	LT	29.7
1104+08.2	1105+73.8	RT	27.6
1104+08.2	1106+61.3	LT	42.2
1145+40.1	1148+06.5	RT	44.4
1146+34.5	1148+12.6	LT	29.7
1148+95.8	1150+48.8	RT	25.5
1149+02.0	1151+18.4	LT	36.1
FAP 538 (IL 94) - 0001 FUNDING			
1175+15.5	1177+40.0	RT	37.4
1176+56.0	1177+40.0	LT	14.0
TOTAL			420.4
USE			421

HOT-MIX ASPHALT SHOULDERS, 6 1/2"

48203023

STATION TO STATION		SIDE	WIDTH	SQ YD
FAP 538 (IL 94) - 0005 FUNDING				
1019+06.0	1022+10.0	RT	4.0	135.1
1019+56.0	1022+60.0	LT	4.0	135.1
1100+52.2	1103+05.3	RT	4.0	112.5
1101+27.2	1103+05.3	LT	4.0	79.2
1104+08.2	1105+73.8	RT	4.0	73.6
1104+08.2	1106+61.3	LT	4.0	112.5
1145+40.1	1148+05.5	RT	4.0	118.0
1146+34.5	1147+87.3	LT	4.0	67.9
1149+21.2	1150+48.8	RT	4.0	56.7
1149+02.0	1151+18.4	LT	4.0	96.2
TOTAL				986.8
USE				987

SEE ENTRANCE SCHEDULE FOR ADDITIONAL QUANTITY

MISCELLANEOUS PAVING ITEMS SCHEDULE

ITEM	UNIT	TOTAL
TEMPORARY RAMP	SQ YD	300
BITUMINOUS MATERIALS (PRIME COAT)	POUND	47897
AGGREGATE FOR TEMPORARY ACCESS	TON	50

THE SCHEDULE FOR MISCELLANEOUS PAVING ITEMS ARE ESTIMATED QUANTITES. IT MAY BE REDUCED, INCREASED, OR DELETED BY THE ENGINEER BASED ON ACTUAL FIELD CONDITIONS. NO WORK INVOLVING THESE ESTIMATED QUANTITIES SHALL BE PERFORMED WITHOUT THE DIRECTION AND APPROVAL OF THE ENGINEER.

HOT MIX ASPHALT SHOULDER WIDENING

BEGIN STATION	TO	END STATION	SIDE	LENGTH	WIDTH	AREA	48203029 HMA SHOULDERS 8"	64200108 SHOULDER RUMBLE STRIPS, 8 INCH	20200600 EXC & GR EX SHOULDER
FAP 685 (IL 9)				FOOT	FOOT	SQ FT	SQ YD	FOOT	UNIT
1083+00.00		1171+25.00	LT/RT	8825	3	52950	5883.3	17650.0	176.5
1171+25.00		1173+82.00	LT	257	OMISSION				
1171+25.00		1173+82.00	RT	257	3	771	85.7	257.0	2.5
1173+82.00		1175+65.00	LT/RT	183	3	1098	122.0	366.0	3.6
1175+65.00		1186+35.00	RT	1070	OMISSION				
1175+65.00		1179+00.00	LT	335	3	1005	111.7	335.0	3.3
1179+00.00		1185+70.00	LT	670	OMISSION				
1185+70.00		1193+20.00	LT	750	3	2250	250.0	750.0	7.5
1193+20.00		1194+39.00	LT	119	OMISSION				
1186+35.00		1190+00.00	RT	365	3	1095	121.7	365.0	3.6
1190+00.00		1200+94.00	RT	1094	OMISSION				
1200+94.00		1207+20.00	RT	626	3	1878	208.7	626.0	6.2
1207+20.00		1209+27.00	RT	207	OMISSION				
1194+39.00		1207+10.00	LT	1271	3	3813	423.7	1271.0	12.7
1207+10.00		1209+17.00	LT	207	OMISSION				
1209+17.00		1216+20.00	LT	703	3	2109	234.3	703.0	7.0
1216+20.00		1223+30.00	LT	710	OMISSION				
1209+27.00		1215+20.00	RT	593	3	1779	197.7	593.0	5.9
1215+20.00		1238+42.00	RT	2322	OMISSION				
1223+30.00		1232+05.00	LT	875	3	2625	291.7	875.0	8.7
1232+05.00		1238+42.00	LT	637	OMISSION				
1238+42.00		1262+55.89	LT/RT	2414	3	14483	1609.3	4827.8	48.3
1262+55.89		1263+31.52			STATION EQUATION				
1263+31.52		1269+77.10	LT/RT	646	3	3873	430.4	1291.2	12.9
TOTALS (SAFETY)				25135		89730	9970	29910	299

AGGREGATE WEDGE SHOULDER, TYPE B

48102100

STATION TO STATION		SIDE	WIDTH	DEPTH	TON
FAP 538 (IL 94)					
987+20.00	987+46.14	RT	3.0	2 1/4	1.1
988+07.90	1013+04.93	RT	3.0	2 1/4	106.6
1013+46.55	1015+00.00	RT	3.0	2 1/4	6.6
1022+34.00	1023+50.00	RT	3.0	2 1/4	5.0
1030+00.00	1040+41.59	RT	3.0	2 1/4	44.5
1041+00.91	1081+50.00	RT	3.0	2 1/4	172.9
1087+75.00	1094+14.93	RT	3.0	2 1/4	27.3
1094+75.61	1100+22.15	RT	3.0	2 1/4	23.3
1106+03.84	1111+35.52	RT	3.0	2 1/4	22.7
1114+50.00	1119+00.00	RT	3.0	2 1/4	19.2
1119+00.00	1121+08.13	RT	3.0	3 1/2	13.8
1121+37.93	1124+00.00	RT	3.0	3 1/2	17.4
1124+00.00	1135+50.00	RT	3.0	2 1/4	49.1
1142+00.00	1145+10.11	RT	3.0	2 1/4	13.2
1150+78.75	1154+00.00	RT	3.0	2 1/4	13.7
1157+25.00	1160+99.48	RT	3.0	2 1/4	16.0
1161+40.21	1171+24.72	RT	3.0	2 1/4	42.0
1171+63.63	1175+15.50	RT	3.0	2 1/4	15.0
1175+69.50	1176+50.00	RT	3.0	3 1/2	5.3
987+20.00	987+41.74	LT	3.0	2 1/4	0.9
988+17.28	1013+29.65	LT	3.0	2 1/4	107.3
1013+70.34	1015+00.00	LT	3.0	2 1/4	5.5
1022+84.00	1023+50.00	LT	3.0	2 1/4	2.8
1030+00.00	1040+46.17	LT	3.0	2 1/4	44.7
1041+00.77	1065+94.75	LT	3.0	2 1/4	106.5
1066+41.08	1076+82.66	LT	3.0	2 1/4	44.5
1077+30.35	1081+50.00	LT	3.0	2 1/4	17.9
1087+75.00	1100+97.15	LT	3.0	2 1/4	56.5
1106+91.34	1107+09.43	LT	3.0	2 1/4	0.8
1107+75.25	1111+25.00	LT	3.0	2 1/4	14.9
1114+50.00	1119+00.00	LT	3.0	2 1/4	19.2
1119+00.00	1124+00.00	LT	3.0	3 1/2	33.2
1124+00.00	1135+50.00	LT	3.0	2 1/4	49.1
1142+00.00	1146+04.51	LT	3.0	2 1/4	17.3
1151+48.39	1152+40.00	LT	3.0	2 1/4	3.9
1158+81.83	1162+58.78	LT	3.0	2 1/4	16.1
1163+56.14	1165+64.55	LT	3.0	2 1/4	8.9
1166+28.82	1167+20.30	LT	3.0	2 1/4	3.9
1167+66.64	1168+96.76	LT	3.0	2 1/4	5.6
1169+33.99	1171+15.67	LT	3.0	2 1/4	7.8
1171+63.91	1171+82.64	LT	3.0	2 1/4	0.8
1172+17.17	1174+10.00	LT	3.0	3 1/2	12.8
1174+45.00	1176+61.20	LT	3.0	3 1/2	14.4
SUBTOTAL (PPP)					1210.3
USE					1211

48102100

STATION TO STATION		SIDE	WIDTH	DEPTH	TON
FAP 538 (IL 94)					
1179+07.00	1182+23.56	RT	3.0	3 1/2	21.0
1178+71.00	1180+97.90	LT	3.0	3 1/2	15.1
FAP 685 (IL 9)					
1012+27.31	1013+45.00	LT	3 & VARIE	2 1/4	9.0
1012+27.31	1013+65.00	RT	3.0	2 1/4	5.9
1013+56.48	1013+83.50	LT	3.0	2 1/4	1.2
1014+11.50	1014+88.54	LT	3.0	2 1/4	3.3
1019+00.00	1020+31.67	LT	3.0	2 1/4	5.6
1025+45.11	1026+78.80	LT	3.0	2 1/4	5.7
1027+06.80	1028+67.53	LT	3.0	2 1/4	6.9
1028+99.54	1029+28.20	LT	3.0	2 1/4	1.2
1029+56.20	1030+14.30	LT	3.0	2 1/4	2.5
1030+42.30	1031+16.00	LT	3.0	2 1/4	3.1
1031+44.00	1031+78.00	LT	3.0	2 1/4	1.5
1012+27.31	1013+65.30	RT	3.0	2 1/4	5.9
1013+76.63	1014+16.00	RT	3.0	2 1/4	1.7
1014+44.00	1014+87.65	RT	3.0	2 1/4	1.9
1019+62.00	1023+76.50	RT	3.0	2 1/4	17.7
1024+04.50	1024+85.70	RT	3.0	2 1/4	3.5
1025+36.70	1026+61.70	RT	3.0	2 1/4	5.3
1027+07.70	1027+77.99	RT	3.0	2 1/4	3.0
1028+19.98	1028+60.67	RT	3.0	2 1/4	1.7
1029+00.66	1029+39.75	RT	3.0	2 1/4	1.7
1029+75.74	1031+78.00	RT	3.0	2 1/4	8.6
SUBTOTAL (WYE)					132.9
USE					133

STATION TO STATION		SIDE	WIDTH	DEPTH	TON
FAP 685 (IL 9)					
1083+00.00	1118+86.00	LT/RT	3.0	2 1/2	340.3
1118+86.00	1120+86.00	LT/RT	3.0	3 1/2	26.6
1120+86.00	1137+64.00	LT/RT	3.0	2 1/2	159.3
1137+64.00	1139+64.00	LT/RT	3.0	3 1/2	26.6
1139+64.00	1171+25.00	LT/RT	3.0	2 1/2	300.0
1171+25.00	1173+82.00	LT/RT	3.0	3 1/2	34.1
1173+82.00	1175+65.00	LT/RT	3.0	2 1/2	17.4
1175+65.00	1179+00.00	LT	3.0	2 1/2	15.9
1185+70.00	1188+53.00	LT	3.0	2 1/2	13.4
1188+53.00	1190+54.00	LT	3.0	3 1/2	13.4
1190+54.00	1193+20.00	LT	3.0	2 1/2	12.6
1186+35.00	1188+53.00	RT	3.0	2 1/2	10.3
1188+53.00	1190+00.00	RT	3.0	3 1/2	9.8
1200+94.00	1207+20.00	RT	3.0	2 1/2	29.7
1194+39.00	1207+10.00	LT	3.0	2 1/2	60.3
1209+17.00	1216+20.00	LT	3.0	2 1/2	33.4
1209+27.00	1215+20.00	RT	3.0	2 1/2	28.1
1223+30.00	1232+05.00	LT	3.0	2 1/2	41.5
1238+42.00	1262+55.89	LT/RT	3.0	2 1/2	229.1
1263+31.52	1269+77.10	LT/RT	3.0	2 1/2	61.3
SUBTOTAL (SAFETY)					1463.1
USE					1464
TOTAL					2808

PAVEMENT PATCHING, 14 INCH SCHEDULE

44200168

STATION	SIDE	LENGTH	WIDTH	TYPE IV 14 INCH
				SQ YD
FAP 685 (IL 9) - 0001 FUNDING				
1023+50	RT	13.0	8.7	12.5
1023+50	LT	13.0	8.7	12.5
CURVE A - 0001 FUNDING				
104+35	RT	14.8	5.5	8.9
104+35	LT	14.2	5.5	8.5
TOTAL				42.5
USE				43

PAVEMENT PATCHING, 17 INCH SCHEDULE

STATION	44200202 TYPE II 17 INCH	44200204 TYPE III 17 INCH	44200206 TYPE IV 17 INCH
	SQ YD		
IDOT PATCHING SURVEY	200	275	70
TOTALS	200	275	70

BOX CULVERT END SECTIONS, CULVERT NO. 1

54001001

NO.	STATION	SIDE	EACH
FAP 538 (IL 94)			
41	1178+31.5	RT	1
42	1178+31.5	LT	1
TOTAL (WYE)			2

REMOVAL OF EXISTING STRUCTURES NO. 2

50100400

NO.	STATION	SIDE	EACH
FAP 538 (IL 94)			
41	1177+71.5	RT	1
TOTAL (WYE)			1

REMOVAL OF EXISTING STRUCTURES NO. 3

50100500

NO.	STATION	SIDE	EACH
FAP 538 (IL 94)			
42	1178+31.5	LT	1
TOTAL (WYE)			1

PRECAST CONCRETE BOX CULVERTS 4' X 4'

54010404

NO.	STATION	SIDE	FOOT
FAP 538 (IL 94)			
41	1177+71.5	RT	59
42	1178+31.5	LT	42
TOTAL (WYE)			101

PRECAST REINFORCED CONCRETE FLARED END SECTIONS 15"

54213660

NO.	STATION	SIDE	EACH
FAP 538 (IL 94)			
33	1173+89.3	LT	1
TOTAL (PPP)			1

PRECAST REINFORCED CONCRETE FLARED END SECTIONS 30"

54213675

NO.	STATION	SIDE	EACH
FAP 538 (IL 94)			
36	1174+56.5	LT	1
38	1174+51.1	RT	1
SUBTOTAL (PPP)			2
FAP 685 (IL 9)			
45	1138+64.0	LT	1
46	1138+64.0	RT	1
47	1172+34.0	RT	1
SUBTOTAL (SAFETY)			3
TOTAL			5

PRECAST REINFORCED CONCRETE FLARED END SECTIONS 42"

54213687

NO.	STATION	SIDE	EACH
FAP 538 (IL 94)			
50	1119+88.3	RT	1
53	1122+98.0	LT	1
TOTAL (PPP)			2

PIPE CULVERTS, CLASS A, TYPE 1 24"

542A0229

NO.	STATION	SIDE	FOOT
FAP 685 (IL 9)			
43	1119+86.0	LT	2.5
44	1119+86.0	RT	2.5
TOTAL (SAFETY)			5

PIPE CULVERTS, CLASS A, TYPE 1 30"

542A0235

NO.	STATION	SIDE	FOOT
FAP 685 (IL 9)			
45	1138+64.0	LT	3
46	1138+64.0	RT	3.5
TOTAL (SAFETY)			6.5
		USE	7

PIPE CULVERTS, CLASS A, TYPE 2 15"

542A1060

NO.	STATION	SIDE	FOOT
FAP 538 (IL 94)			
33	1173+89.3	LT	60.7
TOTAL (PPP)			61

PIPE CULVERTS, CLASS A, TYPE 2 30"

542A1075

NO.	STATION	SIDE	FOOT
FAP 685 (IL 9)			
47	1172+34.0	RT	6.8
TOTAL (SAFETY)			6.8
		USE	7

PIPE CULVERTS, CLASS A, TYPE 2 42"

542A1087

NO.	STATION	SIDE	FOOT
FAP 538 (IL 94)			
29	1120+50.0	RT	12.5
50	1120+48.4	RT	69
TOTAL (PPP)			81.5
		USE	82

PIPE CULVERTS, CLASS A, TYPE 3 30"

542A1915

NO.	STATION	SIDE	FOOT
FAP 538 (IL 94)			
34	1174+52.5	LT	3.5
36	1174+56.5	LT	4
37	1174+52.5	RT	3.5
38	1174+51.1	RT	20
TOTAL (PPP)			31

PIPE CULVERTS, CLASS A, TYPE 3 42"

542A1927

NO.	STATION	SIDE	FOOT
FAP 538 (IL 94)			
29	1119+97.5	LT	22.5
TOTAL (PPP)			22.5
		USE	23

PIPE CULVERTS, CLASS D, TYPE 2 8"

542D1053

NO.	STATION	SIDE	FOOT
FAP 538 (IL 94)			
40	1174+52.9	RT	30
TOTAL (PPP)			30

PIPE CULVERTS, CLASS A 42" (JACKED)

542JA042

NO.	STATION	SIDE	FOOT
FAP 538 (IL 94)			
29	1120+50.0	LT/RT	76
TOTAL (PPP)			76

PIPE CULVERTS, CLASS A, TYPE 1 42"

542A0247

NO.	STATION	SIDE	FOOT
FAP 538 IL 94)			
31	1122+67.1	LT	215
53	1122+98.0	LT	32.5
TOTAL (PPP)			247.5
		USE	248

CONCRETE COLLAR SCHEDULE

SEE DETAIL

INLETS / MANHOLES SCHEDULE

STRUCTURE NUMBER	STATION	SIDE	60236200 INLETS TYPE A TYPE 8 GRATE	60240301 INLETS TYPE B TYPE 8 GRATE	60219000 MANHOLES 4' DIA TYPE 8 GRATE	60221700 MANHOLES 5' DIA TYPE 8 GRATE	60223800 MANHOLES 6' DIA TYPE 1 CL LID	60224432 MANHOLES 7' DIA MED INLET (604106)	60224446 MANHOLES 7' DIA TYPE 1 CL LID	60224448 MANHOLES 7' DIA TYPE 8 GRATE	60224459 MANHOLES 8' DIA TYPE 1 CL LID
			EACH								
FAP 685 (IL 9) - 0001 FUNDING											
3	1013+62.0	LT								1	
6	1013+92.0	RT									1
11	1023+50.0	RT						1			
13	1024+50.0	RT				1					
15	1026+50.0	RT				1					
18	1027+50.0	RT			1						
20	1028+50.0	RT			1						
23	1029+20.0	RT		1							
26	1029+85.0	RT	1								
FAP 538 (IL94) (PPP)											
30	1120+50.0	LT						1			
35	1174+52.5	LT					1				
39	1174+52.6	RT					1				
51	1120+50.0	RT					1		1		
52	1122+69.0	LT					1	1			
TOTALS			1	1	2	2	2	3	1	1	1

STORM SEWER SCHEDULE

STRUCTURE NUMBER	STATION	SIDE	550A0340 STORM SEWERS TYPE 2 12"	550A0360 STORM SEWERS TYPE 2 15"	550A0380 STORM SEWERS TYPE 2 18"	550A0410 STORM SEWERS TYPE 2 24"	550A0450 STORM SEWERS TYPE 2 36"	54213681 PRECAST REINFORCED CONCRETE FLARED END SECTIONS 36"	20800150 TRENCH BACKFILL
			FOOT					EACH	CU YD
FAP 685 (IL 9) - 0001 FUNDING									
10	1023+50.0	LT & RT					74	1	38.6
12	1024+00.0	RT				98			18.2
14	1025+50.0	RT				198			30.1
17	1027+00.0	RT				98			12.6
19	1028+00.0	RT			98				9.0
22	1028+85.0	RT		68					6.6
25	1029+52.5	RT	64						4.1
TOTALS			64	68	98	394	74	1	119.2
USE			64	68	98	394	74	1	119

PIPE CULVERT CLASS D SCHEDULE

STRUCTURE NUMBER	STATION	SIDE	542D0220 PIPE CULVERTS CLASS D TYPE 1 15"	542D1063 PIPE CULVERTS CLASS D TYPE 2 18"	54215550 METAL END SECTIONS 15"	54215553 METAL END SECTIONS 18"
			FOOT		EACH	EACH
FAP 685 (IL 9) - 0001 FUNDING						
8	1013+97.5	LT		50		1
9	1014+30.0	RT		50		1
16	1026+92.8	LT	36		2	
21	1028+83.5	LT	40		2	
24	1029+42.2	LT	36		2	
27	1030+28.3	LT	36		2	
28	1031+30.0	LT	36		2	
32	1121+66.3	RT	115		1	
TOTALS			299	100	11	2

PIPE CULVERT REMOVAL (SPECIAL)

X5015225

STATION	SIDE	DESCRIPTION	FOOT
FAP 685 (IL 9) - 0001 FUNDING			
1013+62	LT	36" DIP	5
TOTAL			5

REMOVAL OF EXISTING STRUCTURES NO. 1

50100300

STATION	SIDE	DESCRIPTION	EACH
CURVE B - 0001 FUNDING			
106+00	LT & RT	2'x2' RCBC W/ DROP INLET	1
TOTAL			1

PIPE CULVERT REMOVAL

STATION	SIDE	DESCRITION	50105220 FOOT
FAP 538 (IL 94)			
1173+89	LT	15" CMP	34.5
SUBTOTAL (PPP)			34.5
USE			35
CURVE B			
106+00	RT	12" CLAY	50
FAP 538 (IL 94)			
1174+53	LT & RT	24" CMP	56
FAP 685 (IL 9)			
1013+34	LT	30" CMP	13
1013+86	LT	12" CMP	38
1014+17	RT	15" CLAY	17
1023+90	RT	15" CMP	36
1025+15	RT	15" CMP	66
1026+84	RT	15" CMP	61
1026+93	LT	15" CLAY	17
1027+99	RT	12" CMP	51
1028+81	RT	12" CMP	36
1028+83	LT	12" CMP	25
1029+42	LT	8" CMP	17
1029+59	RT	12" CMP	30
1030+27	LT	12" CMP	21
SUBTOTAL (WYE)			534
TOTAL			569

CONCRETE MEDIAN SCHEDULE

STATION TO STATION		SIDE	60608600 CONCRETE C&G TY M-6.06	60610400 CONCRETE C & G TY M-6.24	60618300 CONCRETE MED SURF 4 INCH	42001300 PROTECTIVE COAT
			FOOT		SQ FT	SQ YD
FAP 538 (IL 94) - 0001 FUNDING						
1182+34.5	1182+74.6	LT	39.4	73.2	553.8	88.4
1182+52.6	1182+77.8	RT	19.4	40.5	161.3	32.5
TOTALS			58.8	113.7	715.1	120.9
USE			59	114	716	121

GUARDRAIL SCHEDULE

STATION TO STATION		SIDE	63000001 SPBGR TYPE A 6' POSTS	63000003 SPBGR TYPE A 9' POSTS	63100085 TRAF BARRIER TERMINAL TYPE 6	63100167 TRAF BARRIER TERMINAL TYPE 1 SPECIAL (TANGENT)	78200410 GUARDRAIL MARKERS TYPE A	78201000 TERMINAL MARKERS DIRECT APPLIED
			FOOT	FOOT	EACH			
FAP 538 (IL 94) - 0005 FUNDING								
1019+12.5	1022+00.0	RT	187.5			2	4	2
1019+62.5	1022+50.0	LT	187.5			2	4	2
1101+37.2	1103+05.3	LT		75.0	1	1	3	1
1100+62.2	1103+05.3	RT		150.0	1	1	4	1
1104+08.2	1106+51.3	LT		150.0	1	1	4	1
1104+08.2	1105+63.8	RT		62.5	1	1	3	1
1146+44.5	1148+12.7	LT		75.0	1	1	3	1
1145+50.1	1148+05.8	RT		162.5	1	1	4	1
1149+02.7	1151+08.4	LT		112.5	1	1	3	1
1148+95.6	1150+38.8	RT		50.0	1	1	3	1
TOTALS			375.0	837.5	8	12	35	12

CONCRETE GUTTER SCHEDULE

STATION TO STATION		SIDE	60602500 CONCRETE GUTTER TYPE A	60600095 CLASS SI CONCRETE (OUTLET)	42001300 PROTECTIVE COAT
			FOOT	CU YD	SQ YD
FAP 538 (IL 94) - 0005 FUNDING					
1018+70.0	1019+06.0	RT		4.8	25.1
1019+20.0	1019+56.0	LT		4.8	25.1
FAP 685 (IL 9) - 0001 FUNDING					
1014+89.0	1019+62.0	RT	419.0	6.4	172.7
1014+89.0	1018+65.0	LT	322.0	6.4	140.3
TOTALS			741.0	22.4	363.2
USE			741	22.4	364

FURNISHING AND ERECTING RIGHT OF WAY MARKERS

STATION	SIDE	OFFSET	66600105 EACH
FAP 538 (IL 94)			
1119+00	RT	55.1	1
1119+70.0	LT	63.7	1
1120+20.0	LT	95	1
1120+50.0	RT	100	1
1121+05.0	RT	55.1	1
1123+50.0	LT	95	1
1124+00.0	LT	39.9	1
SUBTOTAL (PPP)			7
FAP 538 (IL 94)			
1177+00.0	RT	150	1
1177+50.0	RT	150	1
1179+00.0	RT	73.4	1
1180+05.7	LT	120	1
SUBTOTAL (WYE)			4
TOTAL			11

PERMANENT SURVEY MARKERS, TYPE I

STATION	DESCRIPTION	66700205 EACH
FAP 538 (IL 94) - 0005 FUNDING		
986+61.78	POT	1
989+40.29	PC	1
998+72.43	PT	1
1040+70.49	SE COR SEC 5	1
1071+07.64	PC	1
1081+07.63	PT	1
1094+44.44	NE COR SEC 17	1
1103+05.36	PI	1
1135+56.89	POT	1
1147+81.00	SE COR SEC 17	1
1148+54.00	POT	1
1160+79.00	POT	1
1175+46.98	POT	1
FAP 538 (IL 94) - 0001 FUNDING		
1183+02.98	POT	1
TOTAL		14

PLUG EXISTING CULVERTS

STATION	SIDE	SIZE	LENGTH	Z0041500 PLUG EXISTING CULVERTS	59300100 CONTROLLED LOW STRENGTH MATERIAL
			FEET	EACH	CU YD
FAP 538 (IL 94)					
1121+07.0	LT & RT	4x2 BOX	153.3	1	45.4
1120+87.4	RT	15"	49.2	1	2.2
SUBTOTAL (PPP)				2	47.7
USE				2	48.0
FAP 685 (IL 9)					
1026+56.0	LT & RT	2X2 BOX	44	1	6.5
SUBTOTAL (WYE)				1	6.5
TOTAL				3	54.5

GUARDRAIL REMOVAL

STATION TO STATION		SIDE	63200310 FOOT
FAP 538 (IL 94) - 0005 FUNDING			
1101+43	1103+05	LT	162
1100+60	1103+05	RT	245
1104+08	1106+53	LT	245
1104+08	1105+58	RT	150
1145+57	1148+06	RT	249
1146+43	1148+13	LT	170
1148+96	1150+41	RT	145
1149+02	1151+07	LT	205
TOTAL			1571

RAISED REFLECTIVE PAVEMENT MARKERS

STATION TO STATION		SIDE	MAXIMUM SPACING	78100100 1-WAY AMBER	1-WAY CRYSTAL	2-WAY AMBER
				EACH		
FAP 538 (IL 94) - 0005 FUNDING						
987+20.0	1177+39.98	CL	80	239		
FAP 538 (IL 94) - 0001 FUNDING						
1177+40.0	1180+58.9	CL	80	5		
1180+58.9	1182+59.8	CL	40	7		
1180+58.9	1182+79.8	RT	40			7
FAP 685 (IL 9) - 0001 FUNDING						
1013+66.4	1014+57.4	CL	40	6		
1014+57.4	1018+17.4	CL & LT	40		18	
1018+17.4	1019+92.4	LT	40		8	
1019+92.4	1021+37.4	LT	40	10		
1019+92.4	1021+37.4	CL	40			5
1022+29.4	1022+31.4	LT	N/A		3	
1022+31.4	1024+13.6	LT	40			6
1022+31.4	1024+13.6	CL & LT	40		10	
1024+13.6	1027+73.6	CL & LT	40		16	
1027+73.6	1028+53.6	CL	40	6		
1028+53.6	1031+78.0	CL	80	6		
TOTALS				279	55	18
USE				352		

PIPE CULVERT CLASS A SCHEDULE

STRUCTURE NUMBER	STATION	SIDE	542A1069 PIPE CULVERTS CLASS A TYPE 2 24"	542A1081 PIPE CULVERTS CLASS A TYPE 2 36"	5421A018 PIPE CULVERTS CLASS A TYPE 1 TEMP 18"	54213669 PRECAST REINFORCED CONCRETE FLARED END SECTIONS 24"	54213681 PRECAST REINFORCED CONCRETE FLARED END SECTIONS 36"	20800150 TRENCH BACKFILL
			FOOT			EACH		CU YD
FAP 685 (IL 9) - 0001 FUNDING								
1	1013+49.5	LT	28			1		2.5
2	1013+49.5	RT	10			1		3.5
4	1013+76.0	LT		8				13.7
5	1013+76.0	RT		10				9.5
7	1013+76.0	RT		6			1	7.9
43	1119+86.0	LT				1		
44	1119+86.0	RT				1		
48	1189+54.0	LT					1	
49	1189+54.0	RT		4			1	
CURVE A - 0001 FUNDING								
T1	104+35.0	LT & RT			70			5.5
TOTALS			38	28	70	4	3	42.6
USE			38	28	70	4	3	43

PRISMATIC CURB REFLECTOR

STATION TO STATION		SIDE	MAXIMUM SPACING	78200300 EACH
FAP 538 (IL 94) - 0001 FUNDING				
1182+34.5	1182+74.6	LT	10	12
1182+52.6	1182+77.8	RT	10	12
TOTAL				24

RAISED REFLECTIVE PAVEMENT MARKER REMOVAL

STATION TO STATION		SIDE	78300200 EACH
FAP 538 (IL 94) - 0005 FUNDING			
987+20.0	1177+40.0	CL	239
FAP 685 (IL 9) - 0001 FUNDING			
1012+27.3	1031+78.0	CL	25
TOTAL			264

NOTE: THIS IS AN ESTIMATED QUANTITY.

SIGNING SCHEDULE

EXISTING LOCATION		PROPOSED LOCATION (IF DIFFERENT)		DESCRIPTION	SIGN DESIGNATION	SIZE	72000100 SIGN PANEL TY 1	NUMBER OF POSTS	72800100 TELESCOPING STEEL SIGN SUPPORT	72400500 RELOCATE SIGN PANEL ASSEMBLY TY A	72400600 RELOCATE SIGN PANEL ASSEMBLY TY B	72400710 RELOCATE SIGN PANEL TY 1
STATION	O/S	STATION	O/S				SQ FT		FOOT	EACH	EACH	SQ FT
FAP 538 (IL 94)												
1178+10.0	RT	1179+60.0	RT	CITY AND ROUTE				2	28		1	
		1179+60.0	RT	AHEAD RT ARROW	M5-1(R)	21 x 15	2.2					
1180+00.0	RT	1177+60.0	RT	STOP AHEAD (SYMBOL)	W3-1a	30 X 30		1	14			6.25
1179+00.0	CL	1182+50.0	RT	STOP SIGN	R1-1	36 X 36		1	14			9
IL 9 1018+00	LT	1182+68.5	RT	STOP SIGN	R1-1	36 X 36		1	14			9
		1182+00.0	RT	IL 94	State	24 x 24	4	1	14			
		1182+00.0	RT	RIGHT ARROW	M6-1	21 x 15	2.2					
		1182+00.0	RT	IL 9	State	24 x 24	4	1	14			
		1182+00.0	RT	LT/RT ARROW	M-6-4	21 x 15	2.2					
FAP 685 (IL 9)												
1012+80.0	RT			AHEAD LT ARROW	M5-1(L)	21 x 15	2.2					
1016+15.0	RT			CITY AND ROUTE				2	28		1	
1018+60.0	LT	1018+60.0	RT	IL 94		24 x 24		1	14			4
		1018+60.0	RT	LEFT ARROW	M6-1	21 x 15	2.2					
1018+60.0	LT	1018+60.0	RT	IL 9 AND ARROW				1	14	1		
1019+17.0	RT			FOOTBALL/TRACK				2	28		1	
1019+69.0	LT			ADOPT HWY				2	28		1	
1020+82.0	LT			RR CROSSING		36 x 36		1	14			9
1021+57.0	RT			CITY AND 40 MPH				2	28		1	
		1021+60.0	RT	DOUBLE HORIZ. ARROW	M6-4	36 X 36	9.0	1	14			
1022+12.0	LT			55 MPH		24 x 24		1	14			4
		1025+00.0	LT	UP/RIGHT ARROW	M5-1(UL)	21 X 15	2.2	1	14			
		1025+00.0	LT	IL 94		24 x 24	4					
		1025+00.0	LT	IL 9 EAST				1	14	1		
1025+40.0	RT			40 MPH		24 x 24		1	14			4
1027+30.0	RT			IL 9 EAST				1	14	1		
1027+84.0	LT			CITY AND ROUTE				2	28		1	
		1027+84.0	LT	AHEAD RT ARROW	M5-1(R)	21 x 15	2.2					
1174+06.0	LT			STOP SIGN		36 X 36		1	14			9
1174+00.0	LT			STREET SIGN				1	14	1		9
1176+30.0	LT			40 MPH		24 X 24		1	14			4
						TOTAL (WYE)	36.3		406.0	4.0	6.0	67.3
						USE	37		406	4	6	68

MODIFIED URETHANE PAVEMENT MARKING - LINE 12"

STATION TO STATION		SIDE	DESCRIPTION	WHITE (78009012)	YELLOW
				FOOT	
FAP 538 (IL 94) - 0001 FUNDING					
1181+96.2	1182+77.5	LT	CHANNELIZATION	106.5	
1182+35.8	1182+79.8	RT	CHANNELIZATION	24.8	
FAP 685 (IL 9) - 0001 FUNDING					
1014+57.4	1019+92.4	LT CL	CHANNELIZATION		227.1
1022+29.4	1027+73.6	LT CL	CHANNELIZATION		295.4
TOTALS				131.3	522.4
USE				654	

MODIFIED URETHANE PAVEMENT MARKING - LINE 8"

STATION TO STATION		SIDE	DESCRIPTION	WHITE (78009008)
				FOOT
FAP 538 (IL 94) - 0001 FUNDING				
1181+96.2	1182+77.5	RT	CHANNELIZATION	199.5
1182+35.8	1182+79.8	RT	CHANNELIZATION	154.2
TOTAL				353.7
USE				354

SIGN REMOVAL SCHEDULE

EXISTING LOCATION		DESCRIPTION	SIZE	72400310 REMOVE SIGN PANEL TY 1
STATION	O/S			SQ FT
FAP 685 (IL 9)				
1012+80.0	RT	DIAGONAL ARROW	21 x 15	2.2
1023+00.0	LT	CROSS TRAFFIC	36 x 36	9
1025+00.0	LT	STOP SIGN	36 x 36	9
CURVE B				
103+10.0	RT	SPLIT ROAD	36 x 36	9.0
103+50.0	RT	WARNING SIGNS	12 x 36	3.0
103+75.0	RT	WARNING SIGNS	12 x 36	3.0
104+00.0	RT	WARNING SIGNS	12 x 36	3.0
104+50.0	RT	STOP AHEAD (SYMBOL)	30 x 30	6.25
107+00.0	RT	WARNING SIGNS	12 x 36	3.0
107+25.0	RT	WARNING SIGNS	12 x 36	3.0
107+50.0	RT	WARNING SIGNS	12 x 36	3.0
107+75.0	RT	WARNING SIGNS	12 x 36	3.0
CURVE A				
103+50.0	LT	WARNING SIGNS	12 x 36	3.0
103+75.0	LT	WARNING SIGNS	12 x 36	3.0
104+00.0	LT	WARNING SIGNS	12 x 36	3.0
104+25.0	LT	WARNING SIGNS	12 x 36	3.0
104+50.0	LT	WARNING SIGNS	12 x 36	3.0
107+20.0	RT	RR CROSSING	36 x 36	9
107+00.0	LT	STOP AHEAD (SYMBOL)	30 x 30	6.25
			SUBTOTAL (WYE)	86.7
			USE	87

REMOVED SIGNS SHALL BE TAKEN TO IDOT OPERATIONS IN SPRINGFIELD. CALL 217-785-0288 FOR INFORMATION.

PAVEMENT MARKING REMOVAL

STATION TO STATION		SIDE	DESCRIPTION	78300100 SQ FT
CURVE A - 0001 FUNDING				
102+65.0	103+60.0	LT	EDGE LINE	63.3
102+85.0	103+15.0	CL	NO-PASSING	30.0
CURVE B - 0001 FUNDING				
101+75.0	103+00.0	CL	NO-PASSING	125.0
102+65.0	103+25.0	RT	EDGE LINE	40.0
TOTAL				258.3
USE				259

PAINT PAVEMENT MARKING - LINE 5"

STATION TO STATION		SIDE	DESCRIPTION	WHITE	YELLOW	
FAP 538 (IL 94)						
1177+00.00	1182+92.20	RT	EDGE LINE	592.2		•
1177+00.00	1182+85.99	LT	EDGE LINE	586.0		•
1177+00.00	1182+70.00	CL	NO-PASSING		1140.0	•
FAP 685 (IL 9)						
1012+27.00	1015+00.00	CL	NO-PASSING		546	
1012+27.00	1015+00.00	RT/LT	EDGE LINE	546.0		
1015+00.00	1021+40.00	LT	EDGE LINE	640.0		•
1022+20.00	1028+00.00	RT	EDGE LINE	580.0		•
SUBTOTAL (WYE)				2944.2	1686.0	
USE				4631		
FAP 538 (IL 94)						
987+20.00	1178+18.89	LT	EDGE LINE	19098.9		
987+20.00	1178+18.89	RT	EDGE LINE	19098.9		
987+20.00	1022+40.00	CL	SKIP-DASH		880.0	
1022+40.00	1030+80.00	LT CL	SKIP-DASH		210.0	
1022+40.00	1030+80.00	RT CL	NO-PASSING		840.0	
1030+80.00	1033+40.00	CL	SKIP-DASH		70.0	
1033+40.00	1042+10.00	LT CL	NO-PASSING		870.0	
1033+40.00	1042+10.00	RT CL	SKIP-DASH		220.0	
1042+10.00	1070+10.00	CL	SKIP-DASH		700.0	
1070+10.00	1078+80.00	LT CL	SKIP-DASH		220.0	
1070+10.00	1080+20.00	RT CL	NO-PASSING		1010.0	
1078+80.00	1095+40.00	LT CL	NO-PASSING		1660.0	
1080+20.00	1095+40.00	RT CL	SKIP-DASH		380.0	
1095+40.00	1102+00.00	CL	SKIP-DASH		170.0	
1102+00.00	1114+50.00	LT CL	SKIP-DASH		320.0	
1102+00.00	1114+50.00	RT CL	NO-PASSING		1250.0	
1114+50.00	1124+30.00	LT CL	NO-PASSING		980.0	
1114+50.00	1124+30.00	RT CL	SKIP-DASH		250.0	
1124+30.00	1125+60.00	CL	SKIP-DASH		40.0	
1125+60.00	1134+90.00	LT CL	SKIP-DASH		240.0	
1125+60.00	1137+90.00	RT CL	NO-PASSING		1230.0	
1134+90.00	1145+50.00	LT CL	NO-PASSING		1060.0	
1137+90.00	1145+50.00	RT CL	SKIP-DASH		190.0	
1145+50.00	1158+60.00	LT CL	SKIP-DASH		330.0	
1145+50.00	1158+60.00	RT CL	NO-PASSING		1310.0	
1158+60.00	1168+50.00	LT CL	NO-PASSING		990.0	
1158+60.00	1168+50.00	RT CL	SKIP-DASH		250.0	
1168+50.00	1178+18.89	LT CL	NO-PASSING		968.9	
1168+50.00	1178+18.89	RT CL	NO-PASSING		968.9	
SUBTOTAL (PPP)				38197.8	17607.8	
USE				55806		
FAP 685 (IL 9)		LENGTH				
1083+00.00	1262+55.89	17955.89		35911.8	17955.9	
1262+55.89	1263+31.52	STATION EQUATION				
1263+31.52	1269+77.10	645.58		1291.2	645.6	
SUBTOTAL (SAFETY)				37202.9	18601.5	
USE				55805		
TOTAL				116242		

• ITEMS USED FOR STAGE 2 CONSTRUCTION

MODIFIED URETHANE PAVEMENT MARKING - LINE 5"

78009005

STATION TO STATION		SIDE	DESCRIPTION	WHITE	YELLOW
FAP 538 (IL 94)					
1178+18.89	1180+53.40	LT	EDGE LINE	234.5	
1178+18.89	1182+03.89	RT	EDGE LINE	385.0	
1178+18.89	1182+59.80	LT CL	NO-PASSING		440.9
1178+18.89	1182+59.80	RT CL	NO-PASSING		440.9
1180+53.40	1181+61.57	LT	EDGE LINE	109.1	
1182+03.89	1182+70.48	RT	EDGE LINE	88.1	
FAP 685 (IL 9)					
1012+27.30	1013+55.13	CR	NO-PASSING	127.8	
1012+27.30	1013+55.13	CL	NO-PASSING	127.8	
1012+27.30	1013+55.13	RT	EDGE LINE	127.8	
1012+27.30	1013+55.13	LT	EDGE LINE	127.8	
1013+60.12	1019+77.20	LT	EDGE LINE	617.1	
1013+66.37	1014+57.35	LT CL	NO-PASSING		91.0
1013+66.37	1014+57.35	RT CL	NO-PASSING		91.0
1013+72.61	1031+78.00	RT	EDGE LINE	1805.4	
1014+57.35	1021+37.35	LT CL	CHANNELIZATION		1360.0
1014+57.35	1018+17.35	RT CL	CHANNELIZATION		720.0
1018+17.35	1019+92.35	LT CL	CHANNELIZATION		350.0
1019+77.20	1020+94.50	LT	EDGE LINE	118.5	
1021+99.81	1023+18.61	LT	EDGE LINE	171.6	
1022+29.41	1027+73.61	LT CL	CHANNELIZATION		1088.4
1022+29.41	1027+73.61	CL	CHANNELIZATION		1088.4
1023+18.61	1031+78.00	LT	EDGE LINE	859.4	
1027+73.61	1031+78.00	LT CL	NO-PASSING		404.4
1027+73.61	1031+78.00	RT CL	NO-PASSING		404.4
TOTALS Y QUANTITY				4900.0	6479.4
USE				11380	

PAINT PAVEMENT MARKING - LINE 24"

78001180

STATION TO STATION		SIDE	DESCRIPTION	WHITE FOOT
FAP 538 (IL 94) - 0001 FUNDING				
1182+68.0	1182+70.0	RT	STOP BAR	12.0
TOTAL				12.0
USE				12

• - NOTE THIS SCHEDULE USED FOR STAGE CONSTRUCTION.

PREFORMED PLASTIC PAVEMENT MARKING TYPE B - INLAID - LETTERS AND SYMBOLS

78004200

STATION TO STATION		SIDE	DESCRIPTION	WHITE SQ FT
FAP 538 (IL 94) - 0001 FUNDING				
1180+58.9	1182+58.8	RT	LEFT TURN ARROWS	31.2
1180+58.9	1181+35.8	RT	RIGHT TURN ARROWS	31.2
FAP 685 (IL 9) - 0001 FUNDING				
1016+23.9	1016+43.9	LT	RAILROAD "X"	54.0
1016+23.9	1016+43.9	LT	RAILROAD "R"	7.2
1019+92.4	1021+37.4	LT	LEFT TURN ARROWS	31.2
1022+78.4	1024+31.6	LT	RIGHT TURN ARROWS	31.2
TOTAL				186.0
USE				186

MODIFIED URETHANE PAVEMENT MARKING - LINE 6"

78009006

STATION TO STATION		SIDE	DESCRIPTION	WHITE FOOT
FAP 538 (IL 94) - 0001 FUNDING				
1178+18.9	1180+58.9	RT	SKIP-DASH	60.0
1180+58.9	1182+35.8	RT	TURN LANE	176.9
FAP 685 (IL 9) - 0001 FUNDING				
1018+17.4	1019+92.4	CL	SKIP-DASH	44.0
1019+92.4	1021+37.4	CL	TURN LANE	145.0
1022+78.4	1024+13.6	LT	TURN LANE	135.3
1024+13.6	1025+88.6	LT	SKIP-DASH	44.0
TOTAL				605.2
USE				606

PREFORMED PLASTIC PAVEMENT MARKING TYPE B - INLAID - LINE 24"

78004280

STATION TO STATION		SIDE	DESCRIPTION	WHITE
FAP 538 (IL 94)				
1182+57.79	1182+59.7	RT	STOP BAR	12.0
1182+56.00	1182+69.4	RT	STOP BAR	18.0
FAP 685 (IL 9)				
1013+40.82	1013+42.8	RT	STOP BAR	12.0
1013+78.00	1013+80.0	LT	STOP BAR	12.0
1016+08.07	1016+10.0	LT	STOP BAR	12.0
1016+57.90	1016+59.9	LT	STOP BAR	12.0
TOTALS (WYE)				78.0
USE				78

ESTIMATED STRIPING QUANTITIES

PAY ITEM NUMBER	PAY ITEM	UNIT	QUANTITY	LOCATION/REASON
70103815	TRAFFIC CONTROL SURVEILLANCE	CAL DA	10	AS REQUIRED FOR DROP-OFFS
70300100	SHORT-TERM PAVEMENT MARKING	FOOT	5532	TEMPORARY STRIPING ON BINDER/SURFACE
70300210	TEMPORARY PAVEMENT MARKING - LETTERS & SYMBOLS	SQ FT	186	TEMPORARY STRIPING ON BINDER/SURFACE
70300230	TEMPORAY PAVEMENT MARKING - LINE 5"	FOOT	127622	TEMPORARY STRIPING ON BINDER/SURFACE
70300240	TEMPORAY PAVEMENT MARKING - LINE 6"	FOOT	606	TEMPORARY STRIPING ON BINDER/SURFACE
70300250	TEMPORAY PAVEMENT MARKING - LINE 8"	FOOT	354	TEMPORARY STRIPING ON BINDER/SURFACE
70300260	TEMPORAY PAVEMENT MARKING - LINE 12"	FOOT	654	TEMPORARY STRIPING ON BINDER/SURFACE
70300280	TEMPORAY PAVEMENT MARKING - LINE 24"	FOOT	78	TEMPORARY STRIPING ON BINDER/SURFACE
70301000	WORK ZONE PAVEMENT MARKING REMOVAL	SQ FT	2030	REMOVE SHORT-TERM

TEMPORARY SOIL RETENTION SYSTEM

Z0073002

STATION	SIDE	HEIGHT	WIDTH	SQ FT
FAP 685 (IL 9)				
1013+49.5	LT	10	20	200
1013+49.5	RT	10	10	100
1013+76.0	LT	16	15	240
1013+76.0	RT	14	25	350
1177+71.5	LT	13	15	195
1178+13.6	RT	13	15	195
TOTAL (WYE)				1280

CONCRETE WINGWALL REMOVAL

X0300015

NO.	STATION	SIDE	EACH
FAP 538 (IL 94)			
1	1121+06.90	LT	1
2	1121+06.90	RT	1
3	1174+52.39	LT	1
4	1174+52.39	RT	1
5	1177+92.50	LT	1
6	1177+92.50	RT	1
FAP 685 (IL 9)			
1	1013+49.5	LT	1
2	1013+49.5	RT	1
4	1013+76.0	LT	1
5	1013+76.0	RT	1
TOTAL			10

SOLAR-POWERED FLASHING BEACON ASSEMBLY (COMPLETE)

X0326899

STATION	SIDE	EACH
FAP 538 (IL 94) - 0005 FUNDING		
982+20	RT	1
FAP 685 (IL 9) - 0001 FUNDING		
1008+65	RT	1
1036+80	LT	1
TOTAL		3

AGGREGATE SHOULDERS, TYPE B (SPECIAL)

X4811300

STATION TO STATION		SIDE	TON
FAP 538 (IL 94) - 0005 FUNDING			
1019+06.0	1022+34.0	RT	18.7
1019+56.0	1022+84.0	LT	18.7
1100+22.2	1103+05.5	RT	16.1
1100+97.2	1103+05.5	LT	11.9
1104+08.2	1106+03.8	RT	11.1
1104+08.2	1106+91.3	LT	16.1
1145+10.1	1148+05.8	RT	16.8
1146+04.5	1147+87.3	LT	10.4
1149+21.2	1150+78.8	RT	9.0
1149+02.7	1151+48.4	LT	14.0
TOTAL			142.8
USE			143

LONGITUDINAL PARTIAL DEPTH PATCHING

STATION TO STATION		SIDE	LENGTH	WIDTH	X4405020 LONGITUDINAL PARTIAL DEPTH REMOVAL 2"	X4420900 LONGITUDINAL PARTIAL DEPTH PATCHING
			FOOT	FOOT	FOOT	TON
FAP 538 (IL 94)						
1014+70.00	1019+86.00	LT & RT	516.0	3.0	1032	38.5
1023+20.00	1030+30.00	LT & RT	710.0	3.0	1420	53.0
1081+20.00	1088+05.00	LT & RT	685.0	3.0	1370	51.1
1110+95.00	1114+80.00	LT & RT	385.0	3.0	770	28.7
SUBTOTAL (PPP)					4592	171.4
USE						172

NOTE: LONGITUDINAL REMOVAL AND PATCHING WORK SHALL BE DONE AFTER HMA SURFACE REMOVAL

TOPSOIL EXCAVATION

X2111000

STATION TO STATION		SIDE	CU YD
FAP 538 (IL 94) - 0001 FUNDING			
1179+65	1182+80	LT & RT	2239.6
TOTAL			2239.6
USE			2240

REMOVE AND RELAY END SECTIONS

X0358300

STATION	SIDE	EACH
FAP 538 (IL 94)		
1107+81.0	RT	1
TOTAL (PPP)		1

ROCK FILL - EMBANKMENT

Z0054404

STATION TO STATION		SIDE	DEPTH (FT)	LENGTH	CU YD
FAP 538 (IL 94)					
1121+25.00	1122+70.00	LT	3	145.0	75.7
TOTAL Y QUANTITY					75.7
USE					76

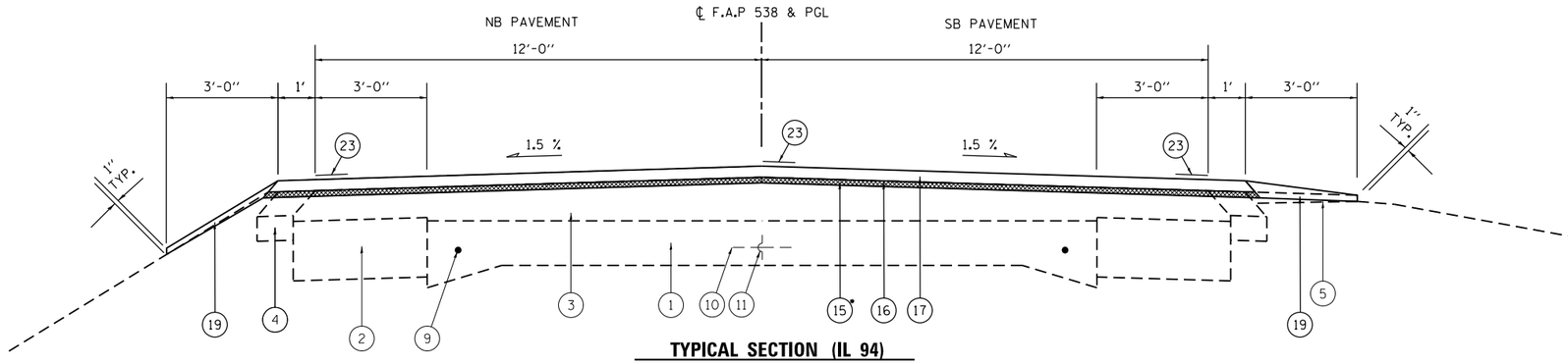

TYPICAL SECTION (IL 94)

STA. 987+20+.00 TO STA. 989+40.29
STA. 998+72.43 TO STA. 1015+00.00
STA. 1022+10.00 TO STA. 1023+50.00 RT
STA. 1022+60.00 TO STA. 1023+50.00 LT
STA. 1030+00.00 TO STA. 1081+50.00
STA. 1087+75.00 TO STA. 1100+52.15 RT
STA. 1087+75.00 TO STA. 1101+27.15 LT
STA. 1105+73.84 TO STA. 1111+25.00 RT
STA. 1106+61.34 TO STA. 1111+25.00 LT
STA. 1114+50.00 TO STA. 1119+00.00
STA. 1124+00 TO STA. 1135+50.00
STA. 1142+00.00 TO STA. 1145+40.11 RT
STA. 1142+00.00 TO STA. 1146+34.51 LT
STA. 1150+48.75 TO STA. 1152+40.00 RT
STA. 1151+18.39 TO STA. 1152+40.00 LT
STA. 1152+40.00 TO STA. 1154+00.00 RT (HMA SURF REM 2¼")
STA. 1157+25.00 TO STA. 1158+00.00 RT (HMA SURF REM 2¼")
STA. 1158+00.00 TO STA. 1173+78.50
STA. 1173+78.50 TO STA 1175+15.50 RT

• - END BIT SURF REMOVAL @ STA. 1176+62

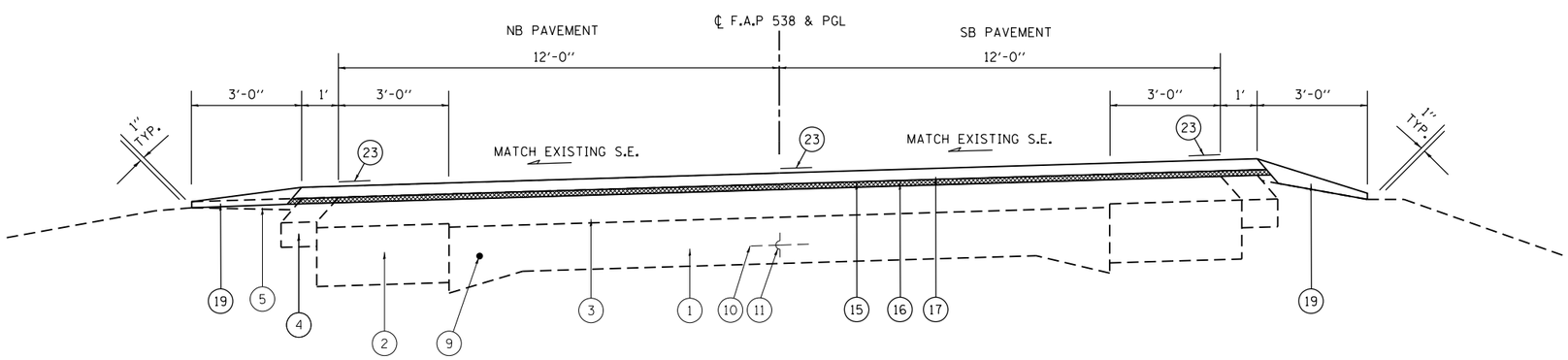

TYPICAL SECTION (IL 94)

STA 989+40.29 (P.C.) TO STA 998+72.43 (P.T.)

EXISTING LEGEND

1. EXISTING P.C.C. PAVEMENT, 9"-6"-9"
2. EXISTING HOT-MIX ASPHALT BASE COURSE WIDENING, 8"
3. EXISTING BITUMINIOUS OVERLAY, ± 8"

3A. EXISTING BITUMINIOUS OVERLAY, ± 5"

4. EXISTING HOT-MIX ASPHALT SHOULDERS
5. EXISTING AGGREGATE SHOULDERS, TYPE B
6. EXISTING CONCRETE GUTTER, TYPE A
7. EXISTING CONCRETE GUTTER, TYPE B
8. EXISTING CONCRETE GUTTER, TYPE C
9. EXISTING ¾" Ø SMOOTH BAR-CONTINOUS
10. EXISTING ½" Ø DEFORMED BAR @ 5' CENTERS
11. EXISTING LONGITUDINAL METAL JOINT
12. EXISTING CONCRETE GUTTER EXTENSION
13. EXISTING BITUMINOUS OVERLAY, ± 2 1/4"
14. EXISTING HOT-MIX ASPHALT WIDENING, 9"

PROPOSED LEGEND

15. PROPOSED HOT-MIX ASPHALT SURFACE REMOVAL, ¾" AND VARIES (PAID AS VARIABLE DEPTH)
16. PROPOSED HOT-MIX ASPHALT LEVELING BINDER, ¾"
17. PROPOSED HOT-MIX ASPHALT SURFACE COURSE, MIX C, N50, 1½"
18. PROPOSED STEEL PLATE BEAM GUARDRAIL, TYPE A, 6 FT POSTS
19. PROPOSED AGGREGATE WEDGE SHOULDER, TYPE B (VARIES 3.5" TO 1.0")
20. PROPOSED TAPER OF HOT-MIX ASPHALT SURFACE COURSE TO MATCH EXISTING ELEVATION
21. PROPOSED HOT-MIX ASPHALT SURFACE REMOVAL, 2¼" AND VARIES
22. PROPOSED SUBBASE GRANULAR MATERIAL, TYPE A, 8"
23. PROPOSED PAVEMENT MARKING LINE
24. PROPOSED HOT-MIX ASPHALT BINDER COURSE, IL-19.0, N50, (2¼" MINIMUM)
25. PROPOSED HOT-MIX ASPHALT BASE COURSE, 6½"
26. PROPOSED CONCRETE GUTTER, TYPE A
27. PROPOSED PAVEMENT OR GUTTER REMOVAL
28. PROPOSED STONE DUMPED RIPRAP, CLASS A4
29. PROPOSED HOT-MIX ASPHALT BASE COURSE, 12"
30. PROPOSED HOT-MIX ASPHALT SHOULDERS, 6½"
31. PROPOSED HOT-MIX ASPHALT SHOULDERS, 8" W/ SHOULDER RUMBLE STRIPS, 8"
32. PROPOSED HOT-MIX ASPHALT BASE COURSE, 7½"

EXISTING LEGEND

1. EXISTING P.C.C. PAVEMENT, 9''-6''-9''
2. EXISTING HOT-MIX ASPHALT BASE COURSE WIDENING, 8''
3. EXISTING BITUMINIOUS OVERLAY, ± 8''
3A. EXISTING BITUMINIOUS OVERLAY, ± 5''
4. EXISTING HOT-MIX ASPHALT SHOULDERS
5. EXISTING AGGREGATE SHOULDERS, TYPE B
6. EXISTING CONCRETE GUTTER, TYPE A
7. EXISTING CONCRETE GUTTER, TYPE B
8. EXISTING CONCRETE GUTTER, TYPE C
9. EXISTING ¾'' Ø SMOOTH BAR-CONTINOUS
10. EXISTING ½'' Ø DEFORMED BAR @ 5' CENTERS
11. EXISTING LONGITUDINAL METAL JOINT
12. EXISTING CONCRETE GUTTER EXTENSION
13. EXISTING BITUMINOUS OVERLAY, ± 2 1/4''
14. EXISTING HOT-MIX ASPHALT WIDENING, 9''

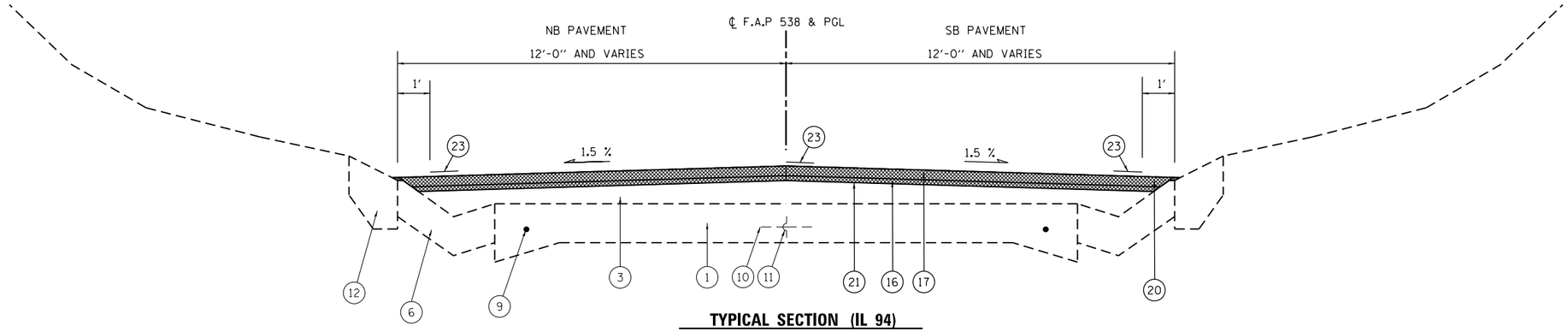

TYPICAL SECTION (IL 94)

STA. 1015+00.00 TO STA. 1019+06.00 RT
STA. 1015+00.00 TO STA. 1019+56.00 LT
STA. 1135+50.00 TO STA. 1142+00.00
STA. 1152+40.00 TO STA. 1154+00.00 LT
STA. 1154+00.00 TO STA. 1157+25.00
STA. 1157+25.00 TO STA. 1158+00.00 LT

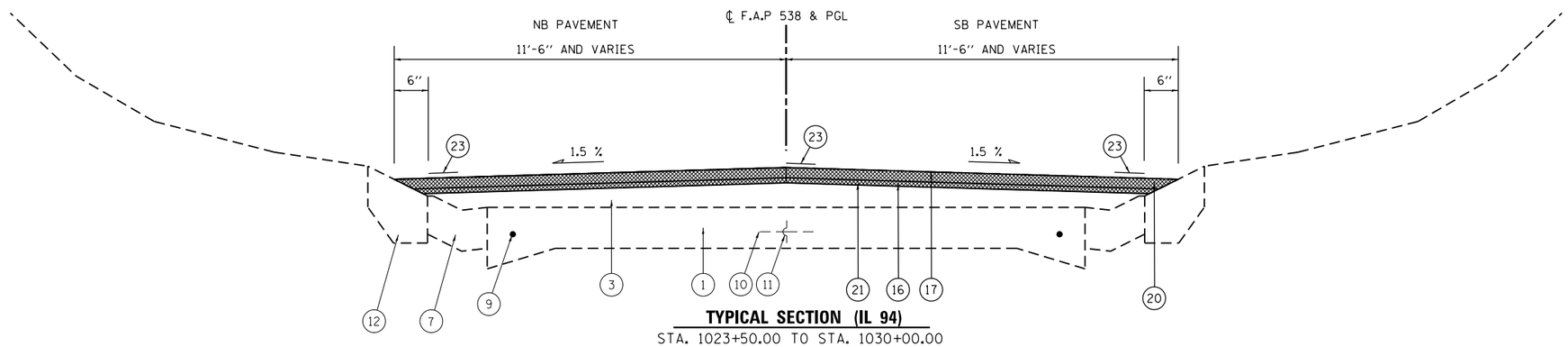

TYPICAL SECTION (IL 94)

STA. 1023+50.00 TO STA. 1030+00.00
STA. 1081+50.00 TO STA. 1087+75.00
STA. 1111+25.00 TO STA. 1114+50.00

PROPOSED LEGEND

15. PROPOSED HOT-MIX ASPHALT SURFACE REMOVAL, ¾'' AND VARIES (PAID AS VARIABLE DEPTH)
16. PROPOSED HOT-MIX ASPHALT LEVELING BINDER, ¾''
17. PROPOSED HOT-MIX ASPHALT SURFACE COURSE, MIX C, N50, 1½''
18. PROPOSED STEEL PLATE BEAM GUARDRAIL, TYPE A, 6 FT POSTS
19. PROPOSED AGGREGATE WEDGE SHOULDER, TYPE B (VARIES 3.5'' TO 1.0'')
20. PROPOSED TAPER OF HOT-MIX ASPHALT SURFACE COURSE TO MATCH EXISTING ELEVATION
21. PROPOSED HOT-MIX ASPHALT SURFACE REMOVAL, 2¼'' AND VARIES
22. PROPOSED SUBBASE GRANULAR MATERIAL, TYPE A, 8''
23. PROPOSED PAVEMENT MARKING LINE
24. PROPOSED HOT-MIX ASPHALT BINDER COURSE, IL-19.0, N50, (2¼'' MINIMUM)
25. PROPOSED HOT-MIX ASPHALT BASE COURSE, 6½''
26. PROPOSED CONCRETE GUTTER, TYPE A
27. PROPOSED PAVEMENT OR GUTTER REMOVAL
28. PROPOSED STONE DUMPED RIPRAP, CLASS A4
29. PROPOSED HOT-MIX ASPHALT BASE COURSE, 12''
30. PROPOSED HOT-MIX ASPHALT SHOULDERS, 6½''
31. PROPOSED HOT-MIX ASPHALT SHOULDERS, 8'' W/ SHOULDER RUMBLE STRIPS, 8''
32. PROPOSED HOT-MIX ASPHALT BASE COURSE, 7½''

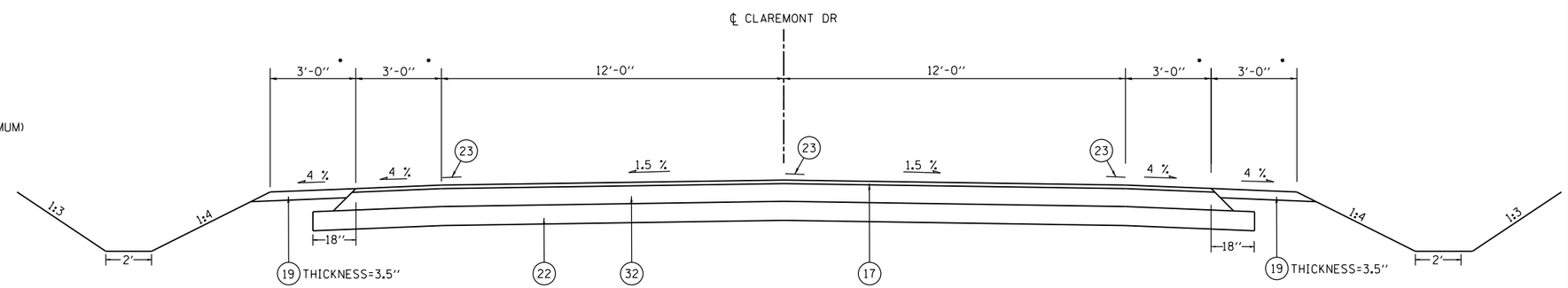

TYPICAL SECTION (CLAREMONT RD)

STA. 10+13.00 TO STA. 10+50.00

• - EARTH SHOULDERS AT STA. 10+40 TO STA. 10+50

FILE NAME = c:\pw_work\pwidot\edwardsjd\d0388419\D672C60-sht-Typical.dgn	USER NAME = edwardsjd	DESIGNED -	REVISED -
		DRAWN -	REVISED -
	PLOT SCALE = 100.0000 ' / in.	CHECKED -	REVISED -
Default	PLOT DATE = Mar-10-2015 02:58:13PM	DATE -	REVISED -

STATE OF ILLINOIS
DEPARTMENT OF TRANSPORTATION

TYPICAL SECTIONS

SCALE: none | SHEET 2 OF 5 SHEETS | STA. TO STA.

F.A.P. RTE.	SECTION	COUNTY	TOTAL SHEETS	SHEET NO.
685/538	(112)RS-3,L,N,I	HANCOCK	156	26
		CONTRACT NO. 72C60		
		ILLINOIS FED. AID PROJECT		

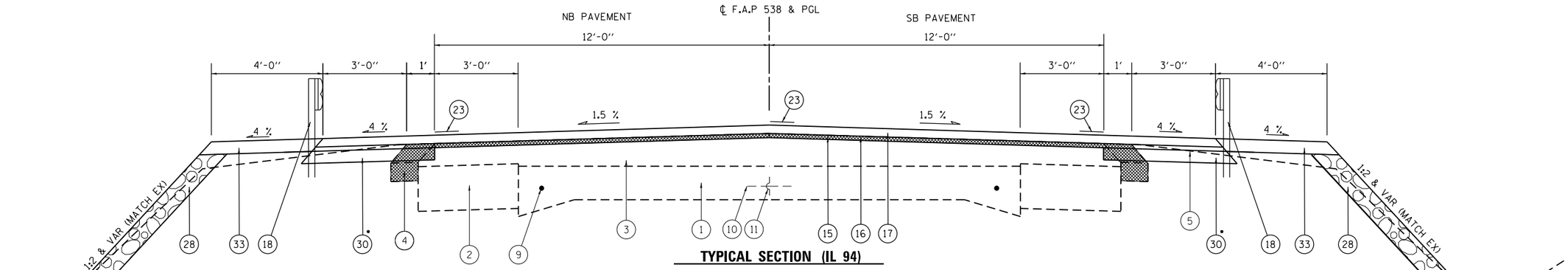

TYPICAL SECTION (IL 94)

STA. 1019+06.00 TO STA. 1022+10.00 RT
STA. 1019+56.00 TO STA. 1022+60.00 LT
STA. 1100+52.15 TO STA. 1103+05.39 RT
STA. 1101+27.15 TO STA. 1103+05.39 LT
BRIDGE OMISSION STA. 1103+05.39 TO STA. 1104+08.20
STA. 1104+08.20 TO STA. 1105+73.84 RT
STA. 1104+08.20 TO STA. 1106+61.34 LT
STA. 1145+40.11 TO STA. 1148+09.26 RT
STA. 1146+34.51 TO STA. 1148+09.26 LT
BRIDGE OMISSION STA. 1148+09.26 TO STA. 1148+99.20
STA. 1148+99.20 TO STA. 1150+48.75 RT
STA. 1148+99.20 TO STA. 1151+18.39 LT

• - EARTH EXCAVATION (WIDENING)

• - EARTH EXCAVATION (WIDENING)

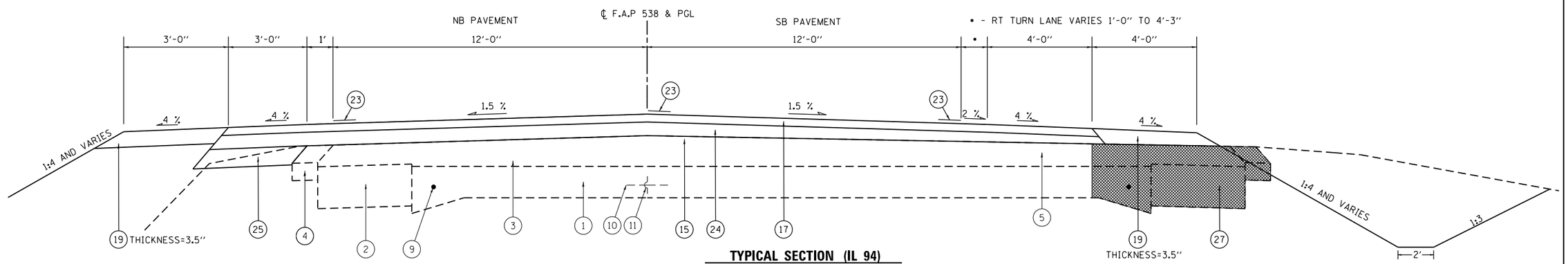

TYPICAL SECTION (IL 94)

STA. 1177+97.00 TO STA. 1178+89.16

EXISTING LEGEND

1. EXISTING P.C.C. PAVEMENT, 9"-6"-9"
2. EXISTING HOT-MIX ASPHALT BASE COURSE WIDENING, 8"
3. EXISTING BITUMINIOUS OVERLAY, ± 8"
3A. EXISTING BITUMINIOUS OVERLAY, ± 5"
4. EXISTING HOT-MIX ASPHALT SHOULDERS
5. EXISTING AGGREGATE SHOULDERS, TYPE B
6. EXISTING CONCRETE GUTTER, TYPE A
7. EXISTING CONCRETE GUTTER, TYPE B
8. EXISTING CONCRETE GUTTER, TYPE C
9. EXISTING ¾" Ø SMOOTH BAR-CONTINOUS
10. EXISTING ½" Ø DEFORMED BAR @ 5' CENTERS
11. EXISTING LONGITUDINAL METAL JOINT
12. EXISTING CONCRETE GUTTER EXTENSION
13. EXISTING BITUMINOUS OVERLAY, ± 2 1/4"
14. EXISTING HOT-MIX ASPHALT WIDENING, 9"

PROPOSED LEGEND

15. PROPOSED HOT-MIX ASPHALT SURFACE REMOVAL, ¾" AND VARIES (PAID AS VARIABLE DEPTH)
16. PROPOSED HOT-MIX ASPHALT LEVELING BINDER, ¾"
17. PROPOSED HOT-MIX ASPHALT SURFACE COURSE, MIX C, N50, 1½"
18. PROPOSED STEEL PLATE BEAM GUARDRAIL, TYPE A, 6 FT POSTS
19. PROPOSED AGGREGATE WEDGE SHOULDER, TYPE B (VARIES 3.5" TO 1.0")
20. PROPOSED TAPER OF HOT-MIX ASPHALT SURFACE COURSE TO MATCH EXISTING ELEVATION
21. PROPOSED HOT-MIX ASPHALT SURFACE REMOVAL, 2¼" AND VARIES
22. PROPOSED SUBBASE GRANULAR MATERIAL, TYPE A, 8"
23. PROPOSED PAVEMENT MARKING LINE
24. PROPOSED HOT-MIX ASPHALT BINDER COURSE, IL-19.0, N50, (2¼" MINIMUM)
25. PROPOSED HOT-MIX ASPHALT BASE COURSE, 6½"
26. PROPOSED CONCRETE GUTTER, TYPE A
27. PROPOSED PAVEMENT OR GUTTER REMOVAL
28. PROPOSED STONE DUMPED RIPRAP, CLASS A4
29. PROPOSED HOT-MIX ASPHALT BASE COURSE, 12"
30. PROPOSED HOT-MIX ASPHALT SHOULDERS, 6½"
31. PROPOSED HOT-MIX ASPHALT SHOULDERS, 8" W/ SHOULDER RUMBLE STRIPS, 8"
32. PROPOSED HOT-MIX ASPHALT BASE COURSE, 7½"
33. PROPOSED AGGREGATE SHOULDERS, TYPE B (SPECIAL) (VARIES 3.5" TO 1" THICKNESS)

FILE NAME = c:\pw_work\pwidot\edwardsjd\d0388419\D672C60-sht-Typical.dgn	USER NAME = edwardsjd	DESIGNED -	REVISED -
	PLOT SCALE = 100.0000 ' / in.	DRAWN -	REVISED -
Default	PLOT DATE = Mar-10-2015 02:58:14PM	CHECKED -	REVISED -
		DATE -	REVISED -

STATE OF ILLINOIS
DEPARTMENT OF TRANSPORTATION

TYPICAL SECTIONS

SCALE: none | SHEET 3 OF 5 SHEETS | STA. TO STA.

F.A.P. RTE.	SECTION	COUNTY	TOTAL SHEETS	SHEET NO.
685/538	(112)RS-3,L,N,I	HANCOCK	156	27

CONTRACT NO. 72C60

ILLINOIS FED. AID PROJECT

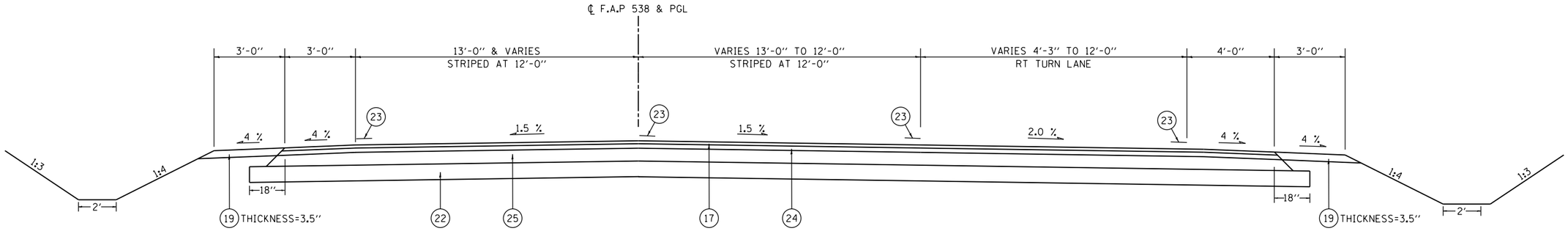

TYPICAL SECTION (IL 94)

STA. 1178+89.16 TO STA. 1182+78.90

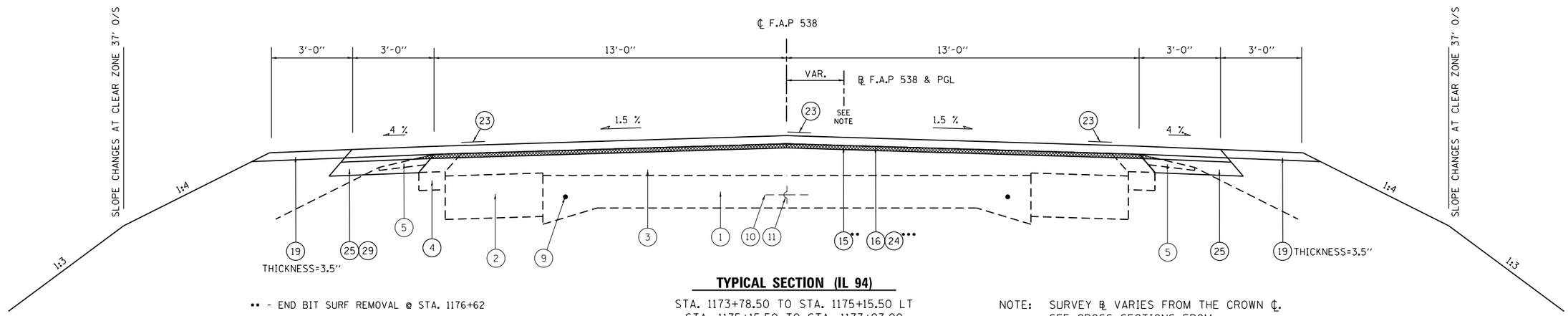

TYPICAL SECTION (IL 94)

STA. 1173+78.50 TO STA. 1175+15.50 LT
STA. 1175+15.50 TO STA. 1177+97.00
STA. 1119+00.00 TO STA. 1124+00.00 (SEE NOTE)

•• - END BIT SURF REMOVAL @ STA. 1176+62

••• - STA 1176+85 END LEVELING BINDER / BEGIN BINDER

NOTE: SURVEY ℄ VARIES FROM THE CROWN ℄. SEE CROSS SECTIONS FROM STA. 1119+00 TO STA. 1124+00. ADDITIONAL LEVELING BINDER IS PROVIDED IN THE SCHEDULE TO CORRECT THE PAVEMENT SLOPE IN THE NORTHBOUND LANE.

EXISTING LEGEND

1. EXISTING P.C.C. PAVEMENT, 9"-6"-9"
2. EXISTING HOT-MIX ASPHALT BASE COURSE WIDENING, 8"
3. EXISTING BITUMINIOUS OVERLAY, ± 8"
3A. EXISTING BITUMINIOUS OVERLAY, ± 5"
4. EXISTING HOT-MIX ASPHALT SHOULDERS
5. EXISTING AGGREGATE SHOULDERS, TYPE B
6. EXISTING CONCRETE GUTTER, TYPE A
7. EXISTING CONCRETE GUTTER, TYPE B
8. EXISTING CONCRETE GUTTER, TYPE C
9. EXISTING ¾" Ø SMOOTH BAR-CONTINOUS
10. EXISTING ½" Ø DEFORMED BAR @ 5' CENTERS
11. EXISTING LONGITUDINAL METAL JOINT
12. EXISTING CONCRETE GUTTER EXTENSION
13. EXISTING BITUMINOUS OVERLAY, ± 2 1/4"
14. EXISTING HOT-MIX ASPHALT WIDENING, 9"

PROPOSED LEGEND

15. PROPOSED HOT-MIX ASPHALT SURFACE REMOVAL, ¾" AND VARIES (PAID AS VARIABLE DEPTH)
16. PROPOSED HOT-MIX ASPHALT LEVELING BINDER, ¾"
17. PROPOSED HOT-MIX ASPHALT SURFACE COURSE, MIX C, N50, 1½"
18. PROPOSED STEEL PLATE BEAM GUARDRAIL, TYPE A, 6 FT POSTS
19. PROPOSED AGGREGATE WEDGE SHOULDER, TYPE B (VARIES 3.5" TO 1.0")
20. PROPOSED TAPER OF HOT-MIX ASPHALT SURFACE COURSE TO MATCH EXISTING ELEVATION
21. PROPOSED HOT-MIX ASPHALT SURFACE REMOVAL, 2¼" AND VARIES
22. PROPOSED SUBBASE GRANULAR MATERIAL, TYPE A, 8"
23. PROPOSED PAVEMENT MARKING LINE
24. PROPOSED HOT-MIX ASPHALT BINDER COURSE, IL-19.0, N50, (2¼" MINIMUM)
25. PROPOSED HOT-MIX ASPHALT BASE COURSE, 6½"
26. PROPOSED CONCRETE GUTTER, TYPE A
27. PROPOSED PAVEMENT OR GUTTER REMOVAL
28. PROPOSED STONE DUMPED RIPRAP, CLASS A4
29. PROPOSED HOT-MIX ASPHALT BASE COURSE, 12"
30. PROPOSED HOT-MIX ASPHALT SHOULDERS, 6½"
31. PROPOSED HOT-MIX ASPHALT SHOULDERS, 8" W/ SHOULDER RUMBLE STRIPS, 8"
32. PROPOSED HOT-MIX ASPHALT BASE COURSE, 7½"

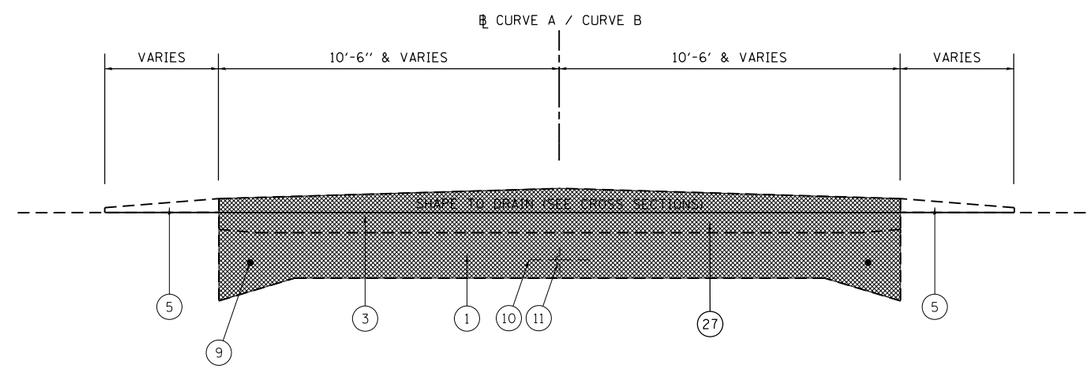

TYPICAL SECTION (CURVE A /CURVE B)

FILE NAME = c:\pw_work\pwidot\edwardsjd\d0388419\D672C60-sht-Typical.dgn	USER NAME = edwardsjd	DESIGNED -	REVISED -	STATE OF ILLINOIS DEPARTMENT OF TRANSPORTATION	TYPICAL SECTIONS			F.A.P. RTE.	SECTION	COUNTY	TOTAL SHEETS / SHEET NO.
	PLOT SCALE = 100.0000 ' / in.	DRAWN -	REVISED -					685/538	(112)RS-3,L,N,I	HANCOCK	156 / 28
	PLOT DATE = Mar-10-2015 02:58:15PM	CHECKED -	REVISED -							CONTRACT NO. 72C60	
Default		DATE -	REVISED -		SCALE: none	SHEET 4 OF 5 SHEETS	STA. TO STA.		ILLINOIS FED. AID PROJECT		

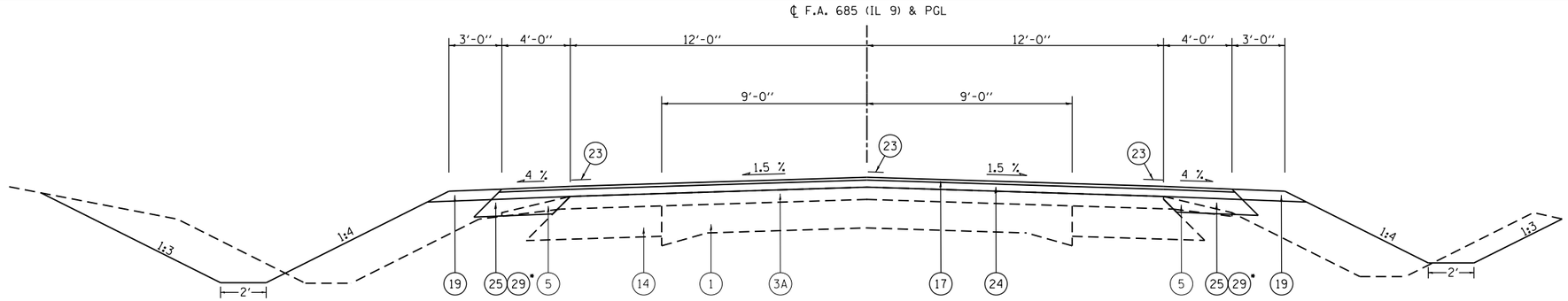

TYPICAL SECTION (IL 9)

STA. 1012+27.31 TO STA. 1013+55.25
RAILROAD OMISSION STA. 1013+55.25 TO STA. 1013+66.37
STA. 1013+66.37 TO STA. 1014+57.35
STA. 1027+73.61 TO STA. 1031+78.00

• - 12" HMA BASE COURSE
STA. 1013+66.37 TO STA. 1014+35.00 AND
STA. 1031+05.00 TO STA. 1031+78.00

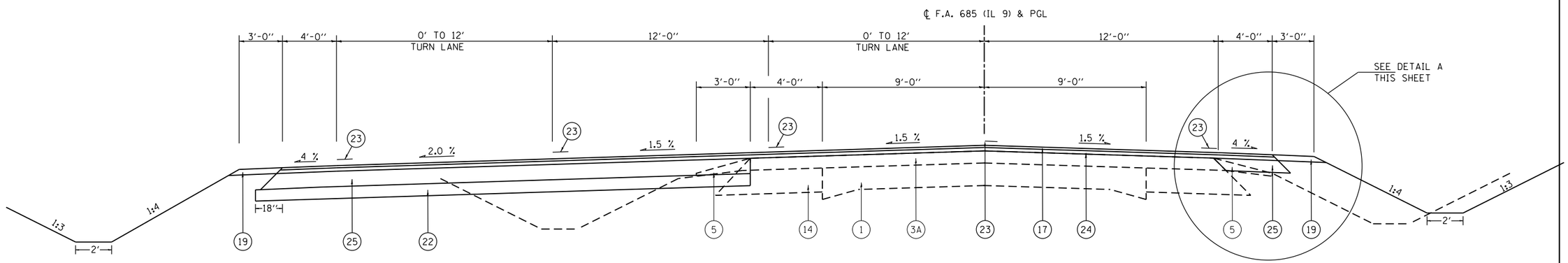

TYPICAL SECTION (IL 9)

STA. 1014+57.35 TO STA. 1027+73.61

EXISTING LEGEND

1. EXISTING P.C.C. PAVEMENT, 9"-6"-9"
2. EXISTING HOT-MIX ASPHALT BASE COURSE WIDENING, 8"
3. EXISTING BITUMINIOUS OVERLAY, ± 8"
3A. EXISTING BITUMINIOUS OVERLAY, ± 5"
4. EXISTING HOT-MIX ASPHALT SHOULDERS
5. EXISTING AGGREGATE SHOULDERS, TYPE B
6. EXISTING CONCRETE GUTTER, TYPE A
7. EXISTING CONCRETE GUTTER, TYPE B
8. EXISTING CONCRETE GUTTER, TYPE C
9. EXISTING ¾" Ø SMOOTH BAR-CONTINOUS
10. EXISTING ½" Ø DEFORMED BAR @ 5' CENTERS
11. EXISTING LONGITUDINAL METAL JOINT
12. EXISTING CONCRETE GUTTER EXTENSION
13. EXISTING BITUMINOUS OVERLAY, ± 2 1/4"
14. EXISTING HOT-MIX ASPHALT WIDENING, 9"

PROPOSED LEGEND

15. PROPOSED HOT-MIX ASPHALT SURFACE REMOVAL, ¾" AND VARIES (PAID AS VARIABLE DEPTH)
16. PROPOSED HOT-MIX ASPHALT LEVELING BINDER, ¾"
17. PROPOSED HOT-MIX ASPHALT SURFACE COURSE, MIX C, N50, 1½"
18. PROPOSED STEEL PLATE BEAM GUARDRAIL, TYPE A, 6 FT POSTS
19. PROPOSED AGGREGATE WEDGE SHOULDER, TYPE B (VARIES 3.5" TO 1.0")
20. PROPOSED TAPER OF HOT-MIX ASPHALT SURFACE COURSE TO MATCH EXISTING ELEVATION
21. PROPOSED HOT-MIX ASPHALT SURFACE REMOVAL, 2¼" AND VARIES
22. PROPOSED SUBBASE GRANULAR MATERIAL, TYPE A, 8"
23. PROPOSED PAVEMENT MARKING LINE
24. PROPOSED HOT-MIX ASPHALT BINDER COURSE, IL-19.0, N50, (2¼" MINIMUM)
25. PROPOSED HOT-MIX ASPHALT BASE COURSE, 6½"
26. PROPOSED CONCRETE GUTTER, TYPE A
27. PROPOSED PAVEMENT OR GUTTER REMOVAL
28. PROPOSED STONE DUMPED RIPRAP, CLASS A4
29. PROPOSED HOT-MIX ASPHALT BASE COURSE, 12"
30. PROPOSED HOT-MIX ASPHALT SHOULDERS, 6½"
31. PROPOSED HOT-MIX ASPHALT SHOULDERS, 8" W/ SHOULDER RUMBLE STRIPS, 8"
32. PROPOSED HOT-MIX ASPHALT BASE COURSE, 7½"

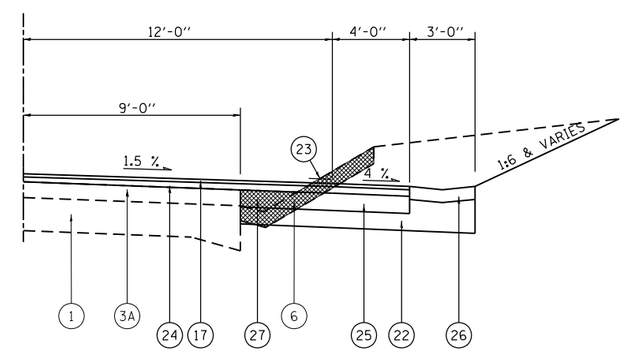

DETAIL A (IL 9)

STA. 1014+89.00 TO STA. 1018+65.00 LT
STA. 1014+89.00 TO STA. 1019+62.00 RT

FILE NAME = c:\pw_work\pwidot\edwardsjd\d0388419\D672C60-sht-Typical.dgn	USER NAME = edwardsjd	DESIGNED -	REVISED -	STATE OF ILLINOIS DEPARTMENT OF TRANSPORTATION	TYPICAL SECTIONS	F.A.P. RTE.	SECTION	COUNTY	TOTAL SHEETS	SHEET NO.
		DRAWN -	REVISED -			685/538	(112)RS-3,L,N,I	HANCOCK	156	29
	PLOT SCALE = 100.0000 ' / in.	CHECKED -	REVISED -					CONTRACT NO. 72C60		
Default	PLOT DATE = Mar-10-2015 02:58:15PM	DATE -	REVISED -		SCALE: none / SHEET 5 OF 5 SHEETS / STA. TO STA.		ILLINOIS	FED. AID PROJECT		

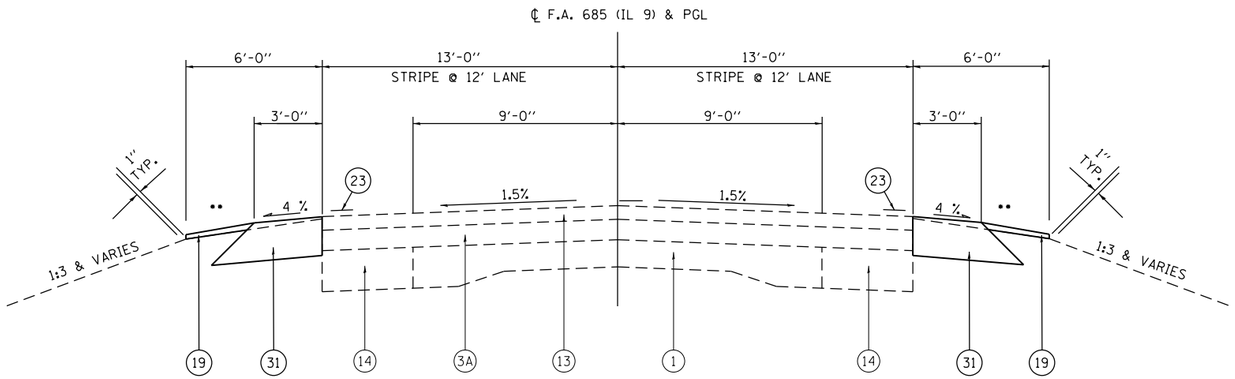

FAP 685 (IL 9) TYPICAL SECTION

GENERAL TYPICAL SECTION FOR:
STA 1083+00 TO STA 1269+77.10

STATION EQUATIONS:
STA 1262+55.89 BK = STA 1263+31.52 AH
STA 1269+77.10 BK = STA 0+00.00 AH

- FOR OMISSIONS SEE SCHEDULE OF QUANTITIES
- •• AGGREGATE SHOULDER SLOPE=4% AND THICKNESS=3.5" IN THE FOLLOWING LOCATIONS:
  - STA. 1119+11 TO STA. 1120+61
  - STA. 1137+89 TO STA. 1139+39
  - STA. 1171+56 TO STA. 1173+08
  - STA. 1188+78 TO STA. 1190+29

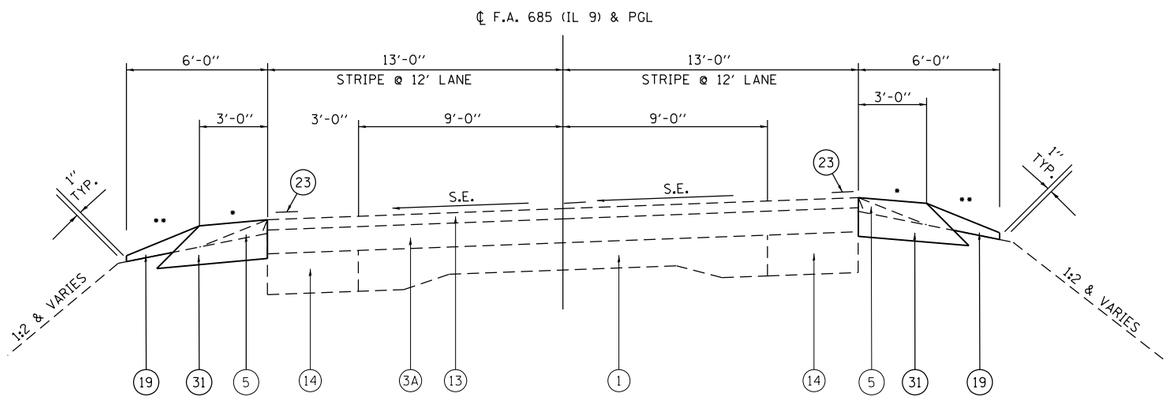

TYPICAL FAP 685 (IL 9) SUPERELEVATED SECTION

STA 1105+67.30 TO STA 1108+07.30	(S.E. TRANSITION)
STA 1108+07.30 TO STA 1113+21.60	(S.E. = 6.8%)
STA 1113+21.60 TO STA 1115+61.60	(S.E. TRANSITION)
STA 1169+74.10 TO STA 1172+14.10	(S.E. TRANSITION)
STA 1172+14.10 TO STA 1178+72.30	(S.E. = 8.0%)
STA 1178+72.30 TO STA 1181+12.30	(S.E. TRANSITION)
STA 1182+56.00 TO STA 1184+96.00	(S.E. TRANSITION)
STA 1184+96.00 TO STA 1200+68.90	(S.E. = 3.0%)
STA 1200+68.90 TO STA 1203+08.90	(S.E. TRANSITION)
STA 1221+50.10 TO STA 1223+90.10	(S.E. TRANSITION)
STA 1224+20.00 TO STA 1230+05.10	(S.E. = 1.6%)
STA 1230+05.10 TO STA 1232+45.10	(S.E. TRANSITION)
STA 1253+39.10 TO STA 1255+79.10	(S.E. TRANSITION)
STA 1255+79.10 TO STA 1261+79.90(BK)	(S.E. = 5.0%)
STA 1261+79.90(BK) TO STA 1264+95.53(AH)	(S.E. TRANSITION)

- ON THE HIGH SIDE OF SUPERELEVATED SECTIONS, THE ALGEBRAIC DIFFERENCE OF THE ROLLOVER SHOULD NOT EXCEED 8.0%
- ON THE LOW SIDE OF SUPERELEVATED SECTIONS, THE TYPICAL PRACTICE IS TO RETAIN THE NORMAL SHOULDER SLOPE (4%) UNTIL THE ADJACENT SUPERELVATED TRAVEL LANE REACHES THAT SLOPE. THE SHOULDER IS THEN SUPERELEVATED CONCURRENTLY WITH THE TRAVEL LANE UNTIL THE DESIGN SUPERELEVATION RATE IS REACHED.

EXISTING LEGEND

1. EXISTING P.C.C. PAVEMENT, 9"-6"-9"
2. EXISTING HOT-MIX ASPHALT BASE COURSE WIDENING, 8"
3. EXISTING BITUMINIOUS OVERLAY, ± 8"
3A. EXISTING BITUMINIOUS OVERLAY, ± 5"
4. EXISTING HOT-MIX ASPHALT SHOULDERS
5. EXISTING AGGREGATE SHOULDERS, TYPE B
6. EXISTING CONCRETE GUTTER, TYPE A
7. EXISTING CONCRETE GUTTER, TYPE B
8. EXISTING CONCRETE GUTTER, TYPE C
9. EXISTING ¾" Ø SMOOTH BAR-CONTINOUS
10. EXISTING ½" Ø DEFORMED BAR @ 5' CENTERS
11. EXISTING LONGITUDINAL METAL JOINT
12. EXISTING CONCRETE GUTTER EXTENSION
13. EXISTING BITUMINOUS OVERLAY, ± 2 1/4"
14. EXISTING HOT-MIX ASPHALT WIDENING, 9"

PROPOSED LEGEND

15. PROPOSED HOT-MIX ASPHALT SURFACE REMOVAL, ¾" AND VARIES (PAID AS VARIABLE DEPTH)
16. PROPOSED HOT-MIX ASPHALT LEVELING BINDER, ¾"
17. PROPOSED HOT-MIX ASPHALT SURFACE COURSE, MIX C, N50, 1½"
18. PROPOSED STEEL PLATE BEAM GUARDRAIL, TYPE A, 6 FT POSTS
19. PROPOSED AGGREGATE WEDGE SHOULDER, TYPE B (VARIES 3.5" TO 1.0")
20. PROPOSED TAPER OF HOT-MIX ASPHALT SURFACE COURSE TO MATCH EXISTING ELEVATION
21. PROPOSED HOT-MIX ASPHALT SURFACE REMOVAL, 2¼" AND VARIES
22. PROPOSED SUBBASE GRANULAR MATERIAL, TYPE A, 8"
23. PROPOSED PAVEMENT MARKING LINE
24. PROPOSED HOT-MIX ASPHALT BINDER COURSE, IL-19.0, N50, (2¼" MINIMUM)
25. PROPOSED HOT-MIX ASPHALT BASE COURSE, 6½"
26. PROPOSED CONCRETE GUTTER, TYPE A
27. PROPOSED PAVEMENT OR GUTTER REMOVAL
28. PROPOSED STONE DUMPED RIPRAP, CLASS A4
29. PROPOSED HOT-MIX ASPHALT BASE COURSE, 12"
30. PROPOSED HOT-MIX ASPHALT SHOULDERS, 6½"
31. PROPOSED HOT-MIX ASPHALT SHOULDERS, 8" W/ SHOULDER RUMBLE STRIPS, 8"
32. PROPOSED HOT-MIX ASPHALT BASE COURSE, 7½"

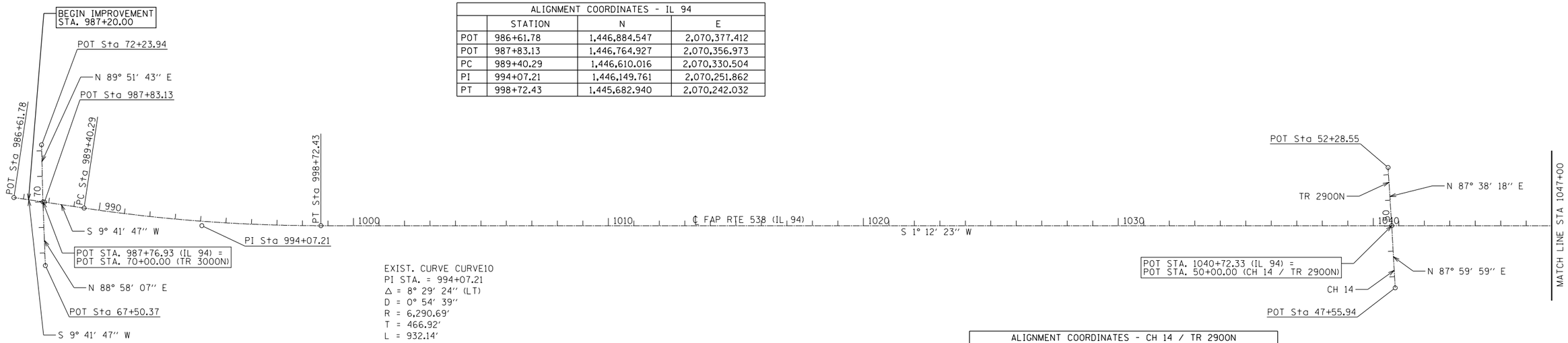

ALIGNMENT COORDINATES - IL 94			
	STATION	N	E
POT	986+61.78	1,446,884.547	2,070,377.412
POT	987+83.13	1,446,764.927	2,070,356.973
PC	989+40.29	1,446,610.016	2,070,330.504
PI	994+07.21	1,446,149.761	2,070,251.862
PT	998+72.43	1,445,682.940	2,070,242.032

ALIGNMENT COORDINATES - TR 3000N			
	STATION	N	E
POT	67+50.37	1,446,766.547	2,070,108.425
POT	70+00.00	1,446,771.040	2,070,358.018
POT	72+23.94	1,446,771.580	2,070,581.956

EXIST. CURVE CURVE10
PI STA. = 994+07.21
Δ = 8° 29′ 24″ (LT)
D = 0° 54′ 39″
R = 6,290.69′
T = 466.92′
L = 932.14′
E = 17.30′
e = R.C.
P.C. STA. = 989+40.29
P.T. STA. = 998+72.43

ALIGNMENT COORDINATES - CH 14 / TR 2900N			
	STATION	N	E
POT	47+55.94	1,441,475.457	2,069,909.704
POT	50+00.00	1,441,483.975	2,070,153.610
POT	52+28.55	1,441,493.393	2,070,381.967

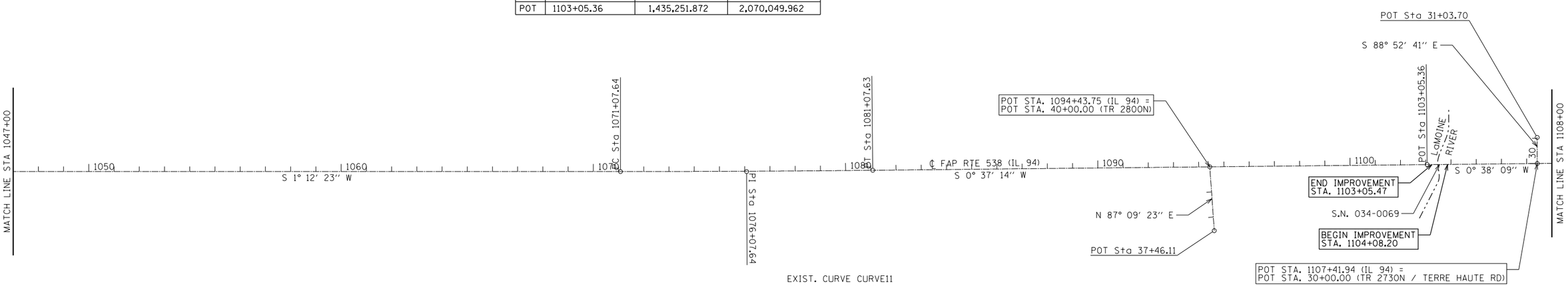

ALIGNMENT COORDINATES - IL 94			
	STATION	N	E
PC	1071+07.64	1,438,449.334	2,070,089.707
PI	1076+07.64	1,437,949.445	2,070,079.180
PT	1081+07.63	1,437,449.474	2,070,073.763
POT	1103+05.36	1,435,251.872	2,070,049.962

ALIGNMENT COORDINATES - TR 2800N			
	STATION	N	E
POT	30+00.00	1,434,815.318	2,070,045.118
POT	31+03.70	1,434,813.288	2,070,148.798

EXIST. CURVE CURVE11
PI STA. = 1076+07.64
Δ = 0° 35′ 08″ (LT)
D = 0° 03′ 31″
R = 97,859.65′
T = 500.00′
L = 999.99′
E = 1.28′
e = N.C.
P.C. STA. = 1071+07.64
P.T. STA. = 1081+07.63

ALIGNMENT COORDINATES - TR 2800N			
	STATION	N	E
POT	37+46.11	1,436,100.835	2,069,805.718
POT	40+00.00	1,436,113.431	2,070,059.293

FILE NAME = pw:\\IL084EBIDINTEG.illinois.gov:PWIDOT\Documents\IDOT Offices\District 6\Projects\D672C60\DRAWING\KLINGNER\District edit\CADD SHEETS\72C60-sht-Align01.dgn	USER NAME = sparksgw	DESIGNED -	REVISED -
		DRAWN -	REVISED -
	PLOT SCALE = 400.0000 ′ / in.	CHECKED -	REVISED -
	PLOT DATE = 10/23/2014	DATE -	REVISED -

STATE OF ILLINOIS
DEPARTMENT OF TRANSPORTATION

HORIZONTAL ALIGNMENT

SCALE: 1″=200′ | SHEET NO. 1 OF 2 SHEETS | STA. 986+61.78 TO STA. 1108+00.00

F.A.P RTE.	SECTION	COUNTY	TOTAL SHEETS	SHEET NO.
685/538	(112)RS-3, L, N, I	HANCOCK	156	31
		CONTRACT NO. 72C60		

FED. ROAD DIST. NO. 6 | ILLINOIS | FED. AID PROJECT

ALIGNMENT COORDINATES - IL 94			
	STATION	N	E
POT	1135+56.89	1,432,000.542	2,070,013.881
POT	1148+54.00	1,430,703.512	2,069,999.487
POT	1160+79.00	1,429,478.587	2,069,985.894

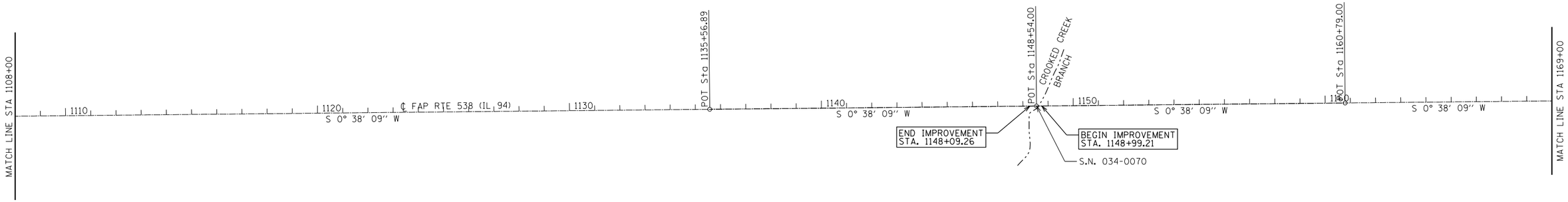

BM #N-33
NGS DISK SET IN TOP OF 2′X3′ BOX CULVERT
UNDER HWY IL 9 & IL 94
NW QUAD IL 9 & RAILROAD X-SING
STA 1013+40.86, 17.2′ LT
ELEV 665.27

BM #TA-1
SET CHSLD ″□″ CENTER OF OF WEST HDWL
UNDER EAST CURVE @ ″Y″ INT
OF HWY IL 9 & IL 94
STA 1023+33.08, 152.1′ LT
ELEV 675.54

BM #TA-2
SET CHSLD ″+″ NE BOLT FIRE HYDRANT
NE CORNER CASEY'S GENERAL STORE
S SIDE OF HWY IL 9
STA 1026+65.8, 44.4′ RT
ELEV 681.02

BM #TA-7
SET CHSLD ″□″ CENTER OF OF EAST HDWL
UNDER HWY IL 94
SE QUAD WITH CLAREMONT DRIVE
STA 1174+52.59, 27.8′ LT
ELEV 670.57

ALIGNMENT COORDINATES - IL 94			
	STATION	N	E
POT	1175+46.98	1,428,010.704	2,069,969.604
POT	1183+02.98	1,427,254.747	2,069,961.215

ALIGNMENT COORDINATES - CURVE A			
	STATION	N	E
PC	101+68.60	1,427,817.712	2,069,967.462
PI	107+31.60	1,427,254.747	2,069,961.215
PT	110+76.89	1,427,217.860	2,069,399.424

ALIGNMENT COORDINATES - IL 9 / IL 94			
	STATION	N	E
POT	996+42.78	1,427,089.547	2,067,445.200
PC	1027+27.21	1,427,291.633	2,070,523.005
PI	1031+81.81	1,427,321.418	2,070,976.628
PT	1036+36.40	1,427,356.483	2,071,429.874
PC	1047+57.28	1,427,442.940	2,072,547.415
PI	1049+58.63	1,427,458.471	2,072,748.165
PT	1051+59.65	1,427,454.104	2,072,949.468

ALIGNMENT COORDINATES - WILLOW DRIVE			
	STATION	N	E
POT	20+00.00	1,428,418.943	2,069,974.134
POT	20+78.41	1,428,411.060	2,070,052.143

ALIGNMENT COORDINATES - CLARMONT DRIVE			
	STATION	N	E
POT	10+00.00	1,428,131.996	2,069,970.950
POT	12+00.00	1,428,125.757	2,070,170.852

ALIGNMENT COORDINATES - CURVE B			
	STATION	N	E
PC	101+68.60	1,427,817.712	2,069,967.462
PI	107+31.60	1,427,254.747	2,069,961.215
PT	110+27.61	1,427,291.633	2,070,523.005

ALIGNMENT COORDINATES - G STREET			
	STATION	N	E
POT	8+65.97	1,427,190.693	2,070,998.600
POT	10+00.00	1,427,324.647	2,071,003.160

ALIGNMENT COORDINATES - PARK LANE			
	STATION	N	E
POT	10+00.00	1,427,324.948	2,071,007.346
POT	11+14.23	1,427,439.122	2,071,010.756

ALIGNMENT COORDINATES - F STREET			
	STATION	N	E
POT	8+93.67	1,427,249.393	2,071,418.945
POT	10+00.00	1,427,355.714	2,071,419.927

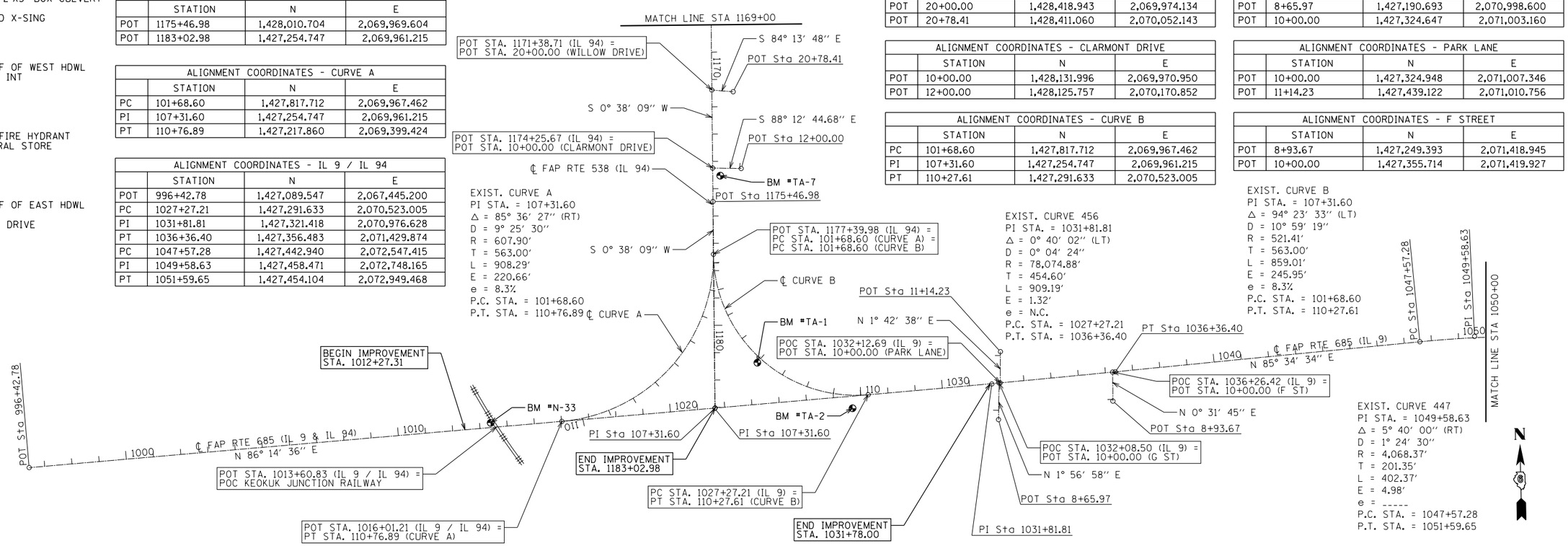

FILE NAME = pw:\\IL084EBIDINTEG.illinois.gov:PWIDOT\Documents\IDOT Offices\District 6\Projects\D672C60\DRAWING\KLINGNER\District edit\CADD SHEETS\72C60-sht-Align02.dgn	USER NAME = sparksgw	DESIGNED -	REVISED -
	PLOT SCALE = 400.0000 ′ / in.	CHECKED -	REVISED -
	PLOT DATE = 10/23/2014	DATE -	REVISED -

STATE OF ILLINOIS
DEPARTMENT OF TRANSPORTATION

HORIZONTAL ALIGNMENT

SCALE: 1″=200′ | SHEET NO. 2 OF 2 SHEETS | STA. 1108+00.00 TO STA. 1183+02.98

F.A.P RTE.	SECTION	COUNTY	TOTAL SHEETS	SHEET NO.
685/538	(112)RS-3, L, N, I	HANCOCK	156	32

CONTRACT NO. 72C60

FED. ROAD DIST. NO. 6 | ILLINOIS | FED. AID PROJECT

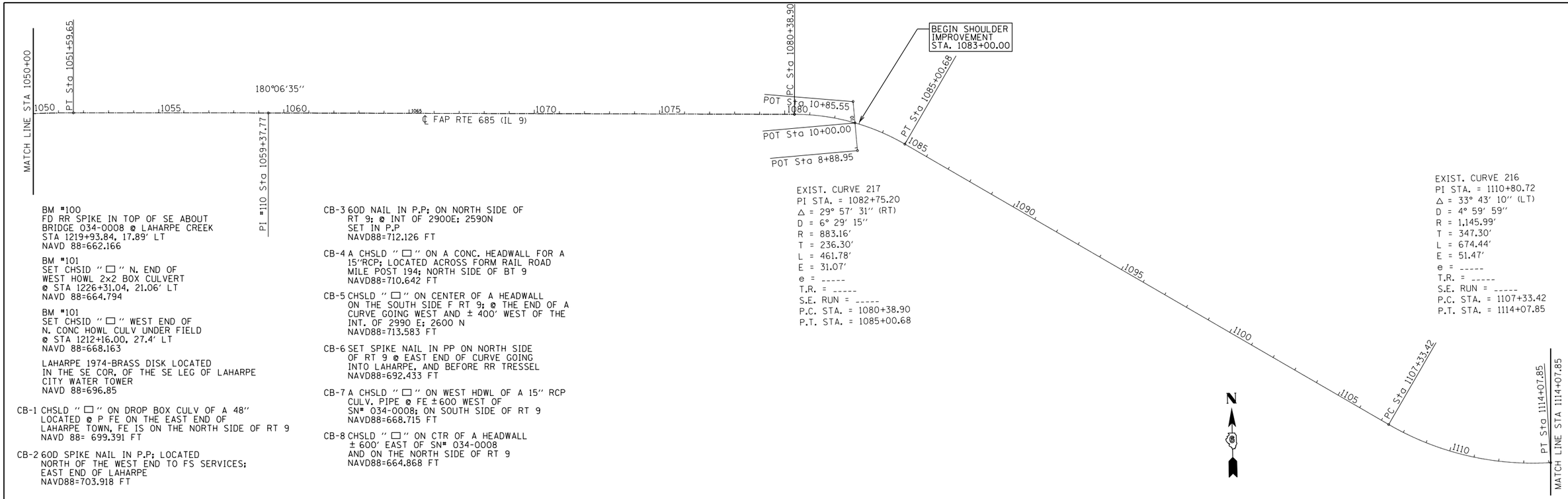

BM #100
FD RR SPIKE IN TOP OF SE ABOUT
BRIDGE 034-0008 @ LAHARPE CREEK
STA 1219+93.84, 17.89' LT
NAVD 88=662.166

BM #101
SET CHSID "□" N. END OF
WEST HOWL 2x2 BOX CULVERT
@ STA 1226+31.04, 21.06' LT
NAVD 88=664.794

BM #101
SET CHSID "□" WEST END OF
N. CONC HOWL CULV UNDER FIELD
@ STA 1212+16.00, 27.4' LT
NAVD 88=668.163

LAHARPE 1974-BRASS DISK LOCATED
IN THE SE COR, OF THE SE LEG OF LAHARPE
CITY WATER TOWER
NAVD 88=696.85

CB-1 CHSLD "□" ON DROP BOX CULV OF A 48"
LOCATED @ P FE ON THE EAST END OF
LAHARPE TOWN, FE IS ON THE NORTH SIDE OF RT 9
NAVD 88= 699.391 FT

CB-2 60D SPIKE NAIL IN P.P; LOCATED
NORTH OF THE WEST END TO FS SERVICES;
EAST END OF LAHARPE
NAVD88=703.918 FT

CB-3 60D NAIL IN P.P; ON NORTH SIDE OF
RT 9; @ INT OF 2900E; 2590N
SET IN P.P
NAVD88=712.126 FT

CB-4 A CHSLD "□" ON A CONC. HEADWALL FOR A
15"RCP; LOCATED ACROSS FORM RAIL ROAD
MILE POST 194; NORTH SIDE OF BT 9
NAVD88=710.642 FT

CB-5 CHSLD "□" ON CENTER OF A HEADWALL
ON THE SOUTH SIDE F RT 9; @ THE END OF A
CURVE GOING WEST AND ± 400' WEST OF THE
INT. OF 2990 E; 2600 N
NAVD88=713.583 FT

CB-6 SET SPIKE NAIL IN PP ON NORTH SIDE
OF RT 9 @ EAST END OF CURVE GOING
INTO LAHARPE, AND BEFORE RR TRESSEL
NAVD88=692.433 FT

CB-7 A CHSLD "□" ON WEST HDWL OF A 15" RCP
CULV. PIPE @ FE ±600 WEST OF
SN# 034-0008; ON SOUTH SIDE OF RT 9
NAVD88=668.715 FT

CB-8 CHSLD "□" ON CTR OF A HEADWALL
± 600' EAST OF SN# 034-0008
AND ON THE NORTH SIDE OF RT 9
NAVD88=664.868 FT

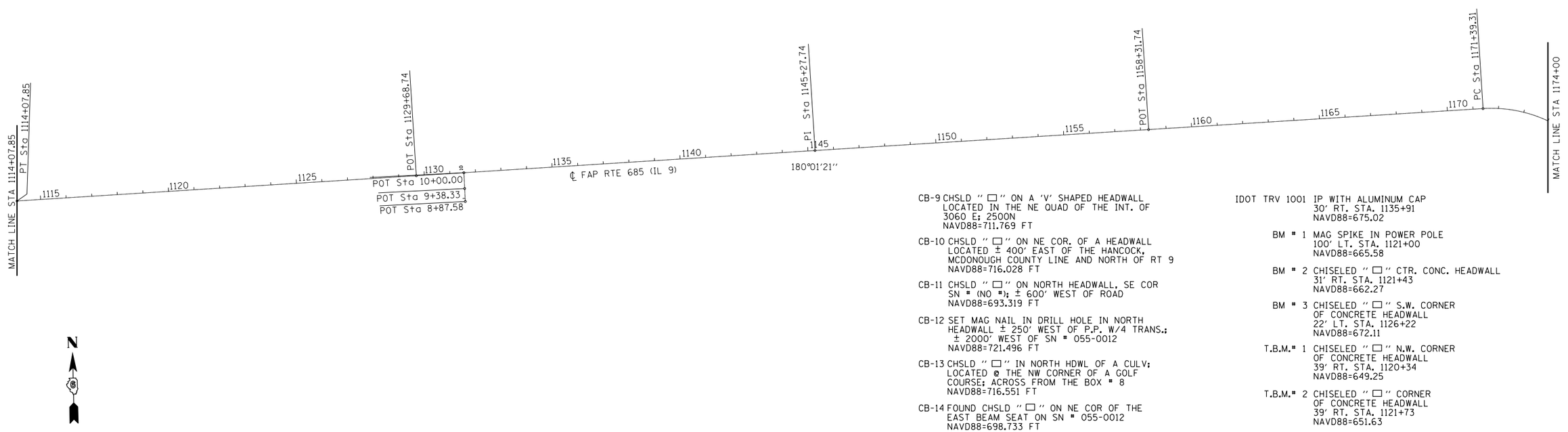

CB-9 CHSLD "□" ON A 'V' SHAPED HEADWALL
LOCATED IN THE NE QUAD OF THE INT. OF
3060 E; 2500N
NAVD88=711.769 FT

CB-10 CHSLD "□" ON NE COR. OF A HEADWALL
LOCATED ± 400' EAST OF THE HANCOCK,
MCDONOUGH COUNTY LINE AND NORTH OF RT 9
NAVD88=716.028 FT

CB-11 CHSLD "□" ON NORTH HEADWALL, SE COR
SN # (NO #); ± 600' WEST OF ROAD
NAVD88=693.319 FT

CB-12 SET MAG NAIL IN DRILL HOLE IN NORTH
HEADWALL ± 250' WEST OF P.P. W/4 TRANS.;
± 2000' WEST OF SN # 055-0012
NAVD88=721.496 FT

CB-13 CHSLD "□" IN NORTH HDWL OF A CULV;
LOCATED @ THE NW CORNER OF A GOLF
COURSE; ACROSS FROM THE BOX # 8
NAVD88=716.551 FT

CB-14 FOUND CHSLD "□" ON NE COR OF THE
EAST BEAM SEAT ON SN # 055-0012
NAVD88=698.733 FT

IDOT TRV 1001 IP WITH ALUMINUM CAP
30' RT. STA. 1135+91
NAVD88=675.02

BM # 1 MAG SPIKE IN POWER POLE
100' LT. STA. 1121+00
NAVD88=665.58

BM # 2 CHISELED "□" CTR. CONC. HEADWALL
31' RT. STA. 1121+43
NAVD88=662.27

BM # 3 CHISELED "□" S.W. CORNER
OF CONCRETE HEADWALL
22' LT. STA. 1126+22
NAVD88=672.11

T.B.M.# 1 CHISELED "□" N.W. CORNER
OF CONCRETE HEADWALL
39' RT. STA. 1120+34
NAVD88=649.25

T.B.M.# 2 CHISELED "□" CORNER
OF CONCRETE HEADWALL
39' RT. STA. 1121+73
NAVD88=651.63

FILE NAME = pw:\\IL084EBIDINTEG.illinois.gov:PWIDOT\Documents\IDOT Offices\District 6\Projects\D672C60\DRAWING\KLINGNER\District edit\CADD SHEETS\72C60-sht-Align02.dgn	USER NAME = sparksgw	DESIGNED -	REVISED -
	PLOT SCALE = 400.0000 ' / in.	CHECKED -	REVISED -
Default	PLOT DATE = 10/23/2014	DATE -	REVISED -

STATE OF ILLINOIS
DEPARTMENT OF TRANSPORTATION

HORIZONTAL ALIGNMENT

SCALE: SHEET OF SHEETS STA. TO STA.

F.A.P. RTE.	SECTION	COUNTY	TOTAL SHEETS	SHEET NO.
685/538	(112)RS-3,L,N,I	HANCOCK	156	33

CONTRACT NO. 72C60

ILLINOIS FED. AID PROJECT

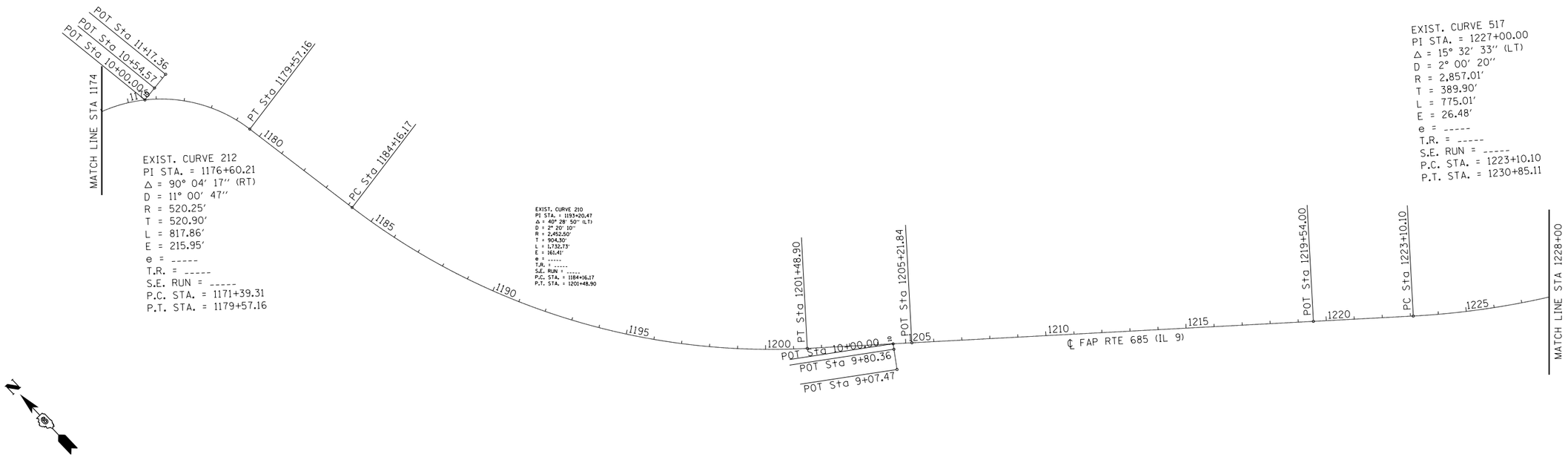

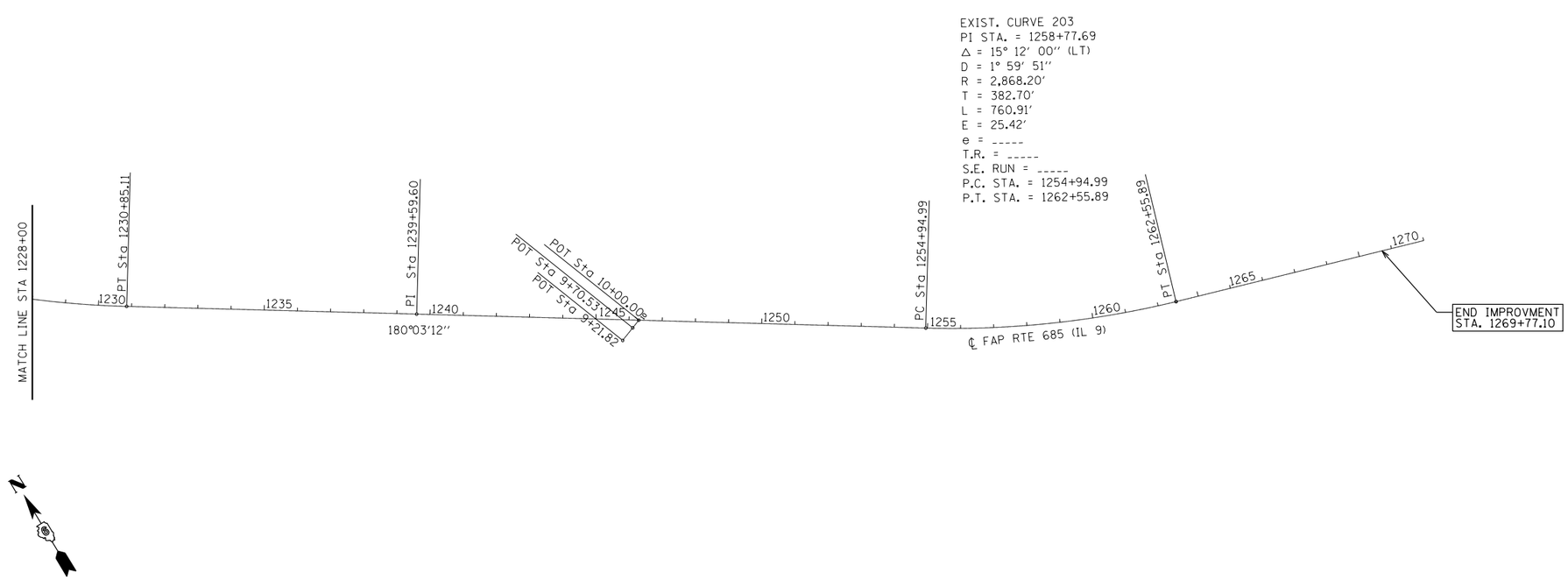

FILE NAME = pw:\\IL084EBIDINTEG.illinois.gov:PWIDOT\Documents\IDOT Offices\District 6\Projects\D672C60\DRAWING Default	USER NAME = sparksgw	DESIGNED -	REVISED -
		CHECKED -	REVISED -
	PLOT SCALE = 400.0000 ′ / in.	DATE -	REVISED -
	PLOT DATE = 10/23/2014		

STATE OF ILLINOIS
DEPARTMENT OF TRANSPORTATION

HORIZONTAL ALIGNMENT

SCALE: | SHEET OF SHEETS | STA. TO STA.

F.A.P. RTE.	SECTION	COUNTY	TOTAL SHEETS	SHEET NO.
685/538	(112)RS-3,L,N,I	HANCOCK	156	34

CONTRACT NO. 72C60

ILLINOIS FED. AID PROJECT

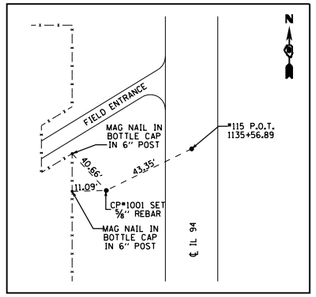

CONTROL POINT #1001
STA 1135+90.76, 30.2' RT
(SET 5/8" REBAR)
N=1,431,967.0128, E=2,069,983.3149

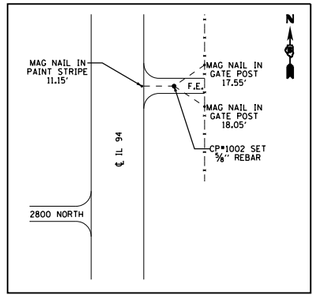

CONTROL POINT #1002
STA 1091+55.55, 23.7' LT
(SET 5/8" REBAR)
N=1,436,401.3621, E=2,070,086.1596

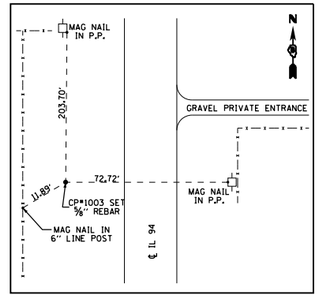

CONTROL POINT #1003
STA 1077+95.28, 33.4' RT
(SET 5/8" REBAR)
N=1,437,762.2676, E=2,070,44.2166

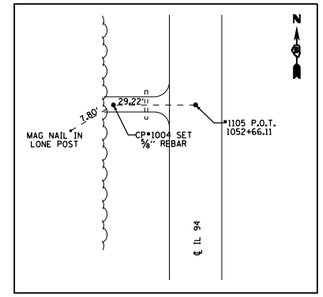

CONTROL POINT #1004
STA 1052+65.31, 29.1' RT
(SET 5/8" REBAR)
N=1,440,291.8690, E=2,070,099.4411

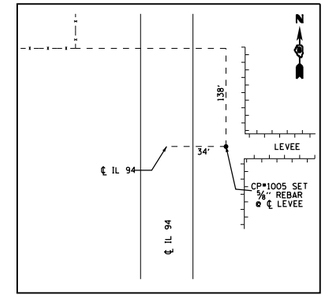

CONTROL POINT #1005
STA 1026+66.07, 32.9' LT
(SET 5/8" REBAR)
N=1,442,889.2263, E=2,070,216.0902

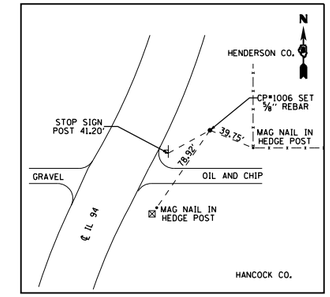

CONTROL POINT #1006
STA 987+32.38, 78.4' LT
(SET 5/8" REBAR)
N=1,446,801.7618, E=2,070,442.7393

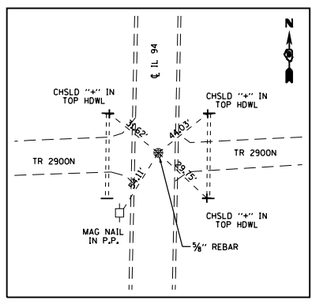

SE COR SEC 5
STA 1040+70.49, 2.00' LT
(SET 5/8" REBAR)
N=1,441,485.769 E=2,070,155.648

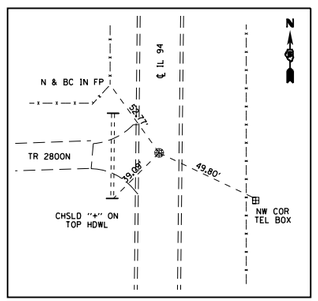

NE COR SEC 17
STA 1094+44.44, 1.11' RT
IRON PLATE
N=1,436,112.756 E=2,070,058.175

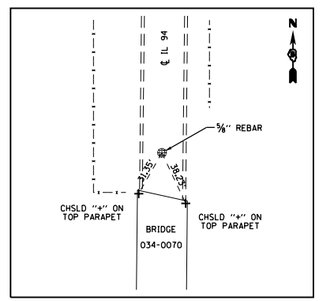

SE COR SEC 17
STA 1147+81.00, 0.81' RT
(SET 5/8" REBAR)
N=1,430,776.522 E=2,069,999.493

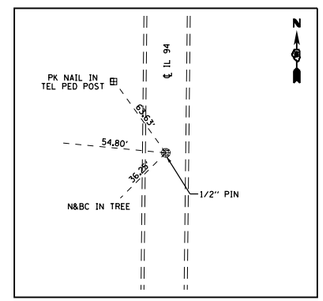

W 1/4 SEC 16
STA 1121+40.91, 1.77' LT
(SET 1/2" PIN)
N=1,433,416.416 E=2,070,031.362

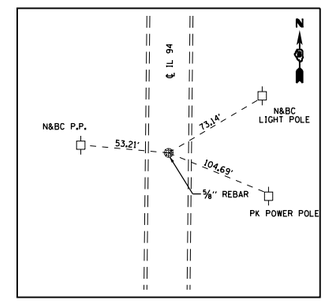

E 1/4 COR SEC 20
STA 1174+72.65, 1.42' LT
(SET 5/8" REBAR)
N=1,428,085.008 E=2,069,971.845

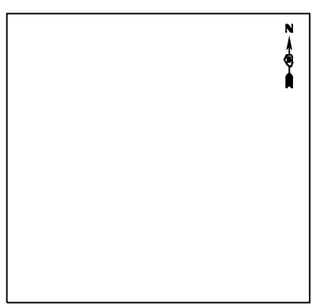

FAP 685 (IL 9)/FAP 538 (IL 94)
POT STA 996+42.78
(NO TIES SET)
N=1,427,089.547, E=2,067,445.200

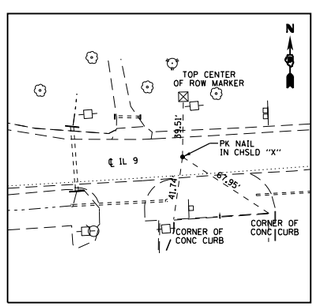

FAP 685 (IL 9)
PC STA 1027+27.21
(PK NAIL IN CHSLD "X")
N=1,427,291.633, E=2,070,523.005

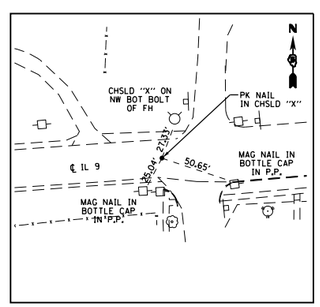

FAP 685 (IL 9)
PI STA 1031+81.81
(PK NAIL IN CHSLD "X")
N=1,427,321.418, E=2,070,976.628

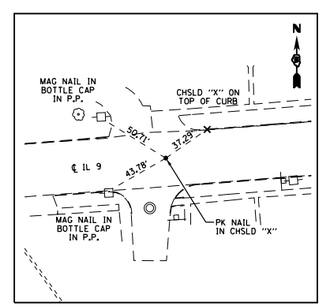

FAP 685 (IL 9)
PT STA 1036+36.40
(PK NAIL IN CHSLD "X")
N=1,427,356.483, E=2,071,429.874

FILE NAME = pw:\\IL084EBIDINTEG.illinois.gov:PWIDOT\Documents\IDOT Offices\District 6\Projects\D6720	USER NAME = sparksgw	DESIGNED -	REVISED -
		DRAWN Data\KLINGNER\District edit\CADD SHEETS\72C60-sht-Ties01.dgn	REVISED
	PLOT SCALE = 100.0000 ' / in.	CHECKED -	REVISED -
	PLOT DATE = 10/23/2014	DATE -	REVISED -

STATE OF ILLINOIS
DEPARTMENT OF TRANSPORTATION

HORIZONTAL CONTROL TIES

SCALE: none | SHEET NO. 1 OF 3 SHEETS | STA. TO STA.

F.A.P RTE.	SECTION	COUNTY	TOTAL SHEETS	SHEET NO.
685/538	(112)RS-3, L, N, I	HANCOCK	156	35
		CONTRACT NO. 72C60		

FED. ROAD DIST. NO. 6 | ILLINOIS | FED. AID PROJECT

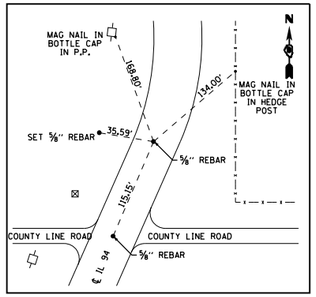

FAP 538 (IL 94)
POT STA 986+61.78
(SET 5/8" REBAR)
N=1,446,884.547, E=2,070,377.412

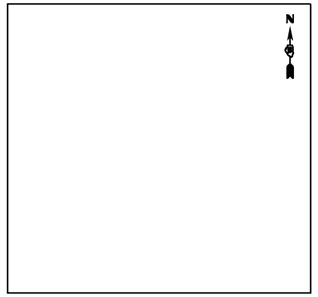

FAP 538 (IL 94)
POT STA 987+83.13
(NO TIES SET)
N=1,446,764.927, E=2,070,356.973

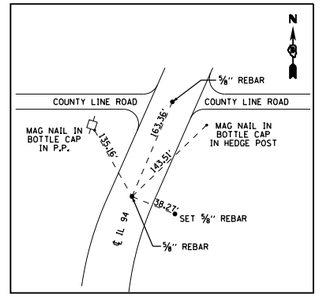

FAP 538 (IL 94)
PC STA 989+40.29
(SET 5/8" REBAR)
N=1,446,610.016, E=2,070,330.504

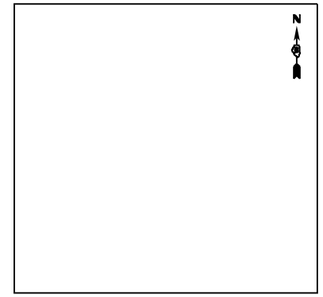

FAP 538 (IL 94)
PI STA 994+07.21
(NO TIES SET)
N=1,446,149.761, E=2,070,251.862

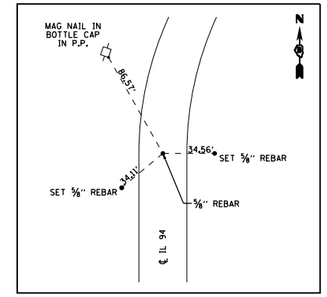

FAP 538 (IL 94)
PT STA 998+72.43
(SET 5/8" REBAR)
N=1,445,682.940, E=2,070,242.032

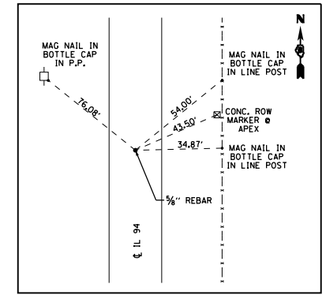

FAP 538 (IL 94)
PC STA 1071+07.64
(SET 5/8" REBAR)
N=1,438,449.334, E=2,070,089.707

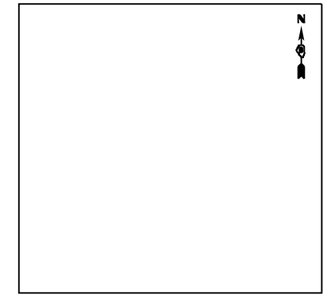

FAP 538 (IL 94)
PI STA 1076+07.64
(NO TIES SET)
N=1,437,949.445, E=2,070,079.180

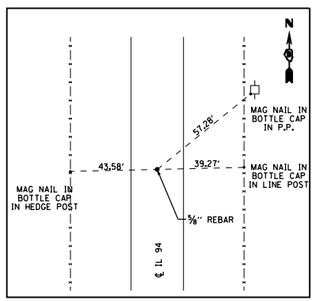

FAP 538 (IL 94)
PT STA 1081+07.63
(SET 5/8" REBAR)
N=1,437,449.474, E=2,070,073.764

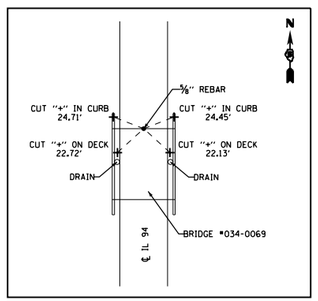

FAP 538 (IL 94)
POT STA 1103+05.36
(SET 5/8" REBAR)
N=1,435,251.878, E=2,070,049.958

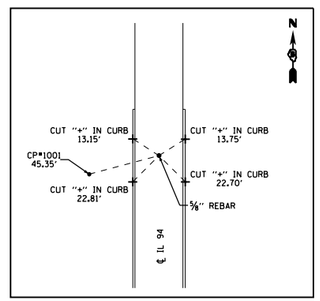

FAP 538 (IL 94)
POT STA 1135+56.89
(SET 5/8" REBAR)
N=1,432,000.543, E=2,070,013.855

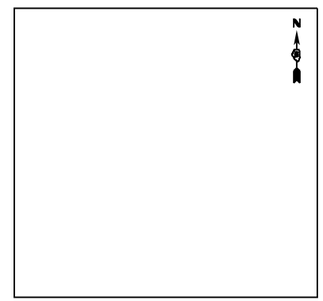

FAP 538 (IL 94)
POT STA 1148+54.00
(NO TIES SET)
N=1,430,703.512, E=2,069,999.487

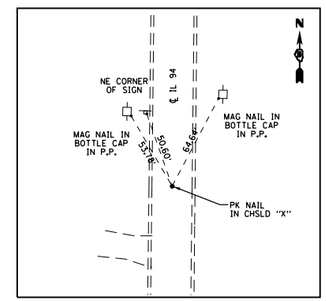

FAP 538 (IL 94)
POT STA 1160+79.00
(PK NAIL IN CHSLD "X")
N=1,429,478.587, E=2,069,985.894

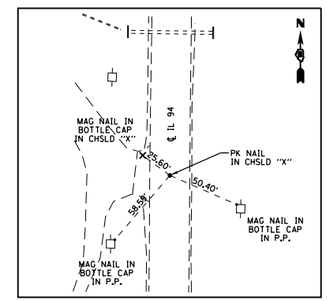

FAP 538 (IL 94)
POT STA 1175+46.98
(PK NAIL IN CHSLD "X")
N=1,428,010.704, E=2,069,969.604

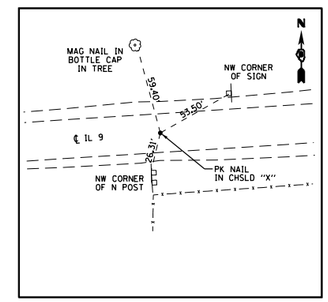

FAP 538 (IL 94)
POT STA 1183+02.98
(PK NAIL IN CHSLD "X")
N=1,427,254.747, E=2,069,961.215

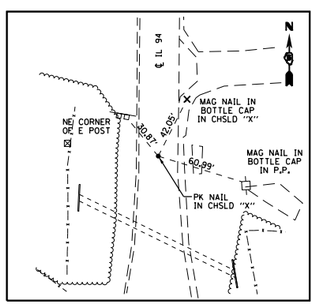

CURVE A
PC STA 101+68.60
(PK NAIL IN CHSLD "X")
N=1,427,817.712, E=2,069,967.462

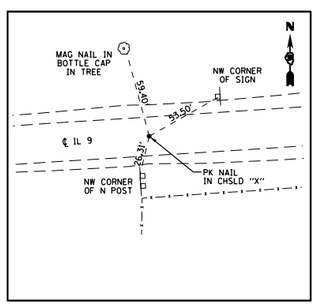

CURVE A
PI STA 107+31.60
(PK NAIL IN CHSLD "X")
N=1,427,254.747, E=2,069,961.215

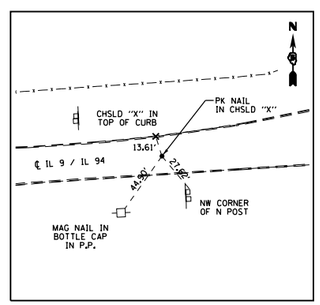

CURVE A
PT STA 110+76.89
(PK NAIL IN CHSLD "X")
N=1,427,217.860, E=2,069,399.424

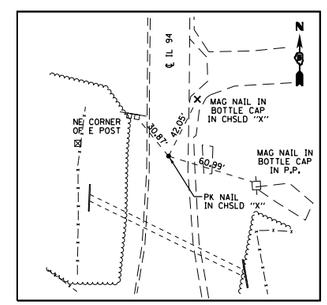

CURVE B
PC STA 101+68.60
(PK NAIL IN CHSLD "X")
N=1,427,817.712, E=2,069,967.462

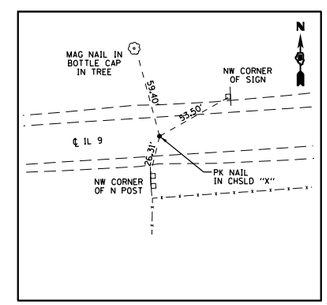

CURVE B
PI STA 107+31.60
(PK NAIL IN CHSLD "X")
N=1,427,254.747, E=2,069,961.215

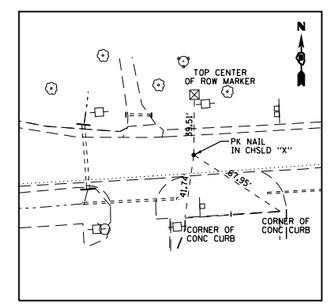

CURVE B
PT STA 110+27.61
(PK NAIL IN CHSLD "X")
N=1,427,291.633, E=2,070,523.005

FILE NAME = pw:\\IL084EBIDINTEG.illinois.gov:PWIDOT\Documents\IDOT Offices\District 6\Projects\D672C60\Data\KLINGNER\District edits\CADD SHEETS\72C60-sht-Ties02.dgn	USER NAME = sparksgw	DESIGNED -	REVISED -
	PLOT SCALE = 100.0000 ' / in.	CHECKED -	REVISED -
	PLOT DATE = 10/23/2014	DATE -	REVISED -

STATE OF ILLINOIS
DEPARTMENT OF TRANSPORTATION

HORIZONTAL CONTROL TIES

SCALE: none | SHEET NO. 2 OF 3 SHEETS | STA. | TO STA.

F.A.P RTE.	SECTION	COUNTY	TOTAL SHEETS	SHEET NO.
685/538	(112)RS-3, L, N, I	HANCOCK	156	36
		CONTRACT NO. 72C60		

FED. ROAD DIST. NO. 6 | ILLINOIS | FED. AID PROJECT

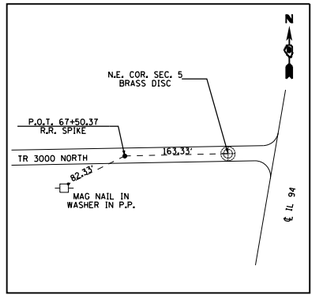

CR 3000E
POT STA 67+50.37
(SET RR SPIKE)
N=1,446,766.547, E=2,070,108.425

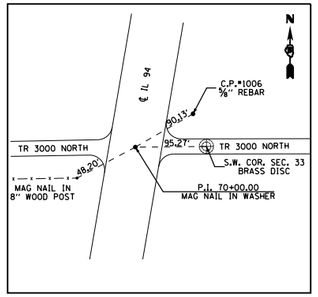

CR 3000E
POT STA 70+00.00
(MAG NAIL IN WASHER)
N=1,446,771.040, E=2,070,358.018

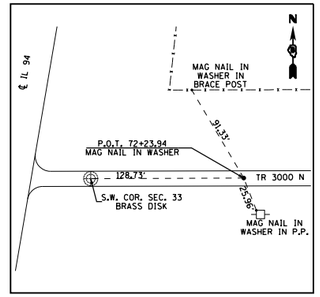

CR 3000E
POT STA 72+23.94
(MAG NAIL IN WASHER)
N=1,446,771.580, E=2,070,581.956

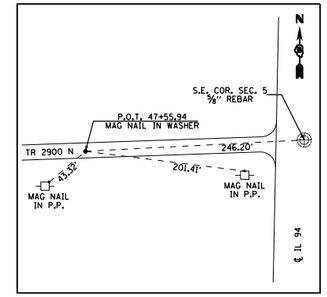

CH 14 / CR 2900E
POT STA 47+55.94
(MAG NAIL IN WASHER)
N=1,441,475.457, E=2,069,909.704

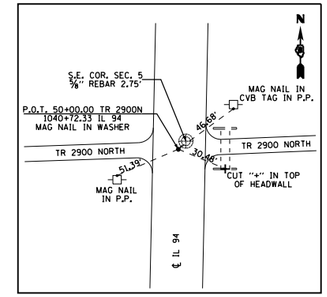

CH 14 / CR 2900E
POT STA 50+00.00
(MAG NAIL IN WASHER)
N=1,441,483.975, E=2,070,153.610

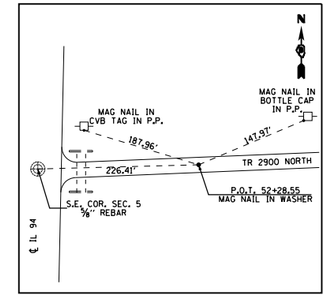

CR 2900E
POT STA 52+28.55
(MAG NAIL IN WASHER)
N=1,441,493.393, E=2,070,381.967

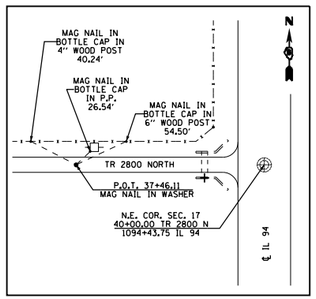

CR 2800E
POT STA 37+46.11
(MAG NAIL IN WASHER)
N=1,436,100.835, E=2,069,805.718

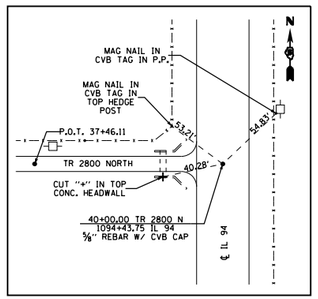

CR 2800E
POT STA 40+00.00
(SET 5/8" REBAR)
N=1,436,113.431, E=2,070,059.293

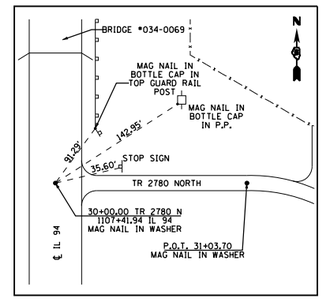

CR 2730N / TERRE HAUTE RD
POT STA 30+00.00
(MAG NAIL IN WASHER)
N=1,434,815.318, E=2,070,045.118

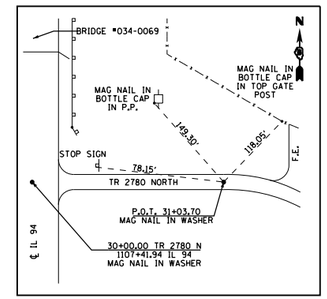

CR 2730N / TERRE HAUTE RD
POT STA 31+03.70
(MAG NAIL IN WASHER)
N=1,434,813.288, E=2,070,148.798

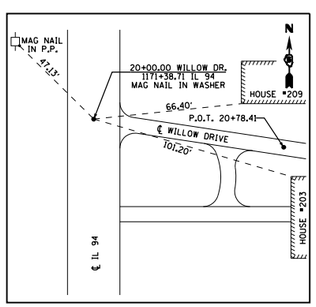

WILLOW DRIVE
POT STA 20+00.00
(MAG NAIL IN WASHER)
N=1,428,418.943, E=2,069,974.134

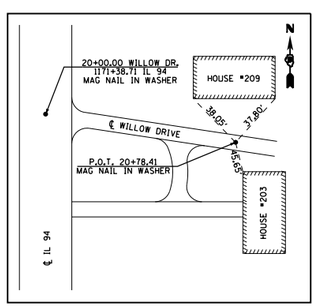

WILLOW DRIVE
POT STA 20+78.41
(MAG NAIL IN WASHER)
N=1,428,411.061, E=2,070,052.143

FILE NAME = pw:\\IL084EBIDINTEG.illinois.gov:PWIDOT\Documents\IDOT Offices\District 6\Projects\D672C60\DRAWING\Data\KLINGNER\District edits\CADD SHEETS\72C60-sht-Ties03.dgn	USER NAME = sparksgw	DESIGNED -	REVISED -
	PLOT SCALE = 100.0000 ' / in.	CHECKED -	REVISED -
	PLOT DATE = 10/23/2014	DATE -	REVISED -

STATE OF ILLINOIS
DEPARTMENT OF TRANSPORTATION

HORIZONTAL CONTROL TIES

SCALE: none | SHEET NO. 3 OF 3 SHEETS | STA. | TO STA.

F.A.P RTE.	SECTION	COUNTY	TOTAL SHEETS	SHEET NO.
685/538	(112)RS-3, L, N, I	HANCOCK	156	37
		CONTRACT NO. 72C60		

FED. ROAD DIST. NO. 6 | ILLINOIS | FED. AID PROJECT

CURVE A – STAGE 1a
SPECIAL DITCH DETAIL

STAGE 1a CONSTRUCTION SEQUENCE

1. REMOVE TOP 12" OF TOPSOIL FROM THE EXISTING INFIELD AREA WITHIN THE PROPOSED CONSTRUCTION LIMITS.
2. GRADE SPECIAL DITCH RT ON CURVE A FROM STATION 103+50 TO STATION 104+05.
3. GRADE SPECIAL DITCH RT ON IL 94 FROM STATION 1180+25 TO STATION 1182+50.
4. CONSTRUCT TEMPORAY PIPE CULVERT AND PAVEMENT PATCHING UTILIZING TRAFFIC CONTROL AND PROTECTION STANDARD 701501.
5. CONSTRUCT SUBBASE GRANULAR MATERIAL, TYPE A AND HOT-MIX ASPHALT BASE COURSE UP TO THE EDGE OF THE EXISITNG PAVEMENT AS SHOWN.
6. CONSTRUCT TEMPORARY AGGREGATE BASE COURSE, TYPE B 12" TO BE UTILIZED IN STAGE 1B AS SHOWN.

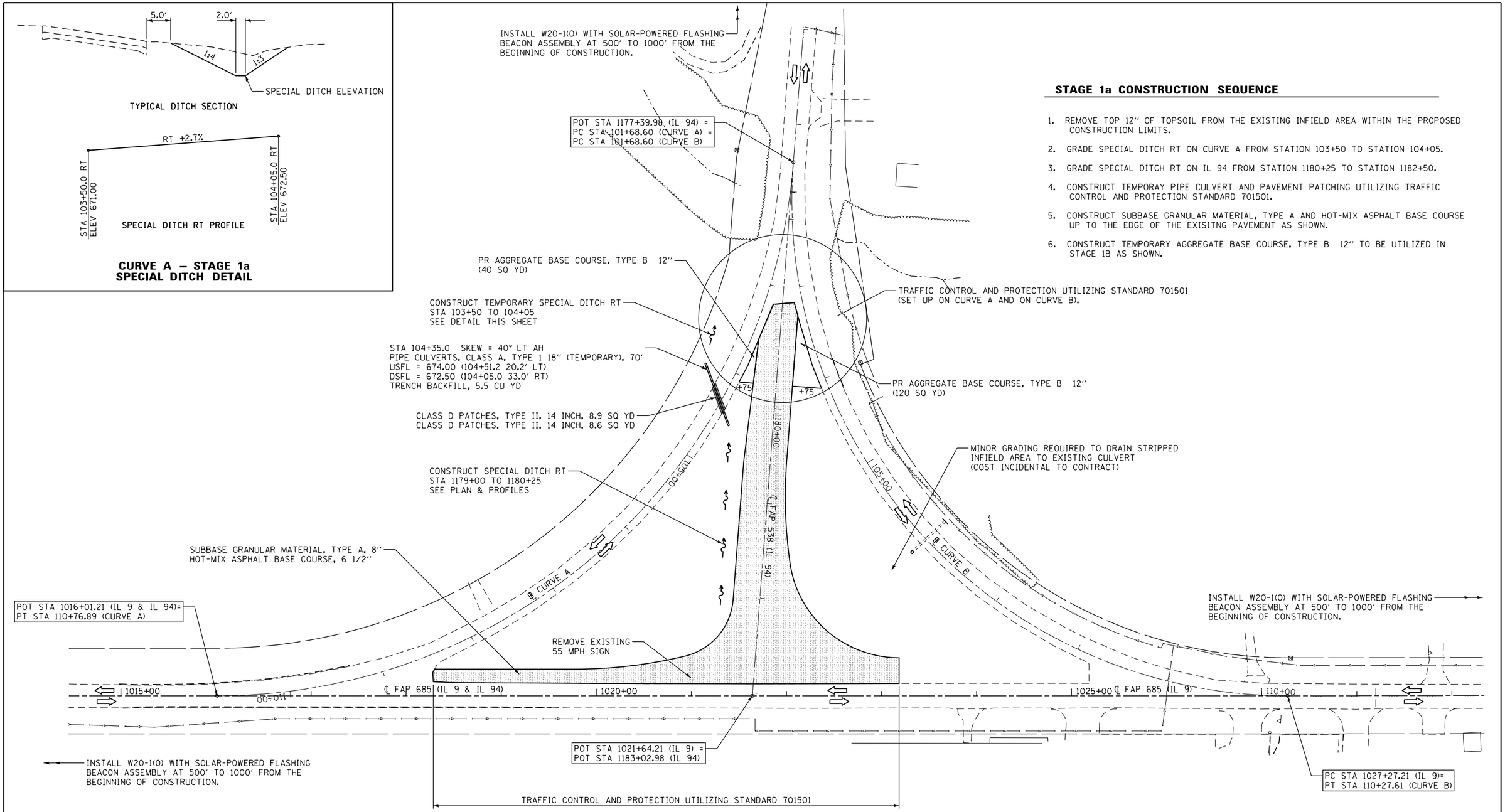

FILE NAME = pw:\\IL084EBIDINTEG.illinois.gov:PWIDOT\Documents\IDOT Offices\District 6\Projects\D672C60\DRAWINGS\	USER NAME = sparksgw	DESIGNED -	REVISED -
		DRAWN -	REVISED -
	PLOT SCALE = 100.0000 ' / in.	CHECKED -	REVISED -
	PLOT DATE = 10/23/2014	DATE -	REVISED -

STATE OF ILLINOIS
DEPARTMENT OF TRANSPORTATION

STAGING AND TRAFFIC CONTROL
STAGE 1a

SCALE: 1"=50' | SHEET NO. 1 OF 3 SHEETS | STA. TO STA.

F.A.P RTE.	SECTION	COUNTY	TOTAL SHEETS	SHEET NO.
685/538	(112)RS-3, L, N, I	HANCOCK	156	38
		CONTRACT NO. 72C60		

FED. ROAD DIST. NO. 6 | ILLINOIS | FED. AID PROJECT

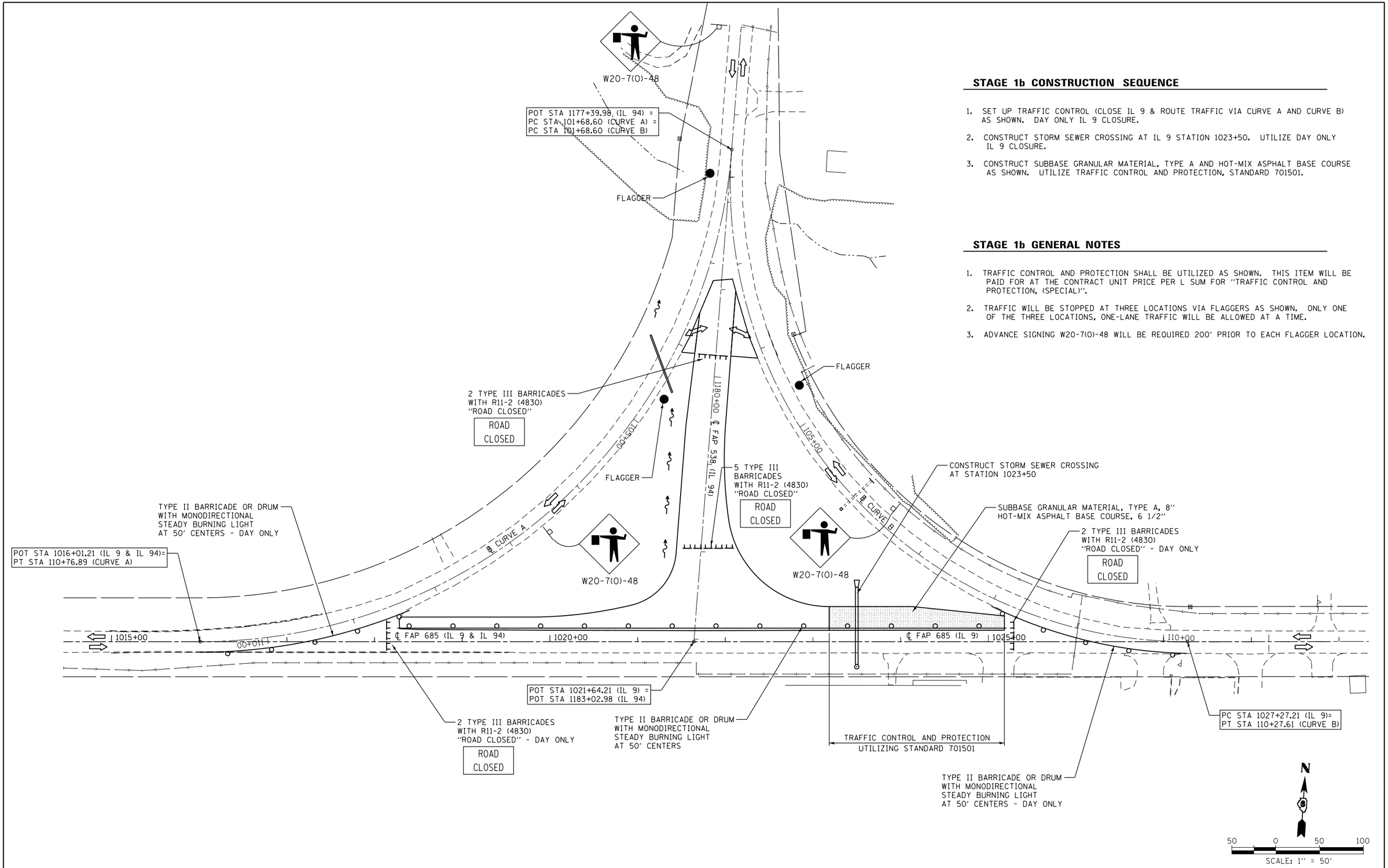

STAGE 1b CONSTRUCTION SEQUENCE

1. SET UP TRAFFIC CONTROL (CLOSE IL 9 & ROUTE TRAFFIC VIA CURVE A AND CURVE B) AS SHOWN. DAY ONLY IL 9 CLOSURE.
2. CONSTRUCT STORM SEWER CROSSING AT IL 9 STATION 1023+50. UTILIZE DAY ONLY IL 9 CLOSURE.
3. CONSTRUCT SUBBASE GRANULAR MATERIAL, TYPE A AND HOT-MIX ASPHALT BASE COURSE AS SHOWN. UTILIZE TRAFFIC CONTROL AND PROTECTION, STANDARD 701501.

STAGE 1b GENERAL NOTES

1. TRAFFIC CONTROL AND PROTECTION SHALL BE UTILIZED AS SHOWN. THIS ITEM WILL BE PAID FOR AT THE CONTRACT UNIT PRICE PER L SUM FOR "TRAFFIC CONTROL AND PROTECTION, (SPECIAL)".
2. TRAFFIC WILL BE STOPPED AT THREE LOCATIONS VIA FLAGGERS AS SHOWN. ONLY ONE OF THE THREE LOCATIONS, ONE-LANE TRAFFIC WILL BE ALLOWED AT A TIME.
3. ADVANCE SIGNING W20-7(0)-48 WILL BE REQUIRED 200' PRIOR TO EACH FLAGGER LOCATION.

FILE NAME = pw:\\IL084EBIDINTEG.illinois.gov:PWIDOT\Documents\IDOT Offices\District 6\Projects\D672C60\DRAWING	USER NAME = sparksgw	DESIGNED -	REVISED -
		CHECKED -	REVISED -
	PLOT SCALE = 100.0000 ' / in.	DATE -	REVISED -
	PLOT DATE = 10/23/2014		

STATE OF ILLINOIS
DEPARTMENT OF TRANSPORTATION

STAGING AND TRAFFIC CONTROL
STAGE 1b

SCALE: 1"=50' | SHEET NO. 2 OF 3 SHEETS | STA. TO STA.

F.A.P RTE.	SECTION	COUNTY	TOTAL SHEETS	SHEET NO.
685/538	(112)RS-3, L, N, I	HANCOCK	156	39
		CONTRACT NO. 72C60		

FED. ROAD DIST. NO. 6 | ILLINOIS | FED. AID PROJECT

STAGE 2 CONSTRUCTION SEQUENCE

1. SET UP TRAFFIC CONTROL AND SWITCH TRAFFIC ONTO STAGE 1 HOT-MIX ASPHALT BASE COURSE.
2. CONSTRUCT REMAINDER OF HOT-MIX ASPHALT BASE COURSE AND PAVEMENT REMOVAL (INCLUDING TEMPORARY AGGREGATE BASE COURSE, TYPE B, 12" REMOVAL). UTILIZE TRAFFIC CONTROL AND PROTECTION STANDARDS REQUIRED, PER POSTED SPEED.
3. CONSTRUCT HOT-MIX ASPHALT BINDER COURSE, LEVELING BINDER, AND SURFACE UNDER TRAFFIC UTILIZING TRAFFIC CONTROL AND PROTECTION STANDARDS REQUIRED, PER POSTED SPEED.

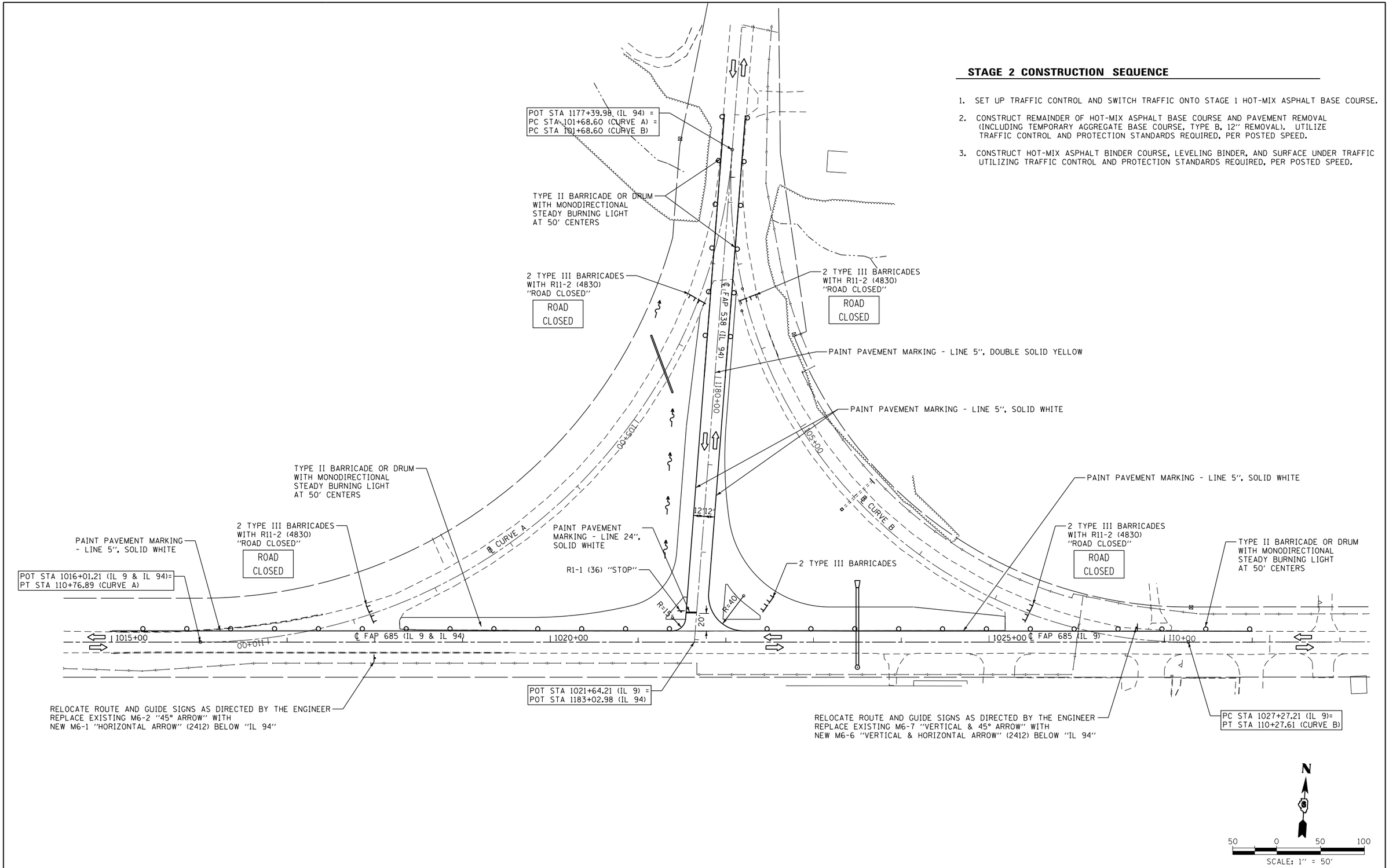

FILE NAME =	USER NAME = sparksgw	DESIGNED -	REVISED -
pw:\\IL084EBIDINTEG.illinois.gov:PWIDOT\Documents\IDOT Offices\District 6\Projects\D672C60\DRAWINGs\KLINGNER\District edit\CADD Files\72C60-sht-Staging02.dgn		DRAWN	REVISED -
	PLOT SCALE = 100.0000 ' / in.	CHECKED -	REVISED -
	PLOT DATE = 10/23/2014	DATE -	REVISED -

STATE OF ILLINOIS
DEPARTMENT OF TRANSPORTATION

STAGING AND TRAFFIC CONTROL
STAGE 2

SCALE: 1"=50' | SHEET NO. 3 OF 3 SHEETS | STA. | TO STA.

F.A.P RTE.	SECTION	COUNTY	TOTAL SHEETS	SHEET NO.
685/538	(112)RS-3, L, N, I	HANCOCK	156	40
		CONTRACT NO. 72C60		

FED. ROAD DIST. NO. 6 | ILLINOIS | FED. AID PROJECT

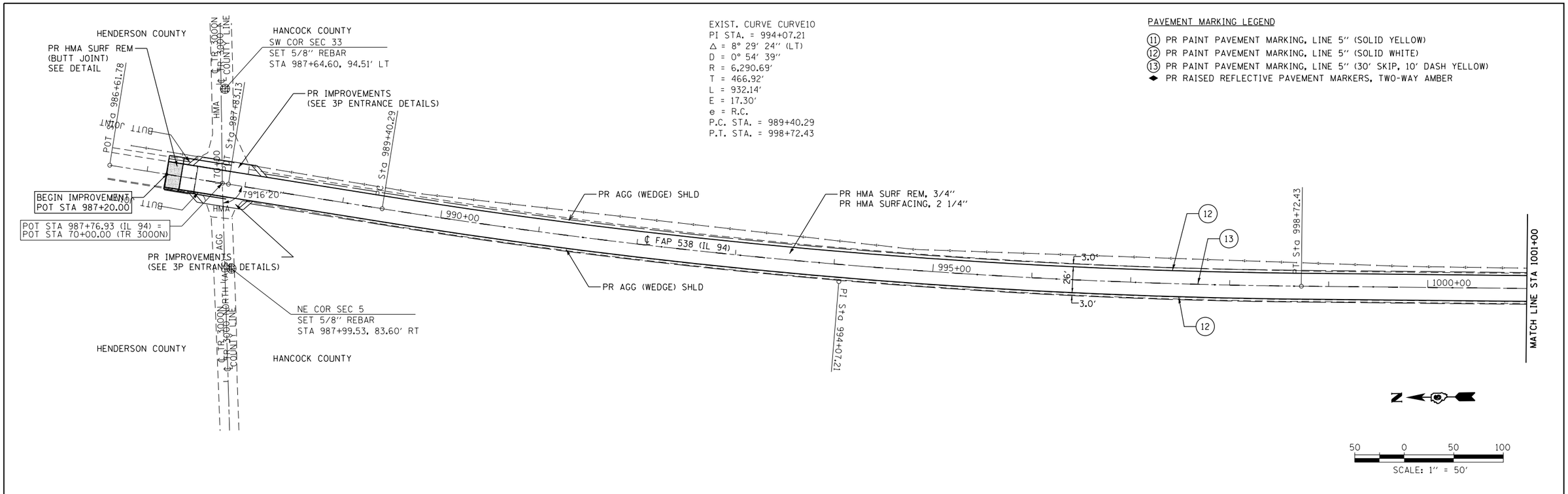

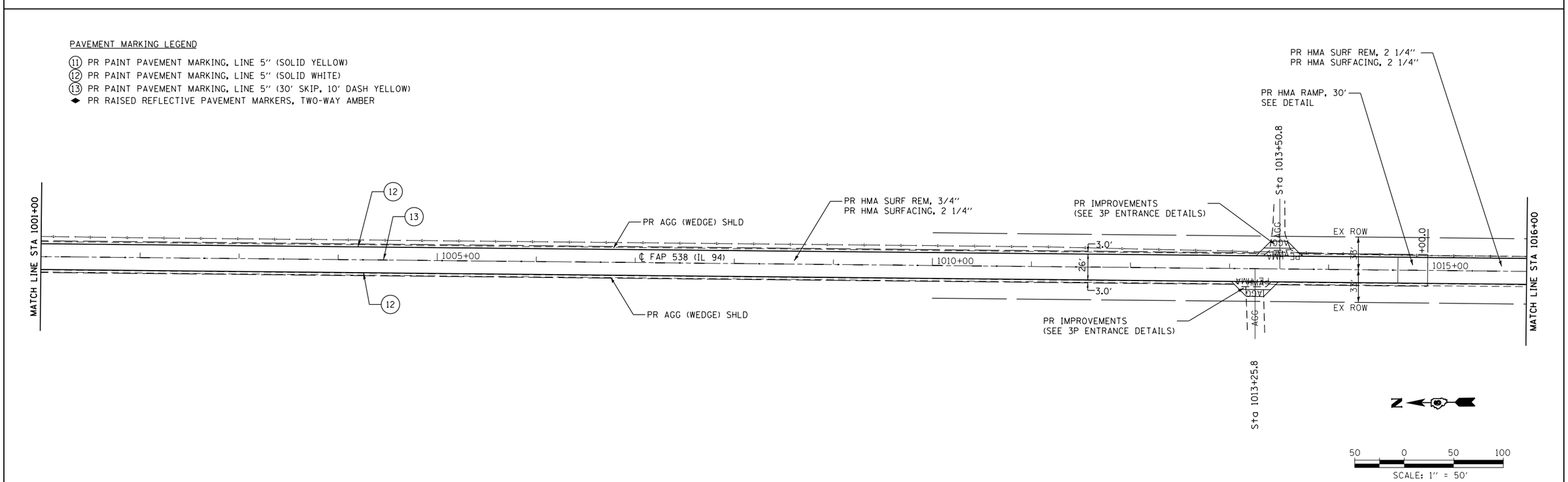

FILE NAME = pw:\\IL084EBIDINTEG.illinois.gov:PWIDOT\Documents\IDOT Offices\District 6\Projects\D672C60\Plan Data\KLINGNER\District edit\CADD SHEETS\72C60-sht-Plan01_IL 94.dgn	USER NAME = sparksgw	DESIGNED -	REVISED -	STATE OF ILLINOIS DEPARTMENT OF TRANSPORTATION	PLAN SHEET FAP RTE 538 (IL 94)	F.A.P RTE.	SECTION	COUNTY	TOTAL SHEETS	SHEET NO.
		DRAWN -	REVISED -			685/538	(112)RS-3, L, N, I	HANCOCK	156	41
	PLOT SCALE = 100.0000 ' / in.	CHECKED -	REVISED -					CONTRACT NO. 72C60		
	PLOT DATE = 10/23/2014	DATE -	REVISED -		SCALE: 1"=50' / SHEET NO. 1 OF 16 SHEETS / STA. 986+00 TO STA. 1016+00	FED. ROAD DIST. NO. 6	ILLINOIS	FED. AID PROJECT		

PAVEMENT MARKING LEGEND

(11) PR PAINT PAVEMENT MARKING, LINE 5" (SOLID YELLOW)
(12) PR PAINT PAVEMENT MARKING, LINE 5" (SOLID WHITE)
(13) PR PAINT PAVEMENT MARKING, LINE 5" (30' SKIP, 10' DASH YELLOW)
◆ PR RAISED REFLECTIVE PAVEMENT MARKERS, TWO-WAY AMBER

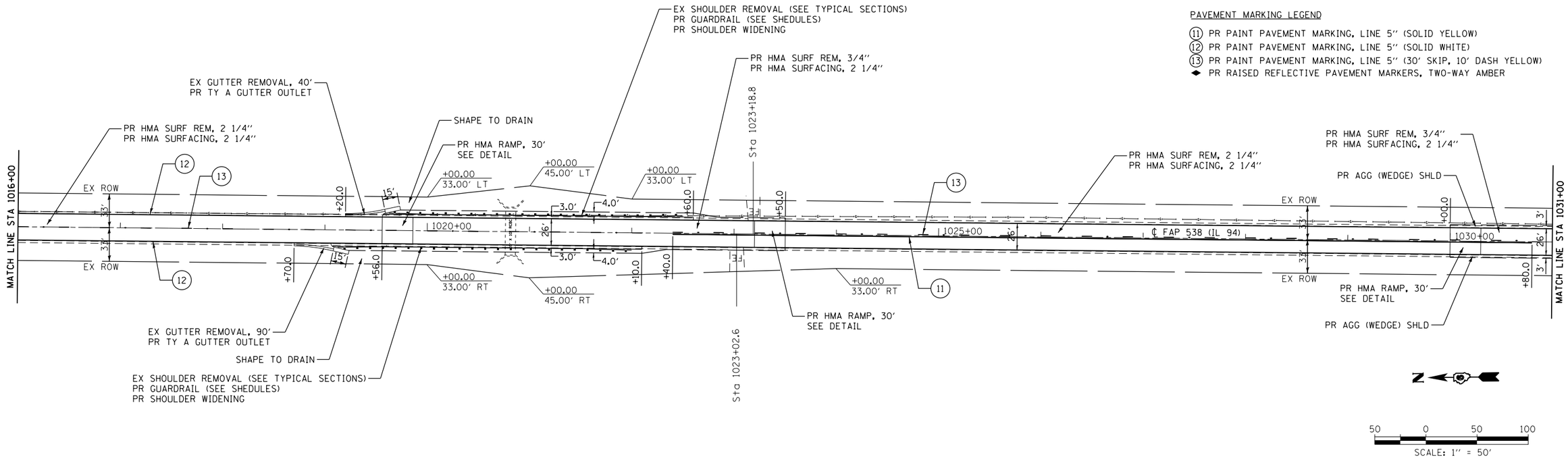

PAVEMENT MARKING LEGEND

(11) PR PAINT PAVEMENT MARKING, LINE 5" (SOLID YELLOW)
(12) PR PAINT PAVEMENT MARKING, LINE 5" (SOLID WHITE)
(13) PR PAINT PAVEMENT MARKING, LINE 5" (30' SKIP, 10' DASH YELLOW)
◆ PR RAISED REFLECTIVE PAVEMENT MARKERS, TWO-WAY AMBER

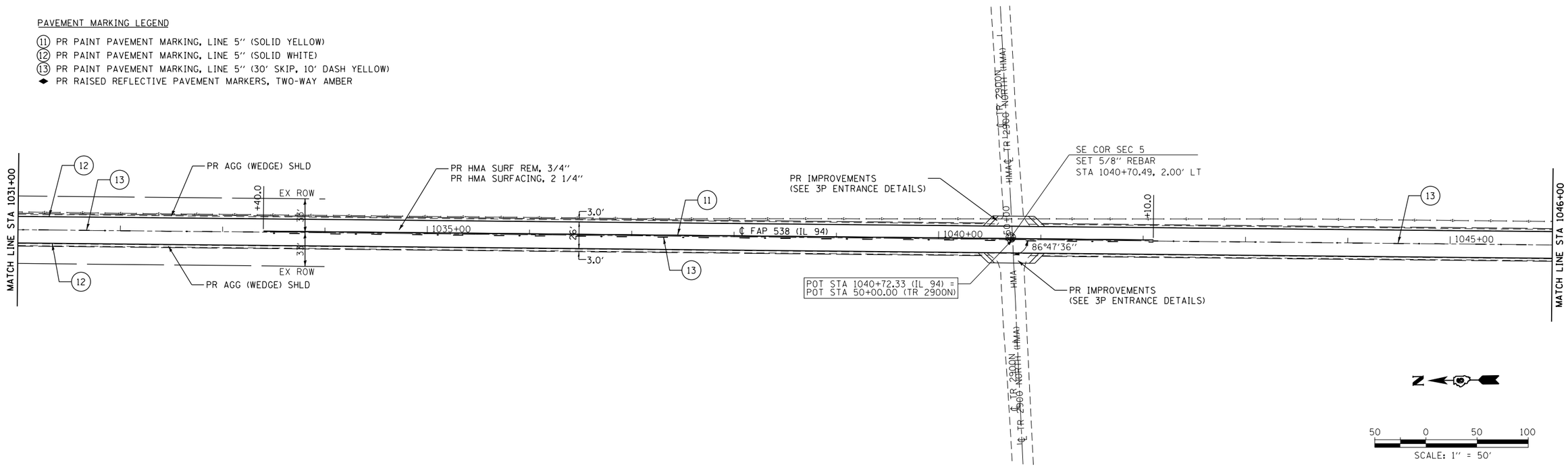

FILE NAME = pw:\\IL084EBIDINTEG.illinois.gov:PWIDOT\Documents\IDOT Offices\District 6\Projects\D672C60\DRAWINGS\Data\KLINGNER\District edit\CADD SHEETS\72C60-sht-Plan02_IL 94.dgn	USER NAME = sparksgw	DESIGNED -	REVISED -
		DRAWN -	REVISED -
	PLOT SCALE = 100.0000 ' / in.	CHECKED -	REVISED -
	PLOT DATE = 10/23/2014	DATE -	REVISED -

STATE OF ILLINOIS
DEPARTMENT OF TRANSPORTATION

PLAN SHEET
FAP RTE 538 (IL 94)

SCALE: 1"=50' | SHEET NO. 2 OF 16 SHEETS | STA. 1016+00 TO STA. 1046+00

F.A.P RTE.	SECTION	COUNTY	TOTAL SHEETS	SHEET NO.
685/538	(112)RS-3, L, N, I	HANCOCK	156	42
		CONTRACT NO. 72C60		

FED. ROAD DIST. NO. 6 | ILLINOIS | FED. AID PROJECT

PAVEMENT MARKING LEGEND

(11) PR PAINT PAVEMENT MARKING, LINE 5" (SOLID YELLOW)
(12) PR PAINT PAVEMENT MARKING, LINE 5" (SOLID WHITE)
(13) PR PAINT PAVEMENT MARKING, LINE 5" (30' SKIP, 10' DASH YELLOW)
◆ PR RAISED REFLECTIVE PAVEMENT MARKERS, TWO-WAY AMBER

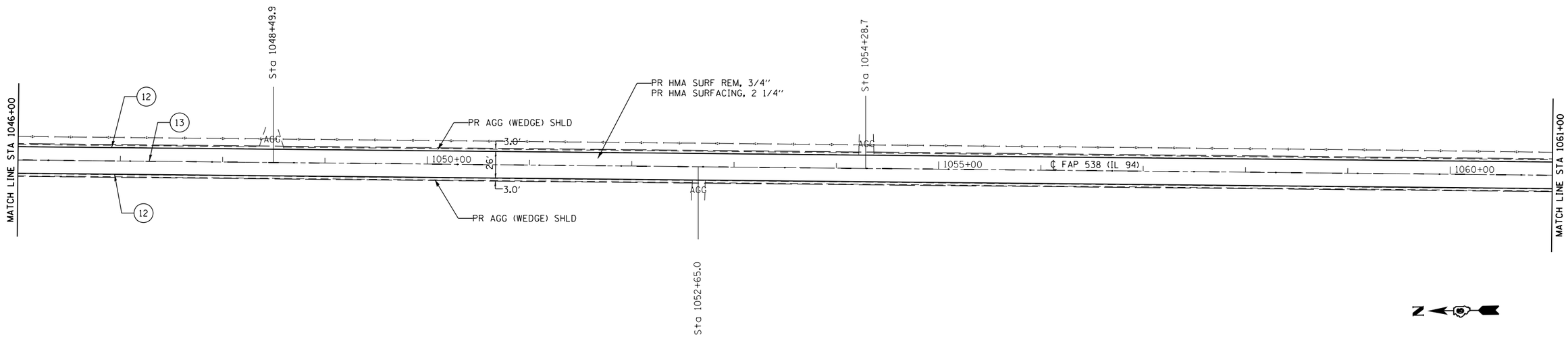

50 0 50 100
SCALE: 1" = 50'

PAVEMENT MARKING LEGEND

(11) PR PAINT PAVEMENT MARKING, LINE 5" (SOLID YELLOW)
(12) PR PAINT PAVEMENT MARKING, LINE 5" (SOLID WHITE)
(13) PR PAINT PAVEMENT MARKING, LINE 5" (30' SKIP, 10' DASH YELLOW)
◆ PR RAISED REFLECTIVE PAVEMENT MARKERS, TWO-WAY AMBER

EXIST. CURVE CURVE11
PI STA. = 1076+07.64
Δ = 0° 35' 08" (LT)
D = 0° 03' 31"
R = 97,859.65'
T = 500.00'
L = 999.99'
E = 1.28'
e = N.C.
P.C. STA. = 1071+07.64
P.T. STA. = 1081+07.63

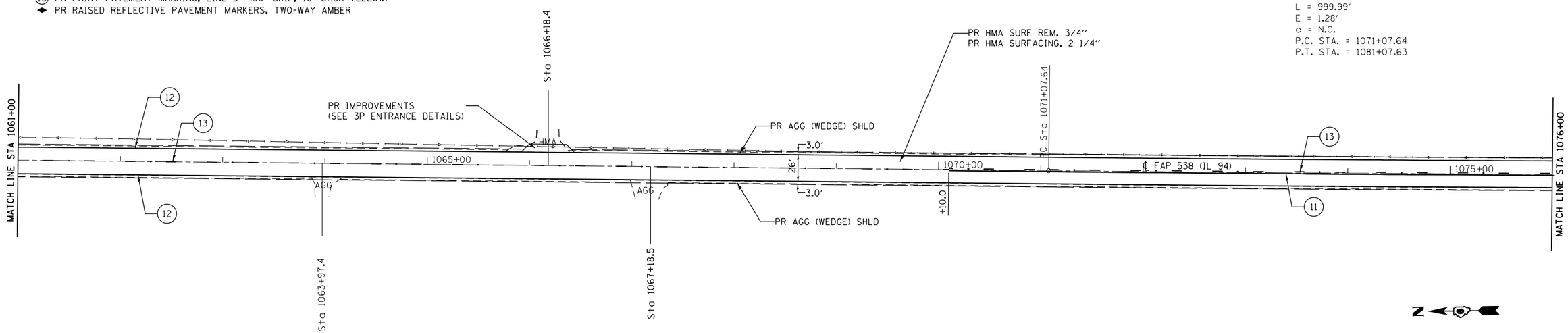

50 0 50 100
SCALE: 1" = 50'

FILE NAME = pw:\\IL084EBIDINTEG.illinois.gov:PWIDOT\Documents\IDOT Offices\District 6\Projects\D672C60\Data\KLINGNER\District edit\CADD SHEETS\72C60-sht-Plan03_IL 94.dgn	USER NAME = sparksgw	DESIGNED -	REVISED -
		DRAWN -	REVISED -
	PLOT SCALE = 100.0000 ' / in.	CHECKED -	REVISED -
	PLOT DATE = 10/23/2014	DATE -	REVISED -

STATE OF ILLINOIS
DEPARTMENT OF TRANSPORTATION

PLAN SHEET
FAP RTE 538 (IL 94)

SCALE: 1"=50' | SHEET NO. 3 OF 16 SHEETS | STA. 1046+00 TO STA. 1076+00

F.A.P RTE.	SECTION	COUNTY	TOTAL SHEETS	SHEET NO.
685/538	(112)RS-3, L, N, I	HANCOCK	156	43
		CONTRACT NO. 72C60		

FED. ROAD DIST. NO. 6 | ILLINOIS | FED. AID PROJECT

PAVEMENT MARKING LEGEND

(11) PR PAINT PAVEMENT MARKING, LINE 5" (SOLID YELLOW)
(12) PR PAINT PAVEMENT MARKING, LINE 5" (SOLID WHITE)
(13) PR PAINT PAVEMENT MARKING, LINE 5" (30' SKIP, 10' DASH YELLOW)
◆ PR RAISED REFLECTIVE PAVEMENT MARKERS, TWO-WAY AMBER

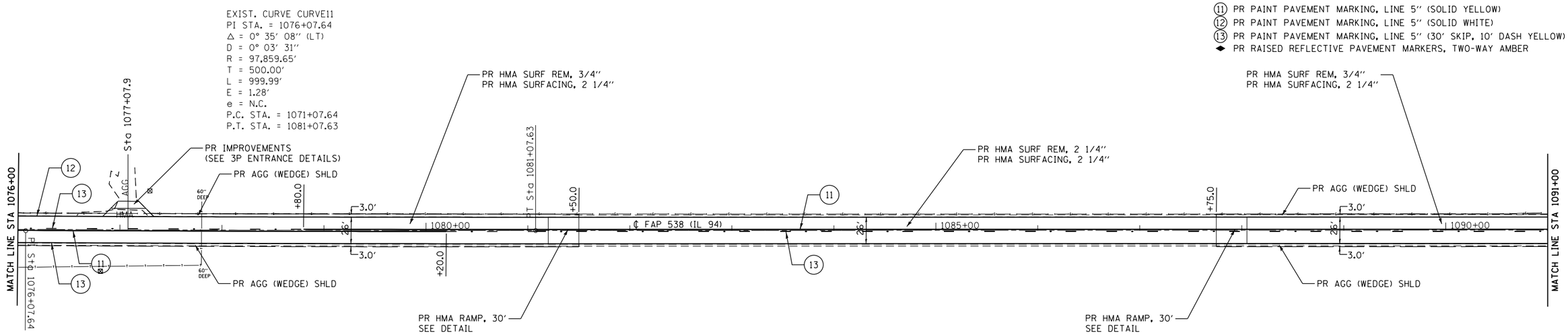

50 0 50 100
SCALE: 1" = 50'

PAVEMENT MARKING LEGEND

(11) PR PAINT PAVEMENT MARKING, LINE 5" (SOLID YELLOW)
(12) PR PAINT PAVEMENT MARKING, LINE 5" (SOLID WHITE)
(13) PR PAINT PAVEMENT MARKING, LINE 5" (30' SKIP, 10' DASH YELLOW)
◆ PR RAISED REFLECTIVE PAVEMENT MARKERS, TWO-WAY AMBER

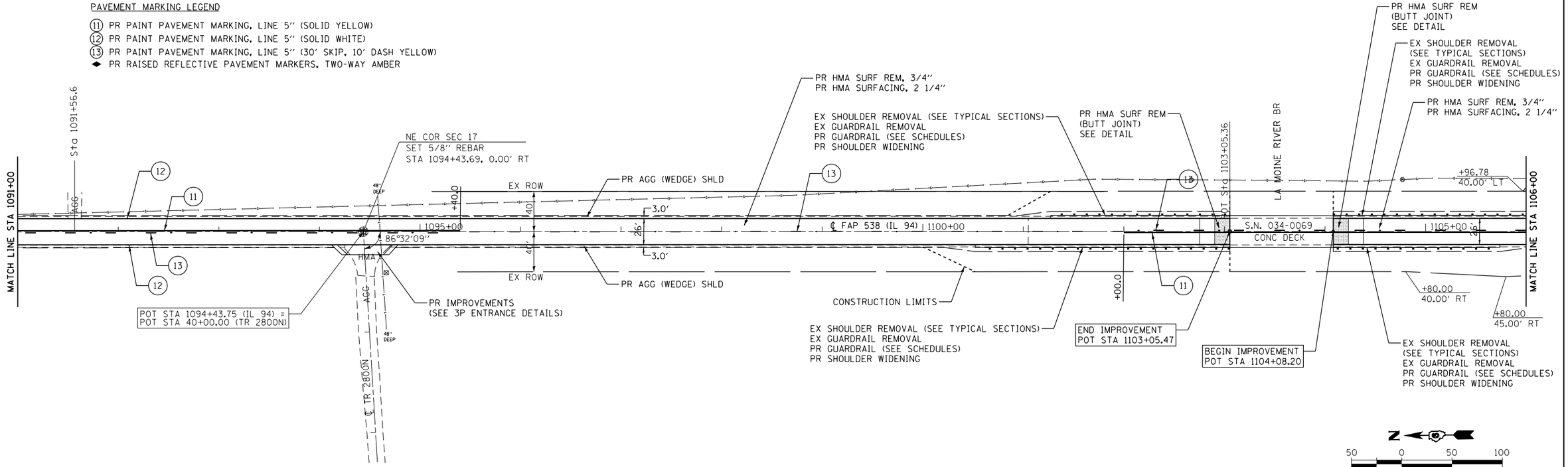

50 0 50 100
SCALE: 1" = 50'

FILE NAME = c:\pw_work\pwidot\edwardsjd\d0388419\D672C60-sht-Plan04_IL 94.dgn	USER NAME = edwardsjd	DESIGNED -	REVISED -
		DRAWN -	REVISED -
	PLOT SCALE = 100.0000 ' / in.	CHECKED -	REVISED -
	PLOT DATE = Mar-10-2015 02:58:18PM	DATE -	REVISED -

STATE OF ILLINOIS
DEPARTMENT OF TRANSPORTATION

PLAN SHEET
FAP RTE 538 (IL 94)

SCALE: 1"=50' | SHEET NO. 4 OF 16 SHEETS | STA. 1076+00 TO STA. 1106+00

F.A.P RTE.	SECTION	COUNTY	TOTAL SHEETS	SHEET NO.
685/538	(112)RS-3, L, N, I	HANCOCK	156	44
		CONTRACT NO. 72C60		

FED. ROAD DIST. NO. 6 | ILLINOIS | FED. AID PROJECT

PAVEMENT MARKING LEGEND

(11) PR PAINT PAVEMENT MARKING, LINE 5" (SOLID YELLOW)
(12) PR PAINT PAVEMENT MARKING, LINE 5" (SOLID WHITE)
(13) PR PAINT PAVEMENT MARKING, LINE 5" (30' SKIP, 10' DASH YELLOW)
◆ PR RAISED REFLECTIVE PAVEMENT MARKERS, TWO-WAY AMBER

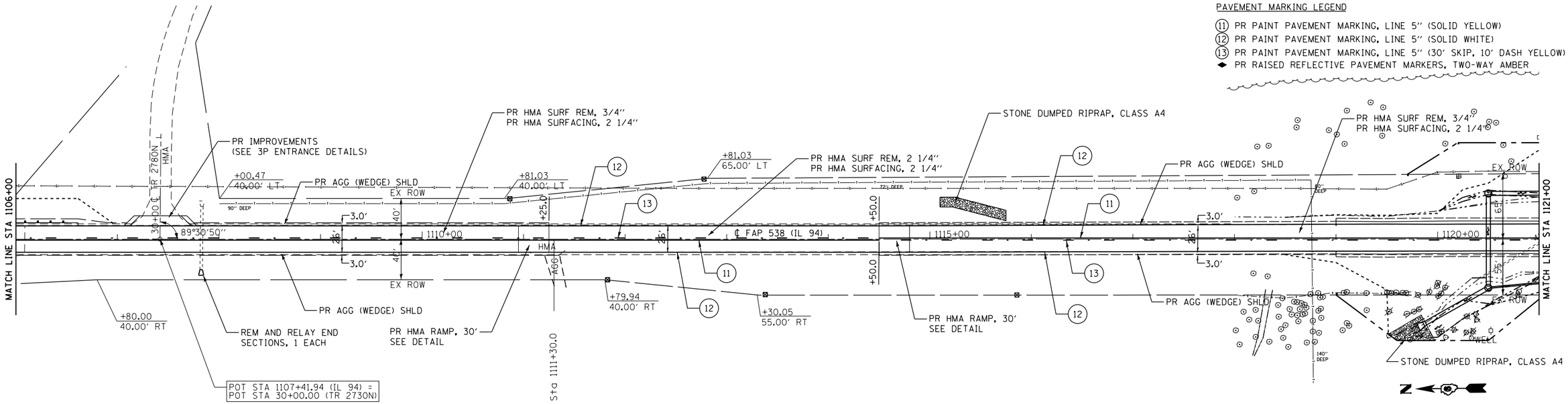

REFER TO SLOPE CORRECTION PLAN DETAIL
SHEET FOR MORE INFORMATION

50 0 50 100
SCALE: 1" = 50'

PAVEMENT MARKING LEGEND

(11) PR PAINT PAVEMENT MARKING, LINE 5" (SOLID YELLOW)
(12) PR PAINT PAVEMENT MARKING, LINE 5" (SOLID WHITE)
(13) PR PAINT PAVEMENT MARKING, LINE 5" (30' SKIP, 10' DASH YELLOW)
◆ PR RAISED REFLECTIVE PAVEMENT MARKERS, TWO-WAY AMBER

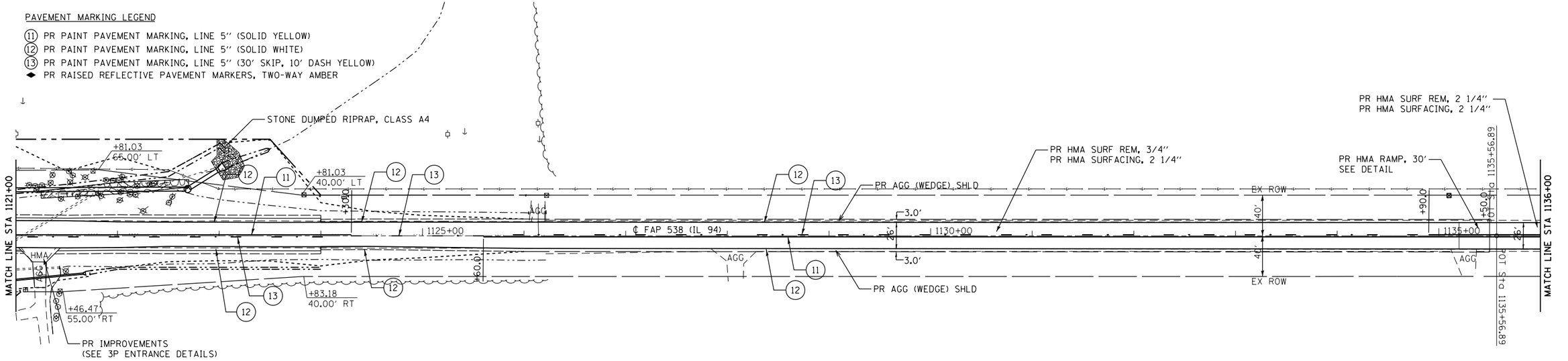

REFER TO SLOPE CORRECTION PLAN DETAIL
SHEET FOR MORE INFORMATION

50 0 50 100
SCALE: 1" = 50'

FILE NAME = c:\pw_work\pwidot\edwardsjd\d0388419\D672C60-sht-Plan05_IL 94.dgn	USER NAME = edwardsjd	DESIGNED -	REVISED -	STATE OF ILLINOIS DEPARTMENT OF TRANSPORTATION	PLAN SHEET FAP RTE 538 (IL 94)	F.A.P RTE.	SECTION	COUNTY	TOTAL SHEETS	SHEET NO.
	PLOT SCALE = 100.0000 ' / in.	CHECKED -	REVISED -			685/538	(112)RS-3, L, N, I	HANCOCK	156	45
	PLOT DATE = Mar-10-2015 02:58:23PM	DATE -	REVISED -		SCALE: 1"=50' / SHEET NO. 5 OF 16 SHEETS / STA. 1106+00 TO STA. 1136+00	FED. ROAD DIST. NO. 6	ILLINOIS	FED. AID PROJECT	CONTRACT NO. 72C60	

PAVEMENT MARKING LEGEND

(11) PR PAINT PAVEMENT MARKING, LINE 5" (SOLID YELLOW)
(12) PR PAINT PAVEMENT MARKING, LINE 5" (SOLID WHITE)
(13) PR PAINT PAVEMENT MARKING, LINE 5" (30' SKIP, 10' DASH YELLOW)
◆ PR RAISED REFLECTIVE PAVEMENT MARKERS, TWO-WAY AMBER

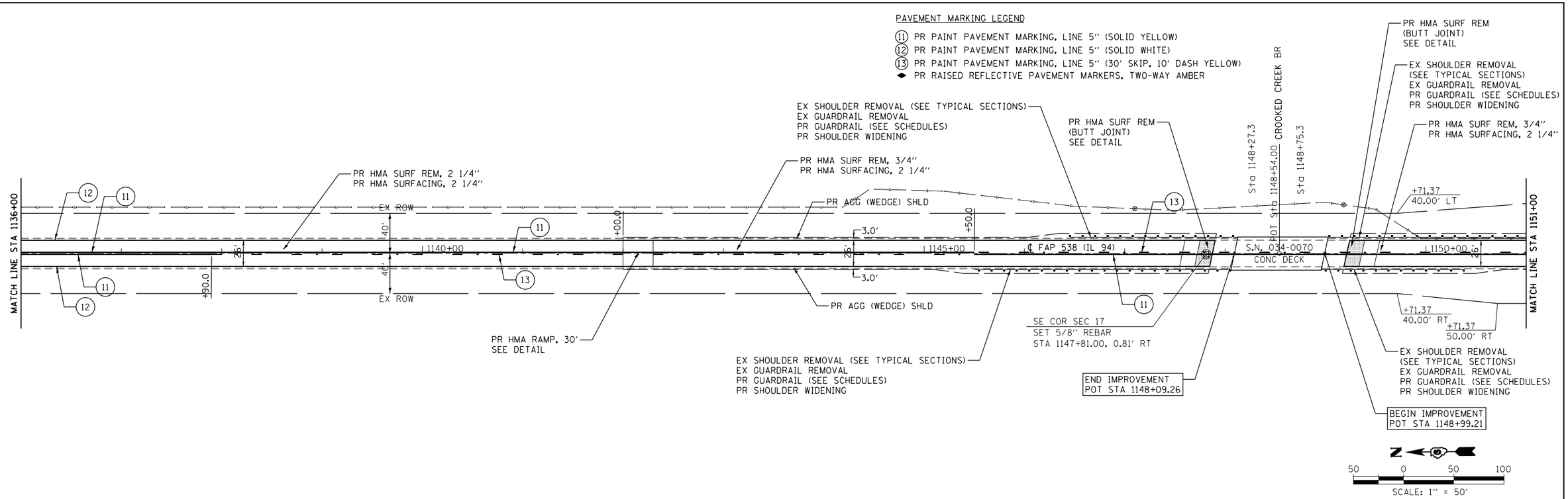

PAVEMENT MARKING LEGEND

(11) PR PAINT PAVEMENT MARKING, LINE 5" (SOLID YELLOW)
(12) PR PAINT PAVEMENT MARKING, LINE 5" (SOLID WHITE)
(13) PR PAINT PAVEMENT MARKING, LINE 5" (30' SKIP, 10' DASH YELLOW)
◆ PR RAISED REFLECTIVE PAVEMENT MARKERS, TWO-WAY AMBER

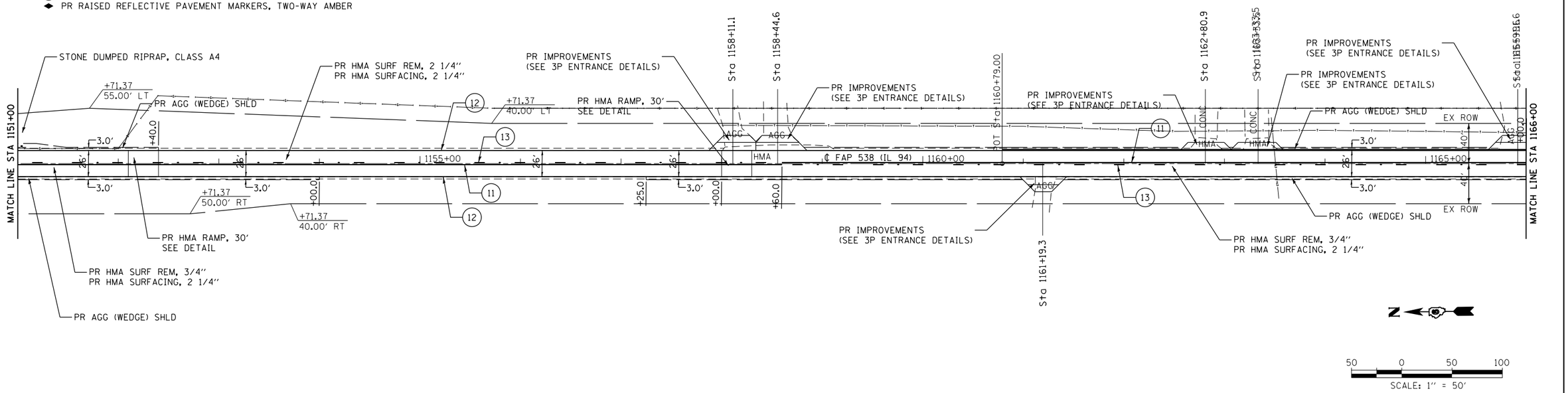

FILE NAME = pw:\\IL084EBIDINTEG.illinois.gov:PWIDOT\Documents\IDOT Offices\District 6\Projects\D672C60\Drawings\KLINGNER\District edit\CADD Sheets\72C60-sht-Plan06_IL 94.dgn	USER NAME = sparksgw	DESIGNED -	REVISED -
		CHECKED -	REVISED -
	PLOT SCALE = 100.0000 ' / in.	DATE -	REVISED -
	PLOT DATE = 10/23/2014		

STATE OF ILLINOIS
DEPARTMENT OF TRANSPORTATION

PLAN SHEET
FAP RTE 538 (IL 94)

SCALE: 1"=50' | SHEET NO. 6 OF 16 SHEETS | STA. 1136+00 TO STA. 1166+00

F.A.P RTE.	SECTION	COUNTY	TOTAL SHEETS	SHEET NO.
685/538	(112)RS-3, L, N, I	HANCOCK	156	46
		CONTRACT NO. 72C60		

FED. ROAD DIST. NO. 6 | ILLINOIS | FED. AID PROJECT

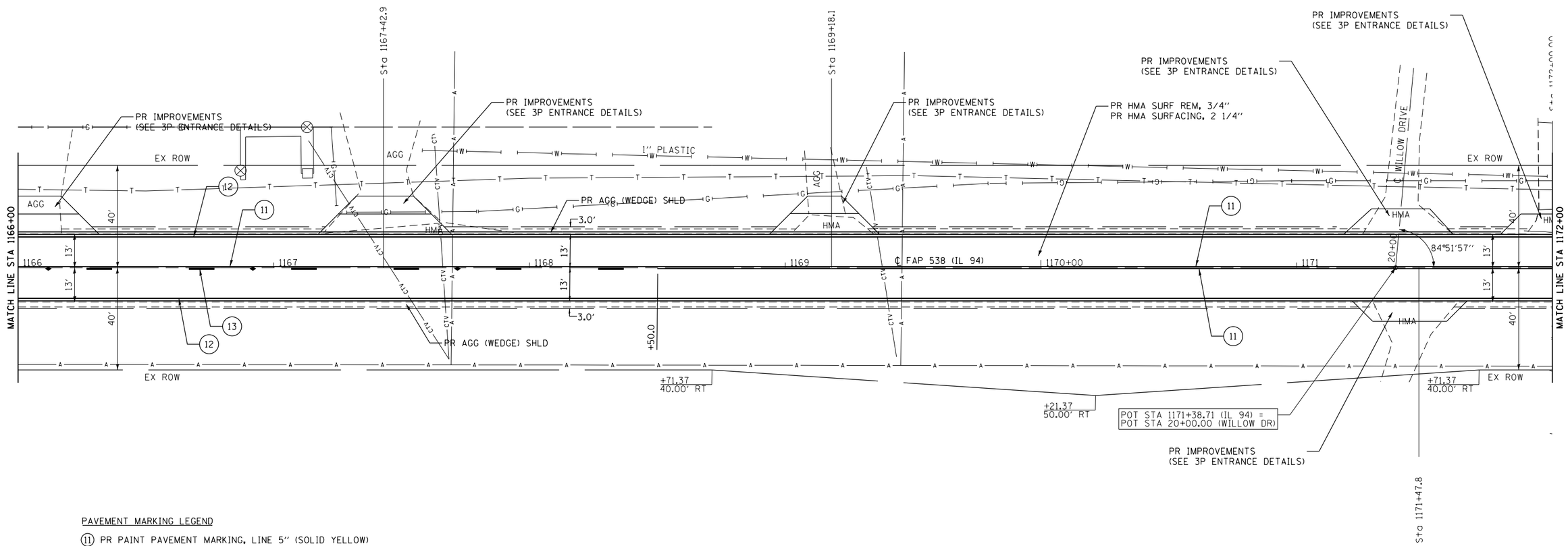

PAVEMENT MARKING LEGEND

(11) PR PAINT PAVEMENT MARKING, LINE 5" (SOLID YELLOW)
(12) PR PAINT PAVEMENT MARKING, LINE 5" (SOLID WHITE)
(13) PR PAINT PAVEMENT MARKING, LINE 5" (30' SKIP, 10' DASH YELLOW)
◆ PR RAISED REFLECTIVE PAVEMENT MARKERS, TWO-WAY AMBER

20 0 20 40
SCALE: 1" = 20'

FILE NAME = pw:\\IL084EBIDINTEG.illinois.gov:PWIDOT\Documents\IDOT Offices\District 6\Projects\D672C60\DRAWINGS\	USER NAME = sparksgw	DESIGNED -	REVISED -
		CHECKED -	REVISED -
	PLOT SCALE = 40.0000 ' / in.	DATE -	REVISED -
	PLOT DATE = 10/23/2014		

STATE OF ILLINOIS
DEPARTMENT OF TRANSPORTATION

PLAN SHEET
FAP RTE 538 (IL 94)

SCALE: 1"=20' | SHEET NO. 7 OF 16 SHEETS | STA. 1166+00 TO STA. 1172+00

F.A.P RTE.	SECTION	COUNTY	TOTAL SHEETS	SHEET NO.
585/538	(112)RS-3, L, N, I	HANCOCK	156	47
		CONTRACT NO. 72C60		

FED. ROAD DIST. NO. 6 | ILLINOIS | FED. AID PROJECT

33 — PIPE CULVERT REMOVAL, 34.5′
PR PIPE CULVERT (CL A), TY 2, 15″ X 60.7′
USFL = 672.50, STA 1173+89.3, 32.9′ LT
DSFL = 669.64, STA 1174+50.1, 33.3′ LT
PRC FLARED END SECTION, 15″ (STD 542301), 1 EACH
SLOPE = 4.78%
TRENCH BACKFILL = 9.5 CU YD

34 — PR CONCRETE COLLAR (SEE DETAIL)
PR PIPE CULVERT (CL A), TY 3, 30″ X 3.5′
FIELD VERIFY ℄ EX CULVERT
USFL = 667.18, STA 1174+52.5, 31.5′ LT
DSFL = 667.09, STA 1174+52.5, 27.8′ LT
SLOPE = 2.63%

35 — STA. 1174+52.5, 33.5′ LT
PR MH, TY A, 6′Ø W/ T 1-C LID
FLAT SLAB TOP (STD 604001)
TG=673.31
FL=666.78

36 — PR PIPE CULVERT (CL A), TY 3, 30″ X 4′
USFL = 668.50, STA 1174+56.5, 38.3′ LT
DSFL = 668.40, STA 1174+54.0, 35.2′ LT
PRC FLARED END SECTION, 30″ (STD 542301), 1 EACH
SLOPE = 2.50%

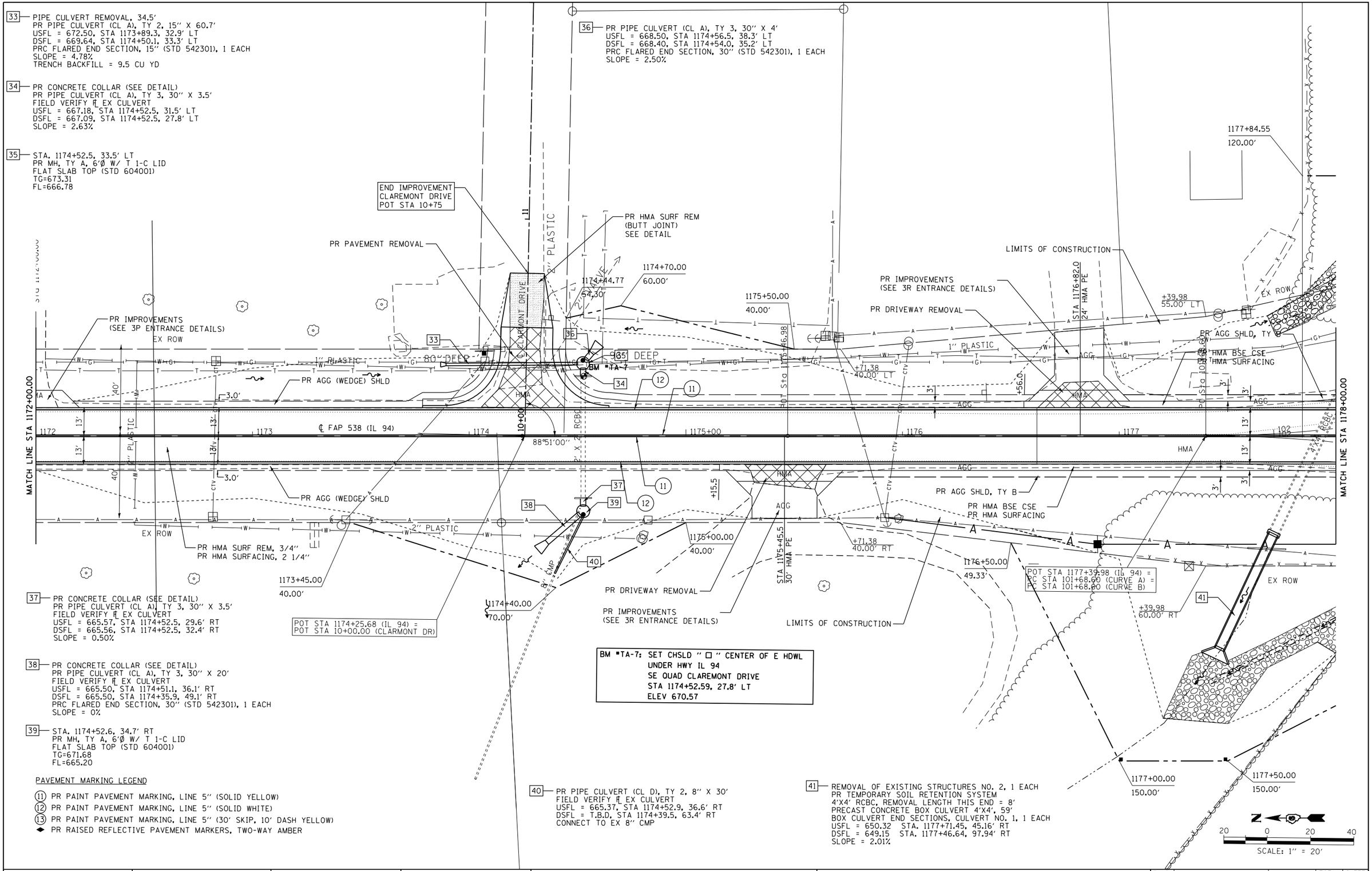

BM ■TA-7: SET CHSLD ″ □ ″ CENTER OF E HDWL
UNDER HWY IL 94
SE QUAD CLAREMONT DRIVE
STA 1174+52.59, 27.8′ LT
ELEV 670.57

37 — PR CONCRETE COLLAR (SEE DETAIL)
PR PIPE CULVERT (CL A), TY 3, 30″ X 3.5′
FIELD VERIFY ℄ EX CULVERT
USFL = 665.57, STA 1174+52.5, 29.6′ RT
DSFL = 665.56, STA 1174+52.5, 32.4′ RT
SLOPE = 0.50%

38 — PR CONCRETE COLLAR (SEE DETAIL)
PR PIPE CULVERT (CL A), TY 3, 30″ X 20′
FIELD VERIFY ℄ EX CULVERT
USFL = 665.50, STA 1174+51.1, 36.1′ RT
DSFL = 665.50, STA 1174+35.9, 49.1′ RT
PRC FLARED END SECTION, 30″ (STD 542301), 1 EACH
SLOPE = 0%

39 — STA. 1174+52.6, 34.7′ RT
PR MH, TY A, 6′Ø W/ T 1-C LID
FLAT SLAB TOP (STD 604001)
TG=671.68
FL=665.20

PAVEMENT MARKING LEGEND

(11) PR PAINT PAVEMENT MARKING, LINE 5″ (SOLID YELLOW)
(12) PR PAINT PAVEMENT MARKING, LINE 5″ (SOLID WHITE)
(13) PR PAINT PAVEMENT MARKING, LINE 5″ (30′ SKIP, 10′ DASH YELLOW)
◆ PR RAISED REFLECTIVE PAVEMENT MARKERS, TWO-WAY AMBER

40 — PR PIPE CULVERT (CL D), TY 2, 8″ X 30′
FIELD VERIFY ℄ EX CULVERT
USFL = 665.37, STA 1174+52.9, 36.6′ RT
DSFL = T.B.D, STA 1174+39.5, 63.4′ RT
CONNECT TO EX 8″ CMP

41 — REMOVAL OF EXISTING STRUCTURES NO. 2, 1 EACH
PR TEMPORARY SOIL RETENTION SYSTEM
4′X4′ RCBC, REMOVAL LENGTH THIS END = 8′
PRECAST CONCRETE BOX CULVERT 4′X4′, 59′
BOX CULVERT END SECTIONS, CULVERT NO. 1, 1 EACH
USFL = 650.32 STA. 1177+71.45, 45.16′ RT
DSFL = 649.15 STA. 1177+46.64, 97.94′ RT
SLOPE = 2.01%

FILE NAME = c:\pw_work\pwidot\edwardsjd\d0388419\Culvert Information.dgn	USER NAME = edwardsjd	DESIGNED -	REVISED -	STATE OF ILLINOIS DEPARTMENT OF TRANSPORTATION	PLAN SHEET FAP RTE 538 (IL94)	F.A.P. RTE. 685/538	SECTION (112)RS-3,L,N,I
	PLOT SCALE = 40.0000 ′ / in.	DRAWN -	REVISED -			COUNTY HANCOCK	TOTAL SHEETS 156 / SHEET NO. 48
	PLOT DATE = Mar-10-2015 02:58:25PM	CHECKED -	REVISED -			CONTRACT NO. 72C60	
Default		DATE -	REVISED -		SCALE: SHEET OF SHEETS STA. TO STA.	ILLINOIS FED. AID PROJECT	

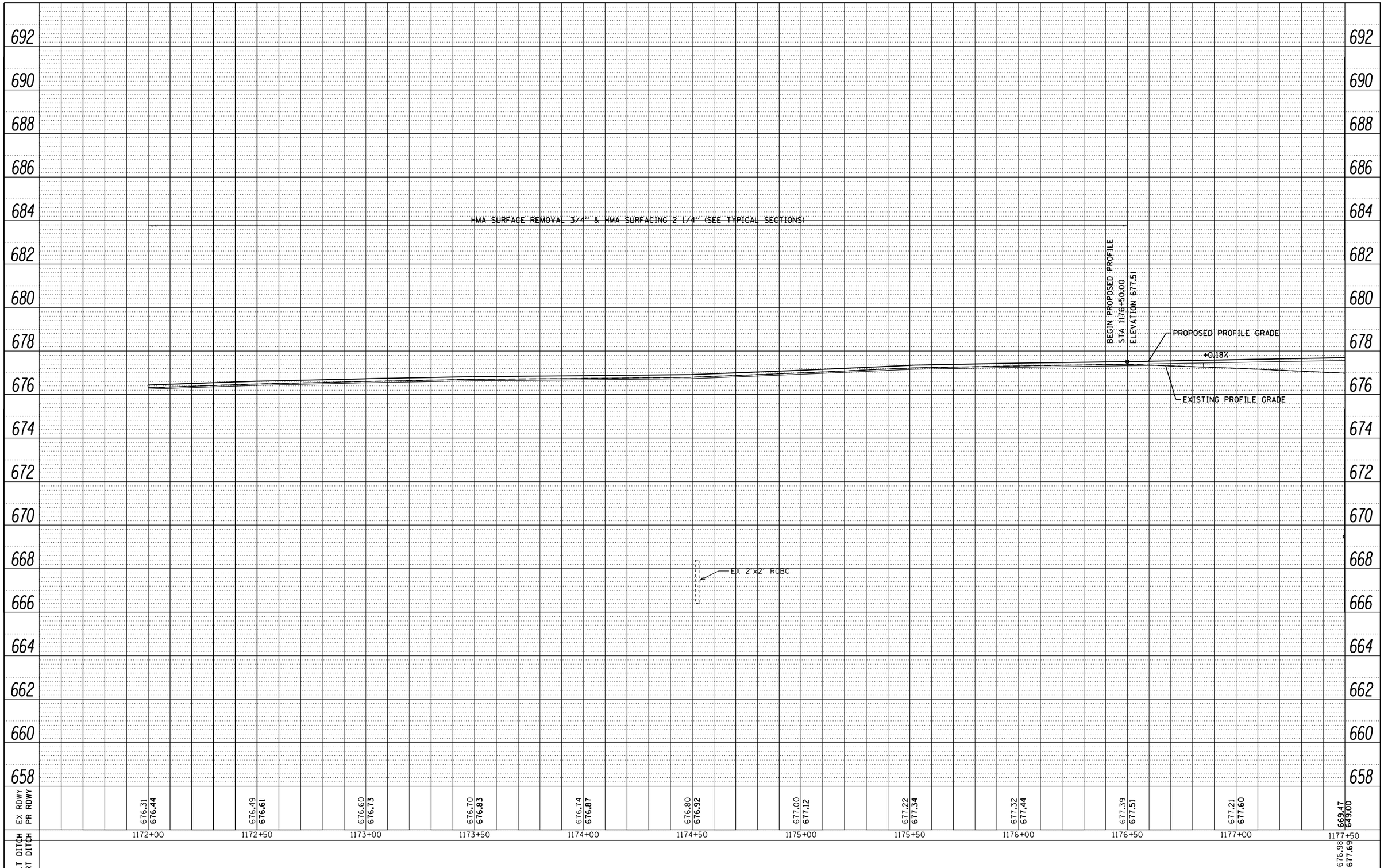

PLAN		BY	DATE
NOTE BOOK NO. ____	SURVEYED		
	PLOTTED		
	ALIGNMENT CHECKED		
	RT. OF WAY CHECKED		
	CADD FILE NAME		

PROFILE		BY	DATE
NOTE BOOK NO. ____	SURVEYED		
	PLOTTED		
	GRADES CHECKED		
	B.M. NOTED		
	STRUCTURE NOTAT'NS CH'KD		

FILE NAME = pw:\\IL084EBIDINTEG.illinois.gov:PWIDOT\Documents\IDOT Offices\District 6\Projects\D672C60\Drawings\KLINGNER\District edit\CADD Sheets\72C60-sht-profile.dgn	USER NAME = sparksgw	DESIGNED -	REVISED -
		DRAWN -	REVISED -
	PLOT SCALE = 40.0000 ' / in.	CHECKED -	REVISED -
Default	PLOT DATE = 10/23/2014	DATE -	REVISED -

STATE OF ILLINOIS
DEPARTMENT OF TRANSPORTATION

PROFILE

SCALE: SHEET OF SHEETS STA. TO STA.

F.A.P. RTE.	SECTION	COUNTY	TOTAL SHEETS	SHEET NO.
685/538	(112)RS-3,L,N,I	HANCOCK	156	49
		CONTRACT NO. 72C60		
		ILLINOIS FED. AID PROJECT		

EXIST. CURVE B
PI STA. = 107+31.60
Δ = 94° 23′ 33″ (LT)
D = 10° 59′ 19″
R = 521.41′
T = 563.00′
L = 859.01′
E = 245.95′
e = 8.3%
P.C. STA. = 101+68.60
P.T. STA. = 110+27.61

42 — REMOVAL OF EXISTING STRUCTURES NO. 3, 1 EACH
4′X4′ RCBC, REMOVAL LENGTH THIS END = 8′
PRECAST CONCRETE BOX CULVERT 4′ X 4′ X 42′
BOX CULVERT END SECTIONS, CULVERT NO. 1, 1 EACH
USFL = 654.28 STA. 1178+31.51, 82.55′ LT
DSFL = 653.76 STA. 1178+13.59, 44.45′ RT
SLOPE = 1.23%
PR TEMPORARY SOIL RETENTION SYSTEM

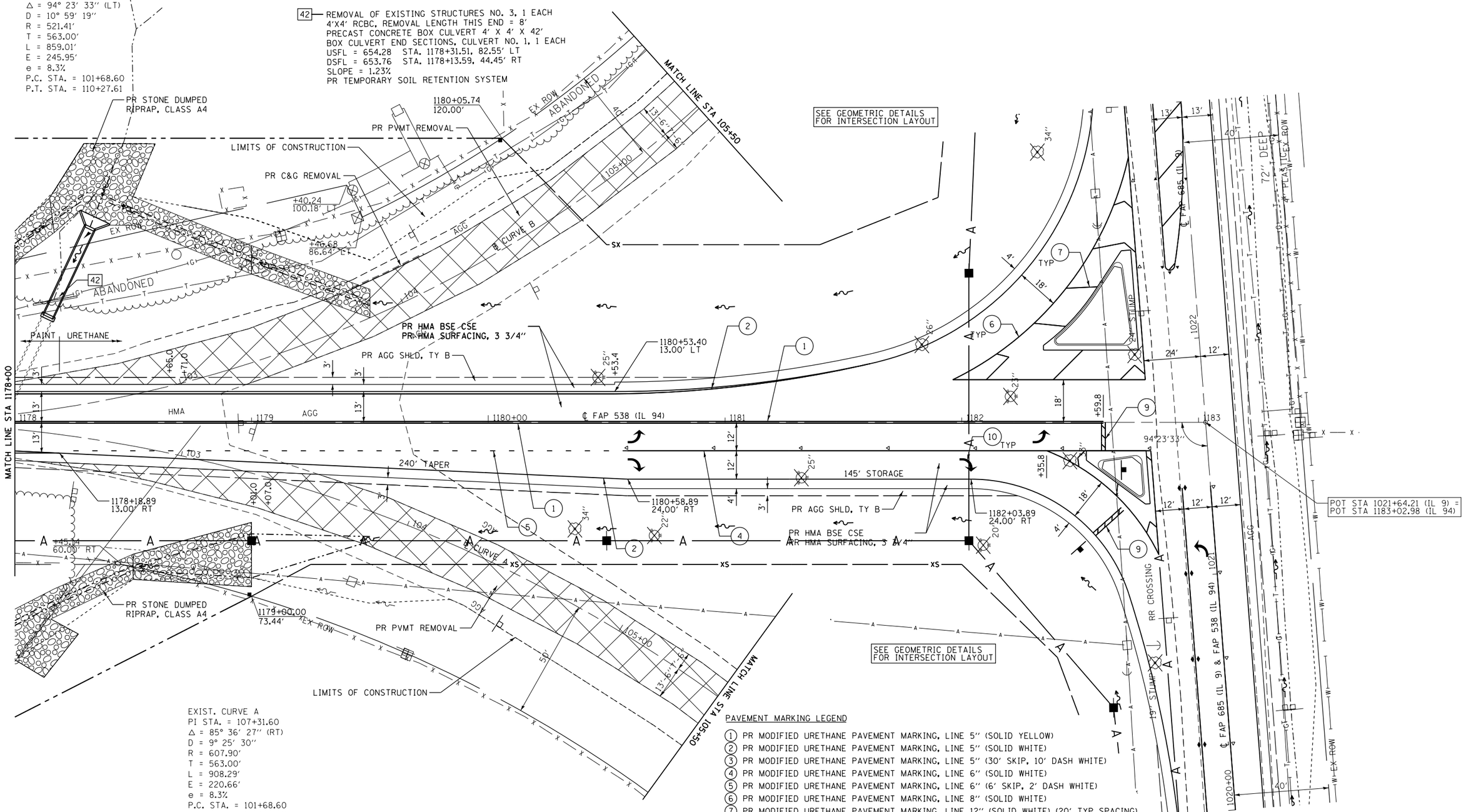

EXIST. CURVE A
PI STA. = 107+31.60
Δ = 85° 36′ 27″ (RT)
D = 9° 25′ 30″
R = 607.90′
T = 563.00′
L = 908.29′
E = 220.66′
e = 8.3%
P.C. STA. = 101+68.60
P.T. STA. = 110+76.89

PAVEMENT MARKING LEGEND

1. PR MODIFIED URETHANE PAVEMENT MARKING, LINE 5″ (SOLID YELLOW)
2. PR MODIFIED URETHANE PAVEMENT MARKING, LINE 5″ (SOLID WHITE)
3. PR MODIFIED URETHANE PAVEMENT MARKING, LINE 5″ (30′ SKIP, 10′ DASH WHITE)
4. PR MODIFIED URETHANE PAVEMENT MARKING, LINE 6″ (SOLID WHITE)
5. PR MODIFIED URETHANE PAVEMENT MARKING, LINE 6″ (6′ SKIP, 2′ DASH WHITE)
6. PR MODIFIED URETHANE PAVEMENT MARKING, LINE 8″ (SOLID WHITE)
7. PR MODIFIED URETHANE PAVEMENT MARKING, LINE 12″ (SOLID WHITE) (20′ TYP SPACING)
8. PR MODIFIED URETHANE PAVEMENT MARKING, LINE 12″ (SOLID YELLOW) (20′ TYP SPACING)
9. PR PREFORMED PLASTIC PAVEMENT MARKING, TYPE B (INLAID), LINE 24″ (SOLID WHITE)
10. PR PREFORMED PLASTIC PAVEMENT MARKING, TYPE B (INLAID), LETTERS AND SYMBOLS (SOLID WHITE)

▷ PR RAISED REFLECTIVE PAVEMENT MARKERS, ONE-WAY CRYSTAL
▶ PR RAISED REFLECTIVE PAVEMENT MARKERS, ONE-WAY AMBER
◆ PR RAISED REFLECTIVE PAVEMENT MARKERS, TWO-WAY AMBER

20 0 20 40
SCALE: 1″ = 20′

FILE NAME = c:\pw_work\pwidot\edwardsjd\d0388419\D672C60-sht-Plan09_IL 94.dgn	USER NAME = edwardsjd	DESIGNED -	REVISED -
		DRAWN -	REVISED -
	PLOT SCALE = 40.0000 ′ / in.	CHECKED -	REVISED -
	PLOT DATE = Mar-10-2015 02:58:27PM	DATE -	REVISED -

STATE OF ILLINOIS
DEPARTMENT OF TRANSPORTATION

PLAN SHEET
FAP RTE 538 (IL 94)

SCALE: 1″=20′ | SHEET NO. 9 OF 16 SHEETS | STA. 1178+00 TO STA. 1183+02.98

F.A.P RTE.	SECTION	COUNTY	TOTAL SHEETS	SHEET NO.
685/538	(112)RS-3, L, N, I	HANCOCK	156	50
		CONTRACT NO. 72C60		

FED. ROAD DIST. NO. 6 | ILLINOIS | FED. AID PROJECT

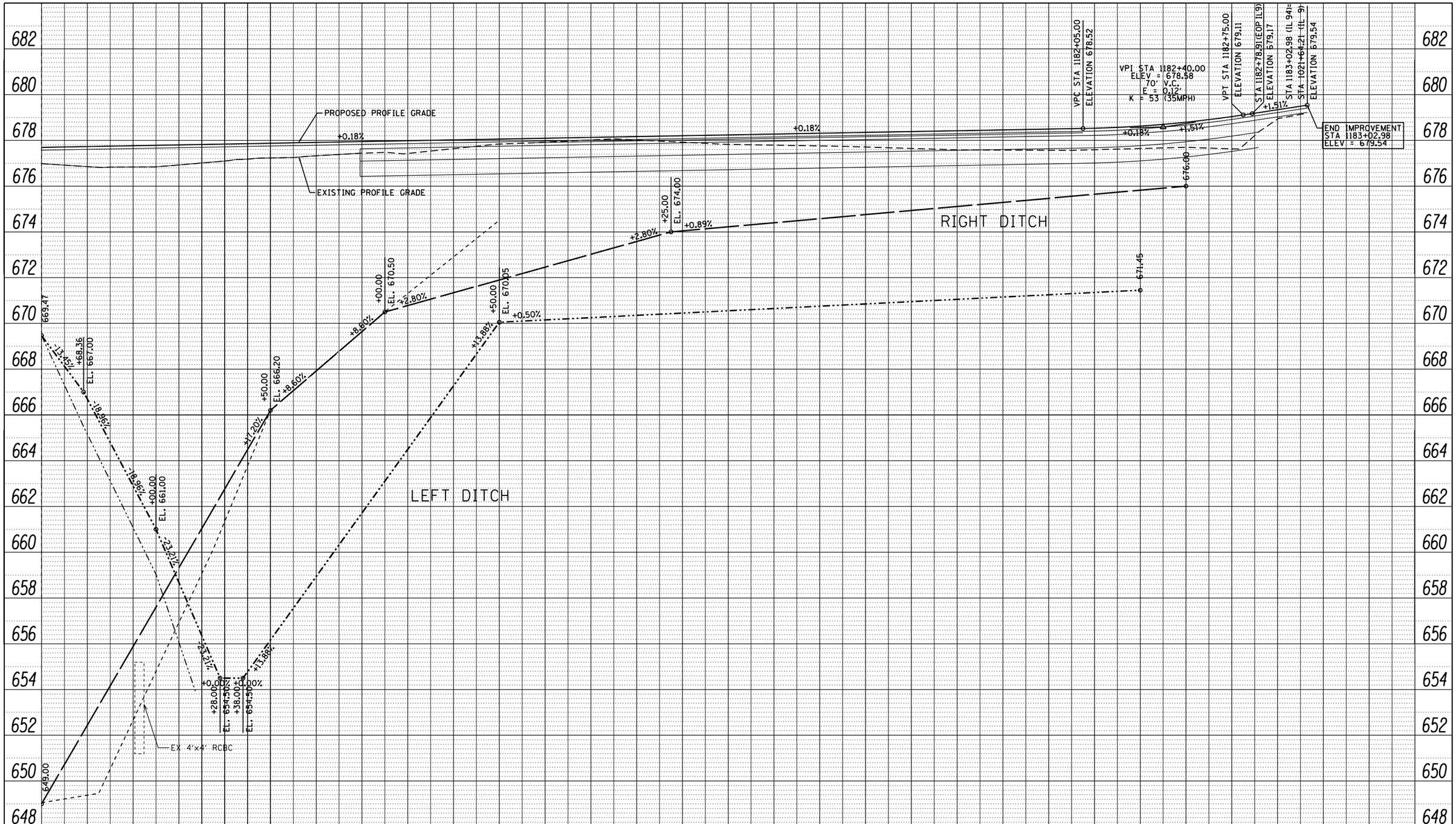

PLAN
SURVEYED
PLOTTED
ALIGNMENT CHECKED
RT. OF WAY CHECKED
CADD FILE NAME
NOTE BOOK NO.
BY
DATE

PROFILE
SURVEYED
PLOTTED
GRADES CHECKED
B.M. NOTED
STRUCTURE NOTAT'NS CH'KD
NOTE BOOK NO.
BY
DATE

FILE NAME = pw:\\IL084EBIDINTEG.illinois.gov:PWIDOT\Documents\IDOT Offices\District 6\Projects\D672C60\DRAWINGS\C60-sht-profile.dgn	USER NAME = sparksgw	DESIGNED -	REVISED -
		DRAWN -	REVISED -
	PLOT SCALE = 40.0000 ' / in.	CHECKED -	REVISED -
Default	PLOT DATE = 10/23/2014	DATE -	REVISED -

STATE OF ILLINOIS
DEPARTMENT OF TRANSPORTATION

PROFILE

SCALE: SHEET OF SHEETS STA. TO STA.

F.A.P. RTE.	SECTION	COUNTY	TOTAL SHEETS	SHEET NO.
685/538	(112)RS-3,L,N,I	HANCOCK	156	51
		CONTRACT NO. 72C60		
		ILLINOIS FED. AID PROJECT		

29 — PR PIPE CULVERT (CL A), (JACKED), 42" X 75.5'
USFL = 654.43, STA 1120+50.0, 42.5' LT
DSFL = 652.17, STA 1120+50.0, 33.0' RT
PR PIPE CULVERT (CL A), TY 2, 42" X 12.5'
USFL = 652.17, STA 1120+50.0, 33.0' RT
DSFL = 651.80, STA 1120+50.0, 45.5' RT
SLOPE = 3.00%

30 — STA. 1120+50.0, 45.0' LT
PR MH, TY A, 7'Ø W/ MED INLET 36" (STD 604106)
FLAT SLAB TOP (STD 602601)
TS=660.26
FL=653.51

31 — PR PIPE CULVERT (CL A), TY 1, 42" X 215.0'
USFL = 655.17, STA 1122+67.1, 46.0' LT
DSFL = 654.51, STA 1120+52.5, 45.0' LT
SLOPE = 0.31%

32 — PR PIPE CULVERT (CL D), TY 1, 15" X 115.0'
USFL = 662.49, STA 1121+66.3, 37.2' RT
DSFL = 654.59, STA 1120+51.9, 47.8' RT
METAL END SECTIONS 15", 1 EACH
SLOPE = 6.87%

WAYNE AND SUSAN BRAY
PARCEL NO. 6102122

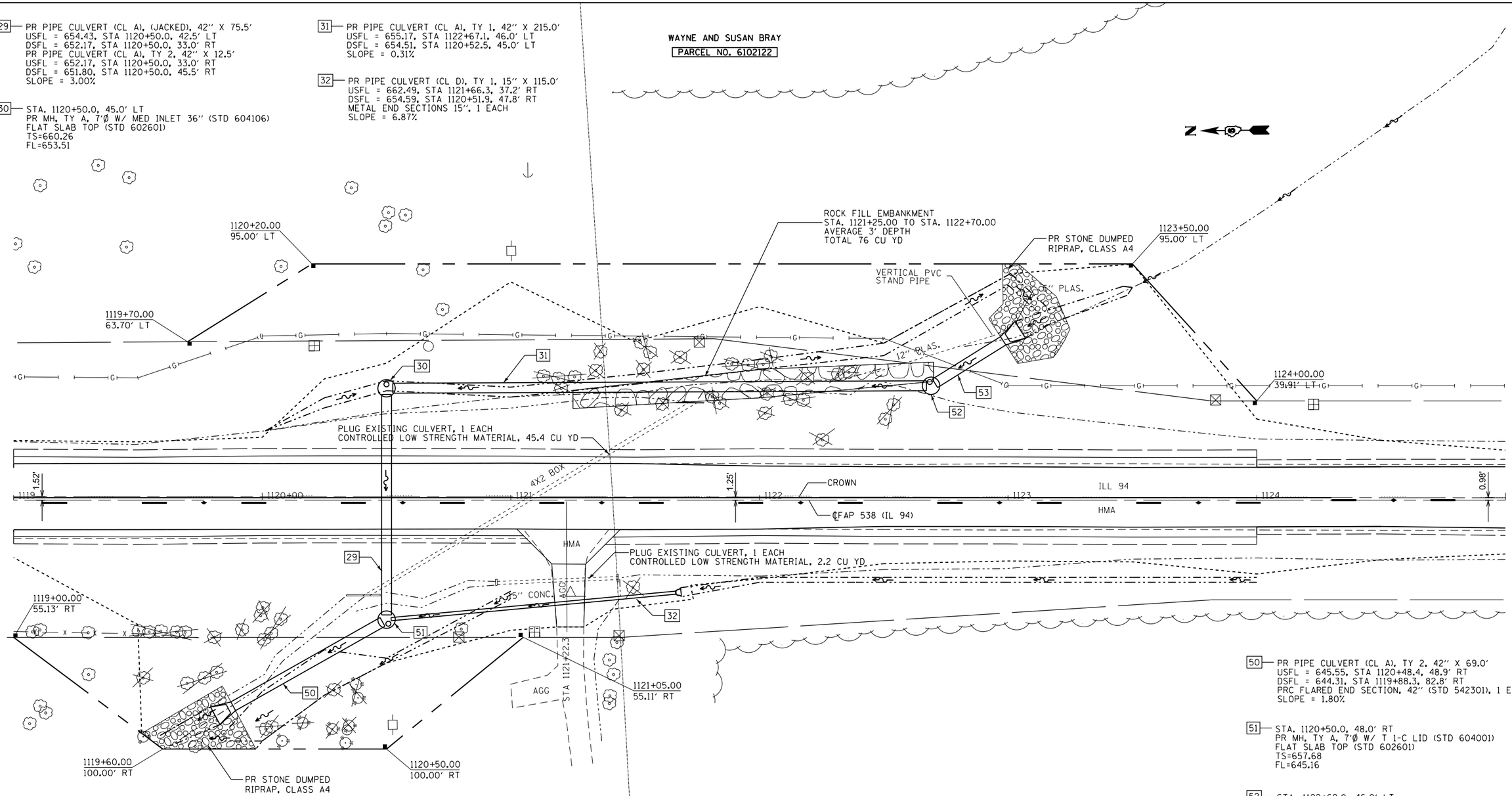

50 — PR PIPE CULVERT (CL A), TY 2, 42" X 69.0'
USFL = 645.55, STA 1120+48.4, 48.9' RT
DSFL = 644.31, STA 1119+88.3, 82.8' RT
PRC FLARED END SECTION, 42" (STD 542301), 1 EACH
SLOPE = 1.80%

51 — STA. 1120+50.0, 48.0' RT
PR MH, TY A, 7'Ø W/ T 1-C LID (STD 604001)
FLAT SLAB TOP (STD 602601)
TS=657.68
FL=645.16

52 — STA. 1122+69.0, 46.0' LT
PR MH, TY A, 7'Ø W/ MED INLET 36" (STD 604106)
FLAT SLAB TOP (STD 602601)
TS=661.13
FL=654.54

53 — PR PIPE CULVERT (CL A), TY 1, 42" X 32.5'
USFL = 655.42, STA 1122+98.0, 64.1' LT
DSFL = 655.38, STA 1122+70.6, 47.0' LT
PRC FLARED END SECTION, 42" (STD 542301), 1 EACH
SLOPE = 0.12%

RICHARD D. WOOD AND DONNA S. WOOD
PARCEL NO. 6102121

• PLEASE REFER TO THE CROSS SECTIONS FOR THE OFFSETS FROM THE PROPOSED CENTERLINE TO THE CROWN.

0 20 40 60
SCALE IN FEET

FILE NAME = c:\pw_work\pwidot\edwardsjd\d0388419\Slope_Correction Plan Detail.dgn	USER NAME = edwardsjd	DESIGNED -	REVISED -	STATE OF ILLINOIS DEPARTMENT OF TRANSPORTATION	SLOPE CORRECTION PLAN DETAIL	F.A.P. RTE.	SECTION	COUNTY	TOTAL SHEETS / SHEET NO.
	PLOT SCALE = 40.0000 ' / in.	DRAWN -	REVISED -			685/538	(112)RS-3,L,N,1	HANCOCK	156 / 52
		CHECKED -	REVISED -					CONTRACT NO. 72C60	
Default	PLOT DATE = Mar-10-2015 02:58:30PM	DATE -	REVISED -		SCALE: SHEET OF SHEETS STA. TO STA.			ILLINOIS FED. AID PROJECT	

PLAN	BY	DATE
SURVEYED		
PLOTTED		
ALIGNMENT CHECKED		
RT. OF WAY CHECKED		
CADD FILE NAME		
NOTE BOOK NO.		

PROFILE	BY	DATE
SURVEYED		
PLOTTED		
GRADES CHECKED		
BM. NOTED		
STRUCTURE NOTATNS CHKD		
NOTE BOOK NO.		

FILE NAME = c:\pw_work\pwidot\edwardsjd\d0388419\PR-ProfileSF-LT_side.dgn	USER NAME = edwardsjd	DESIGNED -	REVISED -
		DRAWN -	REVISED -
	PLOT SCALE = 40.0000 ' / in.	CHECKED -	REVISED -
Default	PLOT DATE = Mar-10-2015 02:58:31PM	DATE -	REVISED -

STATE OF ILLINOIS
DEPARTMENT OF TRANSPORTATION

PR PROFILE LT-SIDE

SCALE: SHEET OF SHEETS STA. TO STA.

F.A.P. RTE.	SECTION	COUNTY	TOTAL SHEETS	SHEET NO.
685/538	(112)RS-3,L,N,I	HANCOCK	156	53

CONTRACT NO. 72C60

ILLINOIS FED. AID PROJECT

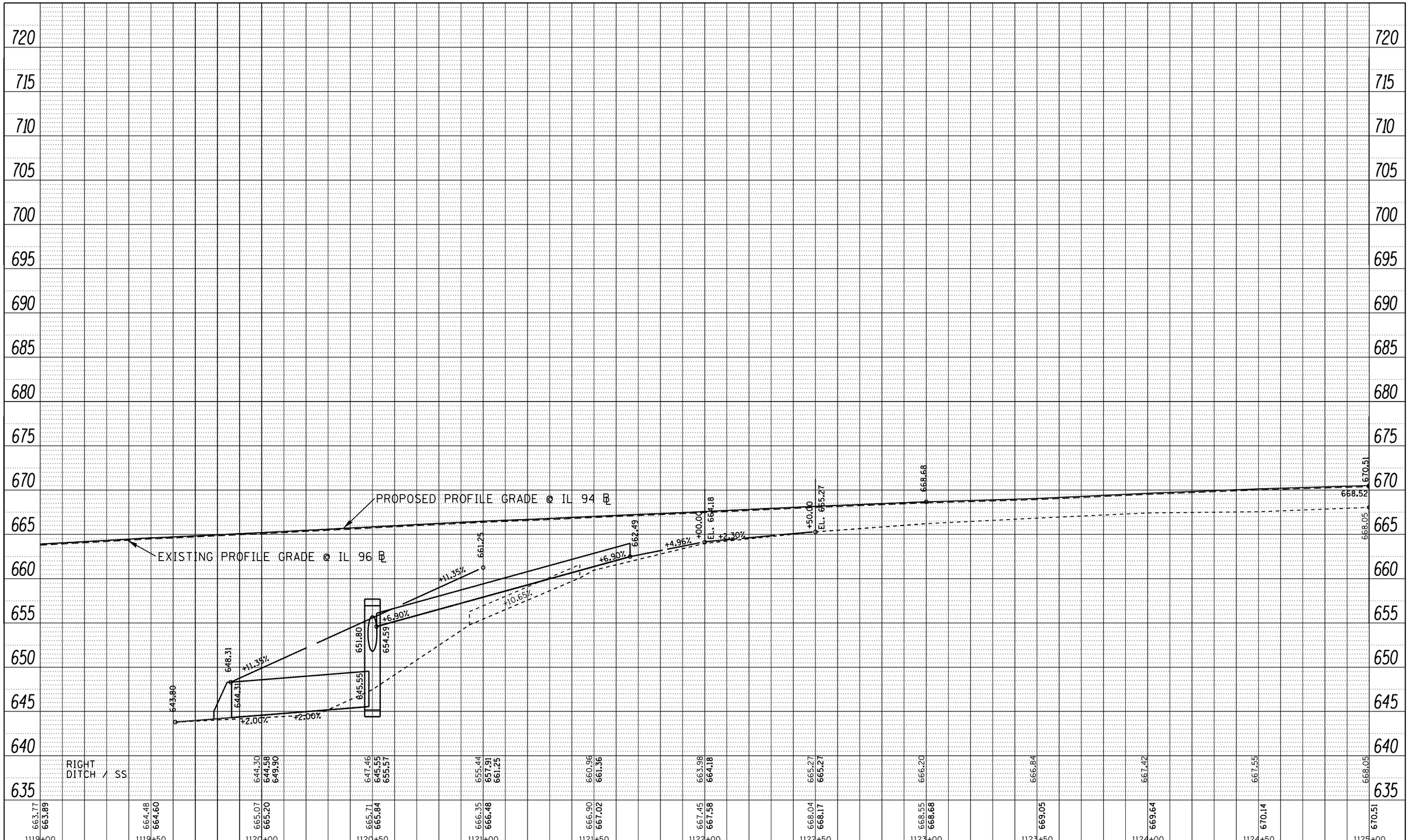

PLAN	BY	DATE
SURVEYED		
PLOTTED		
ALIGNMENT CHECKED		
RT. OF WAY CHECKED		
CADD FILE NAME		
NOTE BOOK NO.		

PROFILE	BY	DATE
SURVEYED		
PLOTTED		
GRADES CHECKED		
BM. NOTED		
STRUCTURE NOTATNS CHKD		
NOTE BOOK NO.		

FILE NAME = c:\pw_work\pwidot\edwardsjd\d0388419\PR-ProfileSF-RT_side.dgn	USER NAME = edwardsjd	DESIGNED -	REVISED -
		DRAWN -	REVISED -
	PLOT SCALE = 40.0000 ' / in.	CHECKED -	REVISED -
Default	PLOT DATE = Mar-10-2015 02:58:33PM	DATE -	REVISED -

STATE OF ILLINOIS
DEPARTMENT OF TRANSPORTATION

PR DRAINAGE PROFILE RT SIDE

SCALE: SHEET OF SHEETS STA. TO STA.

F.A.P. RTE.	SECTION	COUNTY	TOTAL SHEETS	SHEET NO.
685/538	(112)RS-3,L,N,I	HANCOCK	156	54

CONTRACT NO. 72C60

ILLINOIS FED. AID PROJECT

1 — STA 1013+49.5 LT (26.5° RT AH)
PR TEMPORARY SOIL RETENTION SYSTEM
REMOVE EX WING WALLS
PR CONCRETE COLLAR (SEE DETAIL)
PR PIPE CULVERT (CL A), TY 2, 24" X 28'
USFL = 661.29, STA 1013+40.7, 18.5' LT
DSFL = 661.00, STA 1013+24.6, 37.9' LT
PRE REINF CONC END SECTION, 24" (STD 542301)
TRENCH BACKFILL = 2.5 CU YD

3 — STA 1013+62.0, 27.0' LT
PR TEMPORARY SOIL RETENTION SYSTEM
PR MH, TY A, 7'Ø W/ TY 8 GR (STD 604036)
FLAT SLAB TOP (STD 604001)
TG = 663.85
FL = 657.20 (FIELD VERIFY)
PARTIAL PIPE CULVERT REMOVAL = 5'

4 — STA 1013+76.0 LT (26.5° RT AH)
PR TEMPORARY SOIL RETENTION SYSTEM
REMOVE EX WING WALLS
PR CONCRETE COLLAR (SEE DETAIL)
PR PIPE CULVERT (CL A), TY 2, 36" X 8'
USFL = 658.80, STA 1013+66.2, 17.4' LT
DSFL = 658.68, STA 1013+63.4, 23.8' LT
TRENCH BACKFILL = 13.7 CU YD

8 — STA 1013+97.5, 25.6' LT
PR PIPE CULVERT (CL D), TY 2, 18" X 50'
METAL END SECTIONS, 1 EACH (STD 542401)
USFL = 662.57, STA 1014+15.5, 27.0' LT
DSFL = 660.50, STA 1013+65.5, 27.0' LT

EXIST. CURVE A
PI STA. = 107+31.60
Δ = 85° 36' 27" (RT)
D = 9° 25' 30"
R = 607.90'
T = 563.00'
L = 908.29'
E = 220.66'
e = 8.3%
P.C. STA. = 101+68.60
P.T. STA. = 110+76.89

POT STA 1016+01.21 (IL 9 & IL 94) = PT STA 110+76.89 (CURVE A)

PR IMPROVEMENTS (SEE 3R ENTRANCE DETAILS)
PR HMA BSE CSE
PR HMA SURFACING, 3 3/4"
PR TY A GUTTER OUTLET (GRADE > 2%, INCREASE LENGTH 6')
PR AGG SHLD, TY B
1014+57.35 12.00' LT
PR 12' WIDE AGG CE (MATCH EX LOCATION)
BM #N-33
HMA VARIABLE DEPTH REMOVAL
PR HMA SURFACING, 3 3/4"
PR C&G REMOVAL
PR TY A GUTTER
PR PVMT REMOVAL
EX ROW
EX RR ROW
STA 1013+97.5 12' AGG FE
STA 1014+30.0 12' AGG FE
BEGIN IMPROVEMENT POT STA 1012+27.31
PR HMA SURF REM (BUTT JOINT) SEE DETAIL
PR HMA SURF REM (BUTT JOINT) SEE DETAIL
PR IMPROVEMENTS (SEE 3R ENTRANCE DETAILS)
PR TY A GUTTER OUTLET (GRADE > 2%, INCREASE LENGTH 6')
WELCOME TO LAHARPE
CURVE A
360' TAPER
℄ FAP 685 (IL 9 & IL 94)
MATCH LINE STA 1018+00
4" PLASTIC
PR C&G REMOVAL
LIMITS OF CONSTRUCTION
PR HMA BSE CSE
PR HMA SURFACING, 3 3/4"
PR TY A GUTTER
TYP
SCALE: 1" = 20'

PAVEMENT MARKING LEGEND

1a PR MODIFIED URETHANE PAVEMENT MARKING, LINE 5" (DOUBLE SOLID YELLOW)
2 PR MODIFIED URETHANE PAVEMENT MARKING, LINE 5" (SOLID WHITE)
8 PR MODIFIED URETHANE PAVEMENT MARKING, LINE 12" (SOLID YELLOW) (20' TYP SPACING)
9 PR PREFORMED PLASTIC PAVEMENT MARKING, TYPE B (INLAID), LINE 24" (SOLID WHITE)
10 PR PREFORMED PLASTIC PAVEMENT MARKING, TYPE B (INLAID), LETTERS AND SYMBOLS (SOLID WHITE)
▷ PR RAISED REFLECTIVE PAVEMENT MARKERS, ONE-WAY CRYSTAL
► PR RAISED REFLECTIVE PAVEMENT MARKERS, ONE-WAY AMBER
◆ PR RAISED REFLECTIVE PAVEMENT MARKERS, TWO-WAY AMBER

2 — STA 1013+49.5 RT
PR TEMPORARY SOIL RETENTION SYSTEM
REMOVE EX WING WALLS
PR CONCRETE COLLAR (SEE DETAIL)
PR PIPE CULVERT (CL A), TY 2, 24" X 10'
USFL = 661.86, STA 1013+58.5, 27.8' RT
DSFL = 661.75, STA 1013+58.5, 17.8' RT
PRE REINF CONC END SECTION, 24" (STD 542301)
TRENCH BACKFILL = 3.5 CU YD

5 — STA 1013+76.0 RT (26.5° RT AH)
PR TEMPORARY SOIL RETENTION SYSTEM
REMOVE EX WING WALLS
PR CONCRETE COLLAR (SEE DETAIL)
PR PIPE CULVERT (CL A), TY 2, 36" X 10'
USFL = 659.56, STA 1013+90.0, 24.8' RT
DSFL = 659.45, STA 1013+86.1, 17.9' RT
TRENCH BACKFILL = 9.5 CU YD

6 — STA 1013+92.0, 28.3' RT
PR TEMPORARY SOIL RETENTION SYSTEM
PR MH, TY A, 8'Ø W/ TY 1 CL (STD 604001)
FLAT SLAB TOP (STD 604001)
TG = 665.08
FL = 659.06 (FIELD VERIFY)

7 — STA 1013+76.0 RT (26.5° RT AH)
PR PIPE CULVERT (CL A), TY 2, 36" X 6'
USFL = 659.76, STA 1013+98.2, 36.2' RT
DSFL = 659.66, STA 1013+94.5, 31.5' RT
PRE REINF CONC END SECTION, 36" (STD 542301)
TRENCH BACKFILL = 7.9 CU YD

9 — STA 1014+30.0, 28.3' RT
PR PIPE CULVERT (CL D), TY 2, 18" X 50'
METAL END SECTIONS, 1 EACH (STD 542401)
USFL = 663.23, STA 1014+46.0, 28.3' RT
DSFL = 661.00, STA 1013+96.0, 28.3' RT

BM #N-33: NGS DISK SET IN TOP OF BOX CULVERT UNDER HWY IL 9 & IL 94
NW QUAD IL 9 & RAILROAD CROSSING
STA 1013+40.86, 17.2' LT
ELEV 665.27

BUTT JOINT (SEE DETAIL)
VARIABLE DEPTH SURFACE COURSE (NO BINDER)
VARIABLE DEPTH MILLING TO MAINTAIN 1 1/2" SURFACE COURSE
PROPOSED PROFILE GRADE
EXISTING PROFILE GRADE
VPI STA 1014+55.00
ELEV = 665.54
175' V.C.
E = 0.85'
K = 45 (30MPH)
BEGIN BINDER COURSE
VPT STA 1015+42.50
ELEVATION 668.83
VPC STA 1016+45.00
ELEVATION 672.70
MATCH LINE STA 1016+00
VPC STA 1012+27.31
ELEVATION 666.22
STA 1012+47.31
VPC STA 1013+52.78
ELEVATION 666.14
VPC STA 1013+67.50
ELEVATION 665.62
STA 1013+80.86
STA 1014+22.61
STA 1014+41.48
-0.06%
-0.06%
-0.38%
+3.11%
BEGIN IMPROVEMENT STA 1012+27.31 ELEV = 666.22
PROFILE GRADE HAS BEEN INCREASED BY 3" TO ACCOUNT FOR RAILROAD GRADE INCREASE
LT 1014+50.00 ELEV 664.00
RT 1014+50.00 ELEV 663.40
RT 1013+96.00 ELEV 661.00
LT 1013+65.50 ELEV 660.50
LT +4.44%
RT +4.44%

1012+00	1012+50	1013+00	1013+50	1014+00	1014+50	1015+00	1015+50	1016+00	1016+50	1017+00	1017+50	1018+00
666.41	666.07 / 666.21	665.99 / 666.17	665.89 / 666.14	665.86 / 665.71	665.98 / 666.29	667.05 / 667.43	668.79 / 669.12	670.69 / 671.00	672.62 / 672.89	674.28 / 674.62	675.75 / 676.11	677.07 / 677.34

PLAN — SURVEYED / PLOTTED / ALIGNMENT CHECKED / RT. OF WAY CHECKED / CADD FILE NAME / NOTE BOOK NO. / BY / DATE

PROFILE — SURVEYED / PLOTTED / GRADES CHECKED / B.M. NOTED / STRUCTURE NOTAT'NS CH'KD / NOTE BOOK NO. / BY / DATE

FILE NAME = pw:\\IL084EBIDINTEG.illinois.gov:PWIDOT\Documents\IDOT Offices\District 6\Projects\D672C60\Contracts\72C60-sht-Plan11_IL 9.dgn	USER NAME = sparksgw	DESIGNED -	REVISED -
		DRAWN -	REVISED -
	PLOT SCALE = 40.0000 ' / in.	CHECKED -	REVISED -
	PLOT DATE = 10/23/2014	DATE -	REVISED -

STATE OF ILLINOIS
DEPARTMENT OF TRANSPORTATION

PLAN & PROFILE SHEET
FAP RTE 685 (IL 9)

SCALE: 1"=20' | SHEET NO. 11 OF 16 SHEETS | STA. 1012+00 TO STA. 1018+00

F.A.P RTE.	SECTION	COUNTY	TOTAL SHEETS	SHEET NO.
685/538	(112)RS-3, L, N, I	HANCOCK	156	55

CONTRACT NO. 72C60

FED. ROAD DIST. NO. 6 | ILLINOIS | FED. AID PROJECT

EXIST. CURVE A
PI STA. = 107+31.60
Δ = 85° 36′ 27″ (RT)
D = 9° 25′ 30″
R = 607.90′
T = 563.00′
L = 908.29′
E = 220.66′
e = 8.3%
P.C. STA. = 101+68.60
P.T. STA. = 110+76.89

EXIST. CURVE B
PI STA. = 107+31.60
Δ = 94° 23′ 33″ (LT)
D = 10° 59′ 19″
R = 521.41′
T = 563.00′
L = 859.01′
E = 245.95′
e = 8.3%
P.C. STA. = 101+68.60
P.T. STA. = 110+27.61

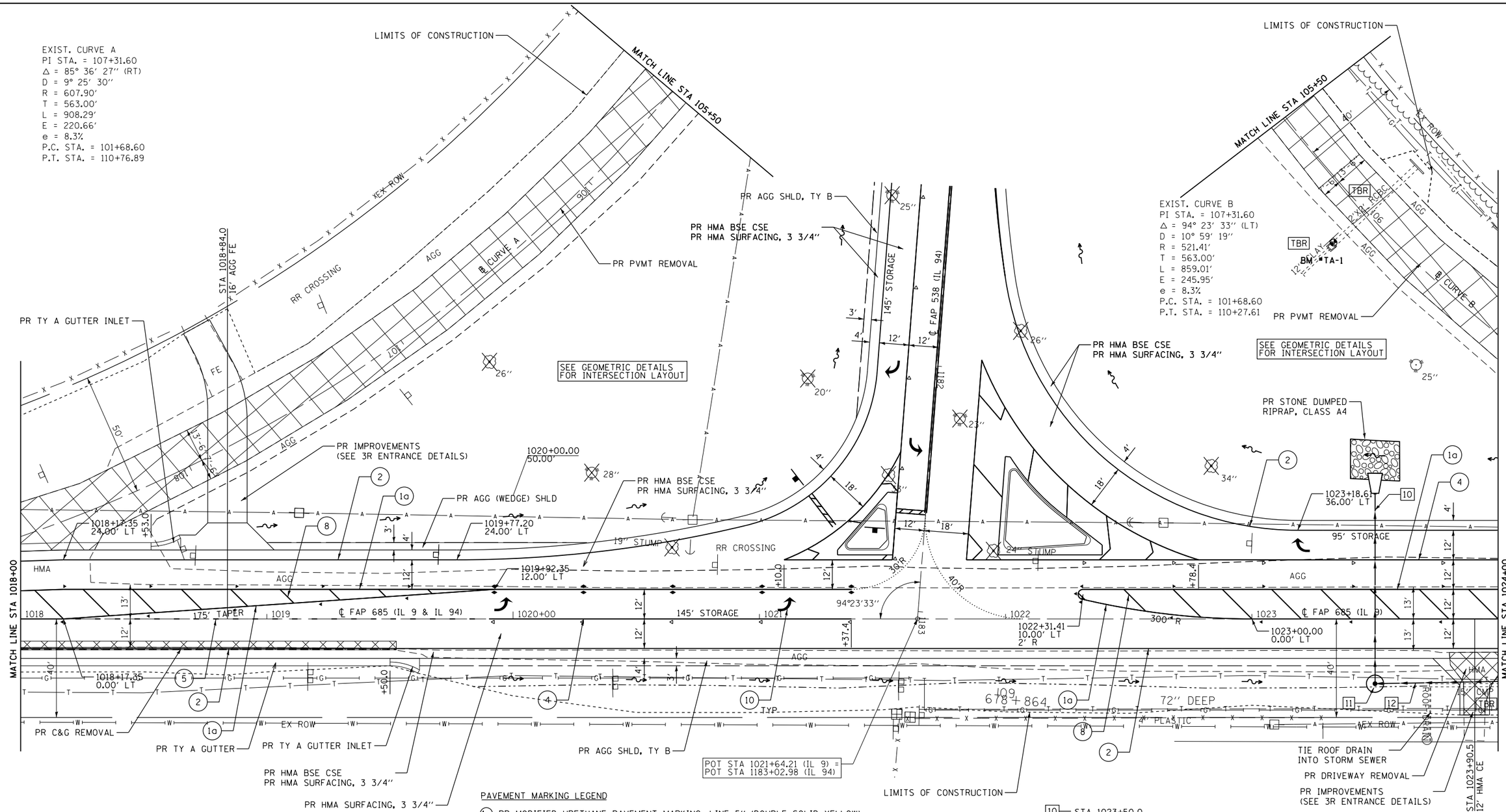

BM #TA-1: SET CHSLD " □ " CENTER OF W HDWL
UNDER E CURVE @ "Y" INT
IF HWY IL 9 & IL 94
STA 1023+33.08, 152.1′ LT
ELEV 675.54

PAVEMENT MARKING LEGEND

(1a) PR MODIFIED URETHANE PAVEMENT MARKING, LINE 5″ (DOUBLE SOLID YELLOW)
(2) PR MODIFIED URETHANE PAVEMENT MARKING, LINE 5″ (SOLID WHITE)
(3) PR MODIFIED URETHANE PAVEMENT MARKING, LINE 5″ (30′ SKIP, 10′ DASH WHITE)
(4) PR MODIFIED URETHANE PAVEMENT MARKING, LINE 6″ (SOLID WHITE)
(5) PR MODIFIED URETHANE PAVEMENT MARKING, LINE 6″ (6′ SKIP, 2′ DASH WHITE)
(6) PR MODIFIED URETHANE PAVEMENT MARKING, LINE 8″ (SOLID WHITE)
(7) PR MODIFIED URETHANE PAVEMENT MARKING, LINE 12″ (SOLID WHITE) (20′ TYP SPACING)
(8) PR MODIFIED URETHANE PAVEMENT MARKING, LINE 12″ (SOLID YELLOW) (20′ TYP SPACING)
(9) PR PREFORMED PLASTIC PAVEMENT MARKING, TYPE B (INLAID), LINE 24″ (SOLID WHITE)
(10) PR PREFORMED PLASTIC PAVEMENT MARKING, TYPE B (INLAID), LETTERS AND SYMBOLS (SOLID WHITE)
▷ PR RAISED REFLECTIVE PAVEMENT MARKERS, ONE-WAY CRYSTAL
▶ PR RAISED REFLECTIVE PAVEMENT MARKERS, ONE-WAY AMBER
◆ PR RAISED REFLECTIVE PAVEMENT MARKERS, TWO-WAY AMBER

10 — STA 1023+50.0
PR STORM SEWER (CL A), TY 2, 36″ X 74′
PRE REINF CONC END SECTION, 36″ (STD 542301)
USFL = 672.20, STA 1023+50.0, 23.0′ RT
DSFL = 672.05, STA 1023+50.0, 51.0′ LT
TRENCH BACKFILL = 38.6 CU YD

11 — STA 1023+50.0, 26.5′ RT
PR MH, TY A, 7′Ø W/ MED INLET 36″ (STD 604106)
FLAT SLAB TOP (STD 604001)
TG = 677.25
FL = 671.70

12 — PR STORM SEWER (CL A), TY 2, 24″ X 98′
USFL = 672.75, STA 1024+50.0, 24.5′ RT
DSFL = 672.20, STA 1023+50.0, 26.5′ RT
TRENCH BACKFILL = 18.2 CU YD

N

20 0 20 40
SCALE: 1″ = 20′

FILE NAME = pw:\\IL084EBIDINTEG.illinois.gov:PWIDOT\Documents\IDOT Offices\District 6\Projects\D672C60\DRAWINGS\KLINGNER\District edit\CADD Sheets\72C60-sht-Plan12_IL 9.dgn	USER NAME = sparksgw	DESIGNED -	REVISED -
		DRAWN -	REVISED -
	PLOT SCALE = 40.0000 ′ / in.	CHECKED -	REVISED -
	PLOT DATE = 10/23/2014	DATE -	REVISED -

STATE OF ILLINOIS
DEPARTMENT OF TRANSPORTATION

PLAN SHEET
FAP RTE 685 (IL 9)

SCALE: 1″=20′ | SHEET NO. 12 OF 16 SHEETS | STA. 1018+00 TO STA. 1024+00

F.A.P RTE.	SECTION	COUNTY	TOTAL SHEETS	SHEET NO.
685/538	(112)RS-3, L, N, I	HANCOCK	156	56
		CONTRACT NO. 72C60		
FED. ROAD DIST. NO. 6	ILLINOIS	FED. AID PROJECT		

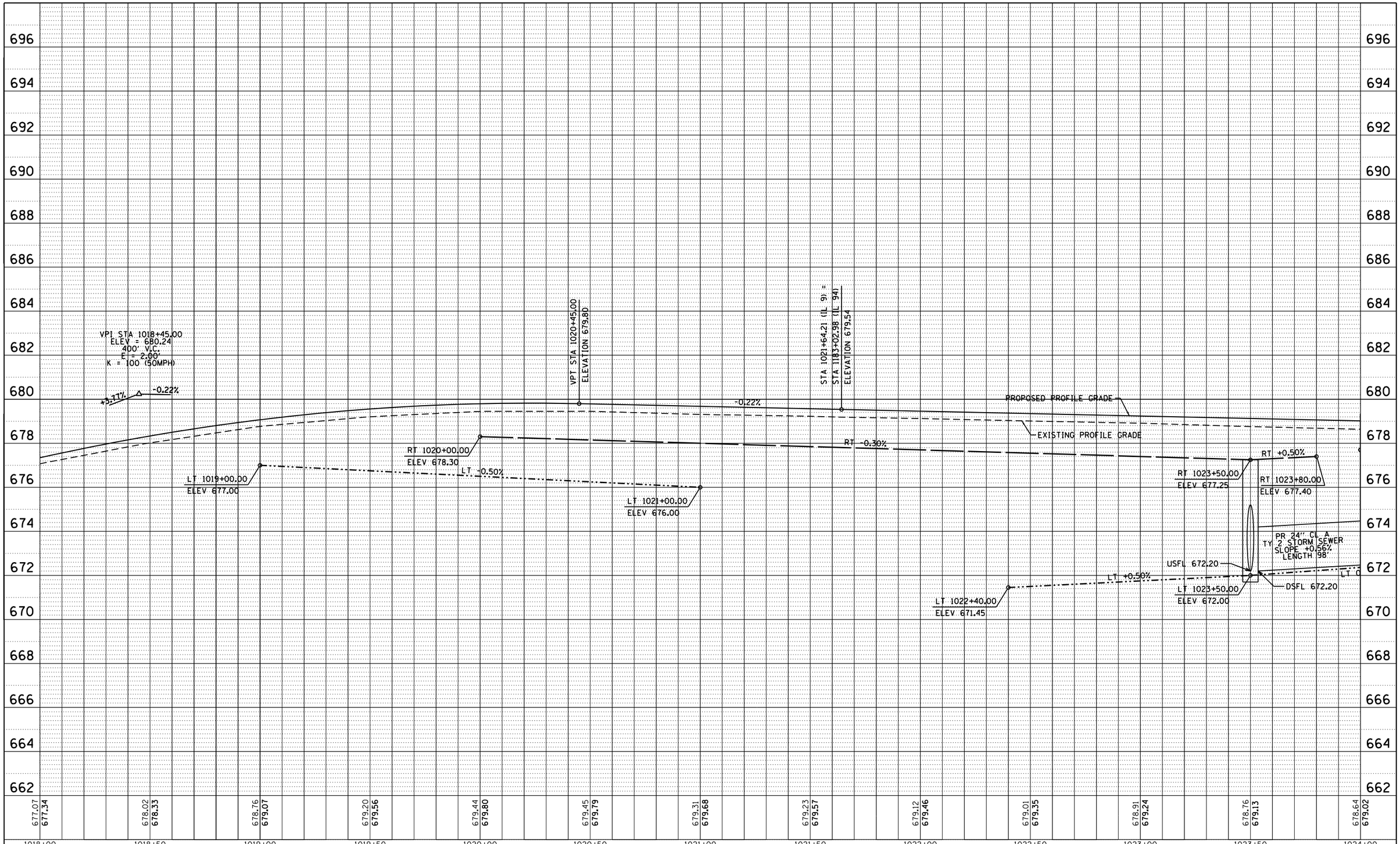

PLAN

		BY	DATE
SURVEYED			
PLOTTED			
ALIGNMENT CHECKED			
RT. OF WAY CHECKED			
CADD FILE NAME			
NOTE BOOK NO.			

PROFILE

		BY	DATE
SURVEYED			
PLOTTED			
GRADES CHECKED			
BM. NOTED			
STRUCTURE NOTAT'NS CHK'D			
NOTE BOOK NO.			

FILE NAME = pw:\\IL084EBIDINTEG.illinois.gov:PWIDOT\Documents\IDOT Offices\District 6\Projects\D672C60\PROFILES\KLINGNER\District edit\CADD Sheets\72C60-sht-Plan13_IL 9.dgn	USER NAME = sparksgw	DESIGNED -	REVISED -
		CHECKED -	REVISED -
	PLOT SCALE = 40.0000 ' / in.	DRAWN -	REVISED -
	PLOT DATE = 10/23/2014	CHECKED -	REVISED -

STATE OF ILLINOIS
DEPARTMENT OF TRANSPORTATION

PROFILE SHEET
FAP RTE (IL 9)

SCALE: 1"=20' | SHEET NO. 13 OF 16 SHEETS | STA. 1018+00 TO STA. 1024+00

F.A.P. RTE.	SECTION	COUNTY	TOTAL SHEETS	SHEET NO.
685/538	(112)RS-3, L, N, I	HANCOCK	156	57
		CONTRACT NO. 72C60		

FED. ROAD DIST. NO. | ILLINOIS | FED. AID PROJECT

EXIST. CURVE B
PI STA. = 107+31.60
Δ = 94° 23′ 33″ (LT)
D = 10° 59′ 19″
R = 521.41′
T = 563.00′
L = 859.01′
E = 245.95′
e = 8.3%
P.C. STA. = 101+68.60
P.T. STA. = 110+27.61

PAVEMENT MARKING LEGEND

(1a) PR MODIFIED URETHANE PAVEMENT MARKING, LINE 5″ (DOUBLE SOLID YELLOW)
(2) PR MODIFIED URETHANE PAVEMENT MARKING, LINE 5″ (SOLID WHITE)
(3) PR MODIFIED URETHANE PAVEMENT MARKING, LINE 5″ (30′ SKIP, 10′ DASH WHITE)
(4) PR MODIFIED URETHANE PAVEMENT MARKING, LINE 6″ (SOLID WHITE)
(5) PR MODIFIED URETHANE PAVEMENT MARKING, LINE 6″ (6′ SKIP, 2′ DASH WHITE)
(6) PR MODIFIED URETHANE PAVEMENT MARKING, LINE 8″ (SOLID WHITE)
(7) PR MODIFIED URETHANE PAVEMENT MARKING, LINE 12″ (SOLID WHITE) (20′ TYP SPACING)
(8) PR MODIFIED URETHANE PAVEMENT MARKING, LINE 12″ (SOLID YELLOW) (20′ TYP SPACING)
(9) PR PREFORMED PLASTIC PAVEMENT MARKING, TYPE B (INLAID), LINE 24″ (SOLID WHITE)
(10) PR PREFORMED PLASTIC PAVEMENT MARKING, TYPE B (INLAID), LETTERS AND SYMBOLS (SOLID WHITE)
▷ PR RAISED REFLECTIVE PAVEMENT MARKERS, ONE-WAY CRYSTAL
▶ PR RAISED REFLECTIVE PAVEMENT MARKERS, ONE-WAY AMBER
◆ PR RAISED REFLECTIVE PAVEMENT MARKERS, TWO-WAY AMBER

EXIST. CURVE 456
PI STA. = 1031+81.81
Δ = 0° 40′ 02″ (LT)
D = 0° 04′ 24″
R = 78,074.88′
T = 454.60′
L = 909.19′
E = 1.32′
e = N.C.
P.C. STA. = 1027+27.21
P.T. STA. = 1036+36.40

16 — STA 1026+92.8, 33.5′ LT
PR PIPE CULVERT (CL D), TY 1, 15″ X 36′
METAL END SECTIONS, 2 EACH (STD 542401)
USFL = 674.38, STA 1027+10.6, 33.5′ LT
DSFL = 674.27, STA 1026+74.6, 33.5′ LT

21 — STA 1028+83.5, 29.4′ LT
PR PIPE CULVERT (CL D), TY 1, 15″ X 40′
METAL END SECTIONS, 2 EACH (STD 542401)
USFL = 675.62, STA 1029+02.9, 29.3′ LT
DSFL = 675.32, STA 1028+62.9, 29.4′ LT

24 — STA 1029+42.2, 29.1′ LT
PR PIPE CULVERT (CL D), TY 1, 15″ X 36′
METAL END SECTIONS, 2 EACH (STD 542401)
USFL = 676.03, STA 1029+59.7, 29.0′ LT
DSFL = 675.77, STA 1029+23.7, 29.1′ LT

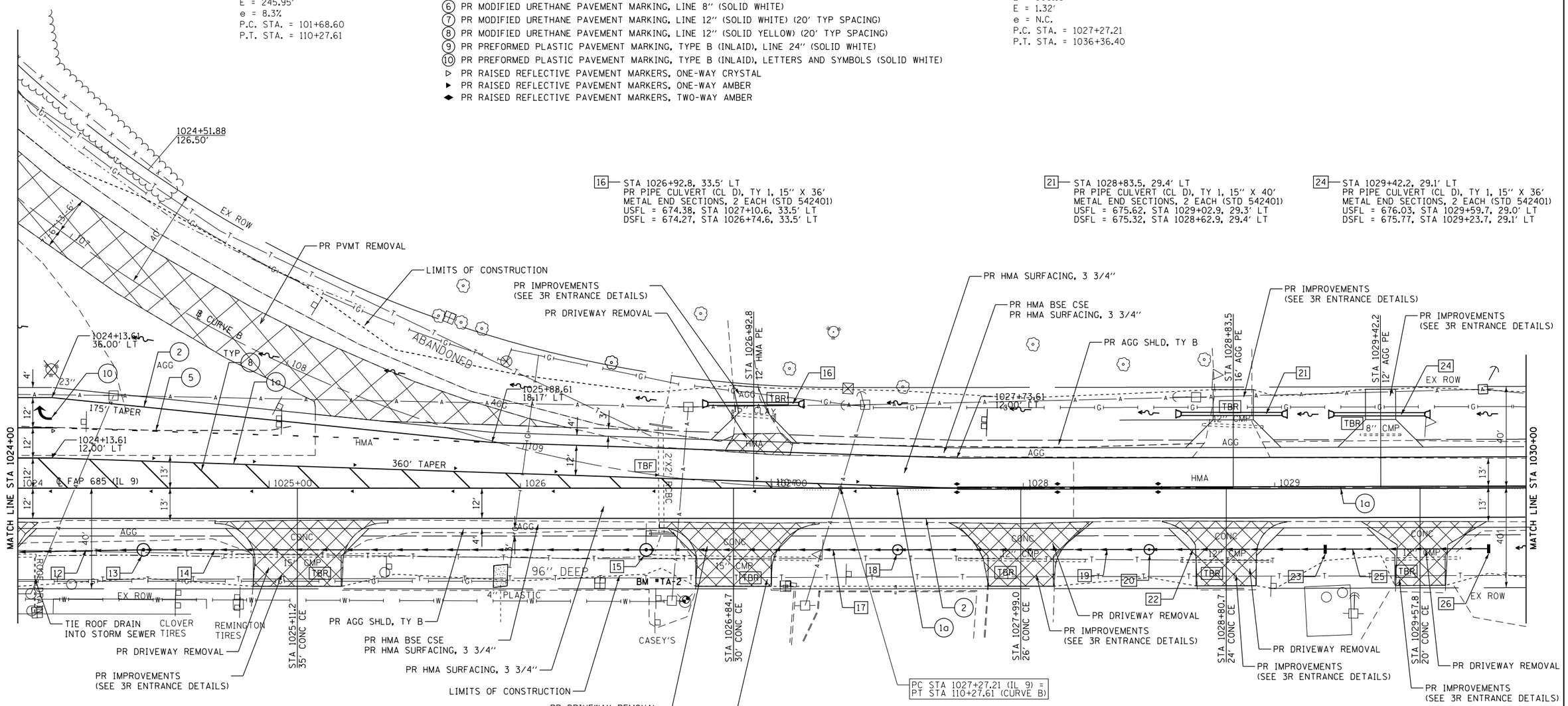

12 — PR STORM SEWER (CL A), TY 2, 24″ X 98′
USFL = 672.75, STA 1024+50.0, 24.5′ RT
DSFL = 672.20, STA 1023+50.0, 26.5′ RT
TRENCH BACKFILL = 18.2 CU YD

13 — STA 1024+50.0, 24.5′ RT
PR MH, TY A, 5′Ø W/ TY 8 GR (STD 604036)
FLAT SLAB TOP (STD 604001)
TG = 677.45
FL = 672.25

14 — PR STORM SEWER (CL A), TY 2, 24″ X 198′
USFL = 673.50, STA 1026+50.0, 24.5′ RT
DSFL = 672.75, STA 1024+50.0, 24.5′ RT
TRENCH BACKFILL = 30.1 CU YD

15 — STA 1026+50.0, 24.5′ RT
PR MH, TY A, 5′Ø W/ TY 8 GR (STD 604036)
FLAT SLAB TOP (STD 604001)
TG = 677.00
FL = 673.00

17 — PR STORM SEWER (CL A), TY 2, 24″ X 98′
USFL = 673.70, STA 1027+50.0, 24.5′ RT
DSFL = 673.50, STA 1026+50.0, 24.5′ RT
TRENCH BACKFILL = 12.6 CU YD

18 — STA 1027+50.0, 24.5′ RT
PR MH, TY A, 4′Ø W/ TY 8 GR (STD 604036)
FLAT SLAB TOP (STD 604001)
TG = 676.80
FL = 673.20

BM #TA-2: SET CHSLD "+" NE BOLT FH
NE COR CASEY'S GENERAL STORE
S SIDE OF HWY IL 9
STA 1026+65.8, 44.4′ RT
ELEV 681.02

19 — PR STORM SEWER (CL A), TY 2, 18″ X 98′
USFL = 674.15, STA 1028+50.0, 24.5′ RT
DSFL = 673.75, STA 1027+50.0, 24.5′ RT
TRENCH BACKFILL = 9.0 CU YD

20 — STA 1028+50.0, 24.5′ RT
PR MH, TY A, 4′Ø W/ TY 8 GR (STD 604036)
FLAT SLAB TOP (STD 604001)
TG = 676.70
FL = 673.65

22 — PR STORM SEWER (CL A), TY 2, 15″ X 68′
USFL = 674.70, STA 1029+20.0, 24.5′ RT
DSFL = 674.35, STA 1028+50.0, 24.5′ RT
TRENCH BACKFILL =6.6 CU YD

23 — STA 1029+20.0, 24.5′ RT
PR INLETS, TY B, W/ TY 8 GR (STD 604036)
FLAT SLAB TOP (STD 604001)
TG = 677.00
FL = 674.20

25 — PR STORM SEWER (CL A), TY 2, 12″ X 64′
USFL = 676.00, STA 1029+85.0, 24.5′ RT
DSFL = 675.00, STA 1029+20.0, 24.5′ RT
TRENCH BACKFILL = 4.1 CU YD

26 — STA 1029+85.0, 24.5′ RT
PR INLET, TY A, W/ TY 8 GR (STD 604036)
TG = 677.50
FL = 675.50

N

20 0 20 40
SCALE: 1″ = 20′

FILE NAME = pw:\\IL084EBIDINTEG.illinois.gov:PWIDOT\Documents\IDOT Offices\District 6\Projects\D672C60\Sheets\72C60-sht-Plan14_IL 9.dgn	USER NAME = sparksgw	DESIGNED -	REVISED -
		DRAWN -	REVISED -
	PLOT SCALE = 40.0000 ′ / in.	CHECKED -	REVISED -
	PLOT DATE = 10/23/2014	DATE -	REVISED -

STATE OF ILLINOIS
DEPARTMENT OF TRANSPORTATION

PLAN SHEET
FAP RTE 685 (IL 9)

SCALE: 1″=20′ | SHEET NO. 14 OF 16 SHEETS | STA. 1024+00 TO STA. 1030+00

F.A.P RTE.	SECTION	COUNTY	TOTAL SHEETS	SHEET NO.
685/538	(112)RS-3, L, N, I	HANCOCK	156	58
		CONTRACT NO. 72C60		

FED. ROAD DIST. NO. 6 | ILLINOIS | FED. AID PROJECT

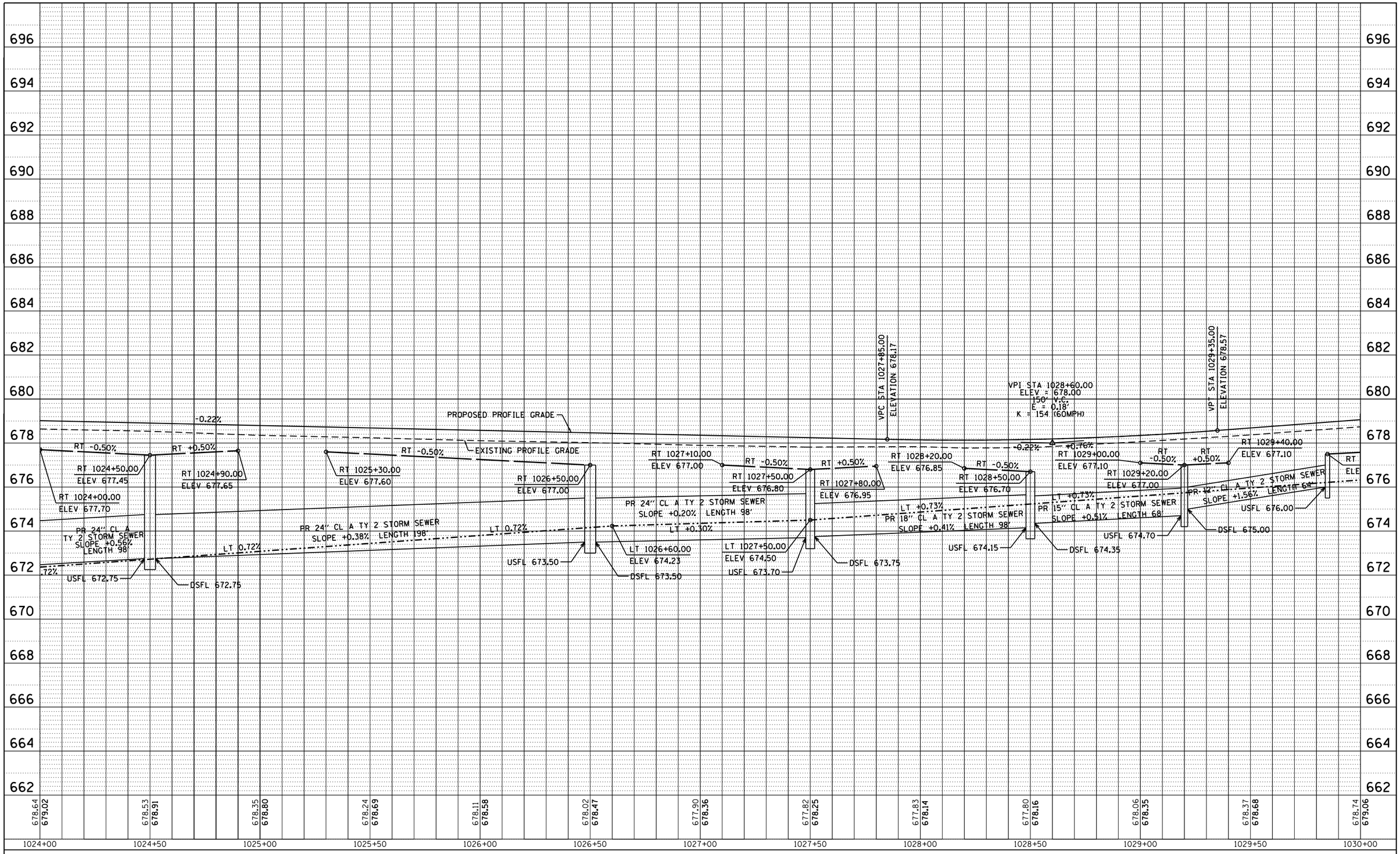

PLAN
SURVEYED
PLOTTED
DRAWN
ALIGNMENT CHECKED
RT. OF WAY CHECKED
CADD FILE NAME
NOTE BOOK NO.
BY
DATE

PROFILE
SURVEYED
PLOTTED
DRAWN
PROFILE CHECKED
B.M. NOTED
STRUCTURE NOTATINS CHKD
NOTE BOOK NO.
BY
DATE

FILE NAME = pw:\\IL084EBIDINTEG.illinois.gov:PWIDOT\Documents\IDOT Offices\District 6\Projects\D672C60\PROFILE\KLINGNER\District edit\CADD Sheets\72C60-sht-Plan15_IL 9.dgn	USER NAME = sparksgw	DESIGNED -	REVISED -
		CHECKED -	REVISED -
	PLOT SCALE = 40.0000 ' / in.	DRAWN -	REVISED -
	PLOT DATE = 10/23/2014	CHECKED -	REVISED -

STATE OF ILLINOIS
DEPARTMENT OF TRANSPORTATION

PROFILE SHEET
FAP RTE (IL 9)

SCALE: 1"=20' | SHEET NO. 15 OF 16 SHEETS | STA. 1024+00 TO STA. 1030+00

F.A.P. RTE.	SECTION	COUNTY	TOTAL SHEETS	SHEET NO.
685/538	(112)RS-3, L, N, I	HANCOCK	156	59
		CONTRACT NO. 72C60		

FED. ROAD DIST. NO. | ILLINOIS | FED. AID PROJECT

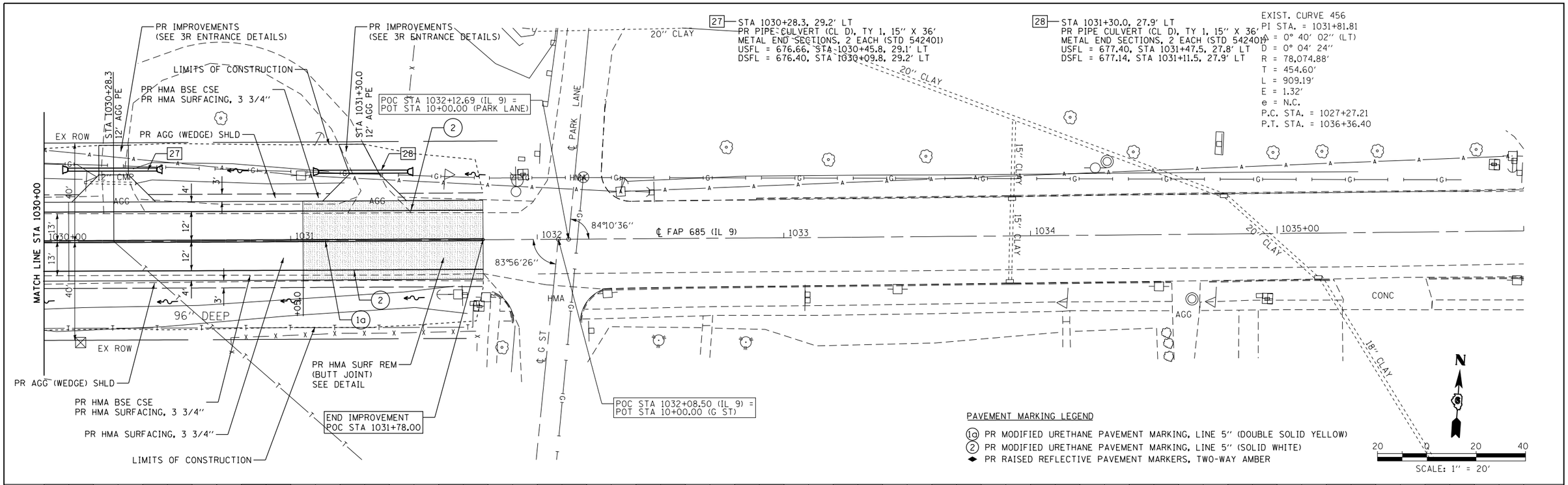

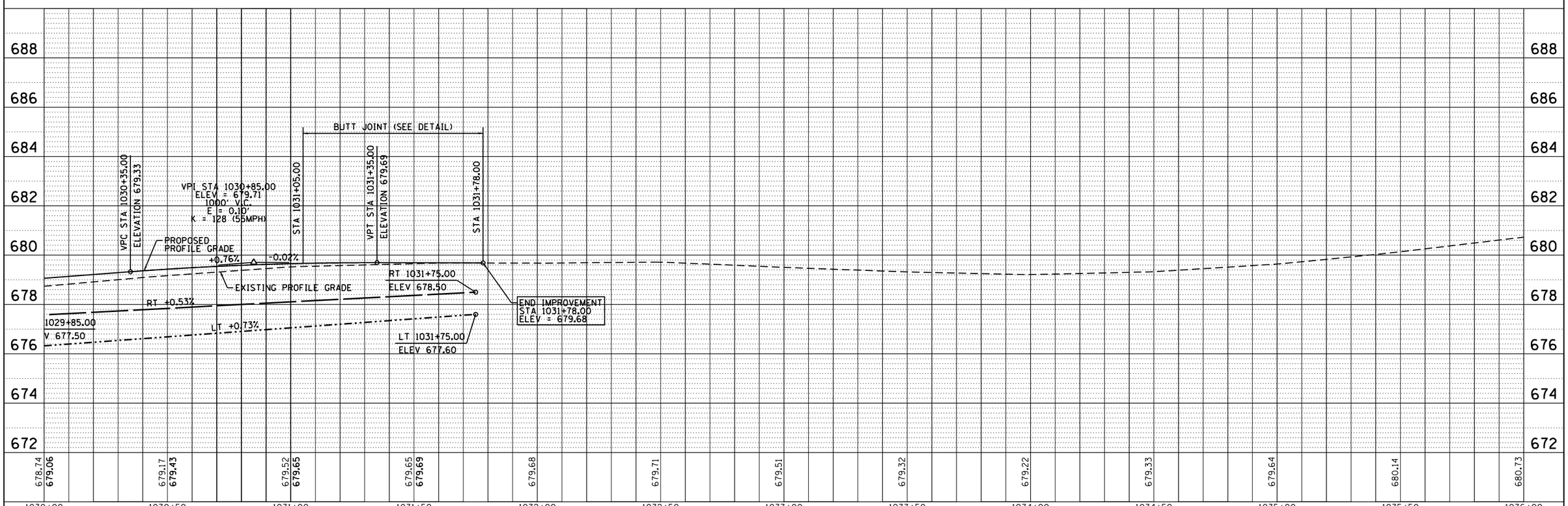

FILE NAME = pw:\\IL084EBIDINTEG.illinois.gov:PWIDOT\Documents\IDOT Offices\District 6\Projects\D672C60\DRAWINGS\KLINGNER\District edits\CADD Sheets\72C60-sht-Plan16_IL 9.dgn	USER NAME = sparksgw	DESIGNED -	REVISED -
		DRAWN -	REVISED -
	PLOT SCALE = 40.0000 ' / in.	CHECKED -	REVISED -
	PLOT DATE = 10/23/2014	DATE -	REVISED -

STATE OF ILLINOIS
DEPARTMENT OF TRANSPORTATION

PLAN & PROFILE SHEET
FAP RTE 685 (IL 9)

SCALE: 1"=20' | SHEET NO. 16 OF 16 SHEETS | STA. 1030+00 TO STA. 1036+00

F.A.P RTE.	SECTION	COUNTY	TOTAL SHEETS	SHEET NO.
685/538	(112)RS-3, L, N, I	HANCOCK	156	60

CONTRACT NO. 72C60

FED. ROAD DIST. NO. 6 | ILLINOIS | FED. AID PROJECT

PLAN: SURVEYED / PLOTTED / ALIGNMENT CHECKED / RT. OF WAY CHECKED / CADD FILE NAME / NOTE BOOK NO. ____ / BY / DATE

PROFILE: SURVEYED / PLOTTED / GRADES CHECKED / BM. NOTED / STRUCTURE NOTATNS CHKD / NOTE BOOK NO. ____ / BY / DATE

FILE NAME = pw:\\IL084EBIDINTEG.illinois.gov:PWIDOT\Documents\IDOT Offices\District 6\Projects\D672C60\DRAWING Data\KLINGNER\District edit\CADD SHEETS\72C60-sht-Shoulder_Plan.dgn	USER NAME = sparksgw	DESIGNED -	REVISED -
	PLOT SCALE = 100.0000 ' / in.	CHECKED -	REVISED -
Default	PLOT DATE = 10/23/2014	DATE -	REVISED -

STATE OF ILLINOIS
DEPARTMENT OF TRANSPORTATION

PLAN SHEET FAP RTE 685 (IL 9)

SCALE: | SHEET OF SHEETS | STA. TO STA.

F.A.P. RTE.	SECTION	COUNTY	TOTAL SHEETS	SHEET NO.
685/538	(112)RS-3,L,N,I	HANCOCK	156	61
		CONTRACT NO. 72C60		
		ILLINOIS FED. AID PROJECT		

FILE NAME = pw:\\IL084EBIDINTEG.illinois.gov:PWIDOT\Documents\IDOT Offices\District 6\Projects\D672C60\DRAWING\KLINGNER\District edit\CADD Shared\72C60-sht-Shoulder_Plan.dgn	USER NAME = sparksgw	DESIGNED -	REVISED -
	PLOT SCALE = 100.0000 ' / in.	CHECKED -	REVISED -
Default	PLOT DATE = 10/23/2014	DATE -	REVISED -

STATE OF ILLINOIS
DEPARTMENT OF TRANSPORTATION

PLAN SHEET FAP RTE 685 (IL 9)

SCALE: | SHEET OF SHEETS | STA. TO STA.

F.A.P. RTE.	SECTION	COUNTY	TOTAL SHEETS	SHEET NO.
685/538	(112)RS-3,L,N,I	HANCOCK	156	62
		CONTRACT NO. 72C60		
		ILLINOIS FED. AID PROJECT		

FILE NAME = pw:\\IL084EBIDINTEG.illinois.gov:PWIDOT\Documents\IDOT Offices\District 6\Projects\D672C60\DRAWING\KLINGNER\District edit\CADD SHEETS\72C60-sht-Shoulder_Plan.dgn	USER NAME = sparksgw	DESIGNED -	REVISED -
	PLOT SCALE = 100.0000 ' / in.	CHECKED -	REVISED -
Default	PLOT DATE = 10/23/2014	DATE -	REVISED -

STATE OF ILLINOIS
DEPARTMENT OF TRANSPORTATION

PLAN SHEET FAP RTE 685 (IL 9)

SCALE: SHEET OF SHEETS STA. TO STA.

F.A.P. RTE.	SECTION	COUNTY	TOTAL SHEETS	SHEET NO.
685/538	(112)RS-3,L,N,I	HANCOCK	156	63
		CONTRACT NO. 72C60		
		ILLINOIS FED. AID PROJECT		

47 — STA. 1172+34 RT
PR CONCRETE COLLAR (SEE DETAIL)
PR PIPE CULVERT (CL A), TY 2, 30" X 6.8'
PRC FLARED END SECTION, 30" (STD 542301), 1 EACH
SLOPE TO MATCH EX GROUND
CUT PIPE TO FIT FLUSH AGAINST EX CULVERT

0 50 100 150
SCALE IN FEET

FILE NAME = pw:\\IL084EBIDINTEG.illinois.gov:PWIDOT\Documents\IDOT Offices\District 6\Projects\D672C60\DRAWINGS\	USER NAME = sparksgw	DESIGNED -	REVISED -
		CHECKED -	REVISED -
Default	PLOT SCALE = 100.0000 ' / in.	DATE -	REVISED -
	PLOT DATE = 10/23/2014		

STATE OF ILLINOIS
DEPARTMENT OF TRANSPORTATION

PLAN SHEET FAP RTE 685 (IL 9)

SCALE: SHEET OF SHEETS STA. TO STA.

F.A.P. RTE.	SECTION	COUNTY	TOTAL SHEETS	SHEET NO.
685/538	(112)RS-3,L,N,I	HANCOCK	156	64

CONTRACT NO. 72C60

ILLINOIS FED. AID PROJECT

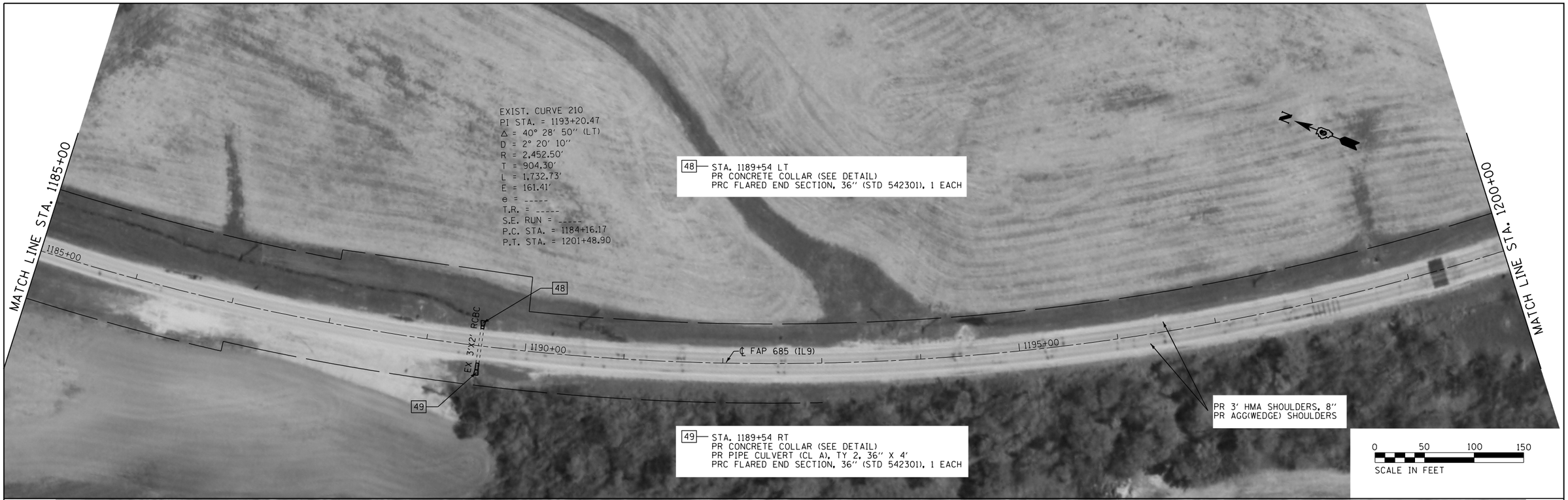

FILE NAME = pw:\\IL084EBIDINTEG.illinois.gov:PWIDOT\Documents\IDOT Offices\District 6\Projects\D672C60\DRAWING\District edit\CADD SHEETS\72C60-sht-Shoulder_Plan.dgn	USER NAME = sparksgw	DESIGNED -	REVISED -
	PLOT SCALE = 100.0000 ′ / in.	CHECKED -	REVISED -
Default	PLOT DATE = 10/23/2014	DATE -	REVISED -

STATE OF ILLINOIS
DEPARTMENT OF TRANSPORTATION

PLAN SHEET FAP RTE 685 (IL 9)

SCALE: SHEET OF SHEETS STA. TO STA.

F.A.P. RTE.	SECTION	COUNTY	TOTAL SHEETS	SHEET NO.
685/538	(112)RS-3,L,N,I	HANCOCK	156	65
		CONTRACT NO. 72C60		
		ILLINOIS FED. AID PROJECT		

FILE NAME = pw:\\IL084EBIDINTEG.illinois.gov:PWIDOT\Documents\IDOT Offices\District 6\Projects\D672C60\DRAWING\KLINGNER\District edit\CADD SHEETS\72C60-sht-Shoulder_Plan.dgn	USER NAME = sparksgw	DESIGNED -	REVISED -
	PLOT SCALE = 100.0000 ' / in.	CHECKED -	REVISED -
Default	PLOT DATE = 10/23/2014	DATE -	REVISED -

STATE OF ILLINOIS
DEPARTMENT OF TRANSPORTATION

PLAN SHEET FAP RTE 685 (IL 9)

SCALE: | SHEET OF SHEETS | STA. TO STA.

F.A.P. RTE.	SECTION	COUNTY	TOTAL SHEETS	SHEET NO.
685/538	(112)RS-3,L,N,I	HANCOCK	156	66
		CONTRACT NO. 72C60		
		ILLINOIS FED. AID PROJECT		

FILE NAME = pw:\\IL084EBIDINTEG.illinois.gov:PWIDOT\Documents\IDOT Offices\District 6\Projects\D672C60\DRAWING\District edit\CADD Sheets\72C60-sht-Shoulder_Plan.dgn	USER NAME = sparksgw	DESIGNED -	REVISED -
	PLOT SCALE = 100.0000 ' / in.	CHECKED -	REVISED -
Default	PLOT DATE = 10/23/2014	DATE -	REVISED -

STATE OF ILLINOIS
DEPARTMENT OF TRANSPORTATION

PLAN SHEET FAP RTE 685 (IL 9)

SCALE: | SHEET OF SHEETS | STA. TO STA.

F.A.P. RTE.	SECTION	COUNTY	TOTAL SHEETS	SHEET NO.
685/538	(112)RS-3,L,N,I	HANCOCK	156	67
		CONTRACT NO. 72C60		
		ILLINOIS FED. AID PROJECT		

STORM WATER POLLUTION PREVENTION PLAN

Route: FAP 685/538 Marked: IL 94 / IL 9

Section: (112)RS-3, L, N, I Project No.: NA

County: HANCOCK Contract No. 72C60

This plan has been prepared to comply with the provision of the NPDES Permit Number ILR10_____ issued by the Illinois Environmental Protection Agency for storm water discharges from construction site activities.

I certify under penalty of law that this document and all attachments were prepared under my direction or supervision in accordance with a system designed to assure that qualified personnel gathered and evaluated the information submitted. Based on my inquire of the person or persons who manage the system, or those persons directly responsible for gathering the information submitted, is, to the best of my knowledge and belief, true, accurate, and complete. I am aware that there are significant penalties for submitting false information, including the possibility of fine and imprisonment for knowing violations.

(Signature) (Date) 10-24-14

Region 4 Engineer
(Title)

Note: The above boxed in area will be filled out by IDOT - Construction after the award of the contract to obtain the required NPDES permit.

The following plan was established and included in these plans to direct the Contractor in the placement of temporary erosion control systems and to provide a storm water pollution prevention plan for compliance under NPDES. The Contractor shall abide to all requirements within this plan as part of the contract.

The purpose of this plan is to prevent / minimize siltation within the construction zone and to eliminate sediments from entering and leaving the construction zone by utilizing proper temporary erosion control systems and providing ground cover within a reasonable time.

Certain items, as shown in this plan and referenced by the legend, shall be placed by the Contractor at the beginning of construction. Other items shall be placed by the Contractor as directed by the Engineer on a case by case situation resulting from the Contractor's sequence of activities, time of the year, and expected weather conditions.

The Contractor shall place permanent erosion control systems and seeding within a reasonable amount of time; therefore, reducing the amount of area being open to the possibility of erosion and reducing the amount of temporary erosion control systems and temporary seeding. The Resident Engineer will determine if temporary erosion control systems shown in the plan can be deleted, the size of the proposed ditch checks, the proper method of installation, and if any additional temporary erosion control systems shall be added which are not included in this plan. The Contractor shall perform all work as directed by the Engineer and as shown in special details and in Standard 280001 of the plans.

All disturbed areas having high potential for erosion, as determined by the Engineer, shall be temporarily seeded or permanently seeded by October 1, and shall not be reopened until after the winter shutdown period.

SITE DESCRIPTION

Description of Construction Activity:

1. The proposed project consists of the removal of the existing wye intersection and the construction of a new tee intersection at the junction of IL 94 and IL 9 on the west edge of LaHarpe, Illinois. Project also includes 3.7 miles of resurfacing IL 94 from the intersection north to the Hancock / Henderson County line shoulder construction on IL 9 from 6th Street in LaHarpe to the McDonough County line. Additional work includes culvert replacements and grading of steep slopes.

Description of Intended Sequence of Major Construction Activities Which Will Disturb Earth and Lead to Possible Erosion for Major Portions of the Construction Site:

1. Excavation will be completed to grade out for proposed roadway ditches and waterways, and to lower the existing ground elevation to meet the proposed roadway grade/vertical alignment.
2. Embankment will be completed in fill areas to raise the existing ground elevation to meet the proposed roadway grade/vertical alignment.
3. Drainage structures will be installed before and/or during the construction of the excavation and embankment to allow proper drainage across the proposed four lane facility.
4. Placement, maintenance, removal and proper clean-up of temporary erosion control, such as erosion control fence, hay or straw bale ditch checks, riprap ditch checks, sediment basins, temporary seeding, etc.
5. Placement of permanent erosion control, such as riprap ditch lining, riprap stilling basins, riprap dry dams, excelsior blanket, seeding, etc.
6. Final grading, paving and other miscellaneous items.
7. Stage construction of the above items will be required to maintain traffic as discussed previously herein.

Area of Construction Site:
The total drainage area entering and including the construction site is estimated to be 128 acres (0.2 square miles) in which 8 acres will be disturbed by excavation, grading or other activities.

Other Reports, Studies and Plans which Aid in the Development of this Storm Water Pollution Prevention Plan as Referenced Documents:

1. Estimated run-off coefficients are contained in the project drainage study which were utilized for proposed placement of the temporary erosion control systems.*
2. Information on the soils within the site was obtained from field reviews which were utilized for proposed placement of the temporary erosion control systems.*
3. Site maps indicating drainage patterns and approximate slopes were contained in the project design report, USGS drainage maps, project drainage study, and project plan documents were all utilized for proposed placement of the temporary erosion control systems.

Drainage Tributaries Receiving Water from this Construction Site:

1. South Branch of the LaMoine River

CONTROLS - EROSION CONTROLS AND SEDIMENT CONTROLS

Description of Stabilization Practices at the Beginning of Construction:

1. The area between the existing and proposed right-of-way/temporary easement boundaries and limits of the project will be improved and managed for the purposes of controlling erosion within the area, reducing water flow by temporary diversion and minimizing siltation into the construction zone, and establishing vegetative cover which will become permanent vegetation and act as an erosion barrier. Work at the beginning of construction will consist of the following:

   (a) Areas of existing vegetation (woods and grasslands) outside the proposed construction slope limits shall be identified for preserving and shall be protected from mowing, brush cutting, tree removal and other activities which would be detrimental to their maintenance and development.

   (b) Dead, diseased, or unsuitable vegetation within the site shall be removed as directed by the Engineer, along with required tree removal.

   (c) As soon as reasonable access is available (such as trees cleared) to all locations where water drains away from the project, sediment basins, riprap ditch checks, temporary ditch checks, and/or erosion control fence shall be installed as called out in this plan and directed by the Engineer.

   (d) Bare and sparsely vegetated ground in highly erodable areas as determined by the Engineer shall be temporarily seeded at the beginning of construction where no construction activities are immediately expected as stated in the special provision "Temporary Erosion Control Seeding".

   (e) Immediately after tree removal is completed in certain areas which are highly erodable areas as determined by the Engineer, the areas shall be temporarily seeded where no construction activities are immediately expected as stated in the special provision •Temporary Erosion Control Seeding•.

   (f) At locations where a significant amount of water drains into the construction zone from outside areas (adjacent landowners), erosion control fence, temporary ditch checks, or riprap ditch checks will be utilized to locally divert water, reduce flow rates, and collect outside siltation inside the right-of-way line. Erosion control items will not be allowed to be installed to cause flooding to upstream private property which could cause crop damages or other undesirable conditions.

2. Establishment of these temporary erosion control measures will have additional benefits to the project. Desirable grass seed will become established in these areas and will spread seeds onto the construction site until permanent seeding/mowing and overseeding can be complete.

3. A third benefit of these filter areas is that they will begin to provide a screen and buffer. They will help protect the construction site from winds and excess sun and mitigate construction noise and dust.

Description of Stabilization Practices During Construction:

1. During roadway construction, areas outside the construction slope limits as outlined previously herein shall be protected from damaging effects of construction. The Contractor shall not use this area for staging (except as designated on the plans or directed by the Engineer), parking of vehicles or construction equipment, storage of materials, or other construction related activities.
   (a) Within the construction zone, critical areas which have high flows of water as determined by the Engineer shall remain undisturbed until full scale construction is underway to prevent unnecessary soil erosion.
   (b) Top soil and earth stockpiles shall be temporarily seeded if they are to remain unused for more than fourteen days.
   (c) As the Contractor constructs a portion of roadway in a fill section, he/she shall follow the following steps as directed by the Engineer:

   i. Place temporary erosion control systems at locations where water leaves and enters the construction zone
   ii. Temporarily seed highly erodable areas outside the construction slope limits
   iii. Construct roadside ditches and provide temporary erosion control systems
   iv. TemporarILy divert water around proposed culvert locations
   v. Build necessary embankment at culvert locations and then excavate and place culvert
   vi. Continue building up the embankment to the proposed grade while at the same time place permanent erosion control such as riprap ditch lining and conduct final shaping to the slopes

   (d) The Contractor shall immediately follow major earth moving operations with final grading equipment. After the major earth spread operation has moved to a new location, final grading shall be completed within fourteen days. If grading is not completed within fourteen days, all major earth moving operations will be stopped, as directed by the Engineer, until disturbed areas are final graded and seeded.

   (e) Excavated areas and embankments shall be permanently seeded when final graded. If not, they shall be temporarily seeded as stated in the special provision "Temporary Erosion Control Seeding".

   (f) Construction equipment shall be stored and fueled only at designated locations. All necessary measures shall be taken to contain any fuel or pollution run-off in compliance with EPA water quality regulations. Leaking equipment or supplies shall be immediately repaired or removed from the site.

   (g) Qualified personnel shall inspect the project at least every 7 calendar days and within 24 hours of the end of a storm that is 0.5 inches or greated as noted in BDE 2342.

   (h) Sediment collected during construction by the various temporary erosion control systems shall be disposed of on the site on a regular basis as directed by the Engineer.

   (i) The temporary erosion control systems shall be removed as directed by the Engineer after use is no longer needed or no longer functioning. The costs of this removal shall be included in the unit bid price for the various temporary erosion control pay iytems. No additional compensation will be allowed.

Description of Structural Practices After Final Grading:

1. Temporary erosion control systems shall be left in place with proper maintenance until permanent erosion control is in place and working properly and all proposed turf areas seeded and established with a proper stand.

2. Once permanent erosion control systems as proposed in the plans are functional and established, temporary items shall be removed, cleaned up, and disturbed turf reseeded. Temporary riprap ditch checks will be allowed to remain in place where approved by the Engineer.

Maintenance after Construction:

1. Construction is complete after acceptance is received at the final inspection.

2. Areas will be inspected on a regular basis by IDOT District 6 Bureau of Operations.

3. Maintenance crews will perform regular mowings to aid in keeping weeds down and establishing a good roadside seed stand.

4. Maintenance crews will also aid in any ditch lining maintenance or in any drainage problems.

5. All maintenance will be conducted at times when weather conditions will not cause site damage.

DOCUMENTATION

1. A report summarizing the scope of the inspection, name(s) and qualifications of personnel making the inspection, date(s) of the inspection, major observations relating to the implementation of this storm water pollution prevention plan, and actions taken in accordance with Section 4.b. shall be made and retained as part of the plan for at least three years after the date of inspection. The report shall be signed in accordance with part VI.G of the general permit.

2. If any violation of the provisions of this plan is identified during the conduct of the construction work covered by this plan, the Resident Engineer or Resident Technician shall complete and file an "Incident of Noncompliance (ION)" report for the identified violation. The Resident Engineer or Resident Technician shall use forms provided by the Illinois Environmental Protection Agency and shall include specific information on the noncompliance, actions which were taken to prevent any further causes of noncompliance, and a statement detailing any environmental impact which may have resulted from the noncompliance. All reports of noncompliance shall be signed by a responsible authority in accordance with Part VI.G. of the general permit. The report of noncompliance shall be mailed to the following address:

   Illinois Environmental Protection Agency
   Division of Water Pollution Control
   2200 Churchill Road, P.O. Box 19276
   Springfield, IL 62794-9276
   Attn: Compliance Assurance Section

CONTRACTOR CERTIFICATION STATEMENT

This certification statement is part of the Storm Water Pollution Plan for the project described below in accordance with NPDES Permit No. ILR10_____, issued by the Illinois Environmental Protection Agency on _____.

Route: FAP 685/538 Marked: IL 94 / IL 9

Section: (112)RS-3, L, N, I Project No.: NA

County: Hancock Contract # 72C60

I certify under penalty of law that I understand the terms of the general National Pollutant Discharge Elimination System (NPDES) permit that authorizes the storm water discharges associated with industrial activity from the construction site identified as part of this certification.

In addition, I have read and understand all of the information and requirements stated in the SWPPP for the above mentioned project: I have received copies of all appropriate maintenance procedures; and, I have provided all documentation required to be in compliance with Permit ILR10 and SWPPP and will provide timely updates to these documents as necessary.

Signature_____ Date_____

Title_____

Name of Firm_____

Street Address_____

City, State, Zip_____

Phone Number_____

Note: The above boxed in area shall be filled out by the Contractor after the award of the contract to obtain the required NPDES Permit from IEPA. This is a requirement for this contract.

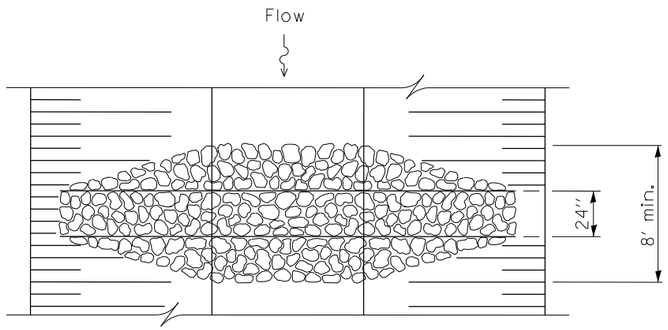

PLAN VIEW

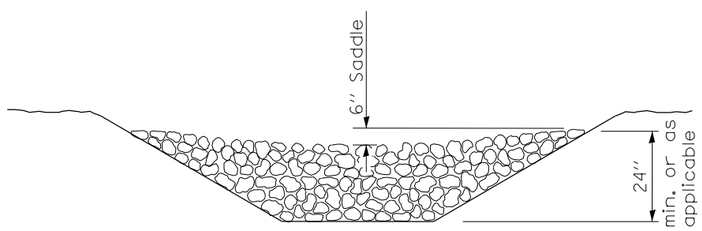

ELEVATION

TEMPORARY AGGREGATE DITCH CHECKS

(TYPICAL)

SEE STANDARD 280001 FOR EROSION CONTROL DETAILS NOT SHOWN.

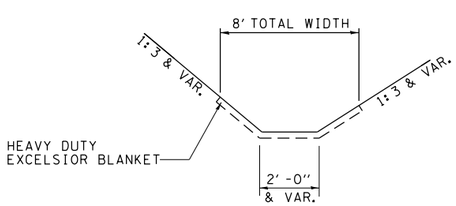

HEAVY DUTY EXCELSIOR BLANKET LIMITS

(TYPICAL)

LEGEND

(FOR THE STORM WATER POLLUTION PREVENTION PLAN SHEETS)

ITEM	SYMBOL
TEMPORARY DITCH CHECKS, AGGREGATE (STD 280001) [AGGREGATE DITCH CHECKS), 3.0 TONS PER EACH]	T
INLET AND PIPE PROTECTION (STD 280001) [HAY BALES NOT ALLOWED]	
PERIMETER EROSION BARRIER	
EARTH EXCAVATION FOR EROSION CONTROL (SEDIMENT BASINS)	
PRESERVE EXISTING TREES, WOODLANDS, AND UNDERSTORY (OUTSIDE CONSTRUCTION LIMITS)	
ITEM PLACED AT BEGINNING OF CONSTRUCTION (Requirement)	* ITEM *
ITEM PLACED AS DIRECTED BY ENGINEER (When required by situation)	ITEM
DIRECTION OF OVERLAND FLOW	
HEAVY DUTY EROSION CONTROL BLANKET	
ITEM PLACED DURING STAGE 1 CONSTRUCTION	1

GENERAL NOTES:

All items shall be constructed as shown on this sheet, on Standard 280001, and as directed by the Engineer.

Mulch shall be method 2, unless otherwise noted.

Aggregate ditch checks shall be paid for as "AGGREGATE DITCH CHECKS".

FILE NAME = pw:\\IL084EBIDINTEG.illinois.gov:PWIDOT\Documents\IDOT Offices\District 6\Projects\D672C60\DRAWINGS\KLINGNER\District edit\CADD Sheets\72C60-sht-erosl.dgn	USER NAME = sparksgw	DESIGNED -	REVISED -
		DRAWN -	REVISED -
	PLOT SCALE = 40.0000 ' / in.	CHECKED -	REVISED -
	PLOT DATE = 10/23/2014	DATE -	REVISED -

STATE OF ILLINOIS
DEPARTMENT OF TRANSPORTATION

EROSION AND SEDIMENT CONTROL LEGEND SHEET

SCALE: NONE | SHEET NO. 1 OF 1 SHEETS

F.A.P RTE.	SECTION	COUNTY	TOTAL SHEETS	SHEET NO.
685/538	(112)RS-3, L, N, I	HANCOCK	156	71
		CONTRACT NO. 72C60		

FED. ROAD DIST. NO. 6 | ILLINOIS | FED. AID PROJECT

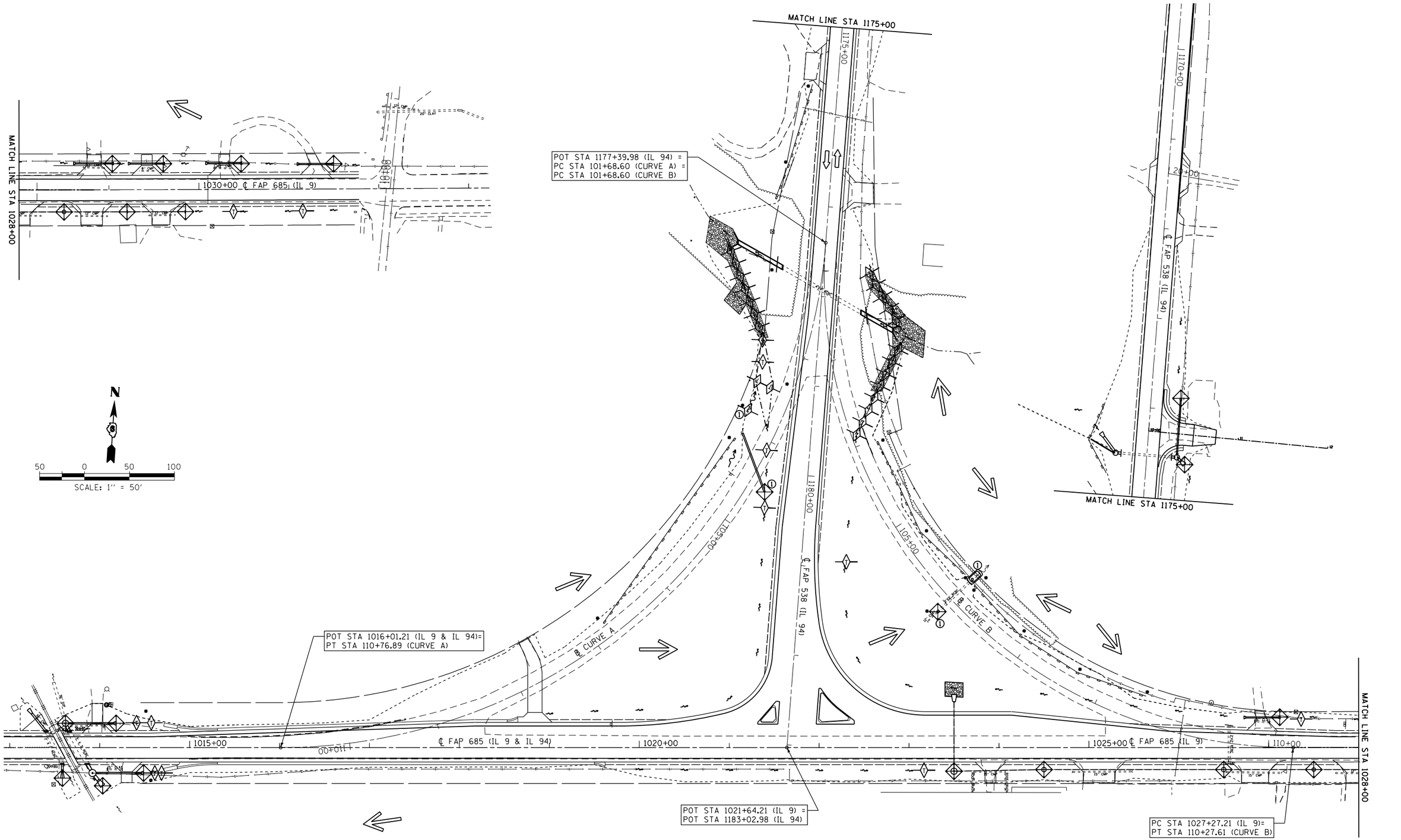

FILE NAME = pw:\\IL084EBIDINTEG.illinois.gov:PWIDOT\Documents\IDOT Offices\District 6\Projects\D672C60\DRAWING	USER NAME = sparksgw	DESIGNED -	REVISED -
		DRAWN -	REVISED -
	PLOT SCALE = 100.0000 ' / in.	CHECKED -	REVISED -
	PLOT DATE = 10/23/2014	DATE -	REVISED -

STATE OF ILLINOIS
DEPARTMENT OF TRANSPORTATION

EROSION AND SEDIMENT CONTROL

SCALE: 1"=50' | SHEET NO. 5 OF 5 SHEETS | STA. | TO STA.

F.A.P RTE.	SECTION	COUNTY	TOTAL SHEETS	SHEET NO.
685/538	(112)RS-3, L, N, I	HANCOCK	156	72
		CONTRACT NO. 72C60		

FED. ROAD DIST. NO. 6 | ILLINOIS | FED. AID PROJECT

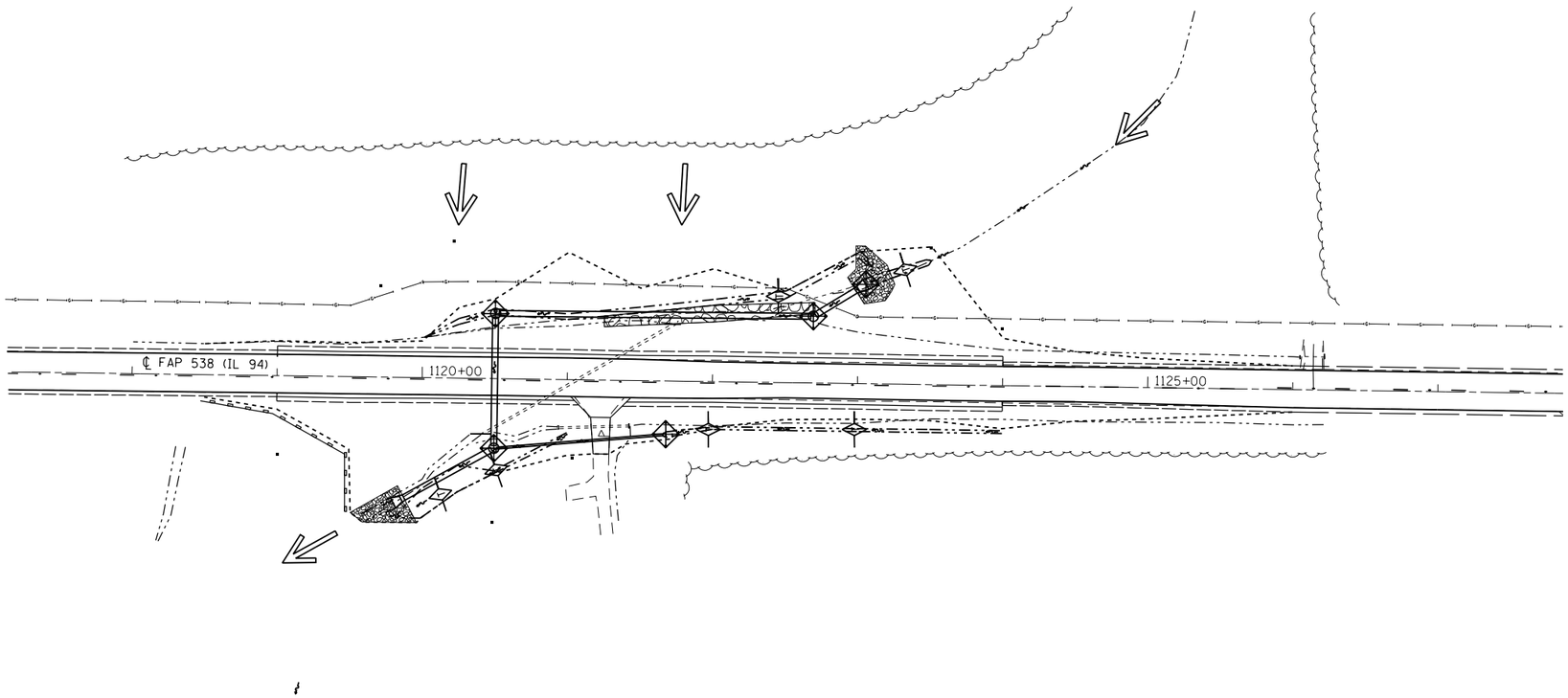

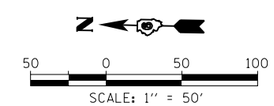

FILE NAME =	USER NAME = edwardsjd	DESIGNED -	REVISED -	STATE OF ILLINOIS DEPARTMENT OF TRANSPORTATION	EROSION AND SEDIMENT CONTROL	F.A.P RTE.	SECTION	COUNTY	TOTAL SHEETS	SHEET NO.
c:\pw_work\pwidot\edwardsjd\d0388419\D672C60-sht-eros2.dgn		DRAWN -	REVISED -			685/538	(112)RS-3, L, N, I	HANCOCK	156	73
	PLOT SCALE = 100.0000 ' / in.	CHECKED -	REVISED -					CONTRACT NO. 72C60		
	PLOT DATE = Mar-10-2015 02:58:34PM	DATE -	REVISED -		SCALE: SHEET NO. OF SHEETS STA. TO STA.	FED. ROAD DIST. NO. 6	ILLINOIS	FED. AID PROJECT		

add notes

9. No pole to be installed in the flowline of ditch. Pole setback to be increased if necessary as directed by the Engineer.

10. Stainless steel screen installed around breakaway couplings or anchor rods and nuts shall be according to Art. 1070.04(a)(2)c of the Standard Specifications exept the minimum wire diameter shall be AWG No. 16 (1.6 mm).

GENERAL LIGHTING NOTES

1. ALL PROPOSED LIGHTING UNITS SHALL BE LABELED ACCORDING TO THE STANDARD SPECIFICATIONS, WITH POLE NUMBERS ATTACHED WITH STAINLESS STEEL BANDING. LIGHTING UNIT NUMBERING SHALL BE AS DIRECTED BY THE ENGINEER.
2. CONTRACTOR SHALL BE RESPONSIBLE TO COORDINATE ELECTRICAL WORK WITH OTHER TRADES.
3. LIGHT POLE FOUNDATIONS SHALL BE INSTALLED PLUMB AND FLUSH WITH THE PROPOSED GRADE AND SHALL MEET THE HEIGHT REQUIREMENTS OF ARTICLE 836.03 OF THE STANDARD SPECIFICATIONS. AFTER UNIT DUCT IS INSTALLED, FOUNDATIONS, SHALL BE FILLED WITH FINE AGGREGATE ACCORDING TO ARTICLE 836.03. WASHERS USED TO INSTALL THE POLE SHALL BE LARGE ENOUGH TO FULLY COVER THE SLOTTED HOLES IN THE POLE BASE PLATE. THE VOIDS ON THE BOTTOM SIDE OF THE ALUMINUM POLE BASE MUST BE SEALED FROM RODENT ENTRY WITH STAINLESS STEEL SCREEN.
4. CONTRACTOR SHALL INSTALL LIGHT POLES AT THE LOCATIONS INDICATED ON THE PLANS, MAINTAINING ADEQUATE CLEARANCE FROM UTILITY LINES. CONTRACTOR SHALL BE RESPONSIBLE TO VERIFY CLEARANCES PER THE NATIONAL ELECTRICAL SAFETY CODE AND/OR THE REQUIREMENTS OF THE UTILITY COMPANIES. THE CONTRACTOR SHALL NOTIFY THE ENGINEER OF ALL CONFLICTS BETWEEN PROPOSED LIGHTING POLE LOCATIONS AND UTILITY LINES. THE LOCATION OF BURIED AND ABOVE GROUND UTILITIES SHOWN ARE APPROXIMATE AND ARE SHOWN FOR INFORMATION ONLY. REROUTING, DISCONNECTION, RELOCATION, PROTECTION ETC., OF ANY UTILITIES MUST BE COORDINATED BETWEEN THE CONTRACTOR, UTILITY COMPANY, AND OWNER. THE CONTRACTOR SHALL VERIFY THE EXACT LOCATION OF ALL UNDERGROUND UTILITIES PRIOR TO CONSTRUCTION.
5. THE CONTRACTOR IS RESPONSIBLE FOR UNCOVERING OR HAND DIGGING AROUND UTILITIES AS NECESSARY. THE COST OF THIS WORK IS TO BE INCLUDED WITH THE APPLICABLE UNDERGROUND CONDUIT OR UNIT DUCT PAY ITEM.
6. INSTALL HORIZONTAL MOUNT LUMINARIES PERPENDICULAR TO THE CENTERLINE OF THE ROADWAY AS REQUIRED BY ARTICLE 821.04 OF THE STANDARD SPECIFICATIONS.
7. UNDERGROUND CONDUIT, COILABLE NONMETALLIC CONDUIT SHALL BE SCHEDULE 80 AS NOTED IN THE PLANS.
8. TRAFFIC CONTROL AND PROTECTION, STANDARD 701501 SHALL BE UTILIZED WHEN WORKERS AND/OR THERE EQUIPMENT IS LOCATED WITHIN 8' FROM THE EDGE OF PAVEMENT AND AS DIRECTED BY THE ENGINEER.

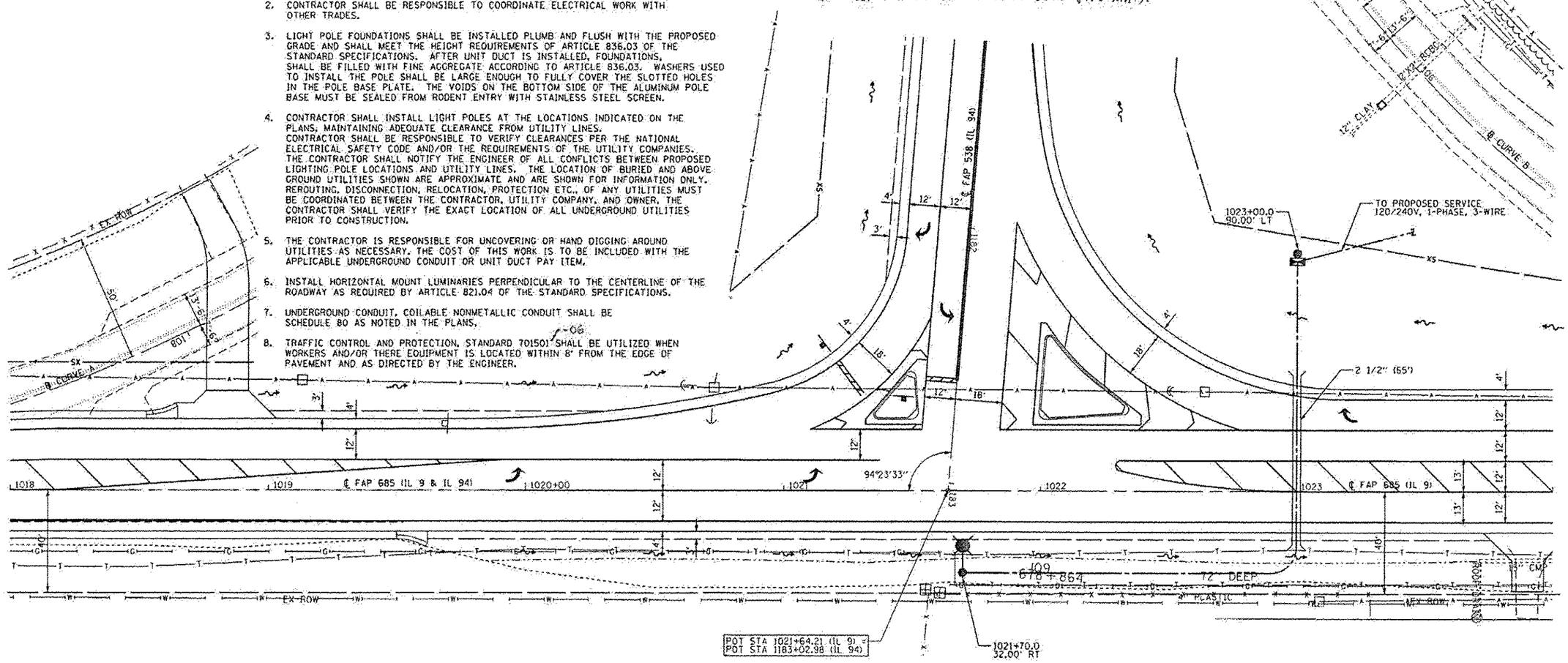

LIGHTING QUANTITIES

PAY ITEM NUMBER	PAY ITEM	UNIT	QUANTITY
80400100	ELECTRIC SERVICE INSTALLATION	EACH	1
81028760	UNDERGROUND CONDUIT, COILABLE NONMETALLIC CONDUIT, 2 1/2" DIA.	FOOT	65
81603010	UNIT DUCT, 600V, 2-1C NO. 10, 1/C NO. 10 GROUND, (XLP-TYPE USE), 3/4" DIA. POLYETHYLENE	FOOT	280
82102250	LUMINAIRE, SODIUM VAPOR, HORIZONTAL MOUNT, 250 WATT	EACH	1
82500300	LIGHTING CONTROLLER, POLE MOUNTED, 240VOLT, 30AMP	EACH	1
83003600	LIGHT POLE, ALUMINUM, 45 FT. M.H., 15 FT. DAVIT ARM	EACH	1
83600355	LIGHT POLE FOUNDATION, METAL, 15" BOLT CIRCLE, 8" X 6'	EACH	1
83800650	BREAKAWAY DEVICE, COUPLING WITH STAINLESS STEEL SCREEN	EACH	4

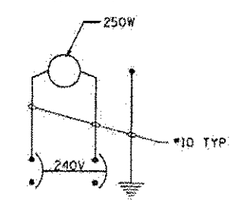

20 AMP, 2 POLE CIRCUIT BREAKER

WIRING DIAGRAM

LEGEND

- PROPOSED LIGHTING CONTROLLER, POLE MOUNTED, 240 VOLT, 30 AMP
- PROPOSED LIGHT POLE ALUMINUM, 45' MOUNTING HEIGHT 15' DAVIT ARM, 250 WATT HPS LUMINAIRE, M-C-3
- UNIT DUCT 600V, 2-1C NO. 10, 1C NO. 10 GROUND (XLP-TYPE USE), 3/4" DIA POLYETHYLENE
- PROPOSED COILABLE NONMETALIC CONDUIT, 2 1/2" DIA. SCHEDULE 80

N

20 0 20 40

SCALE: 1" = 20'

FILE NAME =	USER NAME = spenkage	DESIGNED -	REVISED -
pw:\\IL004EDIDINFEG.illinois.gov:PWIDOT\Documents\IDOT Offices\District 6\Projects\067	GRAYWOLDAre\ILENGNER\District wide\CADD	SHEET 2C60-sht-Lighting01.dgn	REVISED -
	PLOT SCALE = 40.0000 ' / in.	CHECKED -	REVISED -
	PLOT DATE = 10/23/2014	DATE -	REVISED -

STATE OF ILLINOIS
DEPARTMENT OF TRANSPORTATION

LIGHTING PLAN
FAP RTE 685 (IL 9) & FAP RTE 538 (IL 94)

SCALE: 1"=20' | SHEET NO. 1 OF 3 SHEETS | STA. TO STA.

F.A.P. RTE.	SECTION	COUNTY	TOTAL SHEETS	SHEET NO.
685/538	(112)RS-3, L, N, I	HANCOCK	156	74

CONTRACT NO. 72C60

FED. ROAD DIST. NO. 6 | ILLINOIS | FED. AID PROJECT

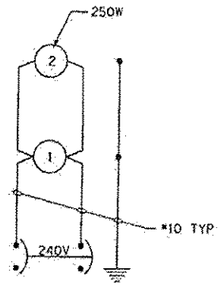

20 AMP, 2 POLE CIRCUIT BREAKER

WIRING DIAGRAM

LEGEND

- PROPOSED LIGHTING CONTROLLER, POLE MOUNTED, 240 VOLT, 30 AMP
- PROPOSED LIGHT POLE ALUMINUM, 45' MOUNTING HEIGHT 15' DAVIT ARM, 250 WATT HPS LUMINAIRE, M-C-3
- UNIT DUCT 600V, 2-1C NO. 10, 1C NO. 10 GROUND (XLP-TYPE USE), 3/4 " DIA POLYETHYLENE
- PROPOSED COILABLE NONMETALIC CONDUIT, 2 1/2" DIA, SCHEDULE 80

LIGHTING QUANTITIES

PAY ITEM NUMBER	PAY ITEM	UNIT	QUANTITY
80400100	ELECTRIC SERVICE INSTALLATION	EACH	1
81028760	UNDERGROUND CONDUIT, COILABLE NONMETALLIC CONDUIT, 2 1/2" DIA.	FOOT	80
81603010	UNIT DUCT, 600V, 2-1C NO.10, 1/C NO.10 GROUND, (XLP-TYPE USE), 3/4" DIA. POLYETHYLENE	FOOT	370
82102250	LUMINAIRE, SODIUM VAPOR, HORIZONTAL MOUNT, 250 WATT	EACH	2
82500300	LIGHTING CONTROLLER, POLE MOUNTED, 240VOLT, 30AMP	EACH	1
83003600	LIGHT POLE, ALUMINUM, 45 FT, M.H., 15 FT. DAVIT ARM	EACH	2
83600355	LIGHT POLE FOUNDATION, METAL, 15" BOLT CIRCLE, 8" X 6'	EACH	2
83800650	BREAKAWAY DEVICE, COUPLING WITH STAINLESS STEEL SCREEN	EACH	4

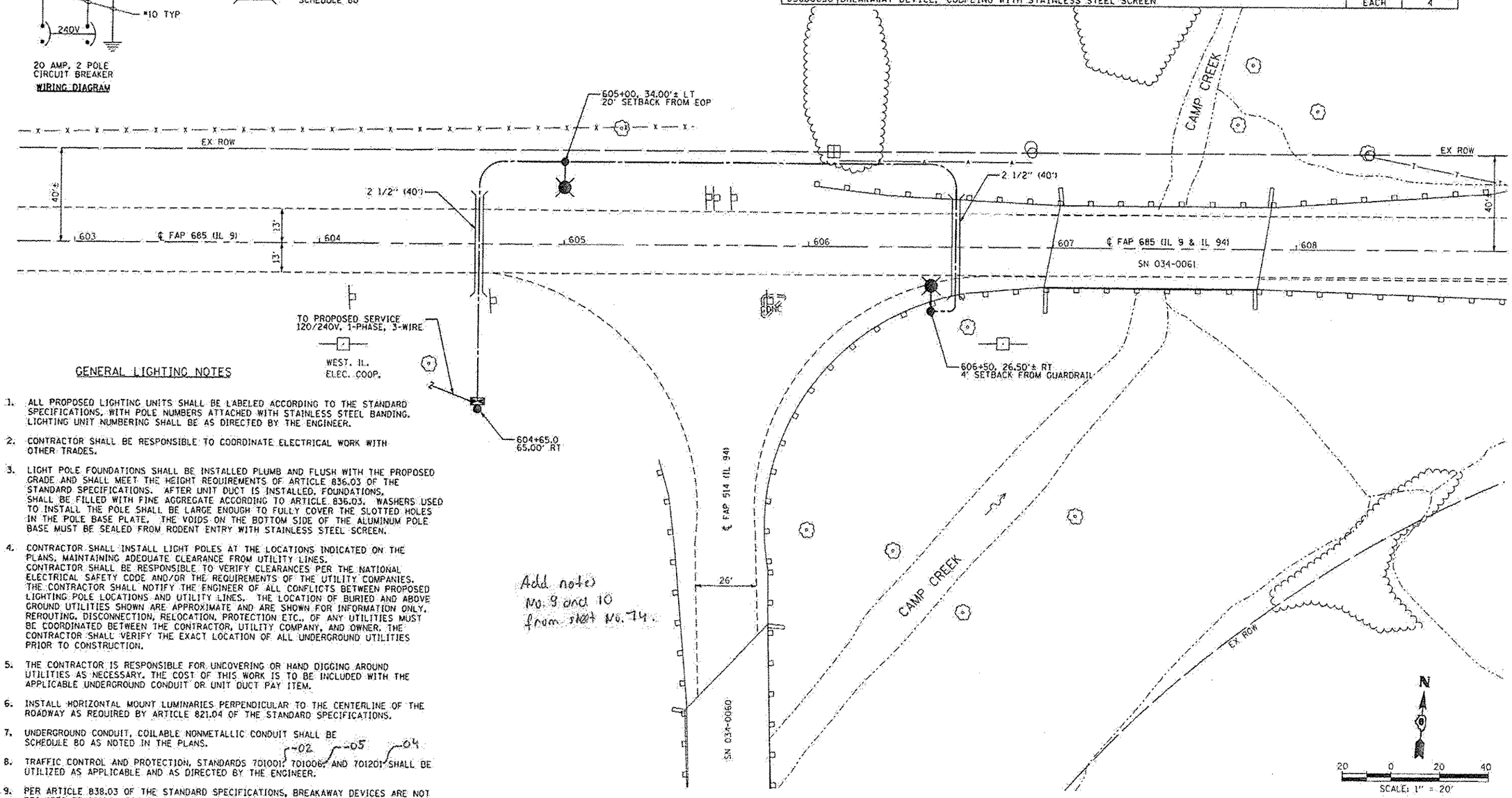

GENERAL LIGHTING NOTES

1. ALL PROPOSED LIGHTING UNITS SHALL BE LABELED ACCORDING TO THE STANDARD SPECIFICATIONS, WITH POLE NUMBERS ATTACHED WITH STAINLESS STEEL BANDING. LIGHTING UNIT NUMBERING SHALL BE AS DIRECTED BY THE ENGINEER.
2. CONTRACTOR SHALL BE RESPONSIBLE TO COORDINATE ELECTRICAL WORK WITH OTHER TRADES.
3. LIGHT POLE FOUNDATIONS SHALL BE INSTALLED PLUMB AND FLUSH WITH THE PROPOSED GRADE AND SHALL MEET THE HEIGHT REQUIREMENTS OF ARTICLE 836.03 OF THE STANDARD SPECIFICATIONS. AFTER UNIT DUCT IS INSTALLED, FOUNDATIONS, SHALL BE FILLED WITH FINE AGGREGATE ACCORDING TO ARTICLE 836.03. WASHERS USED TO INSTALL THE POLE SHALL BE LARGE ENOUGH TO FULLY COVER THE SLOTTED HOLES IN THE POLE BASE PLATE. THE VOIDS ON THE BOTTOM SIDE OF THE ALUMINUM POLE BASE MUST BE SEALED FROM RODENT ENTRY WITH STAINLESS STEEL SCREEN.
4. CONTRACTOR SHALL INSTALL LIGHT POLES AT THE LOCATIONS INDICATED ON THE PLANS, MAINTAINING ADEQUATE CLEARANCE FROM UTILITY LINES. CONTRACTOR SHALL BE RESPONSIBLE TO VERIFY CLEARANCES PER THE NATIONAL ELECTRICAL SAFETY CODE AND/OR THE REQUIREMENTS OF THE UTILITY COMPANIES. THE CONTRACTOR SHALL NOTIFY THE ENGINEER OF ALL CONFLICTS BETWEEN PROPOSED LIGHTING POLE LOCATIONS AND UTILITY LINES. THE LOCATION OF BURIED AND ABOVE GROUND UTILITIES SHOWN ARE APPROXIMATE AND ARE SHOWN FOR INFORMATION ONLY. REROUTING, DISCONNECTION, RELOCATION, PROTECTION ETC., OF ANY UTILITIES MUST BE COORDINATED BETWEEN THE CONTRACTOR, UTILITY COMPANY, AND OWNER. THE CONTRACTOR SHALL VERIFY THE EXACT LOCATION OF ALL UNDERGROUND UTILITIES PRIOR TO CONSTRUCTION.
5. THE CONTRACTOR IS RESPONSIBLE FOR UNCOVERING OR HAND DIGGING AROUND UTILITIES AS NECESSARY. THE COST OF THIS WORK IS TO BE INCLUDED WITH THE APPLICABLE UNDERGROUND CONDUIT OR UNIT DUCT PAY ITEM.
6. INSTALL HORIZONTAL MOUNT LUMINARIES PERPENDICULAR TO THE CENTERLINE OF THE ROADWAY AS REQUIRED BY ARTICLE 821.04 OF THE STANDARD SPECIFICATIONS.
7. UNDERGROUND CONDUIT, COILABLE NONMETALLIC CONDUIT SHALL BE SCHEDULE 80 AS NOTED IN THE PLANS.
8. TRAFFIC CONTROL AND PROTECTION, STANDARDS 701001, 701006, AND 701201 SHALL BE UTILIZED AS APPLICABLE AND AS DIRECTED BY THE ENGINEER. -02 -05 -04
9. PER ARTICLE 838.03 OF THE STANDARD SPECIFICATIONS, BREAKAWAY DEVICES ARE NOT REQUIRED BEHING GUARDRAIL.

Add notes No. 9 and 10 from sheet No. 74.

FILE NAME =	USER NAME = spankop	DESIGNED -	REVISED -
p:\IL684DIDINTEG.illinois.gov\PWIDOT\Documents\IDOT Offices\District 6\Projects\D67C60\DRAWING\Data\ENGINEER\District edits\CADD		DRAWN	REVISED 2C60-ehs-Lighting02.dgn
	PLOT SCALE = 40.0000 ' / in.	CHECKED -	REVISED -
	PLOT DATE = 10/23/2014	DATE -	REVISED -

STATE OF ILLINOIS
DEPARTMENT OF TRANSPORTATION

LIGHTING PLAN
FAP RTE 685 (IL 9) & FAP RTE 538 (IL 94)

SCALE: 1"=20' | SHEET NO. 2 OF 3 SHEETS | STA. TO STA.

F.A.P. RTE.	SECTION	COUNTY	TOTAL SHEETS	SHEET NO.
685/538	(112)RS-3, L, N, I	HANCOCK	156	75

CONTRACT NO. 72C60

FED. ROAD DIST. NO. 6 | ILLINOIS | FED. AID PROJECT

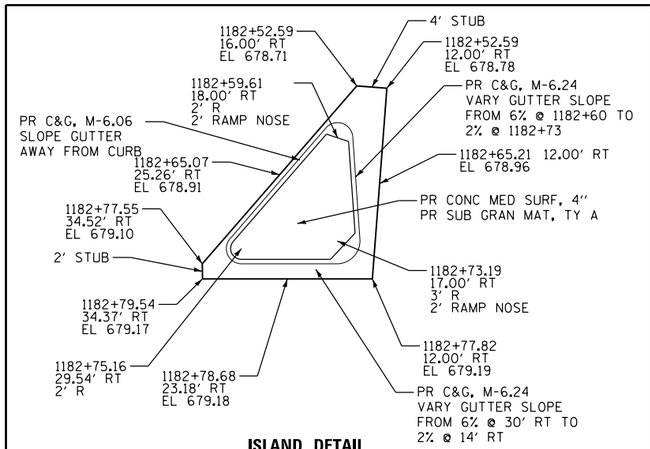

ISLAND DETAIL

FAP 538 (IL 94) ℄ & EOP ELEVATIONS

STATION	OFFSET	ELEVATION	OFFSET	ELEVATION	OFFSET	ELEVATION
1182+03.89	13.00' LT	678.32	℄	678.52	12.00' RT	678.34
1182+25.00	13.00' LT	678.45	℄	678.59	12.00' RT	678.47
1182+50.00	13.00' LT	678.70	℄	678.79	12.00' RT	678.74
1182+75.00	13.00' LT	679.08	℄	679.11	12.00' RT	679.13
1182+78.91	13.00' LT	679.14	℄	679.17	12.00' RT	679.20

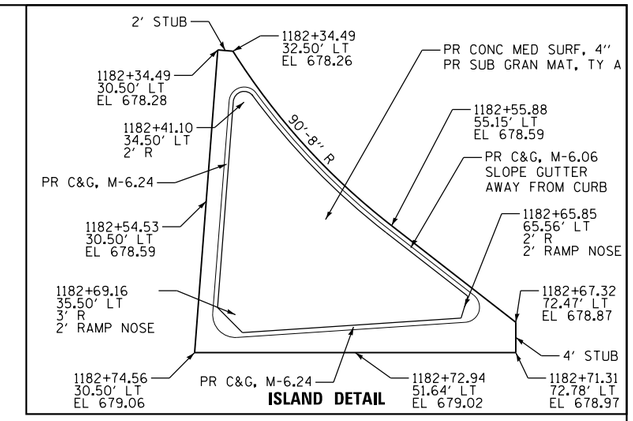

ISLAND DETAIL

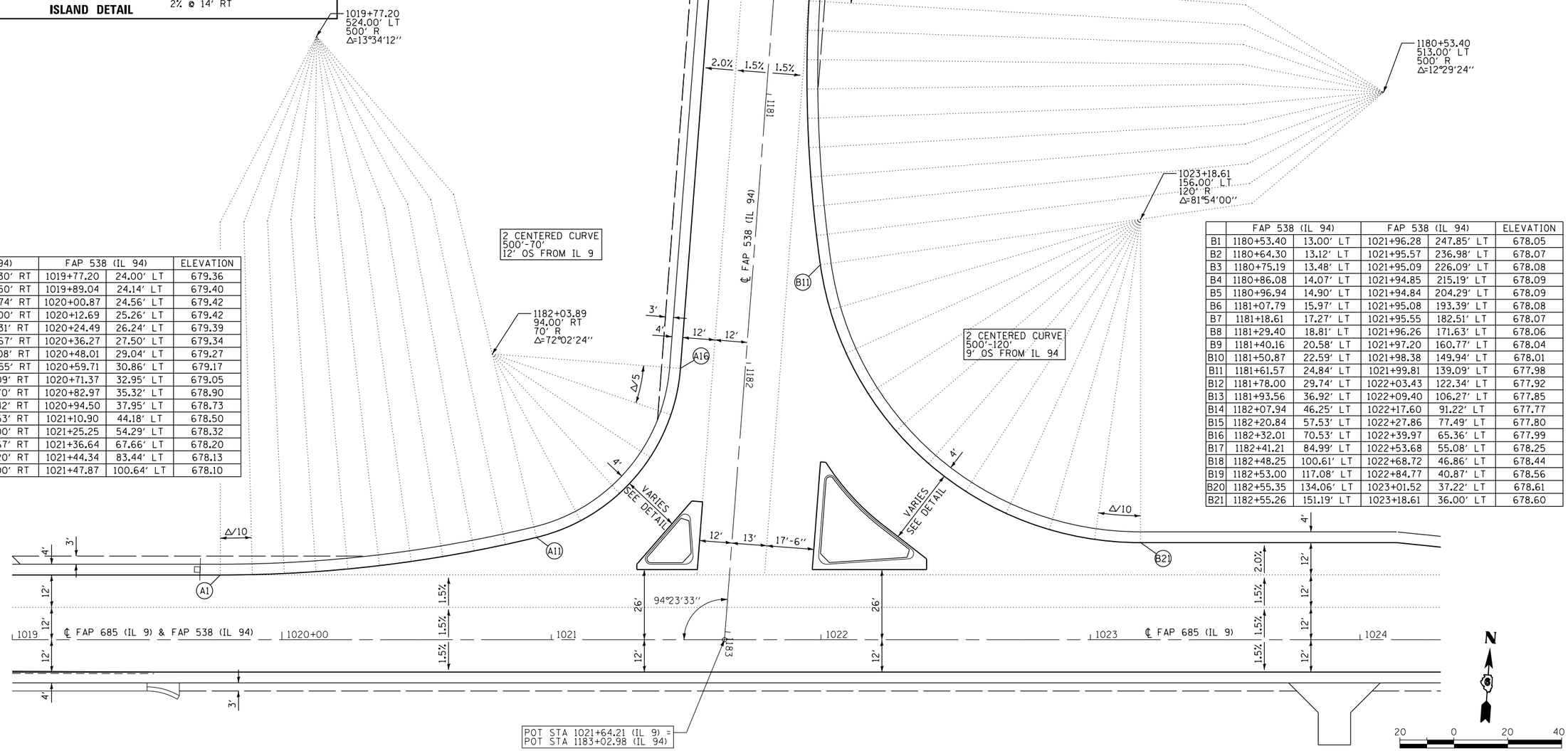

	FAP 538 (IL 94)		FAP 538 (IL 94)		ELEVATION
A1	1182+93.37	188.30' RT	1019+77.20	24.00' LT	679.36
A2	1182+92.33	176.50' RT	1019+89.04	24.14' LT	679.40
A3	1182+91.00	164.74' RT	1020+00.87	24.56' LT	679.42
A4	1182+89.40	153.00' RT	1020+12.69	25.26' LT	679.42
A5	1182+87.52	141.31' RT	1020+24.49	26.24' LT	679.39
A6	1182+85.36	129.67' RT	1020+36.27	27.50' LT	679.34
A7	1182+82.96	118.08' RT	1020+48.01	29.04' LT	679.27
A8	1182+80.22	106.55' RT	1020+59.71	30.86' LT	679.17
A9	1182+77.24	95.09' RT	1020+71.37	32.95' LT	679.05
A10	1182+73.99	83.70' RT	1020+82.97	35.32' LT	678.90
A11	1182+70.48	72.42' RT	1020+94.50	37.95' LT	678.73
A12	1182+63.02	56.53' RT	1021+10.90	44.18' LT	678.50
A13	1182+51.83	43.00' RT	1021+25.25	54.29' LT	678.32
A14	1182+37.63	32.67' RT	1021+36.64	67.66' LT	678.20
A15	1182+21.31	26.20' RT	1021+44.34	83.44' LT	678.13
A16	1182+03.89	24.00' RT	1021+47.87	100.64' LT	678.10

	FAP 538 (IL 94)		FAP 538 (IL 94)		ELEVATION
B1	1180+53.40	13.00' LT	1021+96.28	247.85' LT	678.05
B2	1180+64.30	13.12' LT	1021+95.57	236.98' LT	678.07
B3	1180+75.19	13.48' LT	1021+95.09	226.09' LT	678.08
B4	1180+86.08	14.07' LT	1021+94.85	215.19' LT	678.09
B5	1180+96.94	14.90' LT	1021+94.84	204.29' LT	678.09
B6	1181+07.79	15.97' LT	1021+95.08	193.39' LT	678.08
B7	1181+18.61	17.27' LT	1021+95.55	182.51' LT	678.07
B8	1181+29.40	18.81' LT	1021+96.26	171.63' LT	678.06
B9	1181+40.16	20.58' LT	1021+97.20	160.77' LT	678.04
B10	1181+50.87	22.59' LT	1021+98.38	149.94' LT	678.01
B11	1181+61.57	24.84' LT	1021+99.81	139.09' LT	677.98
B12	1181+78.00	29.74' LT	1022+03.43	122.34' LT	677.92
B13	1181+93.56	36.92' LT	1022+09.40	106.27' LT	677.85
B14	1182+07.94	46.25' LT	1022+17.60	91.22' LT	677.77
B15	1182+20.84	57.53' LT	1022+27.86	77.49' LT	677.80
B16	1182+32.01	70.53' LT	1022+39.97	65.36' LT	677.99
B17	1182+41.21	84.99' LT	1022+53.68	55.08' LT	678.25
B18	1182+48.25	100.61' LT	1022+68.72	46.86' LT	678.44
B19	1182+53.00	117.08' LT	1022+84.77	40.87' LT	678.56
B20	1182+55.35	134.06' LT	1023+01.52	37.22' LT	678.61
B21	1182+55.26	151.19' LT	1023+18.61	36.00' LT	678.60

FILE NAME = pw:\\IL084EBIDINTEG.illinois.gov:PWIDOT\Documents\IDOT Offices\District 6\Projects\D672C60\DRAWINGS\KLINGNER\District edit\CADD Data\KLINGNER\72C60-sht-GeometricDetail.dgn	USER NAME = sparksgw	DESIGNED -	REVISED -
	PLOT SCALE = 40.0000 ' / in.	CHECKED -	REVISED -
	PLOT DATE = 10/23/2014	DATE -	REVISED -

STATE OF ILLINOIS
DEPARTMENT OF TRANSPORTATION

GEOMETRIC DETAIL
FAP RTE 685 (IL 9) & FAP RTE 538 (IL 94)

SCALE: 1"=20' | SHEET NO. 1 OF 1 SHEETS | STA. TO STA.

F.A.P RTE.	SECTION	COUNTY	TOTAL SHEETS	SHEET NO.
685/538	(112)RS-3, L, N, I	HANCOCK	156	77

CONTRACT NO. 72C60

FED. ROAD DIST. NO. 6 | ILLINOIS | FED. AID PROJECT

Illinois Department of Transportation
Division of Highways
IDOT

SOIL BORING LOG

Page 1 of 1

Date 2/6/13

ROUTE IL9/94 DESCRIPTION IL 9/94 near Railroad drainage ditch LOGGED BY M. Tappan

SECTION 112RS-3 LOCATION SE 1/4, SEC. 20, TWP. 7N, RNG. 5W, 4 PM

COUNTY Hancock DRILLING METHOD HSA HAMMER TYPE 140# Auto

STRUCT. NO.
Station

BORING NO. 1
Station 1014+06
Offset 33.0ft LT
Ground Surface Elev. 655.5 ft

Surface Water Elev. 659.0 ft
Stream Bed Elev. 659.0 ft

Groundwater Elev.:
First Encounter 641.0 ft
Upon Completion 633.0 ft
After ____ Hrs. Plugged ft

Description	DEPTH (ft)	BLOWS /6"	UCS Qu (tsf)	MOIST (%)
Lt Brownish Gray Moist SILTY CLAY LOAM		2		
		3 3	1.6 B	20
	652.00			
Gray and Brown Moist SILTY CLAY (Till)		1		
	-5	3 3	1.8 B	24
		1		
Lt Gray and Brown		3 4	1.5 B	24
	647.00			
Lt Gray and Brown Moist CLAY LOAM (Till)		1		
	-10	2 2	0.8 B	18
		1		
Brown		2 3	1.2 B	17
		1		
FREE WATER	-15	3 4	2.6 B	17
		1		
		3 4	1.7 B	16
		1		
Gray	-20	4	1.8	14

Description	DEPTH (ft)	BLOWS /6"	UCS Qu (tsf)	MOIST (%)
Lt Gray and Brown Moist CLAY LOAM (Till) (continued)		5	B	
		1		
		3 7	2.6 B	14
	-25	3 7	2.9 B	14
	630.00			
Boring Complete				
	-30			
	-35			
	-40			

The Unconfined Compressive Strength (UCS) Failure Mode is indicated by (B-Bulge, S-Shear, P-Penetrometer, E-Estimated)
Abbreviations W.O.H - Sampler Advanced By Weight of Hammer, W.O.P - Advanced by Weight of Pipe, B.S. - Before Seating
The SPT (N value) is the sum of the last two blow values in each sampling zone (AASHTO T206) BBS, from 137 (Rev. 8-99)

File Name S:\SOILS\GINT FILES\034 HANCOCK\IL9-94 OVER UNNAMED DRAINAGE DITCH.GPJ Data Template D6TEMPLT.GDT Date Printed 9/10/14
Latitude 40D 34.968N Longitude 90D 59.120W Datum NAD83 Job Number C96-039-09

Illinois Department of Transportation
Division of Highways
IDOT

SOIL BORING LOG

Page 1 of 1

Date 10/15/14

ROUTE 94 DESCRIPTION 48" Pipe Culvert 1.2 Miles North of Y Intersection of RT 9/94 LOGGED BY M. Tappan

SECTION 112 RS-3 LOCATION SW 1/4, SEC. 16, TWP. 7N, RNG. 5W, 4 PM

COUNTY Hancock DRILLING METHOD HSA HAMMER TYPE 140# Auto

STRUCT. NO. N/A
Station +/- 1120+15

BORING NO. 1 East Shoulder
Station 1120+16
Offset 21.5ft LT
Ground Surface Elev. 661.7 ft

Surface Water Elev. N/A ft
Stream Bed Elev. N/A ft

Groundwater Elev.:
First Encounter ____ ft
Upon Completion Dry ft
After 24 Hrs. 646.7 ft

Description	DEPTH (ft)	BLOWS /6"	UCS Qu (tsf)	MOIST (%)
Gray and Brown Moist CLAY (Till)		0		
		2 3	1.8 B	22
	-5	0		
		3 5	1.6 B	16
	654.70			
Gray and Brown Moist CLAY LOAM (Till)		1		
		2 3	.60 B	18
	-10	1		
		3 4	1.2 B	15
Light Brownish Gray Moist CLAY LOAM (Till)		3		
		8 9	2.6 B	13
Light Brown and Gray	-15	1		
		5 8	3.1 B	13
		3		
		5 6	2.6 B	13
	-20			

Description	DEPTH (ft)	BLOWS /6"	UCS Qu (tsf)	MOIST (%)
Gray and Brown Moist CLAY LOAM (Till) *(continued)* Gray Moist CLAY LOAM (Till)		1		
		3 6	2.5 B	13
	637.70	1		
Boring Completed		3 7	2.9 B	13
	-25			
	-30			
	-35			
	-40			

The Unconfined Compressive Strength (UCS) Failure Mode is indicated by (B-Bulge, S-Shear, P-Penetrometer, E-Estimated)
Abbreviations W.O.H - Sampler Advanced By Weight of Hammer, W.O.P - Advanced by Weight of Pipe, B.S. - Before Seating
The SPT (N value) is the sum of the last two blow values in each sampling zone (AASHTO T206) BBS, from 137 (Rev. 8-99)

File Name S:\SOILS\GINT FILES\034 HANCOCK\RT 94 PIPE CULVERT 1.2 MILES N OF Y INTERSECTION OF RT 9-94.GPJ Data Template D6TEMPLT.GDT Date Printed 10/21/14
Latitude 40.36.009N Longitude 90.58.947W Datum NAD83 Job Number D-96-039-09

FILE NAME = pw:\\IL084EBIDINTEG.illinois.gov:PWIDOT\Documents\IDOT Offices\District 6\Projects\D672C60\DRAWING\Boring-Logs.dgn	USER NAME = sparksgw	DESIGNED -	REVISED -	STATE OF ILLINOIS DEPARTMENT OF TRANSPORTATION	SOIL BORING LOG	F.A.P. RTE.	SECTION	COUNTY	TOTAL SHEETS	SHEET NO.
	PLOT SCALE = 40.0000 ' / in.	CHECKED -	REVISED -			685/538	(112)RS-3,L,N,I	HANCOCK	156	78
Default	PLOT DATE = 10/23/2014	DATE -	REVISED -		SCALE: SHEET OF SHEETS STA. TO STA.			CONTRACT NO. 72C60		
								ILLINOIS FED. AID PROJECT		

Illinois Department of Transportation
Division of Highways
IDOT

SOIL BORING LOG

Date 10/16/14

ROUTE IL 94 DESCRIPTION Box Culvert over unnamed ditch LOGGED BY M. Tappan

SECTION 112-RS-3 LOCATION SW 1/4, SEC. 16, TWP. 7N, RNG. 5W, 4 PM

COUNTY Hancock DRILLING METHOD HSA HAMMER TYPE 140# Auto

STRUCT. NO. 100' N 9/94 intersection
Station

BORING NO. 1 NW WW
Station 1177+67
Offset 16.0ft RT
Ground Surface Elev. 676.3 ft

Surface Water Elev. 654.3 ft
Stream Bed Elev. 654.3 ft

Groundwater Elev.:
First Encounter 647.3 ft
Upon Completion Plugged ft
After ____ Hrs. Plugged ft

Description	DEPTH (ft)	BLOWS /6"	UCS Qu (tsf)	MOIST (%)
Gray and Brown Moist SILTY CLAY (Fill)				
		0		
		2 3	1.2 B	23
		0		
		2 3	1.3 B	26
	-5			
		1		
		2 3	1.0 B	28
		1		
		2 3	1.0 B	30
	-10			
		1		
Lt Bluish Gray		2 3	1.0 B	29
		1		
Dk Gray		3 3	1.1 B	24
	-15			
		0		
		2 4	1.3 B	28
	657.30	1		
Black Moist SILTY CLAY		2 4	1.2 S-12	28
	-20			
Black Moist SILTY CLAY *(continued)*		1		
Lt Olive Brown and Lt Bluish Gray Moist SILTY CLAY		3 3	1.6 B	25
		1		
V. Moist		2 2	0.5 B	25
	-25			
	648.80			
Brown and Gray Moist CLAY LOAM (Till) FREE WATER		0		
		4 6	2.2 B	14
	-30			
		1		
Gray		5 8	2.1 B	15
	-35			
		1		
		4 7	2.1 B	14
	-40			

The Unconfined Compressive Strength (UCS) Failure Mode is indicated by (B-Bulge, S-Shear, P-Penetrometer, E-Estimated)
Abbreviations W.O.H - Sampler Advanced By Weight of Hammer, W.O.P - Advanced by Weight of Pipe, B.S. - Before Seating
The SPT (N value) is the sum of the last two blow values in each sampling zone (AASHTO T206) BBS, from 137 (Rev. 8-99)

File Name S:\SOILS\GINT FILES\034 HANCOCK\IL 94 100FT N OF 9-94 INTERSECTION.GPJ Data Template D6TEMPLT.GDT Date Printed 10/21/14
Latitude 40D 35.065N Longitude 90D 58.961W Datum NAD83 Job Number D66-039-09

Illinois Department of Transportation
Division of Highways
IDOT

SOIL BORING LOG

Date 10/16/14

ROUTE IL 94 DESCRIPTION Box Culvert over unnamed ditch LOGGED BY M. Tappan

SECTION 112-RS-3 LOCATION SW 1/4, SEC. 16, TWP. 7N, RNG. 5W, 4 PM

COUNTY Hancock DRILLING METHOD HSA HAMMER TYPE 140# Auto

STRUCT. NO. 100' N 9/94 intersection
Station

BORING NO. 1 NW WW
Station 1177+67
Offset 16.0ft RT
Ground Surface Elev. 676.3 ft

Surface Water Elev. 654.3 ft
Stream Bed Elev. 654.3 ft

Groundwater Elev.:
First Encounter 647.3 ft
Upon Completion Plugged ft
After ____ Hrs. Plugged ft

Description	DEPTH (ft)	BLOWS /6"	UCS Qu (tsf)	MOIST (%)
Brown and Gray Moist CLAY LOAM (Till) FREE WATER *(continued)*		2		
		5 8	3.3 B	15
	-45			
		1		
		6 9	3.5 B	14
	-50			
		1		
Gray Moist CLAY LOAM (Till)		5 7	2.6 B	13
	-55			
		2		
		5 8	2.7 B	13
	-60			
Brown and Gray Moist CLAY LOAM (Till) FREE WATER *(continued)*		2		
		5 7	1.5 B	15
	611.30 -65			
Boring Complete				
	-70			
	-75			
	-80			

The Unconfined Compressive Strength (UCS) Failure Mode is indicated by (B-Bulge, S-Shear, P-Penetrometer, E-Estimated)
Abbreviations W.O.H - Sampler Advanced By Weight of Hammer, W.O.P - Advanced by Weight of Pipe, B.S. - Before Seating
The SPT (N value) is the sum of the last two blow values in each sampling zone (AASHTO T206) BBS, from 137 (Rev. 8-99)

File Name S:\SOILS\GINT FILES\034 HANCOCK\IL 94 100FT N OF 9-94 INTERSECTION.GPJ Data Template D6TEMPLT.GDT Date Printed 10/21/14
Latitude 40D 35.065N Longitude 90D 58.961W Datum NAD83 Job Number D66-039-09

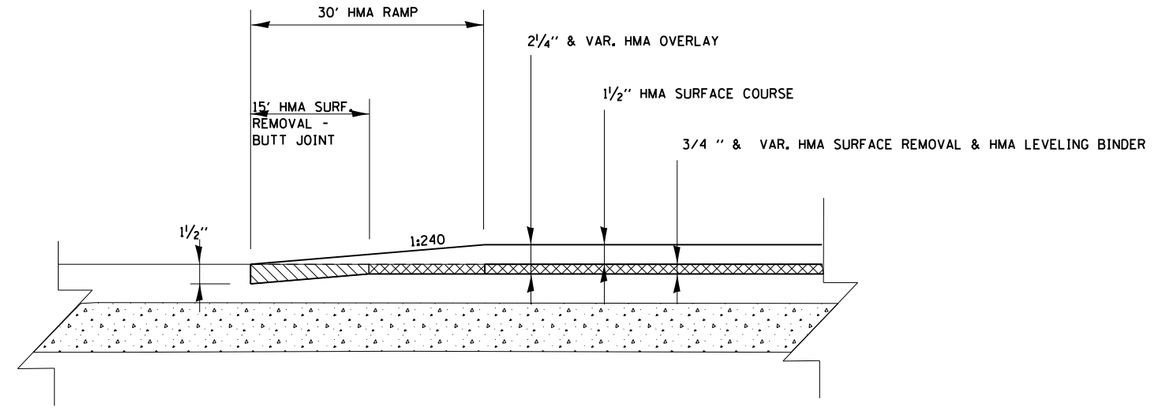

BUTT JOINT DETAIL

STA. 987+20.00 TO STA. 987+50.00 (IL 94)
STA. 1102+75.47 TO STA. 1103+05.47 (IL 94)
STA. 1104+08.20 TO STA. 1104+38.20 (IL 94)
STA. 1147+79.26 TO STA. 1148+09.26 (IL 94)
STA. 1148+99.21 TO STA. 1149+29.21 (IL 94)

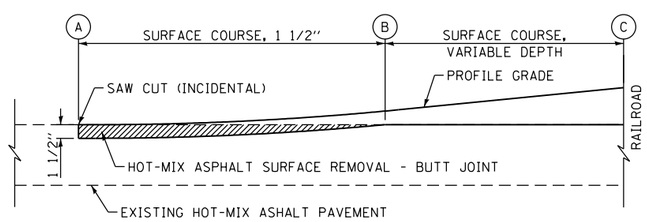

LOCATION	A	B	C
FAP 685 (IL 9)	1012+27.31	1012+47.31	1013+14

BUTT JOINT DETAIL

NOT TO SCALE

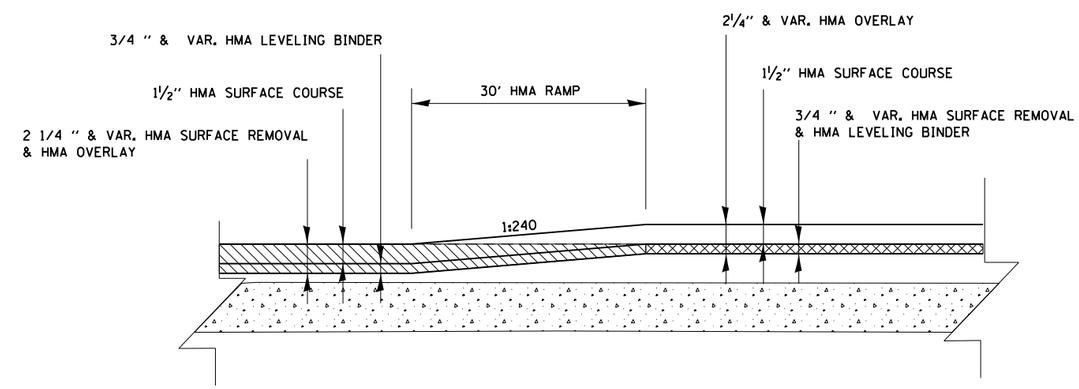

HMA RAMP LOCATIONS

STA. 1014+70.00 TO STA. 1015+00.00 (IL 94)
STA. 1019+56.00 TO STA. 1019+86.00 (IL 94)
STA. 1023+20.00 TO STA. 1023+50.00 (IL 94)
STA. 1030+00.00 TO STA. 1030+30.00 (IL 94)
STA. 1081+20.00 TO STA. 1081+50.00 (IL 94)
STA. 1087+75.00 TO STA. 1088+05.00 (IL 94)
STA. 1110+95.00 TO STA. 1111+25.00 (IL 94)
STA. 1114+50.00 TO STA. 1114+80.00 (IL 94)
STA. 1135+20.00 TO STA. 1135+50.00 (IL 94)
STA. 1142+00.00 TO STA. 1142+30.00 (IL 94)
STA. 1152+10.00 TO STA. 1152+40.00 (IL 94)
STA. 1158+00.00 TO STA. 1158+30.00 (IL 94)

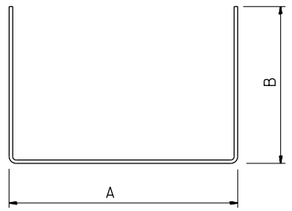

#5 U - bar

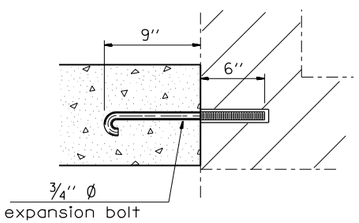

Expansion Bolt Detail

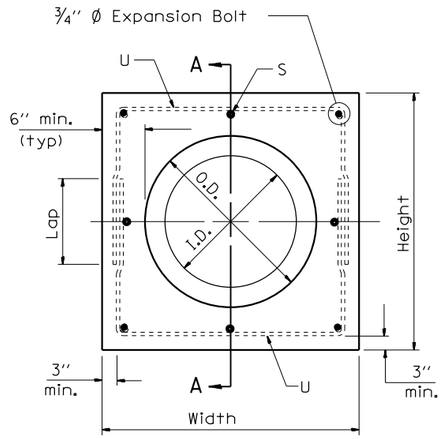

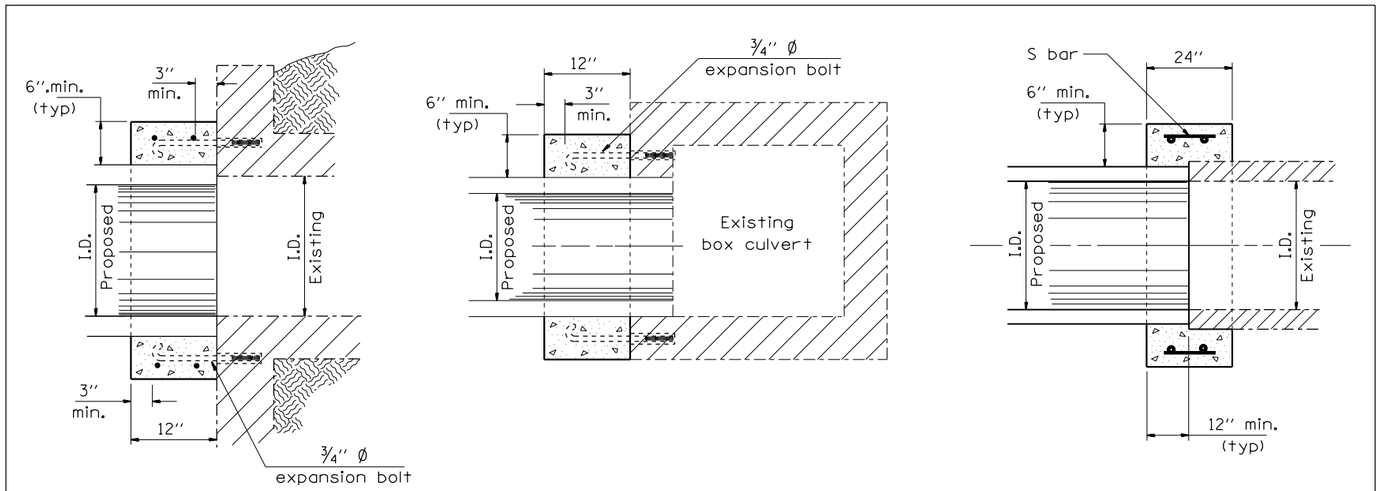

Section Type A
(Box end extension)

Section Type B
(Pipe in side extension)

Section Type C
(Pipe end to pipe end extension
No expansion bolts required)

Section A - A

54002020 50800105 54248510

STR NO.	Station	Type	Skew	Existing Culvert Size	Proposed Culvert I.D. (in)	Proposed Culvert O.D. (in)	Collar Height (in)	Collar Width (in)	Reinforcement Bars S Bar No.	S Bar Size	S Bar Length	U Bar No.	U Bar Size	U Bar A (in)	U Bar B (in)	U Bar Lap (in)	U Bar Length (in)	U Bar (lb)	Expansion Bolts, 3/4'' Each	Concrete Collar cu yd
FAP 685 (IL 9)																				
1	1013+49.5 (LT)	A	26.5	2' X2'	24	30	42	42	-	-	-	4	#5	36	27	18	90	31.3	4	0.27
2	1013+49.5 (RT)	A	26.5	2' X2'	24	30	42	42	-	-	-	4	#5	36	27	18	90	31.3	4	0.27
4	1013+76.0 (LT)	A	26.5	3' X3'	36	44	56	56	-	-	-	4	#5	50	34	18	118	41.1	4	0.42
5	1013+76.0 (RT)	A	26.5	3' X3'	36	44	56	56	-	-	-	4	#5	50	34	18	118	41.1	4	0.42
FAP 538 (IL 94)																				
41	1177+71.5 (RT)	A	25.5	4' X4'	48	60	72	72	8	#5	20	4	#5	66	42	18	150	66.2	-	0.81
42	1178+13.6 (LT)	A	25.5	4' X4'	48	60	72	72	8	#5	20	4	#5	66	42	18	150	66.2	-	0.81
																	SUBTOTAL (WYE) =	277.2	16	3.01
																	USE	280	16	3.1
FAP 685 (IL 9)																				
43	1119+86.0 (LT)	A	NA	2' X1.5'	24	30	42	42	-	-	-	4	#5	36	27	18	90	31.3	4	0.27
44	1119+86.0 (RT)	A	NA	2' X1.5'	24	30	42	42	-	-	-	4	#5	36	27	18	90	31.3	4	0.27
45	1138+64.0 (LT)	A	NA	2' X2'	30	37	49	49	-	-	-	4	#5	43	31	18	105	36.6	4	0.34
46	1138+64.0 (RT)	A	NA	2' X2'	30	37	49	49	-	-	-	4	#5	43	31	18	105	36.6	4	0.34
47	1172+34.0 (RT)	A	NA	2' X2'	30	37	49	49	-	-	-	4	#5	43	31	18	105	36.6	4	0.34
48	1189+54.0 (LT)	A	NA	3' X2'	36	44	56	56	-	-	-	4	#5	50	34	18	118	41.1	4	0.42
49	1189+54.0 (RT)	A	NA	3' X2'	36	44	56	56	-	-	-	4	#5	50	34	18	118	41.1	4	0.42
																	SUBTOTAL (SAFETY) =	254.6	28	2.4
																	USE	260	28	2.4
FAP 538 (IL 94)																				
34	1174+52.5 (LT)	A	NA	2' X2'	30	37	49	49	-	-	-	4	#5	43	31	18	105	36.6	4	0.34
39	1174+52.5 (RT)	A	NA	2' X2'	30	37	49	49	-	-	-	4	#5	43	31	18	105	36.6	4	0.34
																	SUBTOTAL (PPP) =	73.2	8	0.68
																	USE	80	8	0.7
																	Totals	620.0	52.0	6.2
																		(lb)	Each	cu yd

Notes:

1. Expansion bolts shall consist of self drilling expansion shields and 3/4'' Ø hooked bolts. Hooked bolts shall extend a minimum of 9'' into new concrete. Minimum Certified Proof Load - 2 ton

2. Use minimum of 1 (one) expansion bolt at each corner.

FILE NAME = c:\pw_work\pwidot\edwardsjd\d0388419\D672C60-sht-Details.dgn	USER NAME = edwardsjd	DESIGNED -	REVISED -
		DRAWN -	REVISED -
	PLOT SCALE = 100.0000 ' / in.	CHECKED -	REVISED -
	PLOT DATE = Mar-10-2015 02:58:36PM	DATE -	REVISED -

STATE OF ILLINOIS
DEPARTMENT OF TRANSPORTATION

CONCRETE COLLAR DETAILS

SCALE: none | SHEET NO. 2 OF 6 SHEETS | STA. | TO STA.

F.A.P RTE.	SECTION	COUNTY	TOTAL SHEETS	SHEET NO.
685/538	(112)RS-3, L, N, I	HANCOCK	156	81

CONTRACT NO. 72C60

FED. ROAD DIST. NO. 6 | ILLINOIS | FED. AID PROJECT

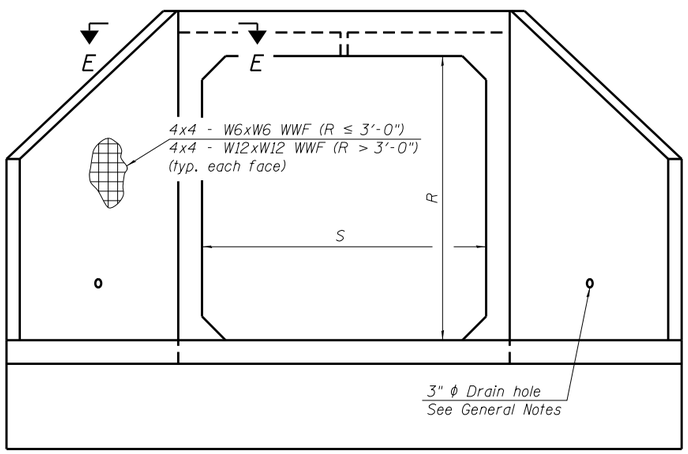

END VIEW

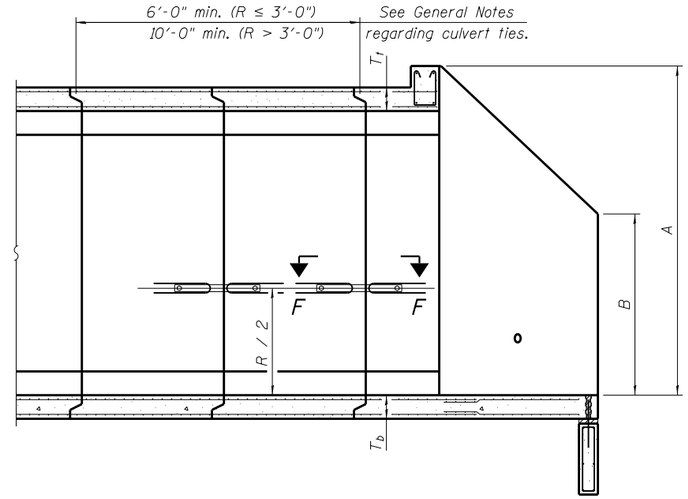

SECTION A-A

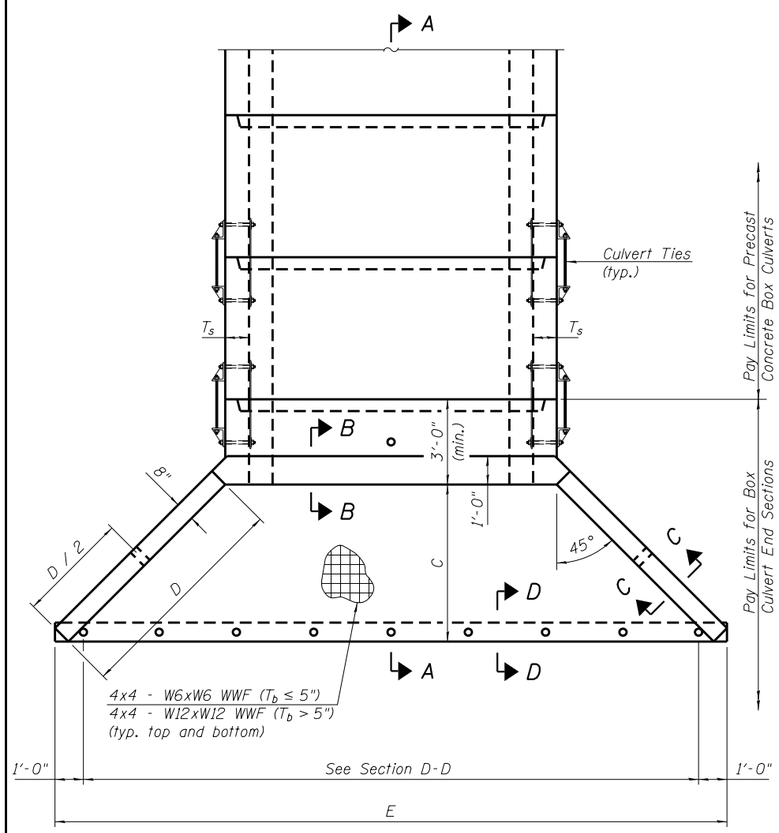

PLAN

GENERAL NOTES

Box Culvert End Sections shall be constructed according to the requirements of Section 540 of the Standard Specifications except as modified herein. End sections will be paid for at the contract unit price per each for Box Culvert End Sections.

The Contractor may furnish the end section as a single precast concrete piece or construct the end section in the field using cast-in-place (CIP) construction. For CIP construction, the bottom slab thickness shall be increased by 2" and the clear cover to the bottom mat of reinforcement shall be increased to 3".

Box section dimensions, materials, and reinforcement details for Box Culvert End Sections shall be according to the requirements for ASTM C 1577 as required for the design of the portion of the culvert within the limits of Precast Concrete Box Culverts except as modified herein.

The number of culvert ties shall be sufficient to engage the minimum length of culvert barrel shown within the pay limits for Precast Concrete Box Culverts and will be dependent upon the length of box culvert segments furnished by the Contractor. Culvert ties are not required for box culverts having a rise (R) less than or equal to 3 ft and a span (S) greater than or equal to 10 ft.

All costs associated with furnishing and installing or constructing the toewall and culvert ties will not be measured for payment but shall be included in the unit price for Box Culvert End Sections of the culvert number specified.

Shop drawings that detail slab thickness and reinforcement layout for the Box Culvert End Sections shall be provided to the Engineer for review and approval. Reinforcement bars not detailed herein shall be detailed with a clear distance at the end of the reinforcement not less than $\frac{1}{2}$" nor more than 2". For the precast option, it shall be the Contractor's responsibility for determining a method of handling and a construction procedure shall be included on the shop drawings. The Contractor shall determine and detail in the shop drawings any necessary strengthening or stiffening provisions necessary to handle the precast segment. Any required modifications shall be at no extra charge.

All exposed concrete edges shall be chamfered $\frac{3}{4}$" unless noted otherwise.

The Contractor may use reinforcement bars in lieu of welded wire fabric (WWF). Reinforcement bars shall be limited to the sizes of #3 through #5 bars, a maximum spacing of the lesser of 8" or the member thickness, and shall result in an area of reinforcement equal to or greater than that provided by the WWF. Minimum lap lengths detailed herein are applicable to WWF and reinforcement bars.

Reinforcement (circumferential and longitudinal) in the culvert barrel portion of the end section being lapped with reinforcement from the wingwalls or bottom slab of the end section shall not be less than that required by ASTM C 1577 for the design fill height or the reinforcement detailed for the end section, whichever is greater.

Reinforcement bars shall conform to the requirements of ASTM A 706 Gr 60.

Reinforcement bars designated (E) shall be epoxy coated.

Bonded construction joints shall be prepared according to Article 503.09 of the Standard Specifications.

One drain hole shall be provided in each wingwall for end sections of box culverts having an opening with a clear rise greater than 3 ft. The drain hole shall be located within the lower 1/3 of the clear rise of the box culvert and shall conform to the requirements of Article 503.11 of the Standard Specifications.

APRON END SECTION DIMENSIONS

Span (S)	Rise (R)	T_t	T_b	T_s	A	B	C	D	E	Concrete Cu. Yd.	Culvert Ties Required
3'-0"	2'-0"	7"	6"	4"	3'-4"	2'-2"	2'-10 5/8"	4'-1"	10'-4 5/8"	2.8	Yes
3'-0"	2'-0"	4"	4"	4"	3'-1"	2'-1"	2'-7 7/8"	3'-9"	9'-11"	2.3	Yes
3'-0"	3'-0"	7"	6"	4"	4'-4"	2'-8"	3'-10 5/8"	5'-6"	12-4 5/8"	3.7	Yes
3'-0"	3'-0"	4"	4"	4"	4'-1"	2'-7"	3'-7 7/8"	5'-2"	11'-11"	3.1	Yes
4'-0"	2'-0"	7.5"	6"	5"	3'-4 1/2"	2'-2 1/2"	2'-11 3/8"	4'-2"	11'-8"	3.3	Yes
4'-0"	2'-0"	5"	5"	5"	3'-2"	2'-1"	2'-8 1/2"	3'-10"	11'-2 3/8"	2.8	Yes
4'-0"	3'-0"	7.5"	6"	5"	4'-4 1/2"	2'-8 1/2"	3'-11 3/8"	5'-7"	13'-8 1/8"	4.2	Yes
4'-0"	3'-0"	5"	5"	5"	4'-2"	2'-7"	3'-8 1/2"	5'-3"	13'-2 3/8"	3.7	Yes
4'-0"	4'-0"	7.5"	6"	5"	5'-4 1/2"	3'-2 1/2"	4'-11 3/8"	7'-0"	15'-8 1/8"	5.3	Yes
4'-0"	4'-0"	5"	5"	5"	5'-2"	3'-1"	4'-8 5/8"	6'-8"	15'-2 1/2"	4.7	Yes
5'-0"	2'-0"	8"	7"	6"	3'-5"	2'-3"	2'-11 3/8"	4'-2"	12'-10"	3.9	Yes
5'-0"	2'-0"	6"	6"	6"	3'-3"	2'-2"	2'-10"	4'-0"	12'-7 1/4"	3.5	Yes
5'-0"	3'-0"	8"	7"	6"	4'-5"	2'-9"	3'-11 3/8	5'-7"	14'-10 1/8"	4.9	Yes
5'-0"	3'-0"	6"	6"	6"	4'-3"	2'-8"	3'-10"	5'-5"	14'-7 1/4"	4.5	Yes
5'-0"	4'-0"	8"	7"	6"	5'-5"	3'-3"	4'-11 3/8"	7'-0"	16'-10 1/8"	6.1	Yes
5'-0"	4'-0"	6"	6"	6"	5'-3"	3'-2"	4'-9 1/4"	6'-9"	16'-5 7/8"	5.5	Yes
5'-0"	5'-0"	8"	7"	6"	6'-5"	3'-9"	5'-11 3/8"	8'-5"	18'-10 1/8"	7.4	Yes
5'-0"	5'-0"	6"	6"	6"	6'-3"	3'-8"	5'-9 1/4"	8'-2"	18'-5 7/8"	6.8	Yes
6'-0"	2'-0"	8"	7"	7"	3'-5"	2'-3"	2'-11 3/8"	4'-2"	14'-0"	4.3	Yes
6'-0"	2'-0"	7"	7"	7"	3'-4"	2'-2"	2'-10 5/8"	4'-1"	13'-10 5/8"	4.2	Yes
6'-0"	3'-0"	8"	7"	7"	4'-5"	2'-9"	3'-11 3/8"	5'-7"	16'-0 1/8"	5.4	Yes
6'-0"	3'-0"	7"	7"	7"	4'-4"	2'-8"	3'-10 5/8"	5'-6"	15'-10 5/8"	5.2	Yes
6'-0"	4'-0"	8"	7"	7"	5'-5"	3'-3"	4'-11 3/8"	7'-0"	18'-0 1/8"	6.5	Yes
6'-0"	4'-0"	7"	7"	7"	5'-4"	3'-2"	4'-10 3/4"	6'-11"	17'-10 3/4"	6.5	Yes
6'-0"	5'-0"	8"	7"	7"	6'-5"	3'-9"	5'-11 3/8"	8'-5"	20'-0 1/8"	8.0	Yes
6'-0"	5'-0"	7"	7"	7"	6'-4"	3'-8"	5'-10 3/4"	8'-4"	19'-10 3/4"	7.8	Yes
6'-0"	6'-0"	8"	7"	7"	7'-5"	4'-3"	6'-11 1/2"	9'-10"	22'-0 1/4"	9.5	Yes
6'-0"	6'-0"	7"	7"	7"	7'-4"	4'-2"	6'-10 3/4"	9'-9"	21'-10 3/4"	9.3	Yes
7'-0"	2'-0"	8"	8"	8"	3'-5"	2'-3"	2'-11 3/8"	4'-2"	15'-2"	4.9	Yes
7'-0"	3'-0"	8"	8"	8"	4'-5"	2'-9"	3'-11 3/8"	5'-7"	17'-2 1/8"	6.1	Yes
7'-0"	4'-0"	8"	8"	8"	5'-5"	3'-3"	4'-11 3/8"	7'-0"	19'-2 1/8"	7.4	Yes
7'-0"	5'-0"	8"	8"	8"	6'-5"	3'-9"	5'-11 3/8"	8'-5"	21'-2 1/8"	8.9	Yes
7'-0"	6'-0"	8"	8"	8"	7'-5"	4'-3"	6'-11 1/2"	9'-10"	23'-2 1/4"	10.6	Yes
8'-0"	2'-0"	8"	8"	8"	3'-5"	2'-3"	2'-11 3/8"	4'-2"	16'-2"	5.3	Yes
8'-0"	3'-0"	8"	8"	8"	4'-5"	2'-9"	3'-11 3/8"	5'-7"	18'-2 1/8"	6.5	Yes
8'-0"	4'-0"	8"	8"	8"	5'-5"	3'-3"	4'-11 3/8"	7'-0"	20'-2 1/8"	7.8	Yes
8'-0"	5'-0"	8"	8"	8"	6'-5"	3'-9"	5'-11 3/8"	8'-5"	22'-2 1/8"	9.3	Yes
8'-0"	6'-0"	8"	8"	8"	7'-5"	4'-3"	6'-11 1/2"	9'-10"	24'-2 1/4"	11.0	Yes
9'-0"	2'-0"	9"	9"	9"	3'-6"	2'-3"	3'-0 3/4"	4'-4"	17'-6 7/8"	6.2	Yes
9'-0"	3'-0"	9"	9"	9"	4'-6"	2'-9"	4'-0 3/4"	5'-9"	19'-6 7/8"	7.5	Yes
9'-0"	4'-0"	9'	9"	9"	5'-6"	3'-3"	5'-0 3/4"	7'-2"	21'-6 7/8"	9.0	Yes
9'-0"	5'-0"	9"	9"	9"	6'-6"	3'-9"	6'-0 7/8"	8'-7"	23'-7"	10.6	Yes
9'-0"	6'-0"	9"	9"	9"	7'-6"	4'-3"	7'-0 1/8"	9'-11"	25'-5 5/8"	12.4	Yes
10'-0"	2'-0"	10"	10"	10"	3'-7"	2'-4"	3'-1 1/2"	4'-5"	18'-10 1/4"	7.1	No
10'-0"	3'-0"	10"	10"	10"	4'-7"	2'-10"	4'-1 1/2"	5'-10"	20'-10 1/4"	8.6	No
10'-0"	4'-0"	10"	10"	10"	5'-7"	3'-4"	5'-1 1/2"	7'-3"	22'-10 3/8"	10.2	Yes
10'-0"	5'-0"	10"	10"	10"	6'-7"	3'-10"	6'-1 1/2"	8'-8"	24'-10 3/8"	12.0	Yes
10'-0"	6'-0"	10"	10"	10"	7'-7"	4'-4"	7'-1 1/2"	10'-1"	26'-10 3/8"	13.9	Yes
11'-0"	2'-0"	11"	11"	11"	3'-8"	2'-4"	3'-2 7/8"	4'-7"	20'-3 1/8"	8.2	No
11'-0"	3'-0"	11"	11"	11"	4'-8"	2'-10"	4'-2 7/8"	6'-0"	22'-3 1/8"	9.8	No
11'-0"	4'-0"	11"	11"	11"	5'-8"	3'-4"	5'-2 1/4"	7'-4"	24'-1 3/4"	11.5	Yes
11'-0"	6'-0"	11"	11"	11"	7'-8"	4'-4"	7'-2 1/4"	10'-2"	28'-1 7/8"	15.5	Yes
12'-0"	2'-0"	12"	12"	12"	3'-9"	2'-5"	3'-3 5/8"	4'-8"	21'-6 1/2"	9.3	No
12'-0"	3'-0"	12"	12"	12"	4'-9"	2'-11"	4'-3 5/8"	6'-1"	23'-6 1/2"	11.1	No
12'-0"	4'-0"	12"	12"	12"	5'-9"	3'-5"	5'-3 5/8"	7'-6"	25'-6 5/8"	13.0	Yes
12'-0"	6'-0"	12"	12"	12"	7'-9"	4'-5"	7'-3 5/8"	10'-4"	29'-6 5/8"	17.4	Yes

Note:
Two sets of apron end section dimensions are shown above for some box culvert sizes due to the top and bottom slabs having different thicknesses per ASTM C 1577 for design fill heights less than 2 ft.

SCB-AES-1

11-5-13

(Sheet 1 of 2)

FILE NAME =	USER NAME =	DESIGNED -	REVISED
		CHECKED -	REVISED
	PLOT SCALE =	DRAWN -	REVISED
	PLOT DATE =	CHECKED -	REVISED

STATE OF ILLINOIS
DEPARTMENT OF TRANSPORTATION

PRECAST CONCRETE BOX CULVERT
APRON END SECTION DETAILS

SHEET NO. OF SHEETS

F.A.P RTE.	SECTION	COUNTY	TOTAL SHEETS	SHEET NO.
685/538	(112)RS-3,L,N,I	HANCOCK	156	81A
		CONTRACT NO. 72C60		
		ILLINOIS FED. AID PROJECT		

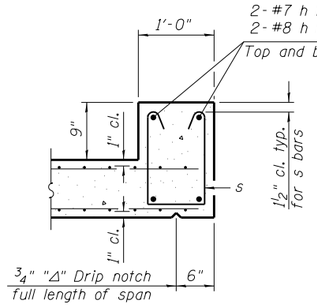

SECTION B-B
(Top slab at downstream end)

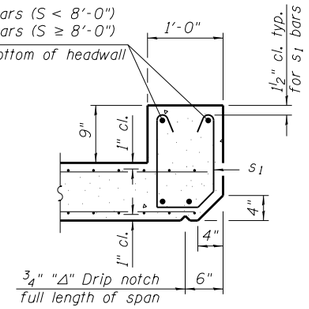

SECTION B-B
(Top slab at upstream end)

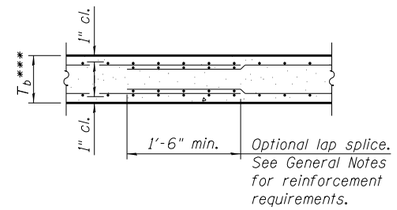

SECTION B-B
(Bottom Slab)

*** This dimension shall be increased by 2" for CIP construction.

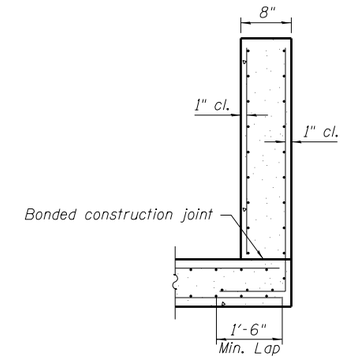

SECTION C-C

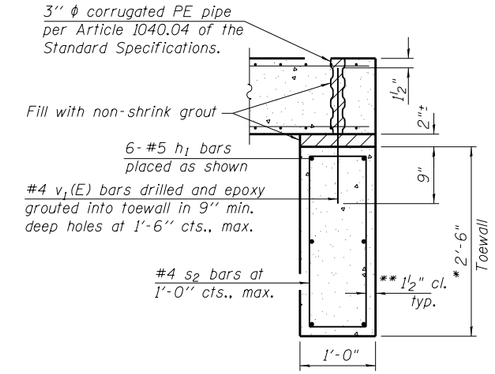

SECTION D-D

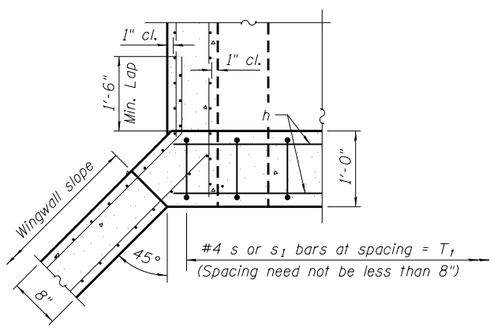

SECTION E-E

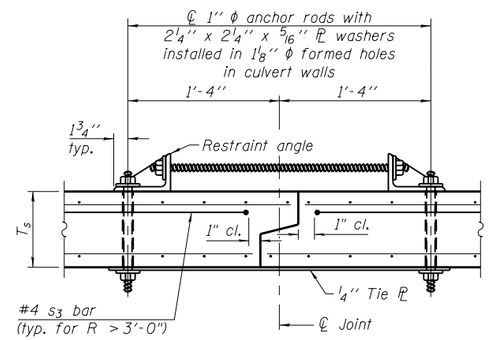

SECTION F-F
(Showing culvert tie details)

TOEWALL CONSTRUCTION SEQUENCE

1. Perform excavation and construct toewall.
2. Backfill accordingly and place bedding for precast box culvert end sections.
3. Set precast box culvert end section.
4. Drill and epoxy grout reinforcement in toewall in accordance with Section 584 of the Standard Specifications.
5. Pressure grout voids using non-shrink grout conforming to Section 1024 of the Standard Specifications.

* The Contractor may furnish a precast or cast-in-place toewall. The Contractor shall be responsible for the strength and stability of the precast toewall during handling. Additional lifting points may be required depending upon the length of the toewall or the Contractor may need to modify the design of the toewall for the proposed handling method.

** If soil conditions permit, the sides of the toewall may be poured directly against the soil. The clear cover on the sides of the toewall shall be increased to 3" by increasing the thickness of the toewall.

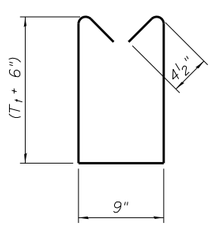

BAR s

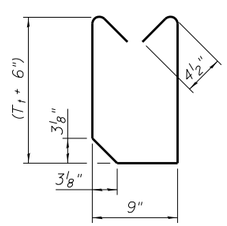

BAR s1

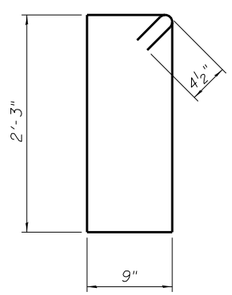

BAR s2

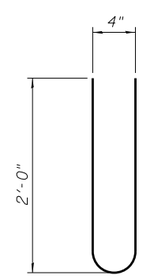

BAR s3

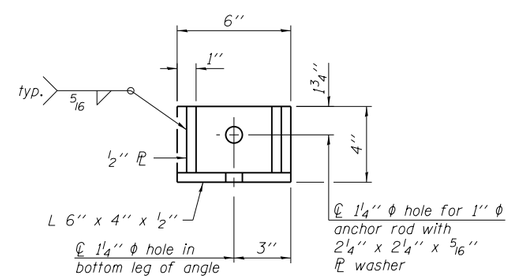

RESTRAINT ANGLE DETAIL

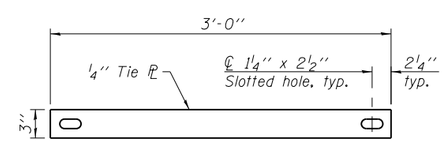

TIE PLATE DETAIL

Notes:

1" ϕ anchor rods for the culvert ties shall conform to the requirements of ASTM F1554, Grade 105. Structural steel for the tie plate and restraint angle shall conform to the requirements of Article 1006.04 of the Standard Specifications. All components of the culvert tie detail shall be galvanized according to the requirements of AASHTO M 111 or M 232 as applicable. 2¼"x2¼"x5/16" plate washers shall be provided under each nut required for the anchor rods. Anchor rods connecting precast sections shall be brought to a snug tight condition followed by an additional ½ turn on one of the nuts for anchor rods installed in the walls. Match marks shall be provided on the bolt and nut to verify relative rotation between the bolt and the nut. Holes in the walls for the culvert tie assembly may be drilled using core bits in lieu of using formed holes.

SCB-AES-2

11-5-13

(Sheet 2 of 2)

FILE NAME =	USER NAME =	DESIGNED -	REVISED
		CHECKED -	REVISED
	PLOT SCALE =	DRAWN -	REVISED
	PLOT DATE =	CHECKED -	REVISED

STATE OF ILLINOIS
DEPARTMENT OF TRANSPORTATION

PRECAST CONCRETE BOX CULVERT
APRON END SECTION DETAILS

SHEET NO. OF SHEETS

F.A.P RTE.	SECTION	COUNTY	TOTAL SHEETS	SHEET NO.
685/538	(112)RS-3,L,N,I	HANCOCK	156	81B
		CONTRACT NO. 72C60		
	ILLINOIS	FED. AID PROJECT		

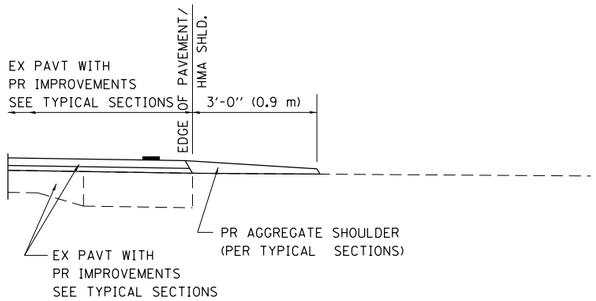

SECTION A-A FOR EX EARTH/ AGGREGATE FE

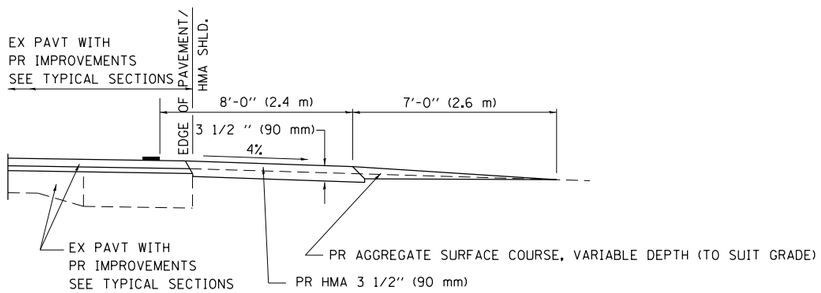

SECTION A-A FOR EX EARTH/AGGREGATE PE

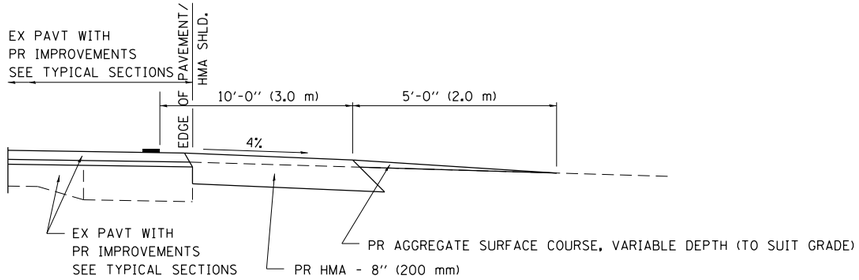

SECTION A-A FOR EX EARTH/AGGREGATE CE & SIDE ROAD

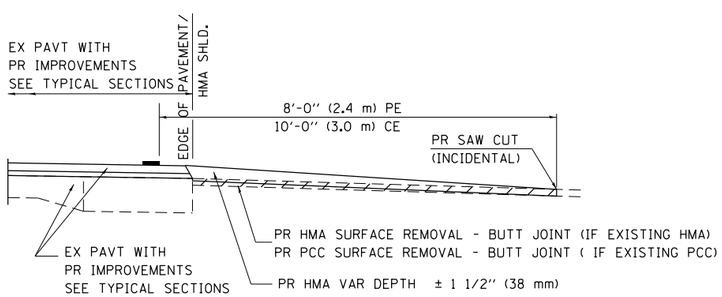

SECTION A-A FOR EX HMA/ PC CONCRETE PE, CE & SIDE ROAD

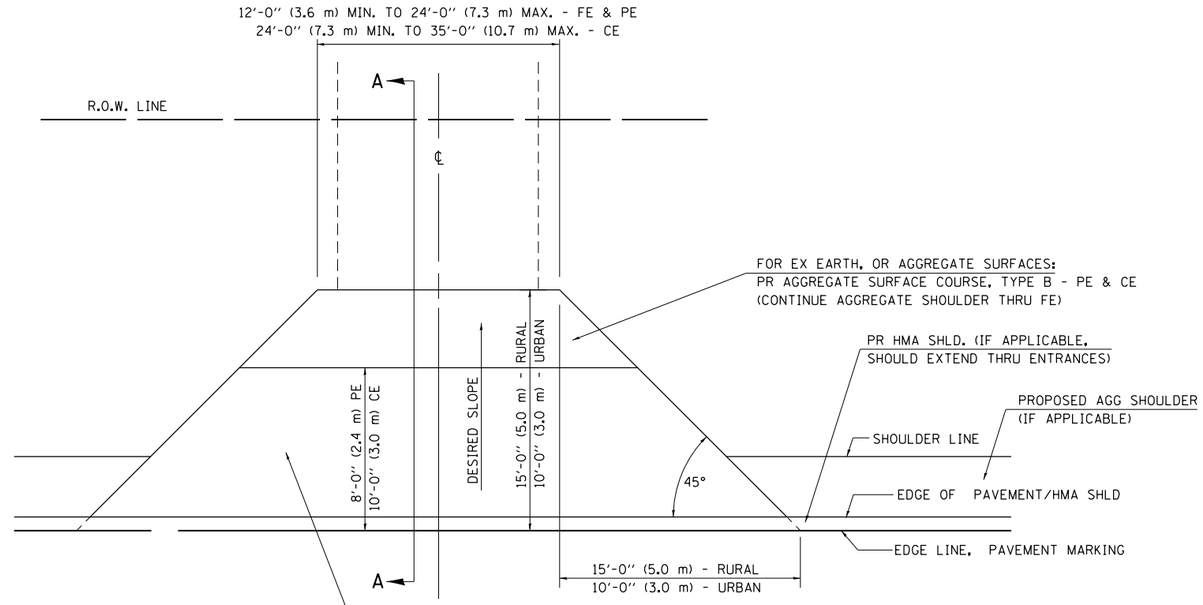

FOR EX EARTH OR AGGREGATE SURFACES:
PR HMA SURFACE REMOVAL (IF APPLICABLE)
PR AGGREGATE SHOULDER THRU - FE
PR HMA CONCRETE 3 1/2 " (90 mm) - PE
PR HMA CONCRETE 8" (200 mm) - CE

FOR EX HMA CONCRETE SURFACES:
PR HMA SURFACE REMOVAL-BUTT JOINT

FOR EX PCC SURFACES:
PR PCC SURFACE REMOVAL-BUTT JOINT

GENERAL NOTES:

THE RESIDENT ENGINEER WILL DETERMINE THE EXACT TYPE OF IMPROVEMENT TO BE COMPLETED FOR ALL ENTRANCES, SIDEROADS AND MAILBOX TURNOUTS ON THIS PROJECT.

THE PLAN DETAILS AND SCHEDULES SHOULD BE USED AS A GUIDE FOR THE ENGINEER TO IMPLEMENT THE FINAL DESIGN. THE ENGINEER MAY DECIDE TO SALVAGE PORTIONS OF THE EXISTING ENTRANCE PAVEMENT STRUCTURE; THEREFORE, REDUCING PAY ITEM QUANTITIES. NO ADDITIONAL PAYMENT WILL BE ALLOWED FOR THIS REDUCTION IN QUANTITIES.

ANY WORK THE ENGINEER REQUIRES WHICH IS NOT COVERED BY A PAY ITEM CONTAINED IN THE PLANS WILL BE PAID FOR IN ACCORDANCE WITH ARTICLE 109.04 OF THE STANDARD SPECIFICATIONS.

HMA CONCRETE REQUIRED TO CONSTRUCT THE ENTRANCES SHALL BE IN ACCORDANCE WITH THE APPLICABLE PORTIONS OF SECTION 406 AND 408 OF THE STANDARD SPECIFICATIONS AND AS DIRECTED BY THE ENGINEER.

WHEN THE HMA CONCRETE PROPOSED FOR THE IMPROVEMENT IS THICKER THAN 3 INCHES (75 mm) AND REQUIRE PLACEMENT IN MORE THAN ONE LIFT. THE BOTTOM LIFT(S) SHALL MEET THE REQUIREMENTS OF HMA BASE COURSE IN SECTION 406 OF THE STANDARD SPECIFICATIONS AND THE TOP LIFT OF 2 INCHES (50 mm) SHALL MEET THE REQUIREMENTS OF HMA CONCRETE SURFACE COURSE, SUPERPAVE.

THIS WORK WILL BE PAID FOR IN ACCORDANCE WITH SECTIONS 351, 358, 408, 423 AND 440 OF THE STANDARD SPECIFICATIONS.

SIDEROAD

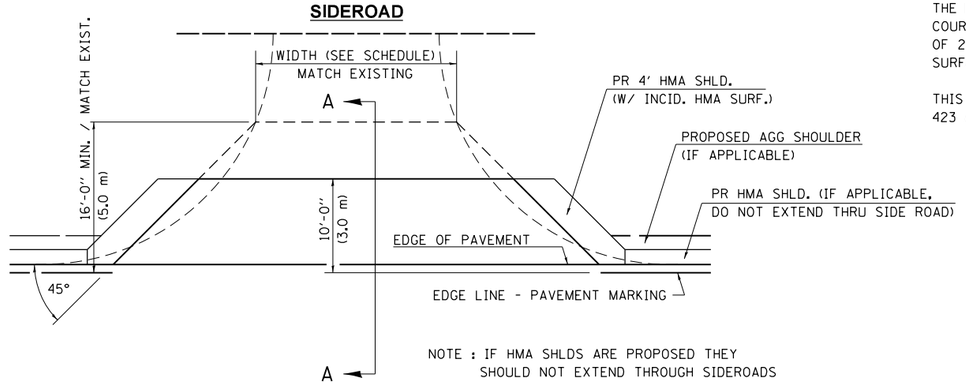

NOTE : IF HMA SHLDS ARE PROPOSED THEY
SHOULD NOT EXTEND THROUGH SIDEROADS

ALL DIMENSIONS ARE IN INCHES (MILLIMETERS)
UNLESS OTHERWISE SHOWN.

FILE NAME = pw:\\IL084EBIDINTEG.illinois.gov:PWIDOT\Documents\IDOT Offices\District 6\Projects\D672C60\DRAWING	USER NAME = sparksgw	DESIGNED -	REVISED -
		CHECKED -	REVISED -
	PLOT SCALE = 100.0000 ' / in.	DATE -	REVISED -
	PLOT DATE = 10/23/2014		

STATE OF ILLINOIS
DEPARTMENT OF TRANSPORTATION

DIST. 6 DETAILS FOR RURAL/URBAN ENT., MAILBOX TURNOUT & SIDEROADS W/O CONC. GUTTER (3P-PROJ.)

SCALE: none | SHEET NO. 3 OF 6 SHEETS | STA. | TO STA.

F.A.P RTE.	SECTION	COUNTY	TOTAL SHEETS	SHEET NO.
685/538	(112)RS-3, L, N, I	HANCOCK	156	82
		CONTRACT NO. 72C60		

FED. ROAD DIST. NO. 6 | ILLINOIS | FED. AID PROJECT

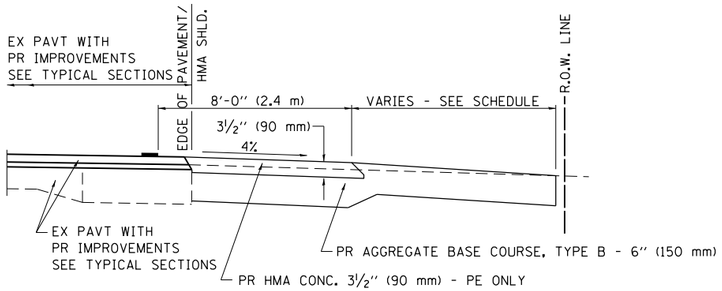

SECTION A-A FOR EX EARTH/AGGREGATE FE & PE

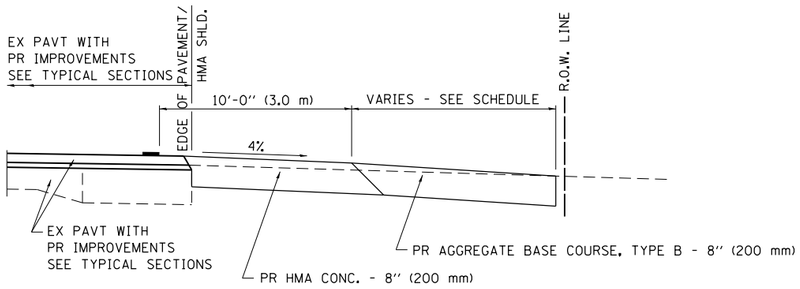

SECTION A-A FOR EX EARTH/AGGREGATE CE

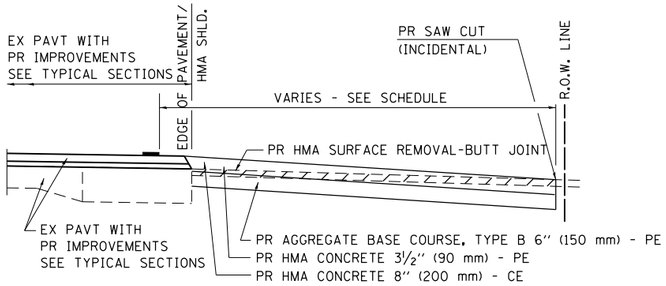

SECTION A-A FOR EX HMA PE & CE

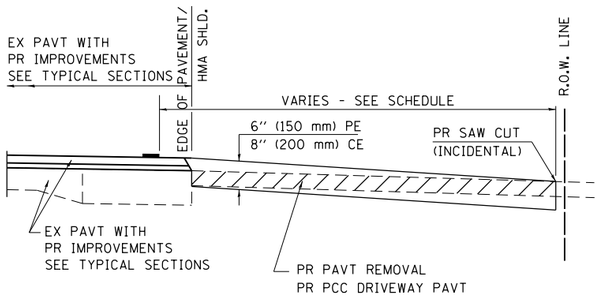

SECTION A-A FOR EX P.C. CONC. PE & CE

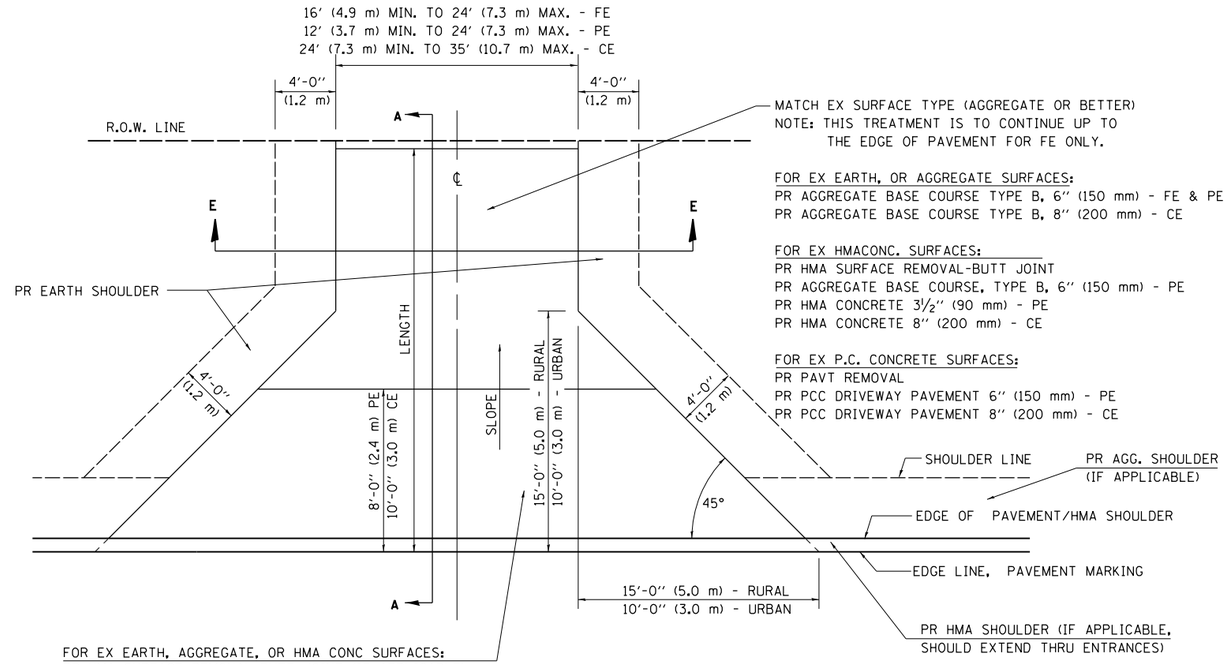

MATCH EX SURFACE TYPE (AGGREGATE OR BETTER)
NOTE: THIS TREATMENT IS TO CONTINUE UP TO THE EDGE OF PAVEMENT FOR FE ONLY.

FOR EX EARTH, OR AGGREGATE SURFACES:
PR AGGREGATE BASE COURSE TYPE B, 6" (150 mm) - FE & PE
PR AGGREGATE BASE COURSE TYPE B, 8" (200 mm) - CE

FOR EX HMACONC. SURFACES:
PR HMA SURFACE REMOVAL-BUTT JOINT
PR AGGREGATE BASE COURSE, TYPE B, 6" (150 mm) - PE
PR HMA CONCRETE 3½" (90 mm) - PE
PR HMA CONCRETE 8" (200 mm) - CE

FOR EX P.C. CONCRETE SURFACES:
PR PAVT REMOVAL
PR PCC DRIVEWAY PAVEMENT 6" (150 mm) - PE
PR PCC DRIVEWAY PAVEMENT 8" (200 mm) - CE

FOR EX EARTH, AGGREGATE, OR HMA CONC SURFACES:
PR HMA SURFACE REMOVAL-BUTT JOINT (IF APPLICABLE)
PR AGGREGATE BASE COURSE TYPE B 6" (150 mm) - FE
PR AGGREGATE BASE COURSE TYPE B, 6" (150 mm) &
PR HMA CONCRETE 3½" (90 mm) - PE
PR HMA CONCRETE 8" (200 mm) - CE

FOR P.C. CONCRETE SURFACES:
PR PAVT REMOVAL
PR PCC DRIVEWAY PAVT 6" (150 mm) - PE
PR PCC DRIVEWAY PAVT 8" (200 mm) - CE

GENERAL NOTES:

THE RESIDENT ENGINEER WILL DETERMINE THE EXACT TYPE OF IMPROVEMENT TO BE COMPLETED FOR ALL ENTRANCES, SIDEROADS AND MAILBOX TURNOUTS ON THIS PROJECT.

THE PLAN DETAILS AND SCHEDULES SHOULD BE USED AS A GUIDE FOR THE ENGINEER TO IMPLEMENT THE FINAL DESIGN. THE ENGINEER MAY DECIDE TO SALVAGE PORTIONS OF THE EXISTING ENTRANCE PAVEMENT STRUCTURE; THEREFORE, REDUCING PAY ITEM QUANTITIES. NO ADDITIONAL PAYMENT WILL BE ALLOWED FOR THIS REDUCTION IN QUANTITIES.

ANY WORK THE ENGINEER REQUIRES WHICH IS NOT COVERED BY A PAY ITEM CONTAINED IN THE PLANS WILL BE PAID FOR IN ACCORDANCE WITH ARTICLE 109.04 OF THE STANDARD SPECIFICATIONS.

HMA CONCRETE REQUIRED TO CONSTRUCT THE ENTRANCES SHALL BE IN ACCORDANCE WITH THE APPLICABLE PORTIONS OF SECTION 406 AND 408 OF THE STANDARD SPECIFICATIONS AND AS DIRECTED BY THE ENGINEER.

WHEN THE HMA CONCRETE PROPOSED FOR THE IMPROVEMENT IS THICKER THAN 3 INCHES (75 mm) AND REQUIRE PLACEMENT IN MORE THAN ONE LIFT. THE BOTTOM LIFT(S) SHALL MEET THE REQUIREMENTS OF HMA BASE COURSE IN SECTION 406 OF THE STANDARD SPECIFICATIONS AND THE TOP LIFT OF 2 INCHES (50 mm) SHALL MEET THE REQUIREMENTS OF HMA CONCRETE SURFACE COURSE, SUPERPAVE.

THIS WORK WILL BE PAID FOR IN ACCORDANCE WITH SECTIONS 351, 358, 408, 423 AND 440 OF THE STANDARD SPECIFICATIONS.

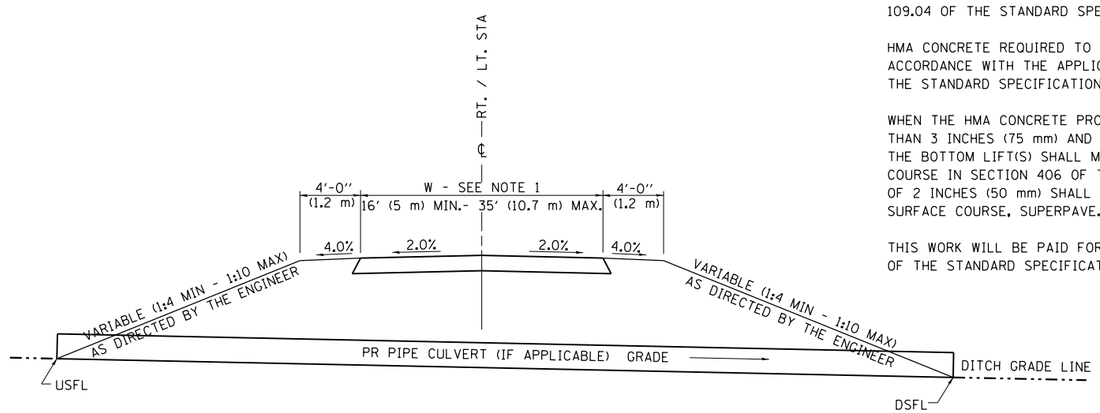

SECTION E - E ENTRANCE TYPICAL SECTION

NOTE 1: WIDTH OF ENTRANCE MAY BE INCREASED AT THE PIPE CULVERT DUE TO THE DITCHLINE BEING LOCATED IN THE ENTRANCE FLARE AREA.

ALL DIMENSIONS ARE IN INCHES (MILLIMETERS) UNLESS OTHERWISE SHOWN.

FILE NAME = pw:\\IL084EBIDINTEG.illinois.gov:PWIDOT\Documents\IDOT Offices\District 6\Projects\D672C60\DRAWINGs\KLINGNER\District edit\CADD Files\72C60-sht-Details.dgn	USER NAME = sparksgw	DESIGNED -	REVISED -
		CHECKED -	REVISED -
	PLOT SCALE = 100.0000 ' / in.	DATE -	REVISED -
	PLOT DATE = 10/23/2014		

STATE OF ILLINOIS
DEPARTMENT OF TRANSPORTATION

DISTRICT 6 DETAILS FOR RURAL /URBAN ENTRANCE & MAILBOX TURNOUT W/O CONC GUTTER (3R – PROJECTS)

SCALE: none | SHEET NO. 4 OF 6 SHEETS | STA. | TO STA.

F.A.P RTE.	SECTION	COUNTY	TOTAL SHEETS	SHEET NO.
685/538	(112)RS-3, L, N, I	HANCOCK	156	83
		CONTRACT NO. 72C60		

FED. ROAD DIST. NO. 6 | ILLINOIS | FED. AID PROJECT

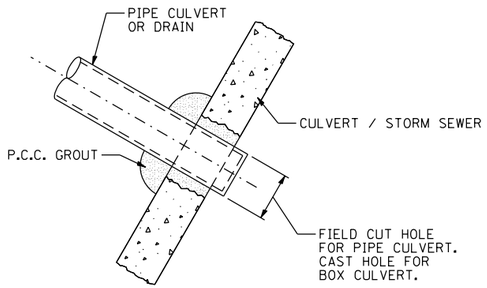

DETAIL OF PLACING PIPE IN CULVERT

NOTE: COST OF PLACING PIPE IN THE CULVERT SHALL BE INCLUDED IN THE PAY ITEM FOR THE CULVERT OR STORM SEWER.

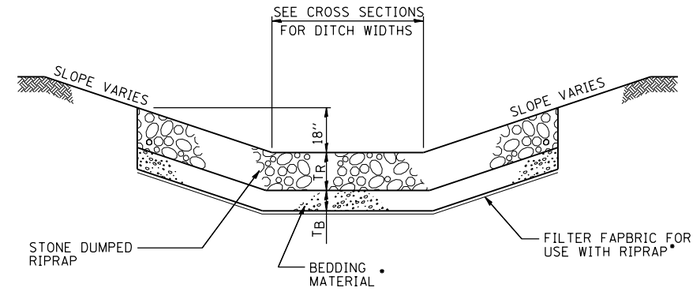

RIPRAP CLASS	RIPRAP THICKNESS (T_R)	BEDDING THICKNESS (T_B)
B3	12"	•
A4	16"	6"
A5	22"	8"

• STONE DUMP RIPRAP CLASS B-3 HAS NO BEDDING MATERIAL OR FILTER FABRIC UNLESS IN SANDY SOILS.

TYPICAL STONE RIPRAP DITCH LINING

SEE SCHEDULE FOR INSTALLATION LOCATIONS

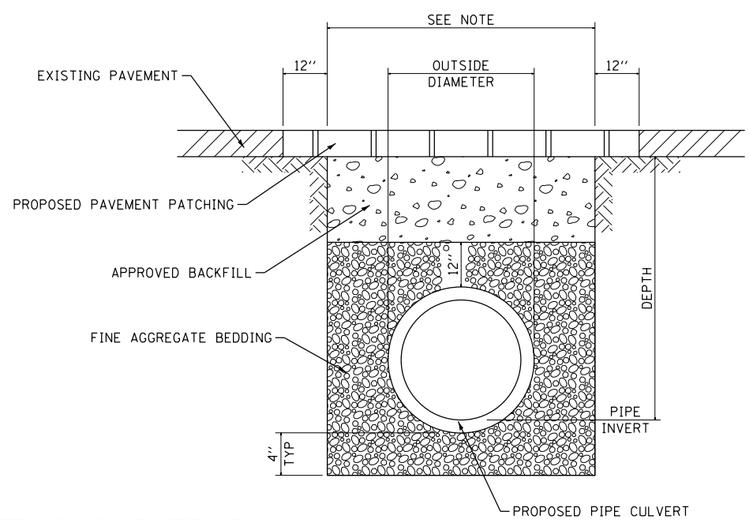

NOTE:
WIDTH = OUTSIDE DIAMETER + 9" + 9" WHEN DEPTH < 5'
WIDTH = OUTSIDE DIAMETER + 18" + 18" WHEN DEPTH > 5'

DETAIL OF TRENCH EXCAVATION, PAVEMENT REMOVAL, PAVEMENT PATCHING, AND BACKFILL UNDER EXISTING PAVEMENT

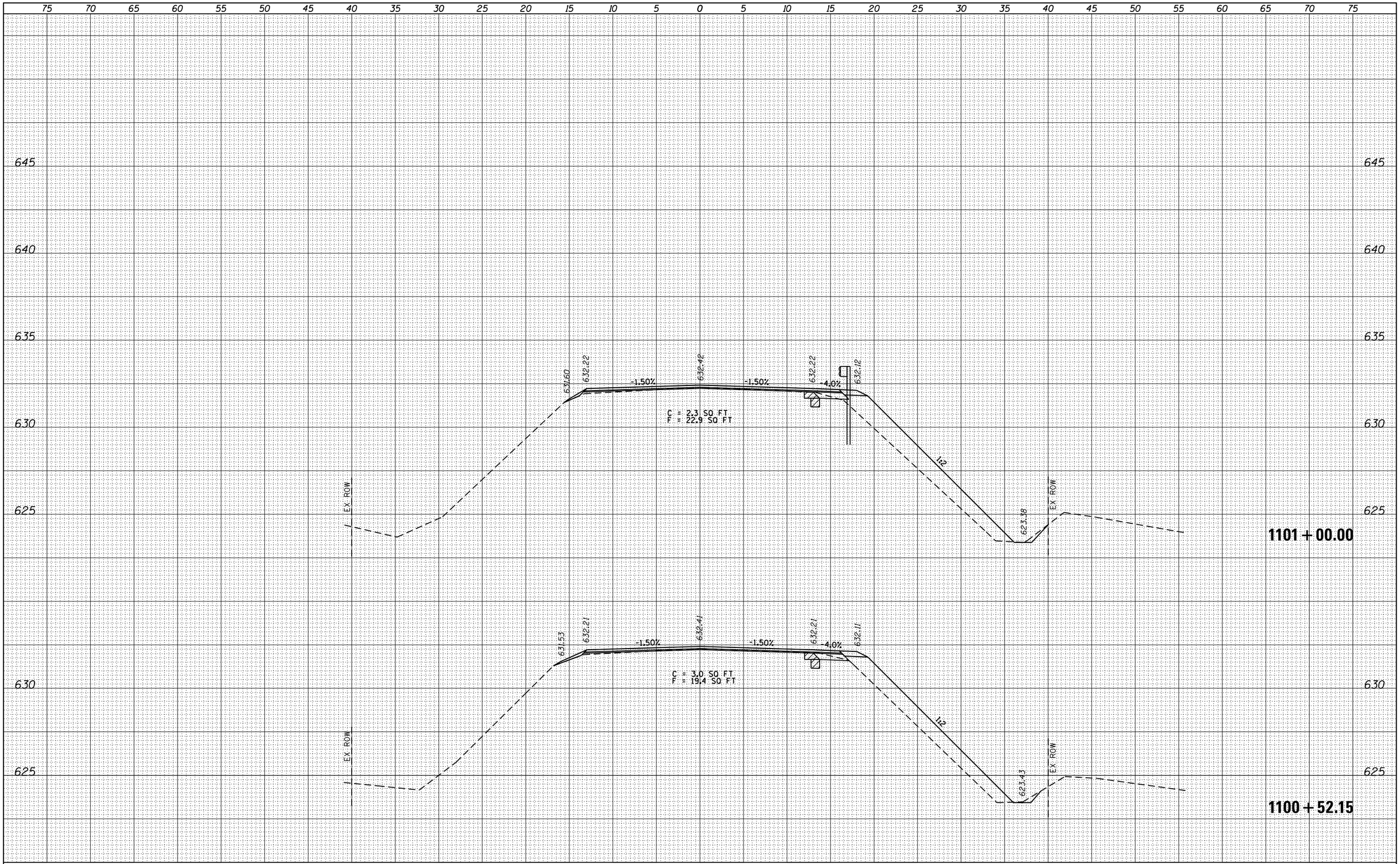

FINAL SURVEY	BY	DATE
SURVEYED		
PLOTTED		
TEMPLATE		
AREAS		
AREAS CHECKED		
NOTE BOOK NO.		

ORIGINAL SURVEY	BY	DATE
SURVEYED		
PLOTTED		
TEMPLATE		
AREAS		
AREAS CHECKED		
NOTE BOOK NO.		

FILE NAME = c:\pw_work\pwidot\edwardsjd\d0388419\D672C60-sht-xsht_IL 94 SN034-0069.dgn	USER NAME = edwardsjd	DESIGNED -	REVISED -
	PLOT SCALE = 10.0000 ' / in.	DRAWN -	REVISED -
	PLOT DATE = Mar-11-2015 08:29:29AM	CHECKED -	REVISED -
Default		DATE -	REVISED -

STATE OF ILLINOIS
DEPARTMENT OF TRANSPORTATION

CROSS SECTIONS IL 94
S.N. 034-0069

SCALE: | SHEET OF SHEETS | STA. 1100+52.15 TO STA. 1101+00.00

F.A.P. RTE.	SECTION	COUNTY	TOTAL SHEETS	SHEET NO.
*	(112)RS-3,L,N,I	HANCOCK	156	84A
		CONTRACT NO. 72C60		
		ILLINOIS FED. AID PROJECT		

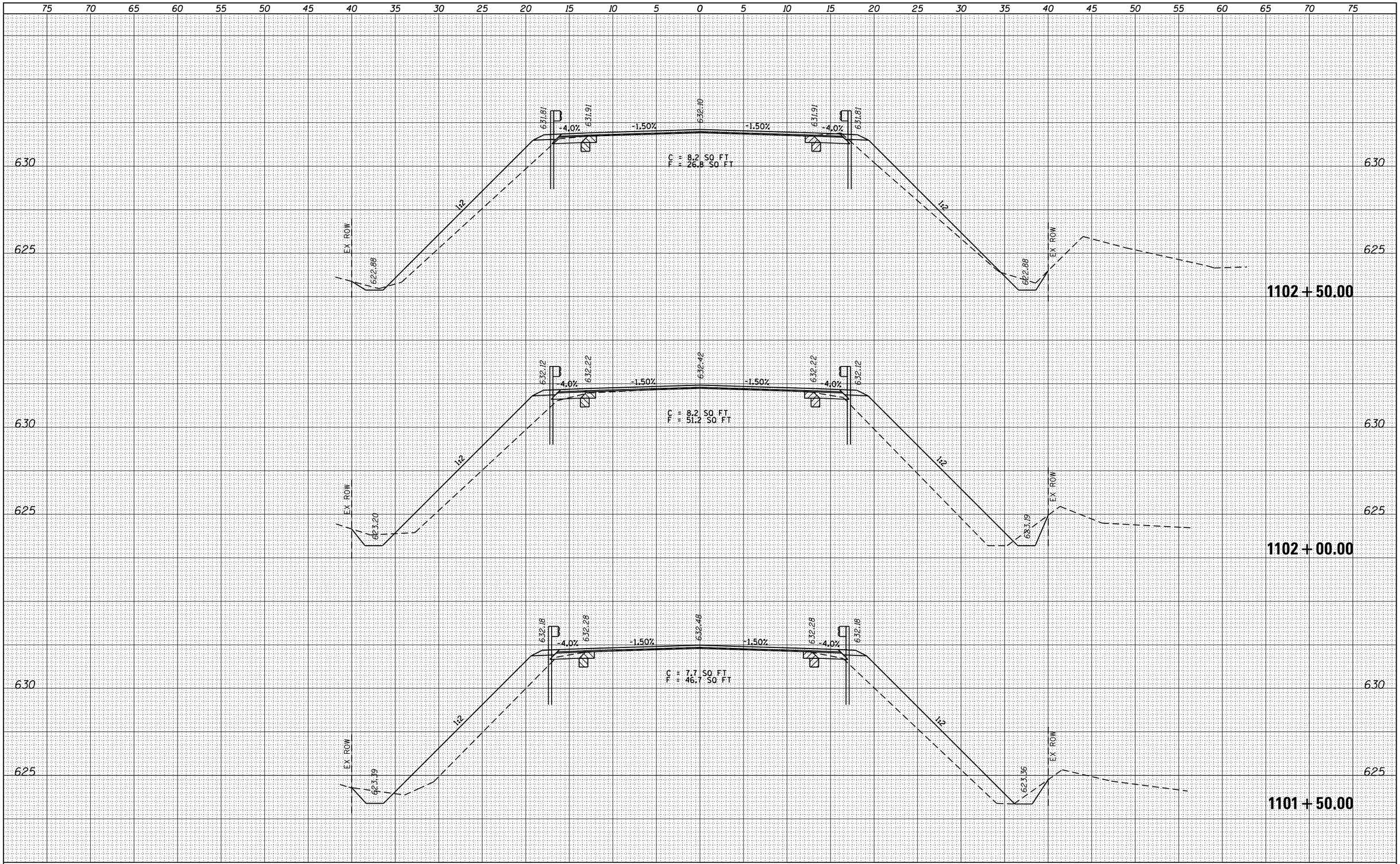

FINAL SURVEY	BY	DATE
SURVEYED		
PLOTTED		
TEMPLATE		
AREAS		
AREAS CHECKED		
NOTE BOOK NO.		

ORIGINAL SURVEY	BY	DATE
SURVEYED		
PLOTTED		
TEMPLATE		
AREAS		
AREAS CHECKED		
NOTE BOOK NO.		

FILE NAME = c:\pw_work\pwidot\edwardsjd\d0388419\D672C60-sht-xsht_IL 94 SN034-0069.dgn	USER NAME = edwardsjd	DESIGNED -	REVISED -
	PLOT SCALE = 10.0000 ' / in.	DRAWN -	REVISED -
	PLOT DATE = Mar-11-2015 08:29:29AM	CHECKED -	REVISED -
Default		DATE -	REVISED -

STATE OF ILLINOIS
DEPARTMENT OF TRANSPORTATION

CROSS SECTIONS IL 94
S.N. 034-0069

SCALE: | SHEET OF SHEETS | STA. 1101+50.00 TO STA. 1102+50.00

F.A.P. RTE.	SECTION	COUNTY	TOTAL SHEETS	SHEET NO.
*	(112)RS-3,L,N,I	HANCOCK	156	84B
		CONTRACT NO. 72C60		
		ILLINOIS FED. AID PROJECT		

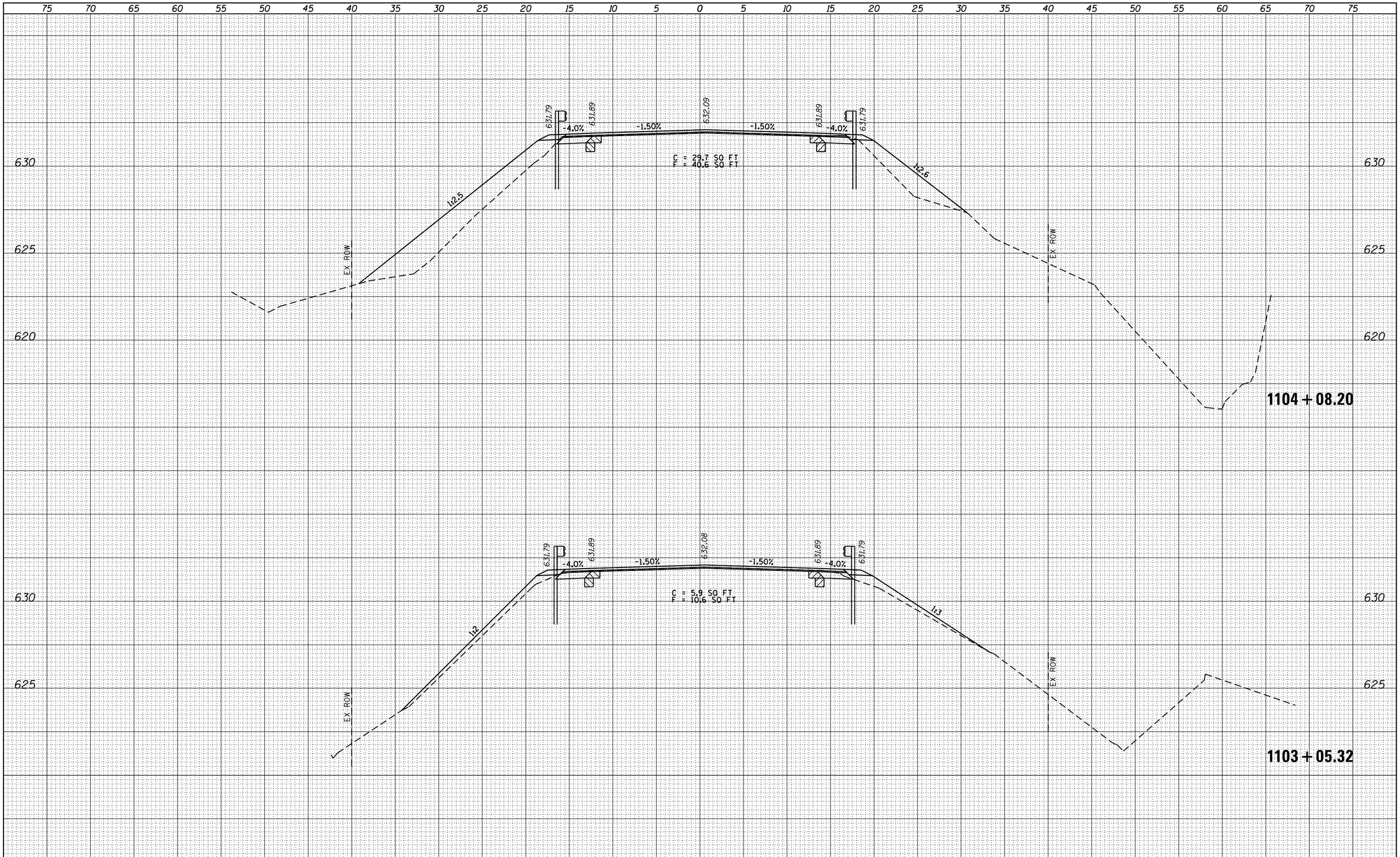

FINAL SURVEY		BY	DATE
NOTE BOOK	SURVEYED		
	PLOTTED		
	TEMPLATE		
	AREAS		
NO.	AREAS CHECKED		

ORIGINAL SURVEY		BY	DATE
NOTE BOOK	SURVEYED		
	PLOTTED		
	TEMPLATE		
	AREAS		
NO.	AREAS CHECKED		

FILE NAME = c:\pw_work\pwidot\edwardsjd\d0388419\D672C60-sht-xsht_IL 94 SN034-0069.dgn	USER NAME = edwardsjd	DESIGNED -	REVISED -
		DRAWN -	REVISED -
	PLOT SCALE = 10.0000 ' / in.	CHECKED -	REVISED -
Default	PLOT DATE = Mar-11-2015 08:29:29AM	DATE -	REVISED -

STATE OF ILLINOIS
DEPARTMENT OF TRANSPORTATION

CROSS SECTIONS IL 94
S.N. 034-0069

SCALE: | SHEET OF SHEETS | STA. 1103+05.32 TO STA. 1104+08.20

F.A.P. RTE.	SECTION	COUNTY	TOTAL SHEETS	SHEET NO.
*	(112)RS-3,L,N,I	HANCOCK	156	84C
		CONTRACT NO. 72C60		
		ILLINOIS FED. AID PROJECT		

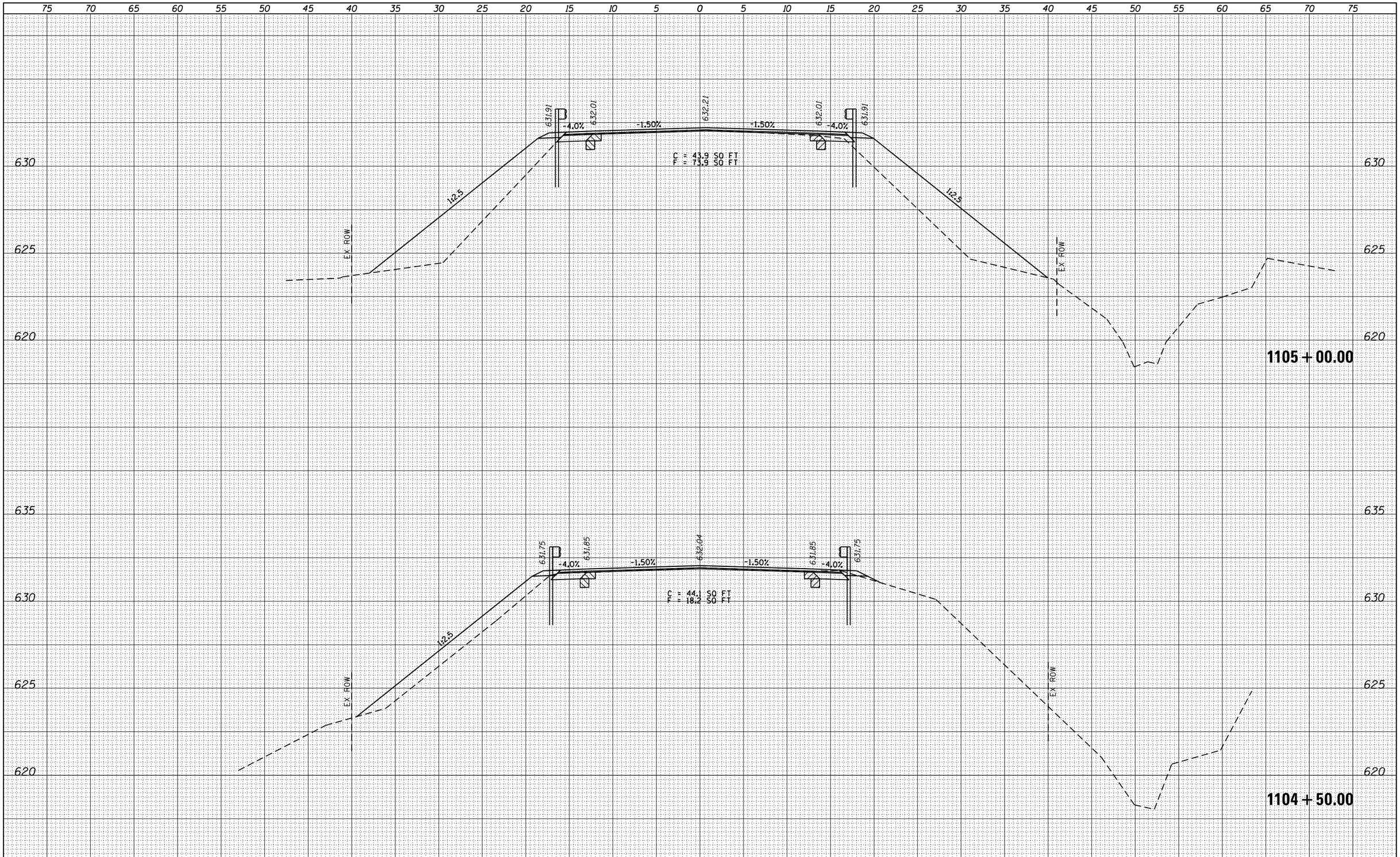

FINAL SURVEY	BY	DATE
NOTE BOOK	SURVEYED	
	PLOTTED	
	TEMPLATE	
	AREAS	
NO.	AREAS CHECKED	

ORIGINAL SURVEY	BY	DATE
NOTE BOOK	SURVEYED	
	PLOTTED	
	TEMPLATE	
	AREAS	
NO.	AREAS CHECKED	

FILE NAME = c:\pw_work\pwidot\edwardsjd\d0388419\D672C60-sht-xsht_IL 94 SN034-0069.dgn	USER NAME = edwardsjd	DESIGNED -	REVISED -
	PLOT SCALE = 10.0000 ' / in.	DRAWN -	REVISED -
	PLOT DATE = Mar-11-2015 08:29:30AM	CHECKED -	REVISED -
Default		DATE -	REVISED -

STATE OF ILLINOIS
DEPARTMENT OF TRANSPORTATION

CROSS SECTIONS IL 94
S.N. 034-0069

SCALE: | SHEET OF SHEETS | STA. 1104+50.00 TO STA. 1105+00.00

F.A.P. RTE.	SECTION	COUNTY	TOTAL SHEETS	SHEET NO.
*	(112)RS-3,L,N,I	HANCOCK	156	84D
		CONTRACT NO. 72C60		
		ILLINOIS FED. AID PROJECT		

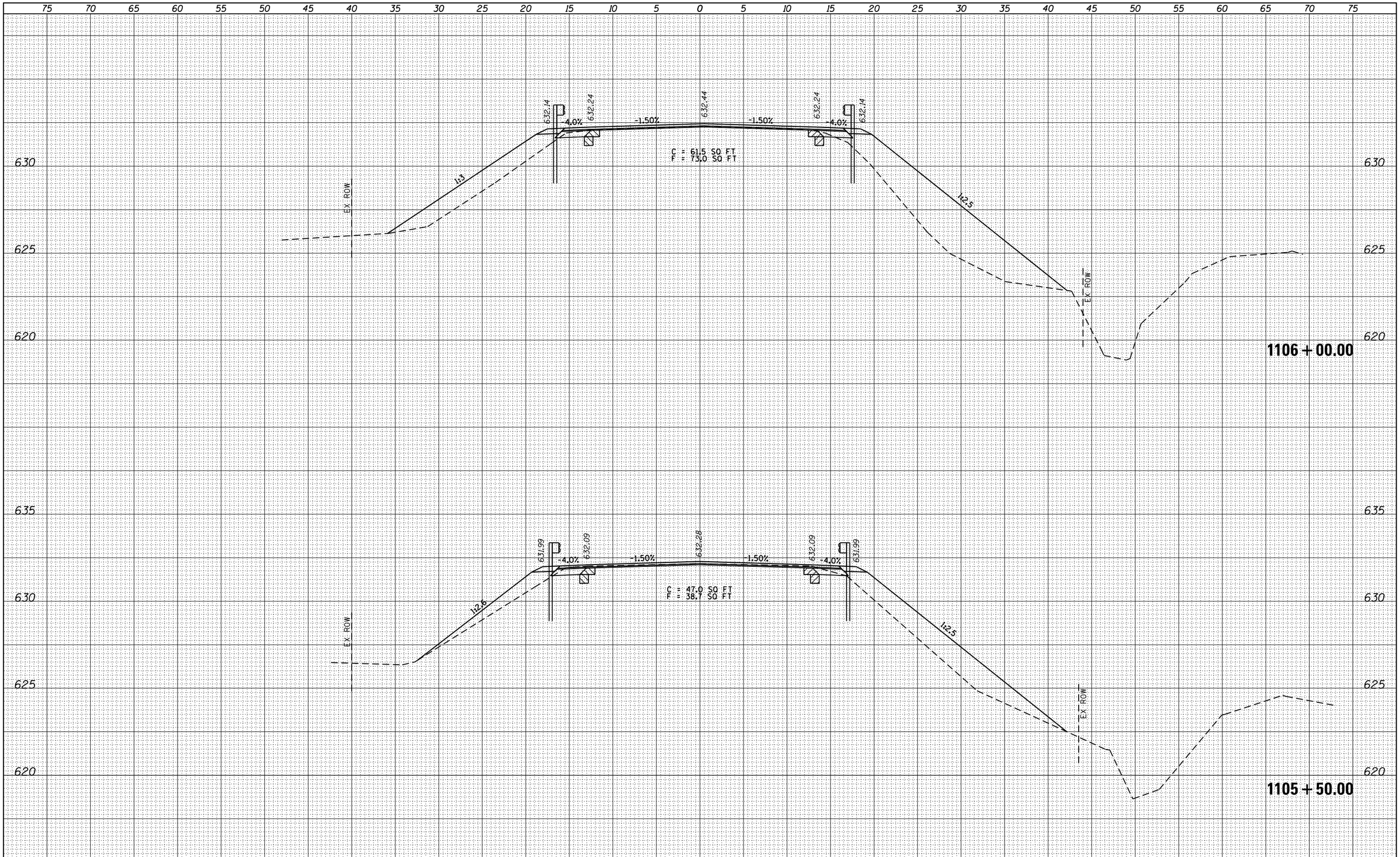

FINAL SURVEY	BY	DATE
SURVEYED		
PLOTTED		
TEMPLATE		
AREAS		
AREAS CHECKED		
NOTE BOOK NO.		

ORIGINAL SURVEY	BY	DATE
SURVEYED		
PLOTTED		
TEMPLATE		
AREAS		
AREAS CHECKED		
NOTE BOOK NO.		

FILE NAME = c:\pw_work\pwidot\edwardsjd\d0388419\D672C60-sht-xsht_IL 94 SN034-0069.dgn	USER NAME = edwardsjd	DESIGNED -	REVISED -
	PLOT SCALE = 10.0000 ' / in.	DRAWN -	REVISED -
	PLOT DATE = Mar-11-2015 08:29:30AM	CHECKED -	REVISED -
Default		DATE -	REVISED -

STATE OF ILLINOIS
DEPARTMENT OF TRANSPORTATION

CROSS SECTIONS IL 94
S.N. 034-0069

SCALE: | SHEET OF SHEETS | STA. 1105+50.00 TO STA. 1106+00.00

F.A.P. RTE.	SECTION	COUNTY	TOTAL SHEETS	SHEET NO.
*	(112)RS-3,L,N,I	HANCOCK	156	84E

CONTRACT NO. 72C60

ILLINOIS FED. AID PROJECT

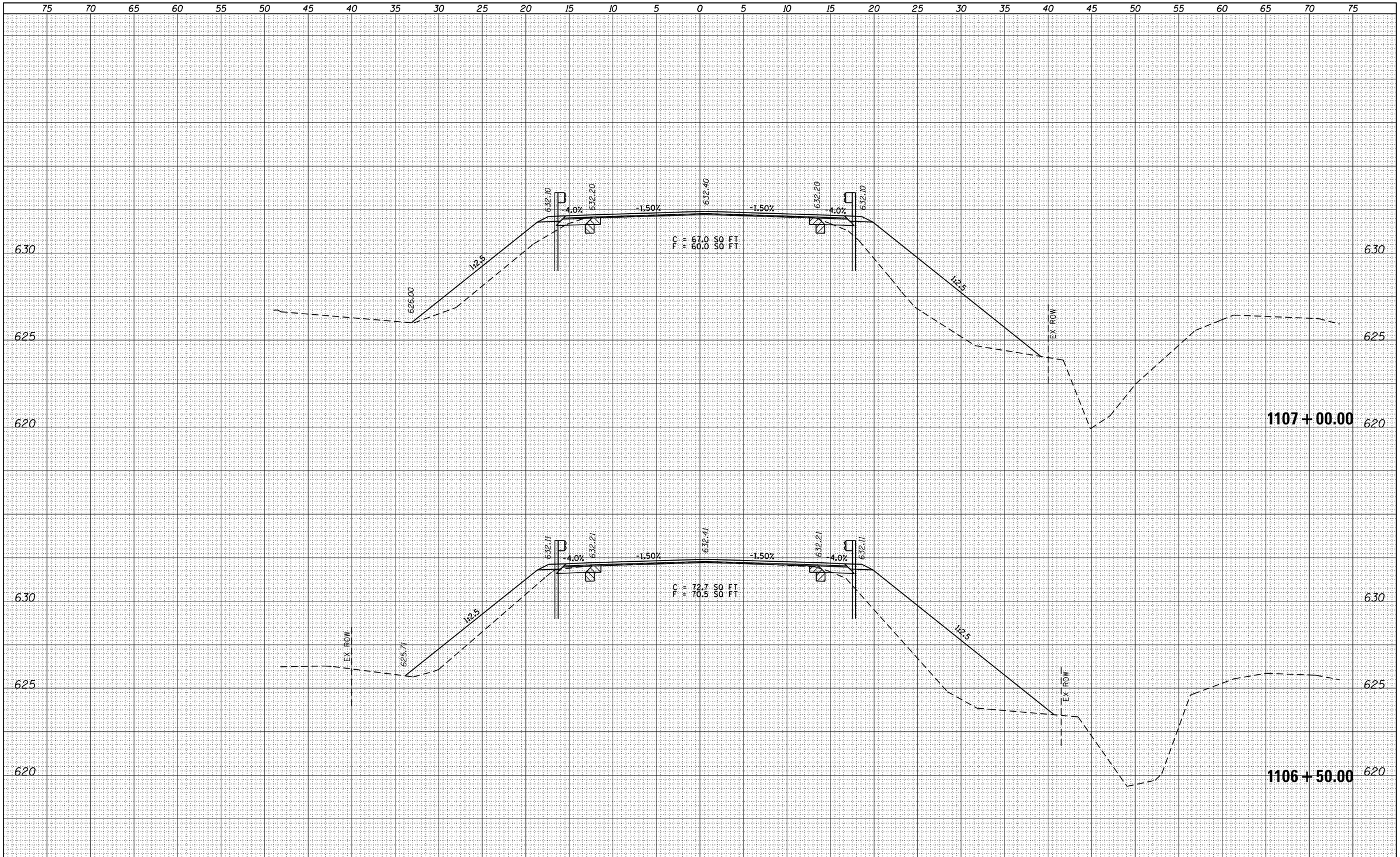

FINAL SURVEY	BY	DATE
SURVEYED		
PLOTTED		
TEMPLATE		
AREAS		
AREAS CHECKED		
NOTE BOOK NO.		

ORIGINAL SURVEY	BY	DATE
SURVEYED		
PLOTTED		
TEMPLATE		
AREAS		
AREAS CHECKED		
NOTE BOOK NO.		

FILE NAME = c:\pw_work\pwidot\edwardsjd\d0388419\D672C60-sht-xsht_IL 94 SN034-0069.dgn	USER NAME = edwardsjd	DESIGNED -	REVISED -
	PLOT SCALE = 10.0000 ' / in.	DRAWN -	REVISED -
	PLOT DATE = Mar-11-2015 08:29:30AM	CHECKED -	REVISED -
Default		DATE -	REVISED -

STATE OF ILLINOIS
DEPARTMENT OF TRANSPORTATION

CROSS SECTIONS IL 94
S.N. 034-0069

SCALE: | SHEET OF SHEETS | STA. 1106+50.00 TO STA. 1107+00.00

F.A.P. RTE.	SECTION	COUNTY	TOTAL SHEETS	SHEET NO.
*	(112)RS-3,L,N,I	HANCOCK	156	84F

CONTRACT NO. 72C60

ILLINOIS FED. AID PROJECT

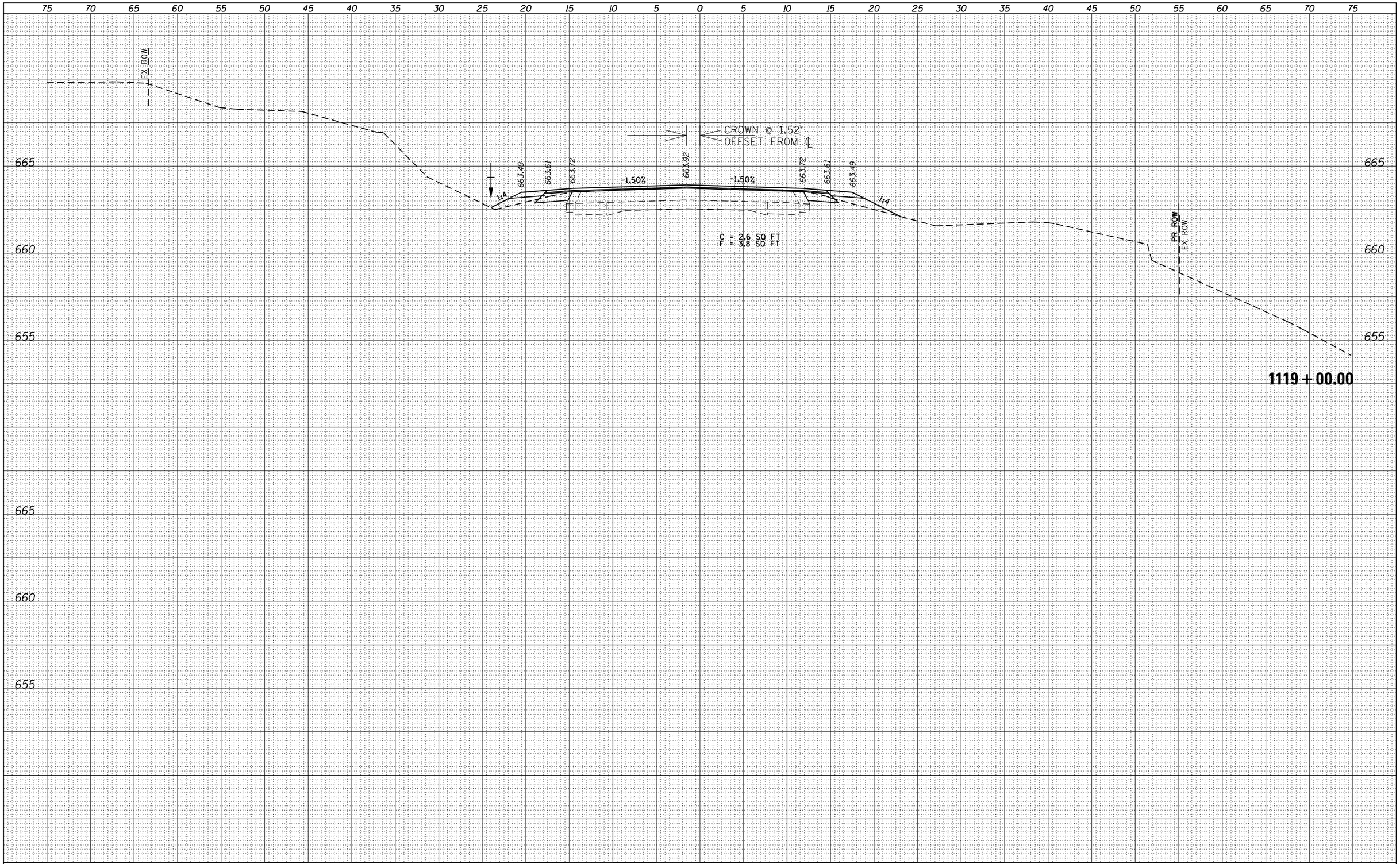

FINAL SURVEY	BY	DATE
SURVEYED		
PLOTTED		
TEMPLATE		
AREAS		
AREAS CHECKED		
NOTE BOOK NO.		

ORIGINAL SURVEY	BY	DATE
SURVEYED		
PLOTTED		
TEMPLATE		
AREAS		
AREAS CHECKED		
NOTE BOOK NO.		

FILE NAME = pw:\\IL084EBIDINTEG.illinois.gov:PWIDOT\Documents\IDOT Offices\District 6\Projects\D672C60\CADD\ENGINEER\District edit\CADD Sheets\xs94(IDOT).dgn	USER NAME = sparksgw	DESIGNED -	REVISED -
	PLOT SCALE = 10.0000 ' / in.	CHECKED -	REVISED -
Default	PLOT DATE = 10/23/2014	DATE -	REVISED -

STATE OF ILLINOIS
DEPARTMENT OF TRANSPORTATION

CROSS SECTIONS IL 94

SCALE: | SHEET OF SHEETS | STA. 1118+50.00 TO STA. 1119+00.00

F.A.P. RTE.	SECTION	COUNTY	TOTAL SHEETS	SHEET NO.
685/538	(112)RS-3,L,N,I	HANCOCK	156	85

CONTRACT NO. 72C60

ILLINOIS FED. AID PROJECT

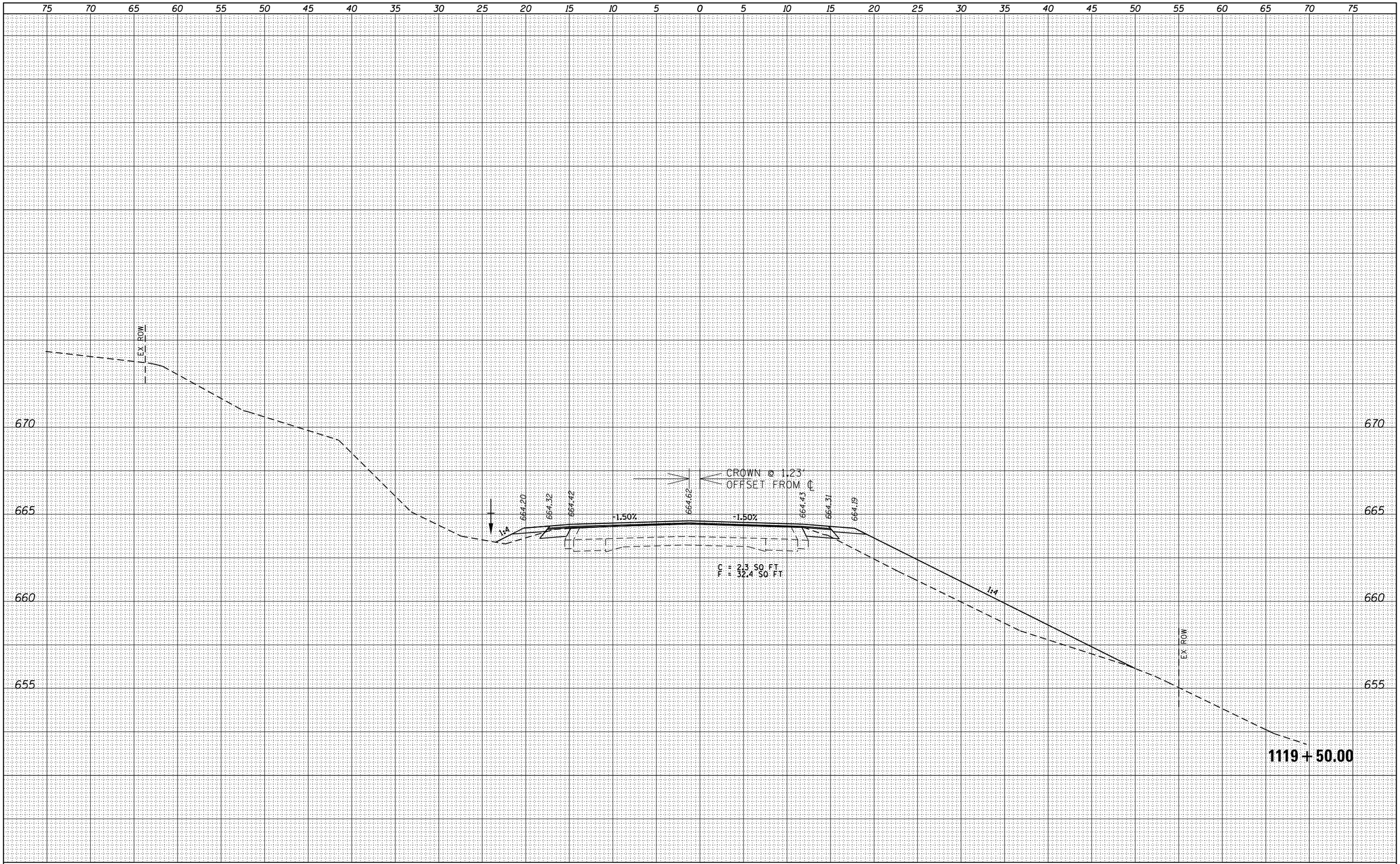

FINAL SURVEY		BY	DATE
	SURVEYED		
	PLOTTED		
NOTE BOOK	TEMPLATE		
	AREAS		
NO.	AREAS CHECKED		

ORIGINAL SURVEY		BY	DATE
	SURVEYED		
	PLOTTED		
NOTE BOOK	TEMPLATE		
	AREAS		
NO.	AREAS CHECKED		

FILE NAME = pw:\\IL084EBIDINTEG.illinois.gov:PWIDOT\Documents\IDOT Offices\District 6\Projects\D672C60\CADD\ENGINEER\District edit\CADD Sheets\xc-sht-94(IDOT).dgn	USER NAME = sparksgw	DESIGNED -	REVISED -
		DRAWN -	REVISED -
	PLOT SCALE = 10.0000 ' / in.	CHECKED -	REVISED -
Default	PLOT DATE = 10/23/2014	DATE -	REVISED -

STATE OF ILLINOIS
DEPARTMENT OF TRANSPORTATION

CROSS SECTIONS IL 94

SCALE: | SHEET OF SHEETS | STA. 1119+50.00 TO STA. 1119+50.00

F.A.P. RTE.	SECTION	COUNTY	TOTAL SHEETS	SHEET NO.
685/538	(112)RS-3,L,N,I	HANCOCK	156	86

CONTRACT NO. 72C60

ILLINOIS FED. AID PROJECT

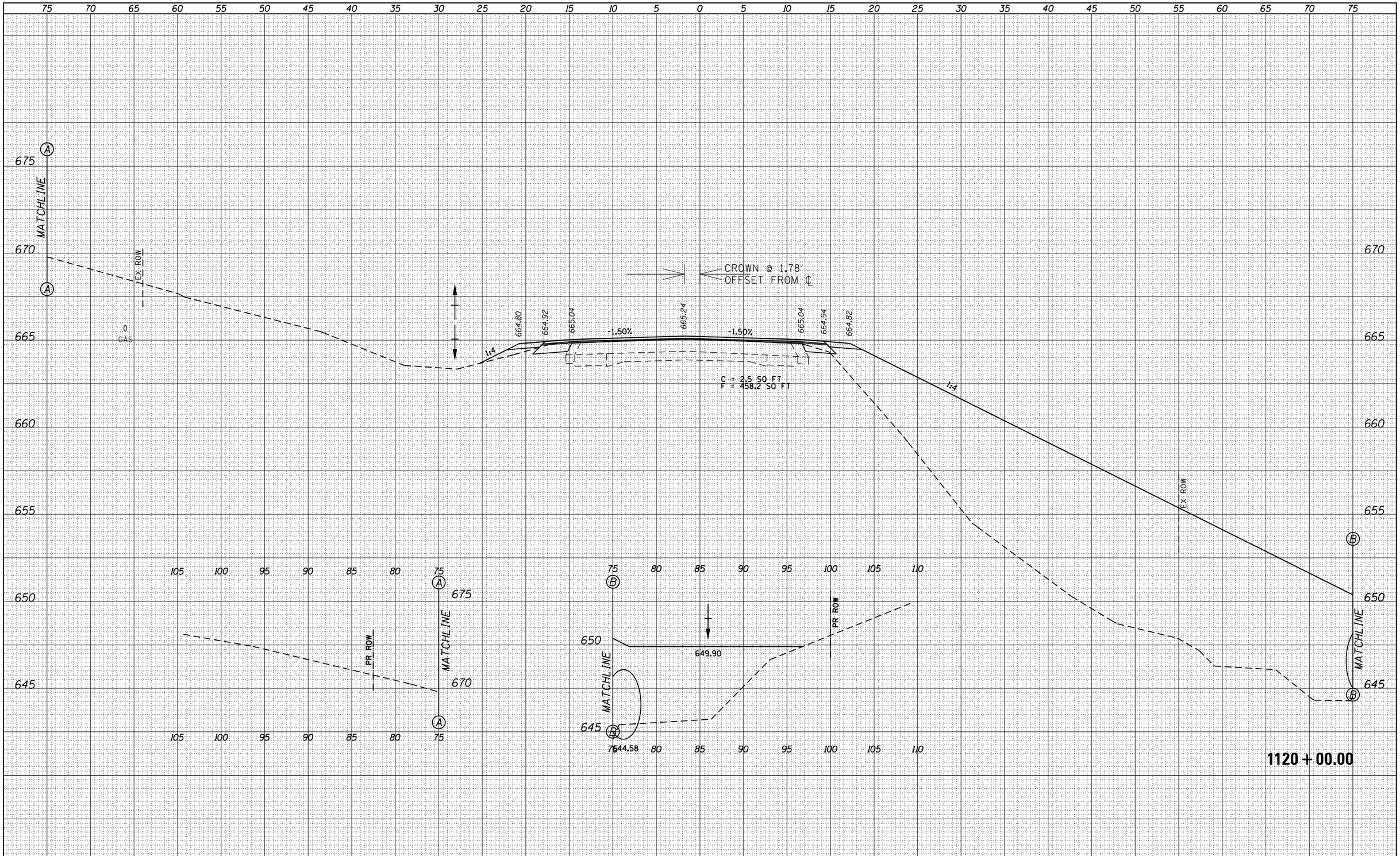

FINAL SURVEY		BY	DATE
NOTE BOOK	SURVEYED		
	PLOTTED		
	TEMPLATE		
	AREAS		
	AREAS CHECKED		
NO.			

ORIGINAL SURVEY		BY	DATE
NOTE BOOK	SURVEYED		
	PLOTTED		
	TEMPLATE		
	AREAS		
	AREAS CHECKED		
NO.			

FILE NAME = c:\pw_work\pwidot\edwardsjd\d0388419\xsc_sht_IL94(IDOT).dgn	USER NAME = edwardsjd	DESIGNED -	REVISED -
		DRAWN -	REVISED -
	PLOT SCALE = 10.0000 ' / in.	CHECKED -	REVISED -
Default	PLOT DATE = Mar-10-2015 02:58:49PM	DATE -	REVISED -

STATE OF ILLINOIS
DEPARTMENT OF TRANSPORTATION

CROSS SECTIONS IL 94

SCALE: | SHEET OF SHEETS | STA. 1120+00.00 TO STA.1120+00.00

F.A.P. RTE.	SECTION	COUNTY	TOTAL SHEETS	SHEET NO.
685/538	(112)RS-3,L,N,I	HANCOCK	156	87

CONTRACT NO. 72C60

ILLINOIS FED. AID PROJECT

FINAL SURVEY		BY	DATE
	SURVEYED		
	PLOTTED		
NOTE BOOK	TEMPLATE		
	AREAS		
NO.	AREAS CHECKED		

ORIGINAL SURVEY		BY	DATE
	SURVEYED		
	PLOTTED		
NOTE BOOK	TEMPLATE		
	AREAS		
NO.	AREAS CHECKED		

SHEET
INTENTIONALLY
LEFT BLANK

FILE NAME =	USER NAME = edwardsjd	DESIGNED -	REVISED -
c:\pw_work\pwidot\edwardsjd\d0388419\xsc_sht_IL94(IDOT).dgn		DRAWN -	REVISED -
	PLOT SCALE = 10.0000 ' / in.	CHECKED -	REVISED -
Default	PLOT DATE = Mar-10-2015 02:58:50PM	DATE -	REVISED -

STATE OF ILLINOIS
DEPARTMENT OF TRANSPORTATION

CROSS SECTIONS IL 94

SCALE: | SHEET OF SHEETS | STA. TO STA.

F.A.P. RTE.	SECTION	COUNTY	TOTAL SHEETS	SHEET NO.
685/538	(112)RS-3,L,N,I	HANCOCK	156	88
		CONTRACT NO. 72C60		
	ILLINOIS FED. AID PROJECT			

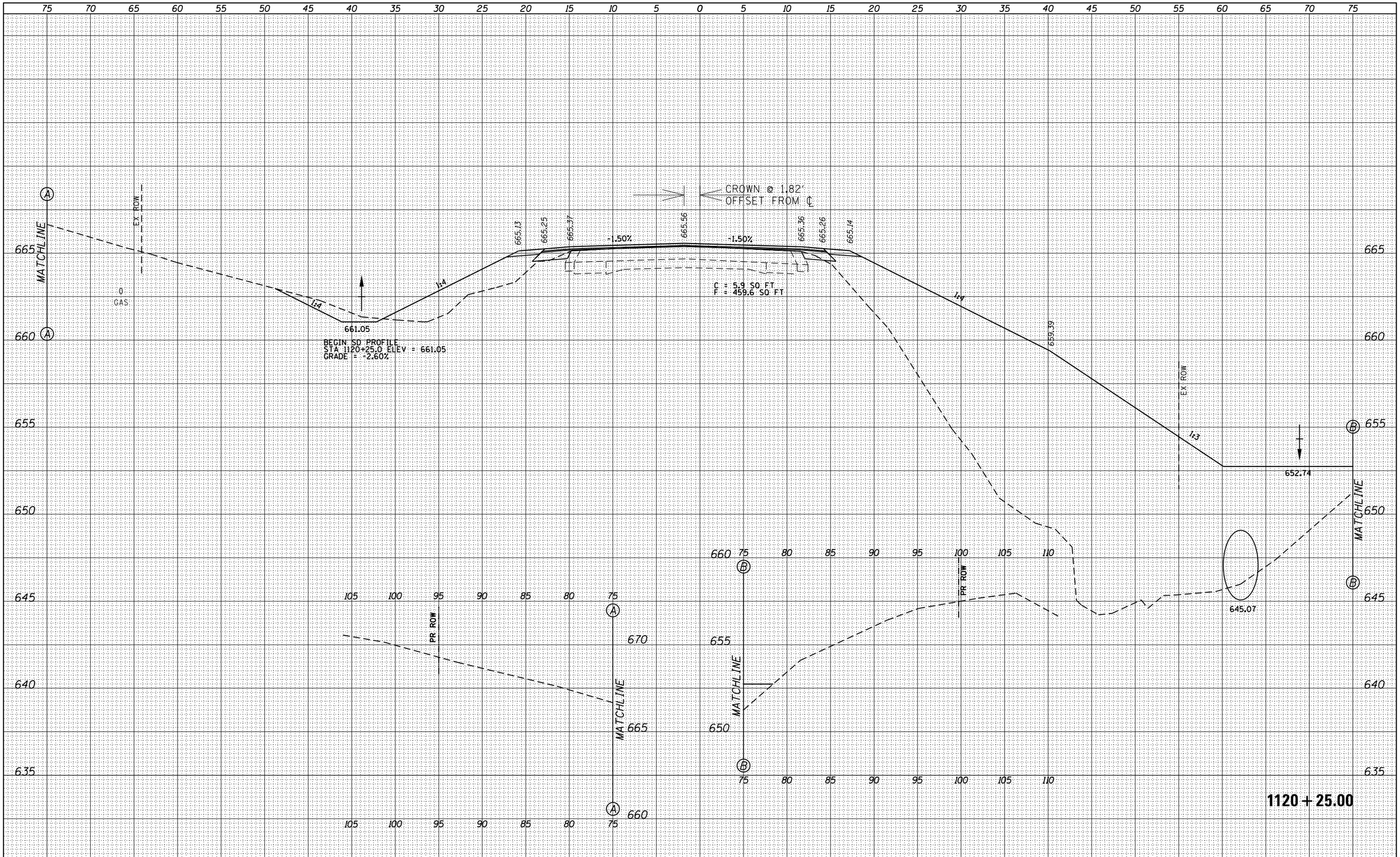

FINAL SURVEY	BY	DATE
NOTE BOOK		
NO.		

SURVEYED
PLOTTED
TEMPLATE
AREAS
AREAS CHECKED

ORIGINAL SURVEY	BY	DATE
NOTE BOOK		
NO.		

SURVEYED
PLOTTED
TEMPLATE
AREAS
AREAS CHECKED

FILE NAME = c:\pw_work\pwidot\edwardsjd\d0388419\xsc_sht_IL94(IDOT).dgn	USER NAME = edwardsjd	DESIGNED -	REVISED -
	PLOT SCALE = 10.0000 ' / in.	DRAWN -	REVISED -
	PLOT DATE = Mar-10-2015 02:58:50PM	CHECKED -	REVISED -
Default		DATE -	REVISED -

STATE OF ILLINOIS
DEPARTMENT OF TRANSPORTATION

CROSS SECTIONS IL 94

SCALE: | SHEET OF SHEETS | STA. 1120+25.00 TO STA.1120+25.00

F.A.P. RTE.	SECTION	COUNTY	TOTAL SHEETS	SHEET NO.
685/538	(112)RS-3,L,N,I	HANCOCK	156	89

CONTRACT NO. 72C60

ILLINOIS FED. AID PROJECT

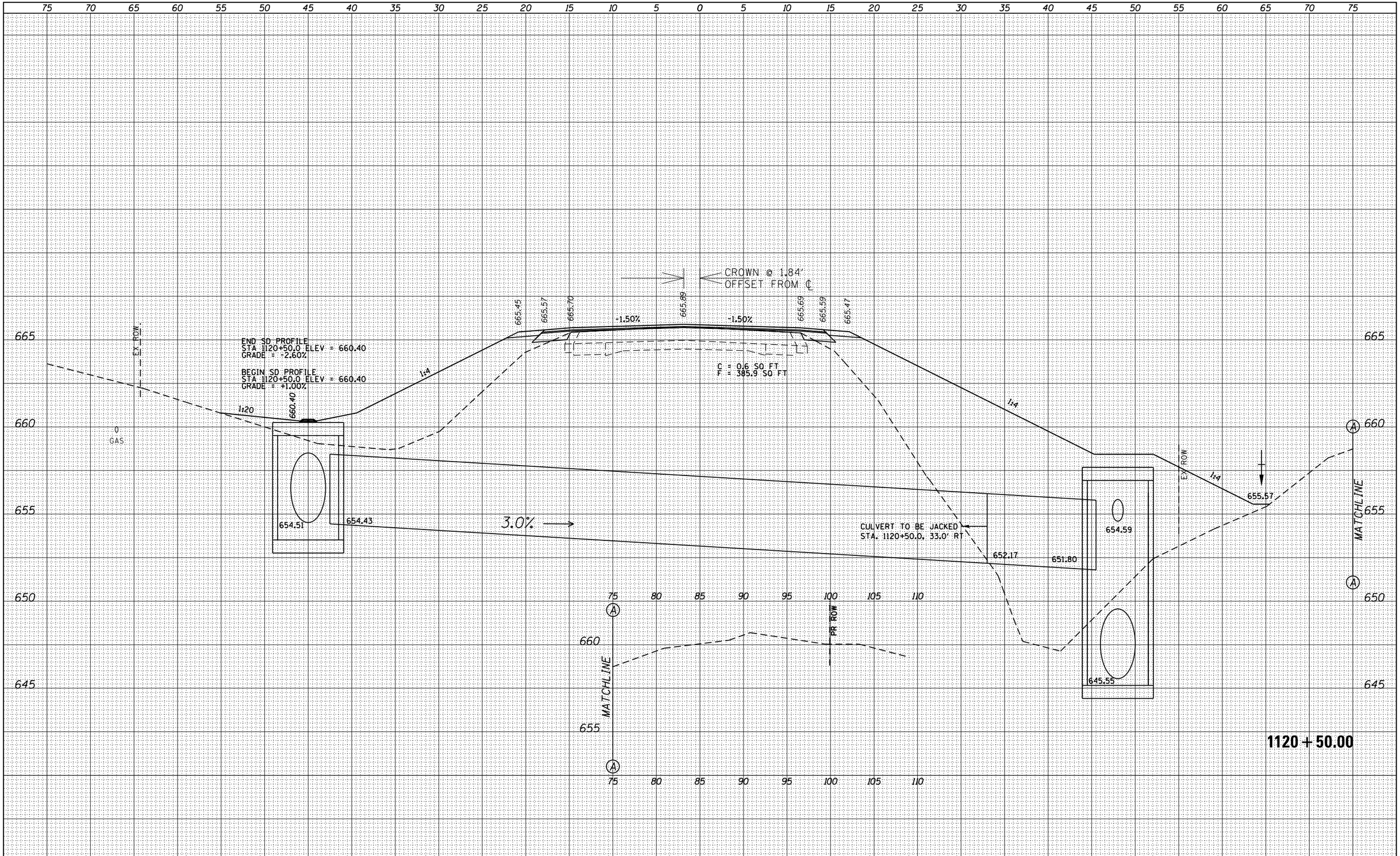

FINAL SURVEY		BY	DATE
NOTE BOOK	SURVEYED		
	PLOTTED		
	TEMPLATE		
	AREAS		
NO.	AREAS CHECKED		

ORIGINAL SURVEY		BY	DATE
NOTE BOOK	SURVEYED		
	PLOTTED		
	TEMPLATE		
	AREAS		
NO.	AREAS CHECKED		

FILE NAME =	USER NAME = edwardsjd	DESIGNED -	REVISED -
c:\pw_work\pwidot\edwardsjd\d0388419\xsc_sht_IL94(IDOT).dgn		DRAWN -	REVISED -
	PLOT SCALE = 10.0000 ' / in.	CHECKED -	REVISED -
Default	PLOT DATE = Mar-10-2015 02:58:51PM	DATE -	REVISED -

STATE OF ILLINOIS
DEPARTMENT OF TRANSPORTATION

CROSS SECTIONS IL 94

SCALE: | SHEET OF SHEETS | STA. 1120+50.00 TO STA. 1120+50.00

F.A.P. RTE.	SECTION	COUNTY	TOTAL SHEETS	SHEET NO.
685/538	(112)RS-3,L,N,I	HANCOCK	156	90

CONTRACT NO. 72C60

ILLINOIS FED. AID PROJECT

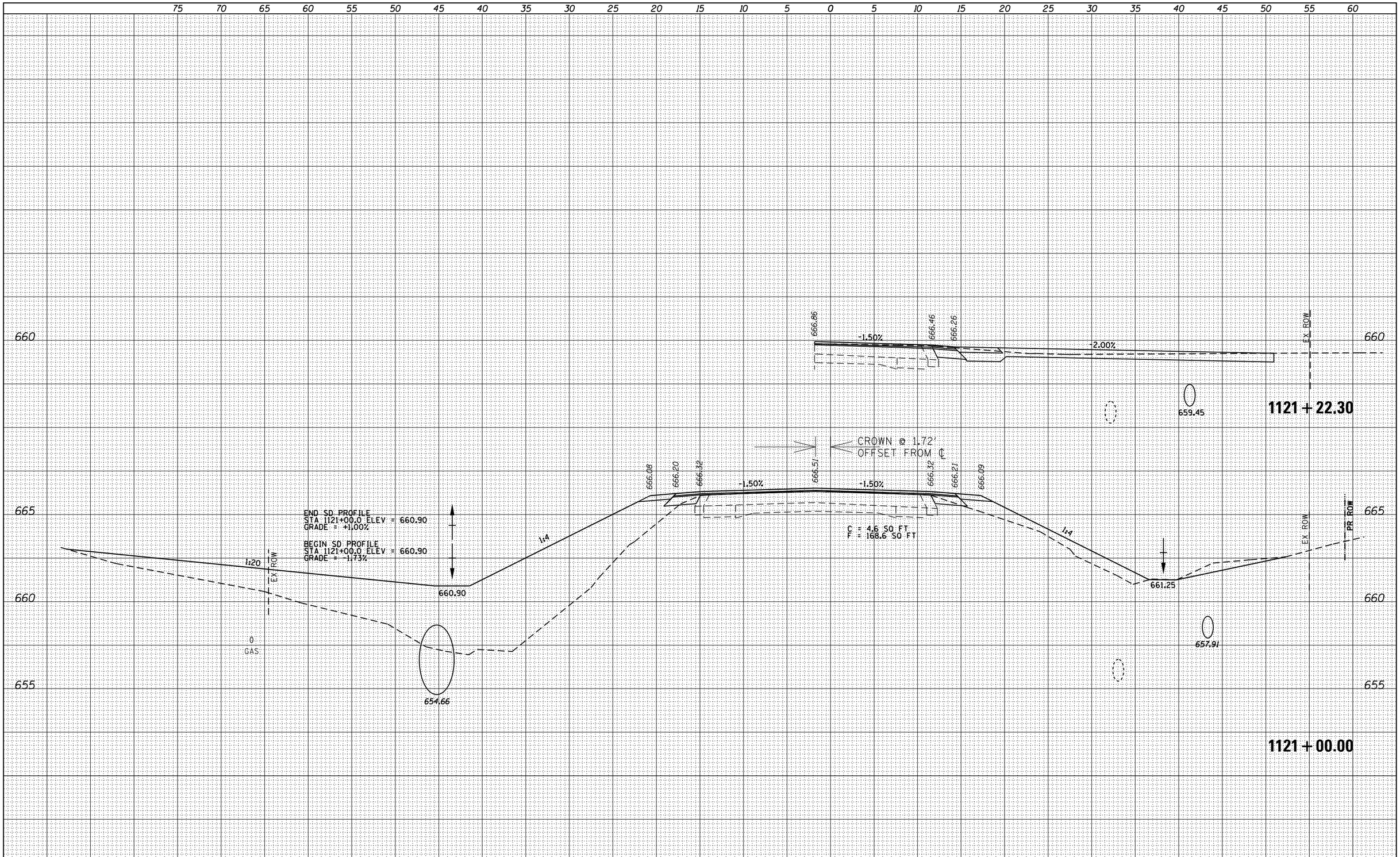

FINAL SURVEY		BY	DATE
NOTE BOOK	SURVEYED		
	PLOTTED		
	TEMPLATE		
	AREAS		
NO.	AREAS CHECKED		

ORIGINAL SURVEY		BY	DATE
NOTE BOOK	SURVEYED		
	PLOTTED		
	TEMPLATE		
	AREAS		
NO.	AREAS CHECKED		

FILE NAME = c:\pw_work\pwidot\edwardsjd\d0388419\xsc_sht_IL94(IDOT).dgn	USER NAME = edwardsjd	DESIGNED -	REVISED -
		DRAWN -	REVISED -
	PLOT SCALE = 10.0000 ' / in.	CHECKED -	REVISED -
Default	PLOT DATE = Mar-10-2015 02:58:52PM	DATE -	REVISED -

STATE OF ILLINOIS
DEPARTMENT OF TRANSPORTATION

CROSS SECTIONS IL 94

SCALE: SHEET OF SHEETS STA. 1121+00.00 TO STA. 1121+22.30

F.A.P. RTE.	SECTION	COUNTY	TOTAL SHEETS	SHEET NO.
685/538	(112)RS-3,L,N,I	HANCOCK	156	91

CONTRACT NO. 72C60

ILLINOIS FED. AID PROJECT

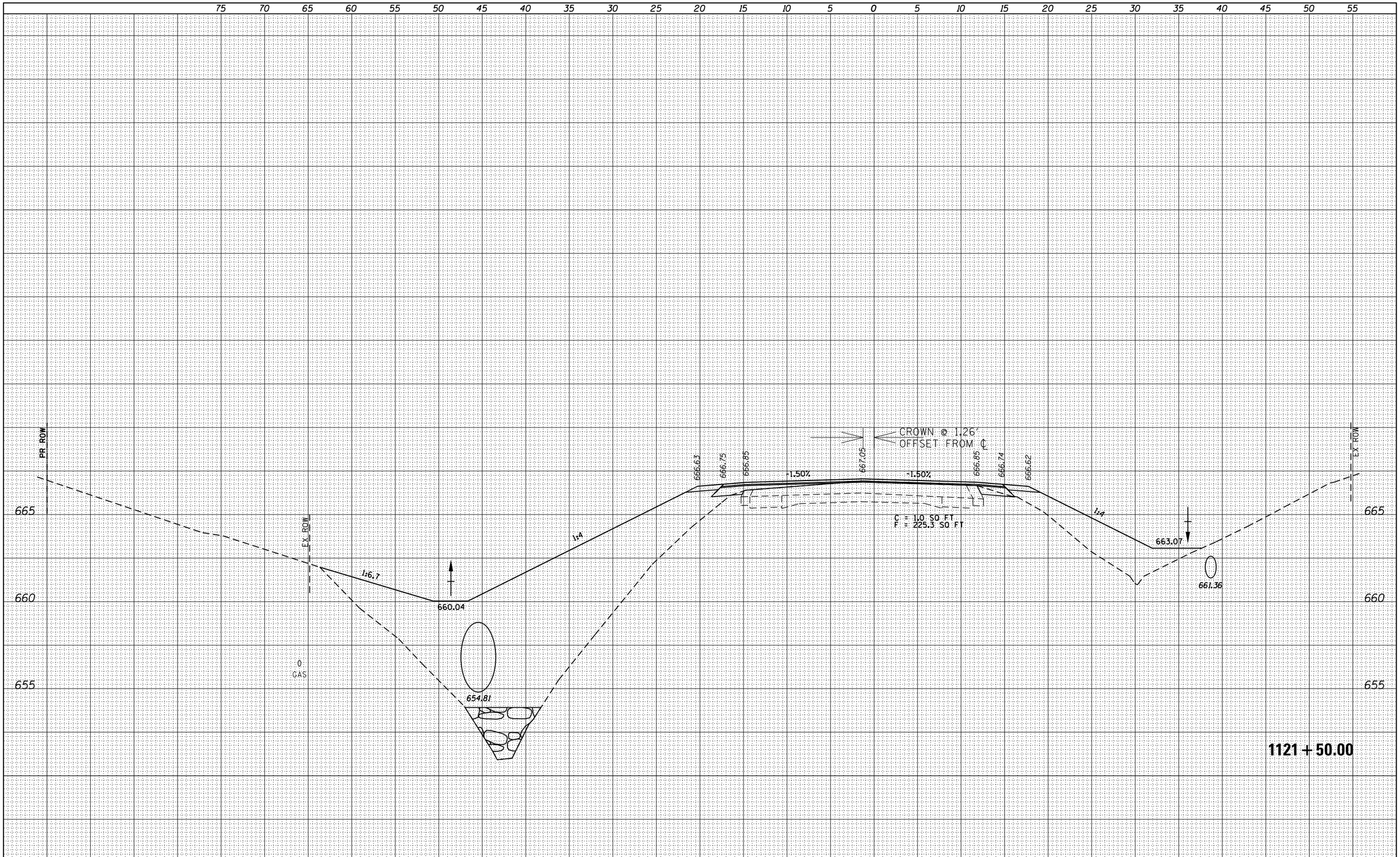

FINAL SURVEY		BY	DATE
NOTE BOOK NO.	SURVEYED		
	PLOTTED		
	TEMPLATE		
	AREAS		
	AREAS CHECKED		

ORIGINAL SURVEY		BY	DATE
NOTE BOOK NO.	SURVEYED		
	PLOTTED		
	TEMPLATE		
	AREAS		
	AREAS CHECKED		

FILE NAME = c:\pw_work\pwidot\edwardsjd\d0388419\xsc_sht_IL94(IDOT).dgn	USER NAME = edwardsjd	DESIGNED -	REVISED -
		DRAWN -	REVISED -
	PLOT SCALE = 10.0000 ' / in.	CHECKED -	REVISED -
Default	PLOT DATE = Mar-10-2015 02:59:04PM	DATE -	REVISED -

STATE OF ILLINOIS
DEPARTMENT OF TRANSPORTATION

CROSS SECTIONS IL 94

SCALE: SHEET OF SHEETS STA. 1121+50.00 TO STA. 1121+50.00

F.A.P. RTE.	SECTION	COUNTY	TOTAL SHEETS	SHEET NO.
685/538	(112)RS-3,L,N,I	HANCOCK	156	92

CONTRACT NO. 72C60

ILLINOIS FED. AID PROJECT

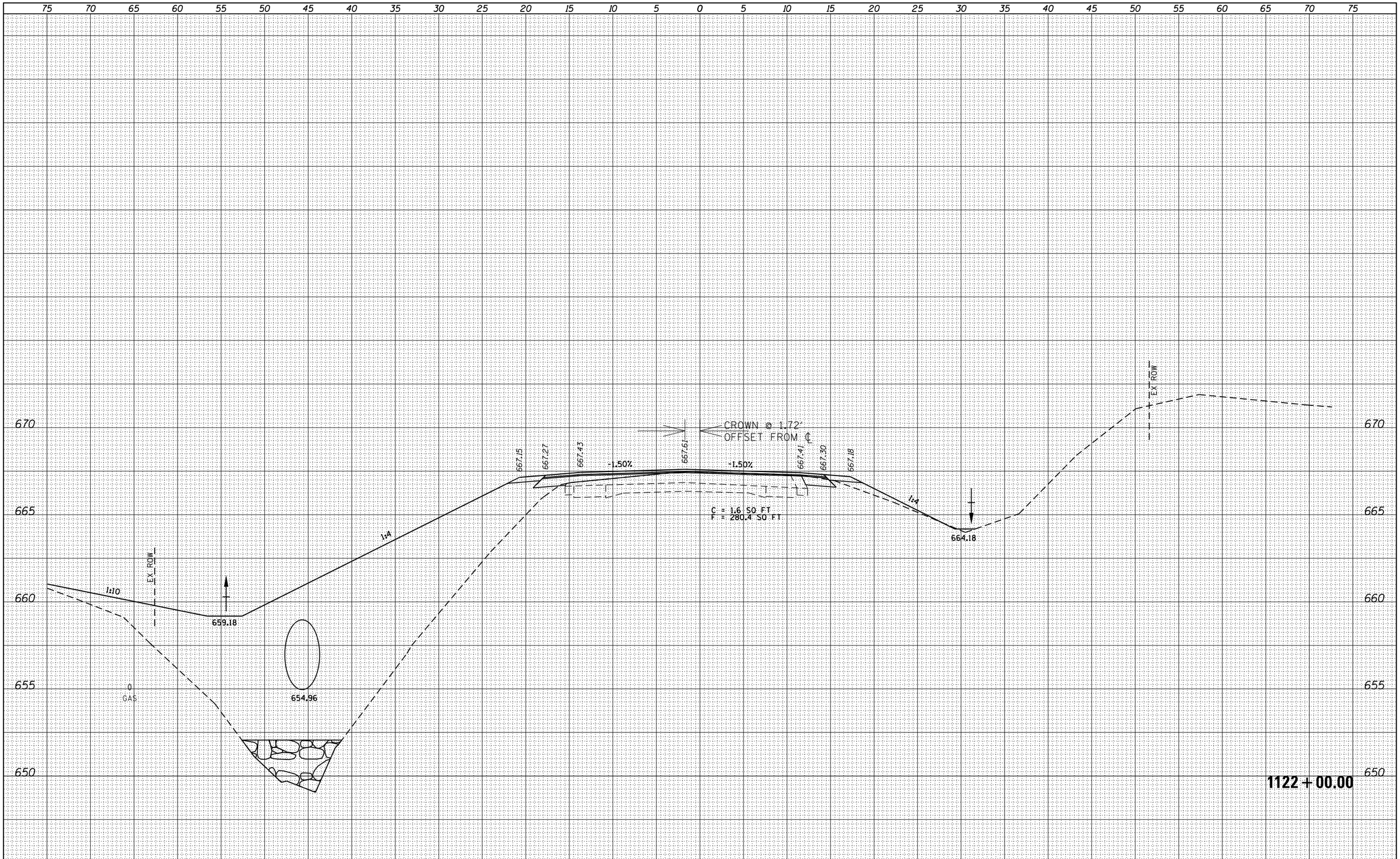

FINAL SURVEY		BY	DATE
NOTE BOOK	SURVEYED		
	PLOTTED		
	TEMPLATE		
	AREAS		
NO.	AREAS CHECKED		

ORIGINAL SURVEY		BY	DATE
NOTE BOOK	SURVEYED		
	PLOTTED		
	TEMPLATE		
	AREAS		
NO.	AREAS CHECKED		

FILE NAME = c:\pw_work\pwidot\edwardsjd\d0388419\xsc_sht_IL94(IDOT).dgn	USER NAME = edwardsjd	DESIGNED -	REVISED -
		DRAWN -	REVISED -
	PLOT SCALE = 10.0000 ' / in.	CHECKED -	REVISED -
Default	PLOT DATE = Mar-10-2015 02:59:05PM	DATE -	REVISED -

STATE OF ILLINOIS
DEPARTMENT OF TRANSPORTATION

CROSS SECTIONS IL 94

SCALE: | SHEET OF SHEETS | STA. 1122+00.00 TO STA. 1122+00.00

F.A.P. RTE.	SECTION	COUNTY	TOTAL SHEETS	SHEET NO.
685/538	(112)RS-3,L,N,I	HANCOCK	156	93

CONTRACT NO. 72C60

ILLINOIS FED. AID PROJECT

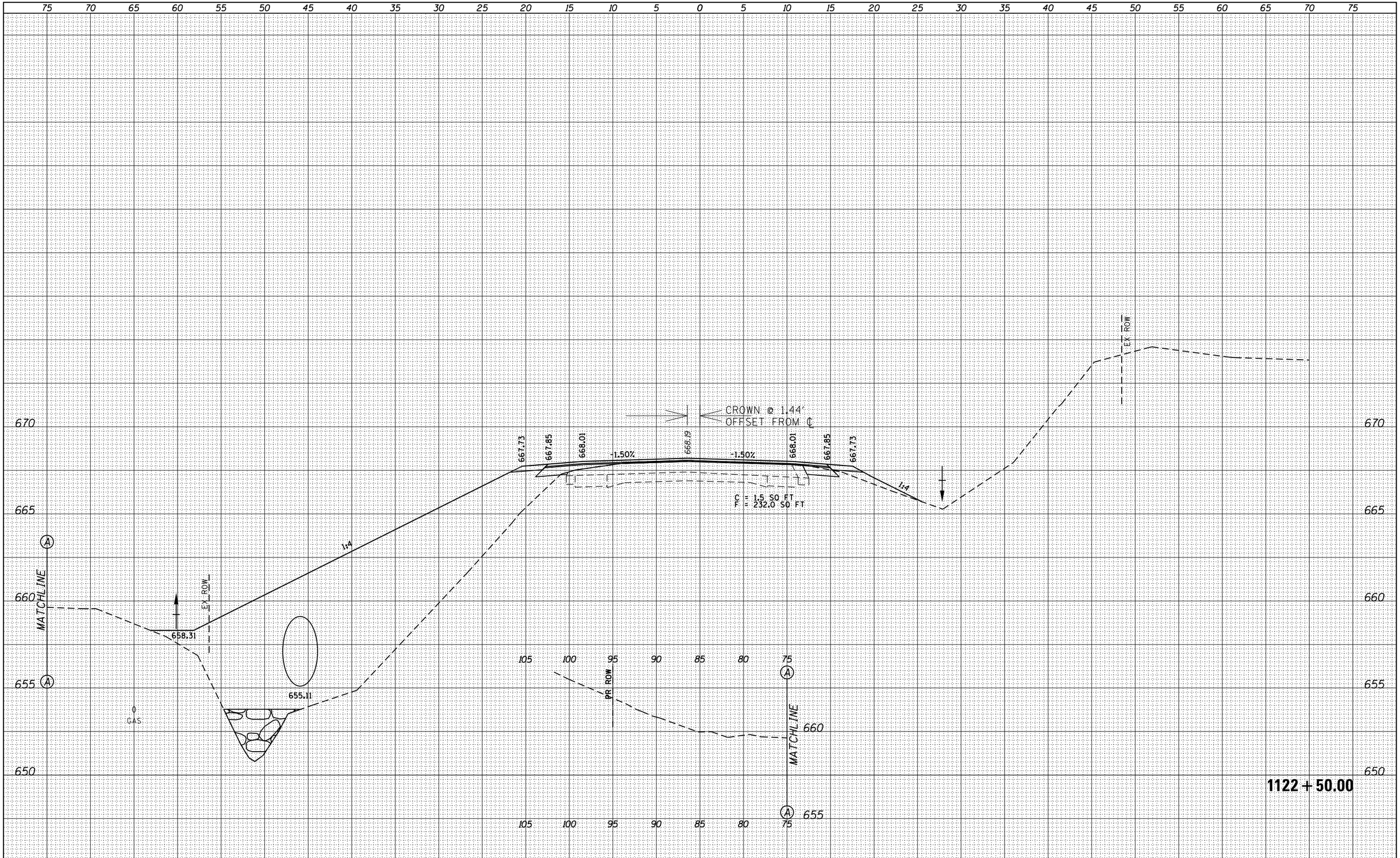

FINAL SURVEY		BY	DATE
NOTE BOOK	SURVEYED		
	PLOTTED		
	TEMPLATE		
	AREAS		
NO.	AREAS CHECKED		

ORIGINAL SURVEY		BY	DATE
NOTE BOOK	SURVEYED		
	PLOTTED		
	TEMPLATE		
	AREAS		
NO.	AREAS CHECKED		

FILE NAME = c:\pw_work\pwidot\edwardsjd\d0388419\xsc_sht_IL94(IDOT).dgn	USER NAME = edwardsjd	DESIGNED -	REVISED -
		DRAWN -	REVISED -
	PLOT SCALE = 10.0000 ' / in.	CHECKED -	REVISED -
Default	PLOT DATE = Mar-10-2015 02:59:05PM	DATE -	REVISED -

STATE OF ILLINOIS
DEPARTMENT OF TRANSPORTATION

CROSS SECTIONS IL 94

SCALE: | SHEET OF SHEETS | STA. 1122+50.00 TO STA. 1122+50.00

F.A.P. RTE.	SECTION	COUNTY	TOTAL SHEETS	SHEET NO.
685/538	(112)RS-3,L,N,I	HANCOCK	156	94
		CONTRACT NO. 72C60		
	ILLINOIS	FED. AID PROJECT		

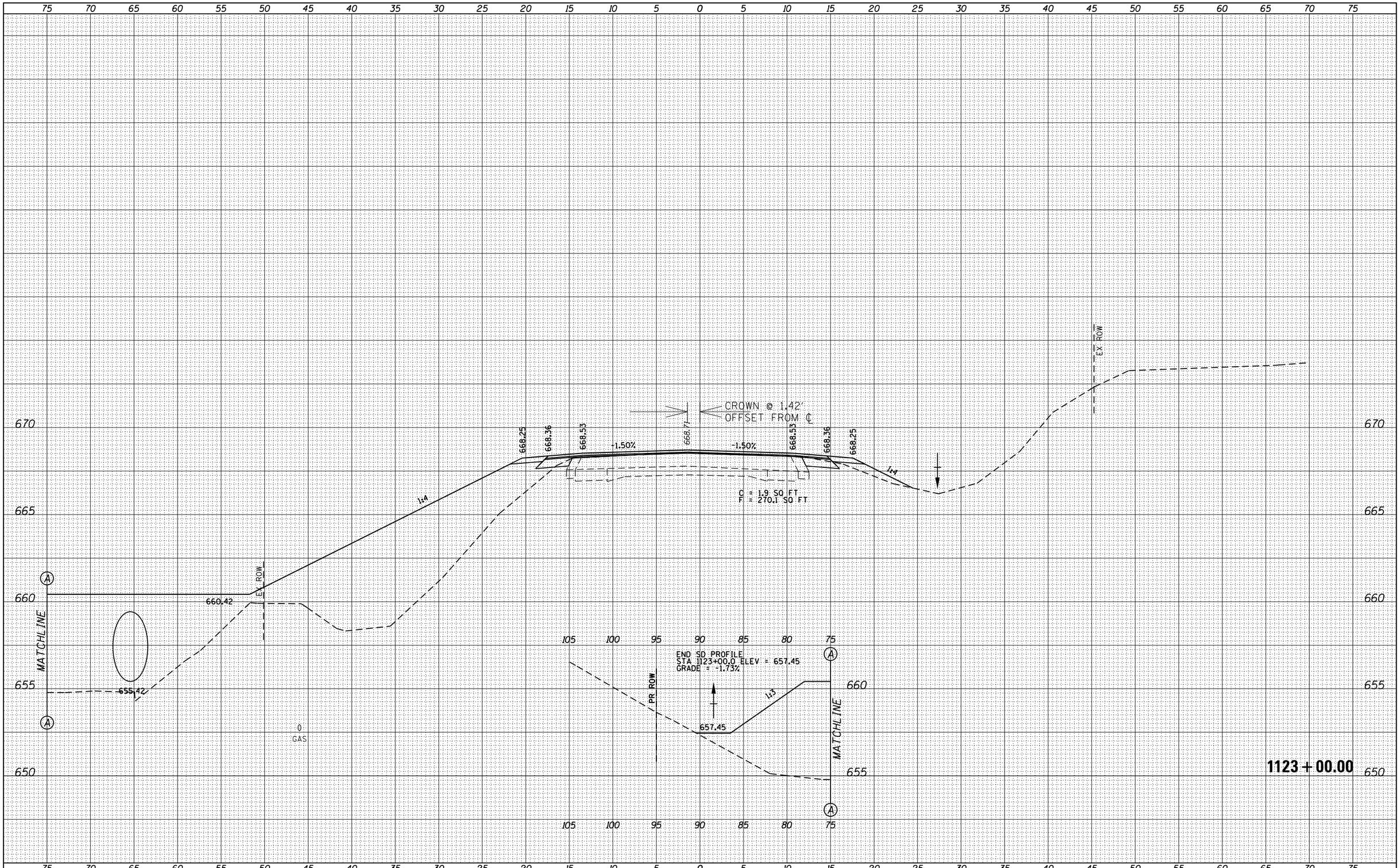

FINAL SURVEY		BY	DATE
NOTE BOOK	SURVEYED		
	PLOTTED		
	TEMPLATE		
	AREAS		
NO.	AREAS CHECKED		

ORIGINAL SURVEY		BY	DATE
NOTE BOOK	SURVEYED		
	PLOTTED		
	TEMPLATE		
	AREAS		
NO.	AREAS CHECKED		

FILE NAME = c:\pw_work\pwidot\edwardsjd\d0388419\xsc_sht_IL94(IDOT).dgn	USER NAME = edwardsjd	DESIGNED -	REVISED -
		DRAWN -	REVISED -
	PLOT SCALE = 10.0000 ' / in.	CHECKED -	REVISED -
Default	PLOT DATE = Mar-10-2015 02:59:06PM	DATE -	REVISED -

STATE OF ILLINOIS
DEPARTMENT OF TRANSPORTATION

CROSS SECTIONS IL 94

SCALE: | SHEET OF SHEETS | STA. 1123+00.00 TO STA.1123+00.00

F.A.P. RTE.	SECTION	COUNTY	TOTAL SHEETS	SHEET NO.
685/538	(112)RS-3,L,N,I	HANCOCK	156	95

CONTRACT NO. 72C60

ILLINOIS FED. AID PROJECT

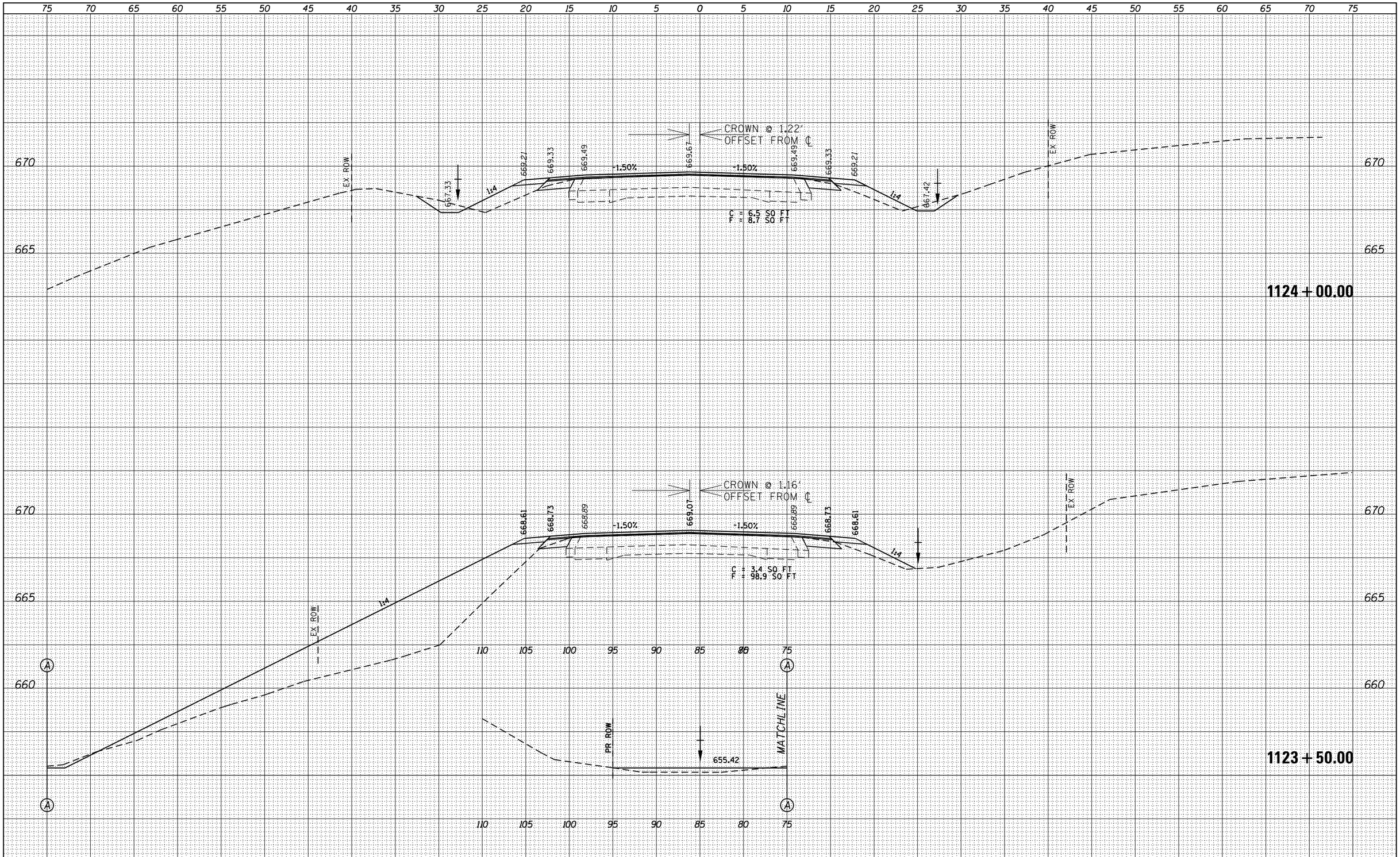

FINAL SURVEY		BY	DATE
NOTE BOOK	SURVEYED		
	PLOTTED		
	TEMPLATE		
	AREAS		
NO.	AREAS CHECKED		

ORIGINAL SURVEY		BY	DATE
NOTE BOOK	SURVEYED		
	PLOTTED		
	TEMPLATE		
	AREAS		
NO.	AREAS CHECKED		

FILE NAME = c:\pw_work\pwidot\edwardsjd\d0388419\xsc_sht_IL94(IDOT).dgn	USER NAME = edwardsjd	DESIGNED -	REVISED -
		DRAWN -	REVISED -
	PLOT SCALE = 10.0000 ' / in.	CHECKED -	REVISED -
Default	PLOT DATE = Mar-10-2015 02:59:07PM	DATE -	REVISED -

STATE OF ILLINOIS
DEPARTMENT OF TRANSPORTATION

CROSS SECTIONS IL 94

SCALE: | SHEET OF SHEETS | STA. 1123+50.00 TO STA. 1124+00.00

F.A.P. RTE.	SECTION	COUNTY	TOTAL SHEETS	SHEET NO.
685/538	(112)RS-3,L,N,I	HANCOCK	156	96
		CONTRACT NO. 72C60		
		ILLINOIS FED. AID PROJECT		

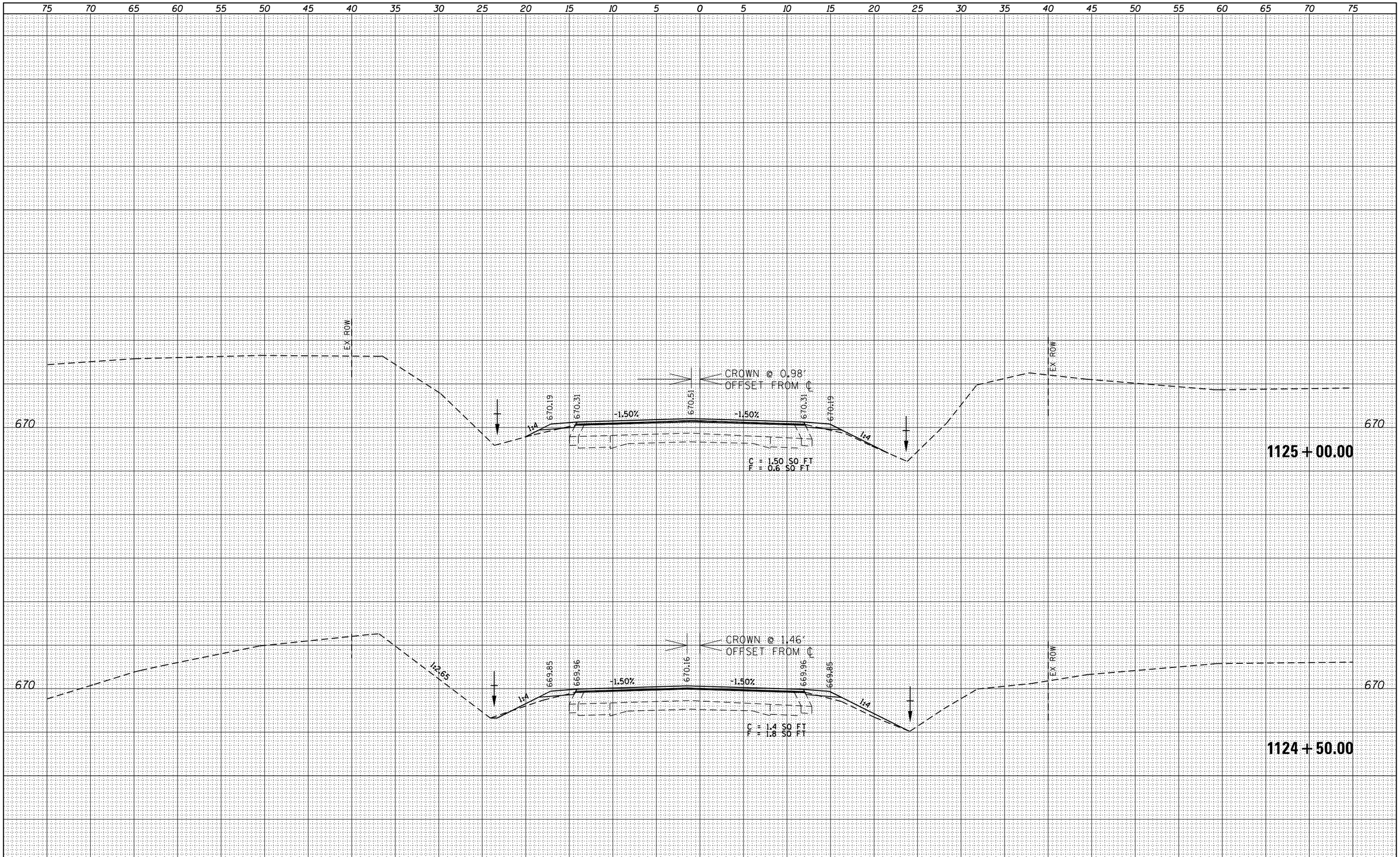

FINAL SURVEY		BY	DATE
NOTE BOOK	SURVEYED		
	PLOTTED		
	TEMPLATE		
	AREAS		
NO.	AREAS CHECKED		

ORIGINAL SURVEY		BY	DATE
NOTE BOOK	SURVEYED		
	PLOTTED		
	TEMPLATE		
	AREAS		
NO.	AREAS CHECKED		

FILE NAME = pw:\\IL084EBIDINTEG.illinois.gov:PWIDOT\Documents\IDOT Offices\District 6\Projects\D672C60\CADD\DRAWING\District edit\CADD Sheets\xs1124(IBOT).dgn	USER NAME = sparksgw	DESIGNED -	REVISED -
		DRAWN -	REVISED -
	PLOT SCALE = 10.0000 ' / in.	CHECKED -	REVISED -
Default	PLOT DATE = 10/23/2014	DATE -	REVISED -

STATE OF ILLINOIS
DEPARTMENT OF TRANSPORTATION

CROSS SECTIONS IL 94

SCALE: | SHEET OF SHEETS | STA. 1124+50.00 TO STA. 1125+00.00

F.A.P. RTE.	SECTION	COUNTY	TOTAL SHEETS	SHEET NO.
685/538	(112)RS-3,L,N,I	HANCOCK	156	97

CONTRACT NO. 72C60

ILLINOIS FED. AID PROJECT

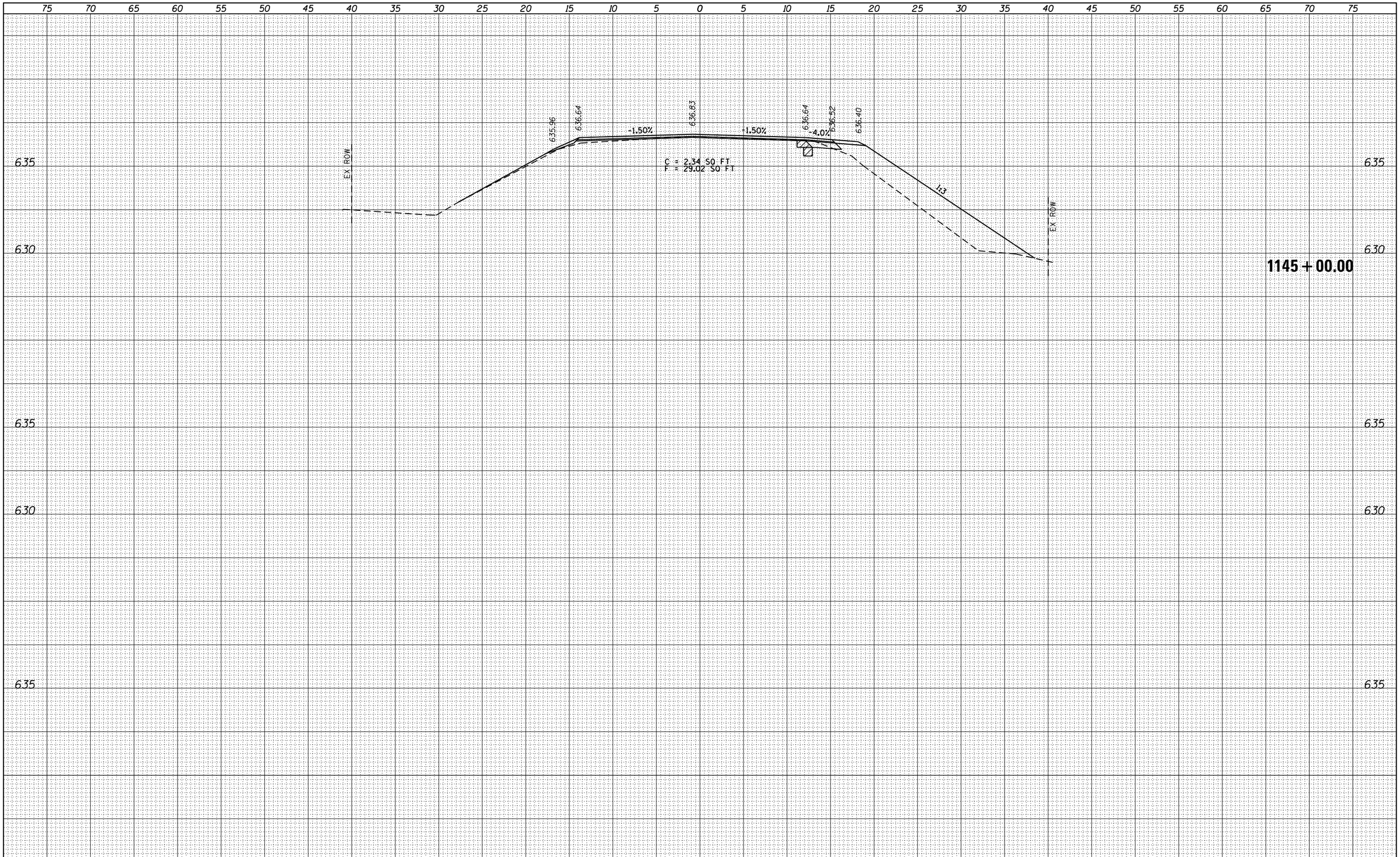

FINAL SURVEY		BY	DATE
NOTE BOOK NO.	SURVEYED		
	PLOTTED		
	TEMPLATE		
	AREAS		
	AREAS CHECKED		

ORIGINAL SURVEY		BY	DATE
NOTE BOOK NO.	SURVEYED		
	PLOTTED		
	TEMPLATE		
	AREAS		
	AREAS CHECKED		

FILE NAME = c:\pw_work\pwidot\edwardsjd\d0388419\D672C60-sht-xsht_IL 94 SN034-0070.dgn	USER NAME = edwardsjd	DESIGNED -	REVISED -
		DRAWN -	REVISED -
	PLOT SCALE = 10.0000 ' / in.	CHECKED -	REVISED -
Default	PLOT DATE = Mar-10-2015 02:59:10PM	DATE -	REVISED -

STATE OF ILLINOIS
DEPARTMENT OF TRANSPORTATION

CROSS SECTIONS IL 94
S.N. 034-0070

SCALE: | SHEET OF SHEETS | STA. 1144+00.00 TO STA. 1145+00.00

F.A.P. RTE.	SECTION	COUNTY	TOTAL SHEETS	SHEET NO.
*	(112)RS-3,L,N,I	HANCOCK	156	97A

CONTRACT NO. 72C60

ILLINOIS FED. AID PROJECT

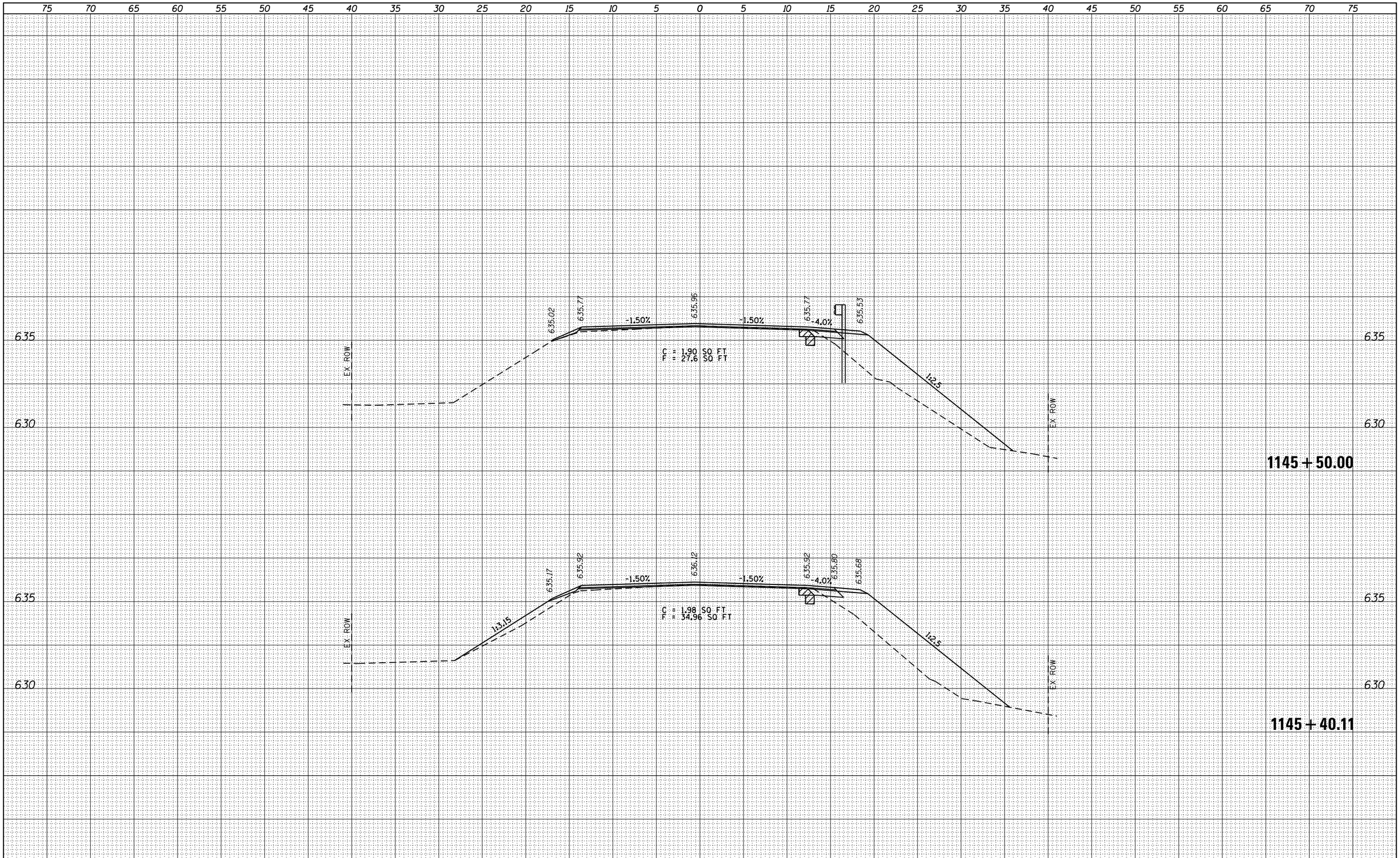

FINAL SURVEY		BY	DATE
NOTE BOOK	SURVEYED		
	PLOTTED		
	TEMPLATE		
	AREAS		
NO.	AREAS CHECKED		

ORIGINAL SURVEY		BY	DATE
NOTE BOOK	SURVEYED		
	PLOTTED		
	TEMPLATE		
	AREAS		
NO.	AREAS CHECKED		

FILE NAME = c:\pw_work\pwidot\edwardsjd\d0388419\D672C60-sht-xsht_IL 94 SN034-0070.dgn	USER NAME = edwardsjd	DESIGNED -	REVISED -
		DRAWN -	REVISED -
	PLOT SCALE = 10.0000 ' / in.	CHECKED -	REVISED -
Default	PLOT DATE = Mar-10-2015 02:59:10PM	DATE -	REVISED -

STATE OF ILLINOIS
DEPARTMENT OF TRANSPORTATION

CROSS SECTIONS IL 94
S.N. 034-0070

SCALE: | SHEET OF SHEETS | STA. 1145+40.11 TO STA. 1145+50.00

F.A.P. RTE.	SECTION	COUNTY	TOTAL SHEETS	SHEET NO.
•	(112)RS-3,L,N,1	HANCOCK	156	97B
		CONTRACT NO. 72C60		
		ILLINOIS FED. AID PROJECT		

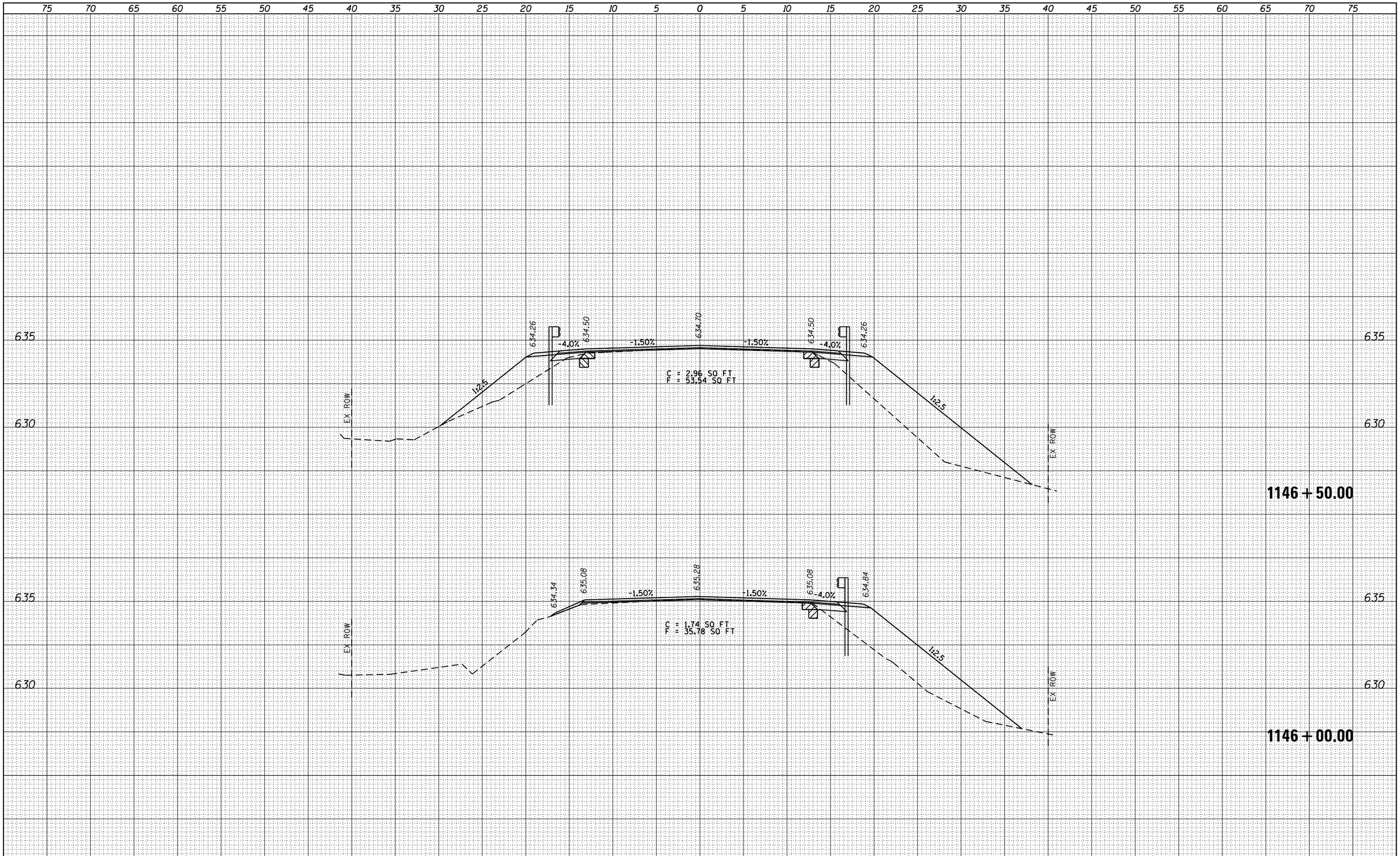

FINAL SURVEY		BY	DATE
NOTE BOOK	SURVEYED		
	PLOTTED		
	TEMPLATE		
	AREAS		
NO.	AREAS CHECKED		

ORIGINAL SURVEY		BY	DATE
NOTE BOOK	SURVEYED		
	PLOTTED		
	TEMPLATE		
	AREAS		
NO.	AREAS CHECKED		

FILE NAME = c:\pw_work\pwidot\edwardsjd\d0388419\D672C60-sht-xxsht_IL 94 SN034-0070.dgn	USER NAME = edwardsjd	DESIGNED -	REVISED -
		DRAWN -	REVISED -
	PLOT SCALE = 10.0000 ' / in.	CHECKED -	REVISED -
Default	PLOT DATE = Mar-10-2015 02:59:11PM	DATE -	REVISED -

STATE OF ILLINOIS
DEPARTMENT OF TRANSPORTATION

CROSS SECTIONS IL 94
S.N. 034-0070

SCALE: | SHEET OF SHEETS | STA. 1146+00.00 TO STA. 1146+50.00

F.A.P. RTE.	SECTION	COUNTY	TOTAL SHEETS	SHEET NO.
•	(112)RS-3,L,N,I	HANCOCK	156	97C
		CONTRACT NO. 72C60		
		ILLINOIS FED. AID PROJECT		

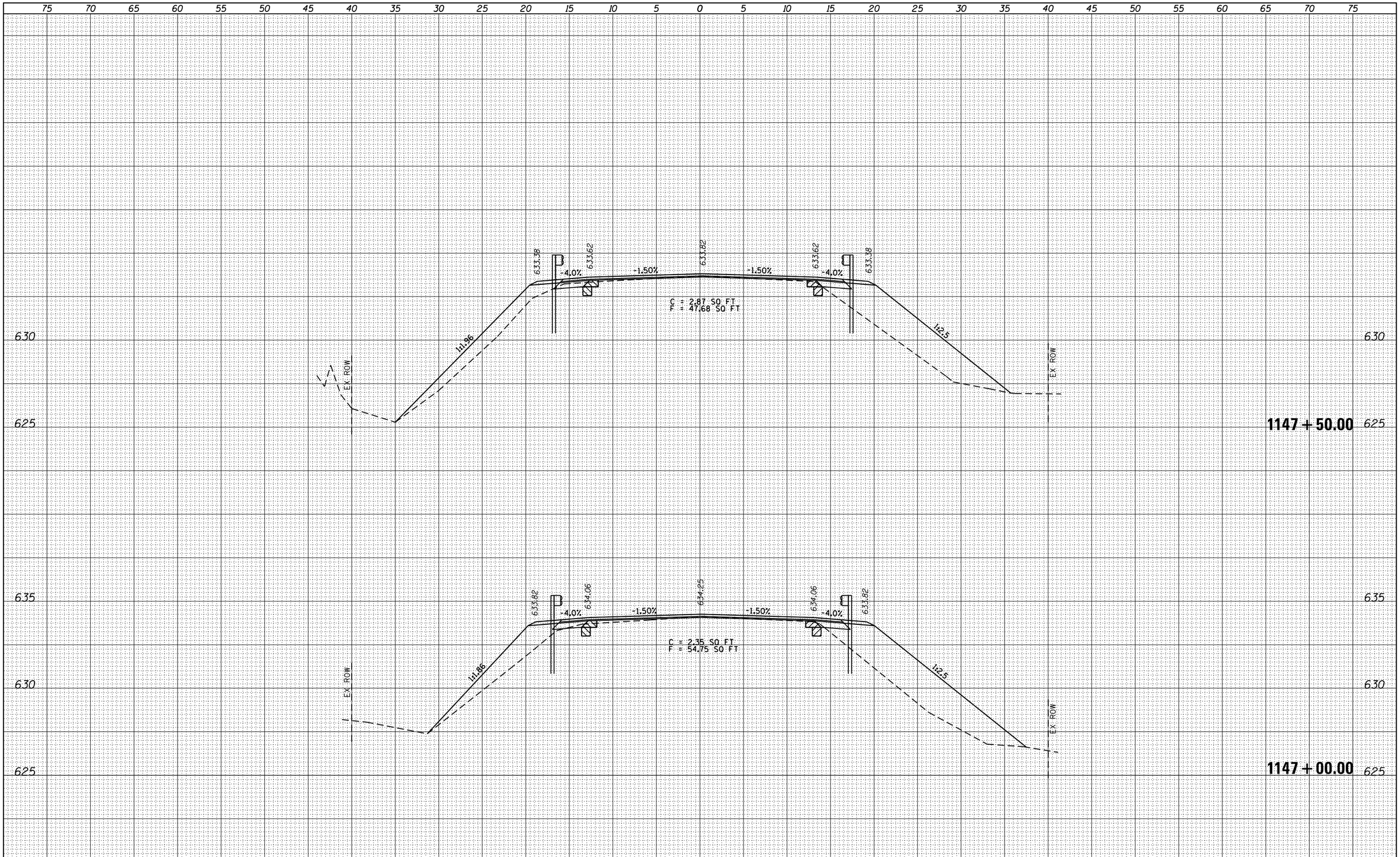

FINAL SURVEY		BY	DATE
NOTE BOOK	SURVEYED		
	PLOTTED		
	TEMPLATE		
	AREAS		
	AREAS CHECKED		
NO.			

ORIGINAL SURVEY		BY	DATE
NOTE BOOK	SURVEYED		
	PLOTTED		
	TEMPLATE		
	AREAS		
	AREAS CHECKED		
NO.			

FILE NAME = c:\pw_work\pwidot\edwardsjd\d0388419\D672C60-sht-xsht_IL 94 SN034-0070.dgn	USER NAME = edwardsjd	DESIGNED -	REVISED -
		DRAWN -	REVISED -
	PLOT SCALE = 10.0000 ' / in.	CHECKED -	REVISED -
Default	PLOT DATE = Mar-10-2015 02:59:11PM	DATE -	REVISED -

STATE OF ILLINOIS
DEPARTMENT OF TRANSPORTATION

CROSS SECTIONS IL 94
S.N. 034-0070

SCALE: | SHEET OF SHEETS | STA. 1147+00.00 TO STA. 1147+50.00

F.A.P. RTE.	SECTION	COUNTY	TOTAL SHEETS	SHEET NO.
*	(112)RS-3,L,N,I	HANCOCK	156	97D
		CONTRACT NO. 72C60		
		ILLINOIS FED. AID PROJECT		

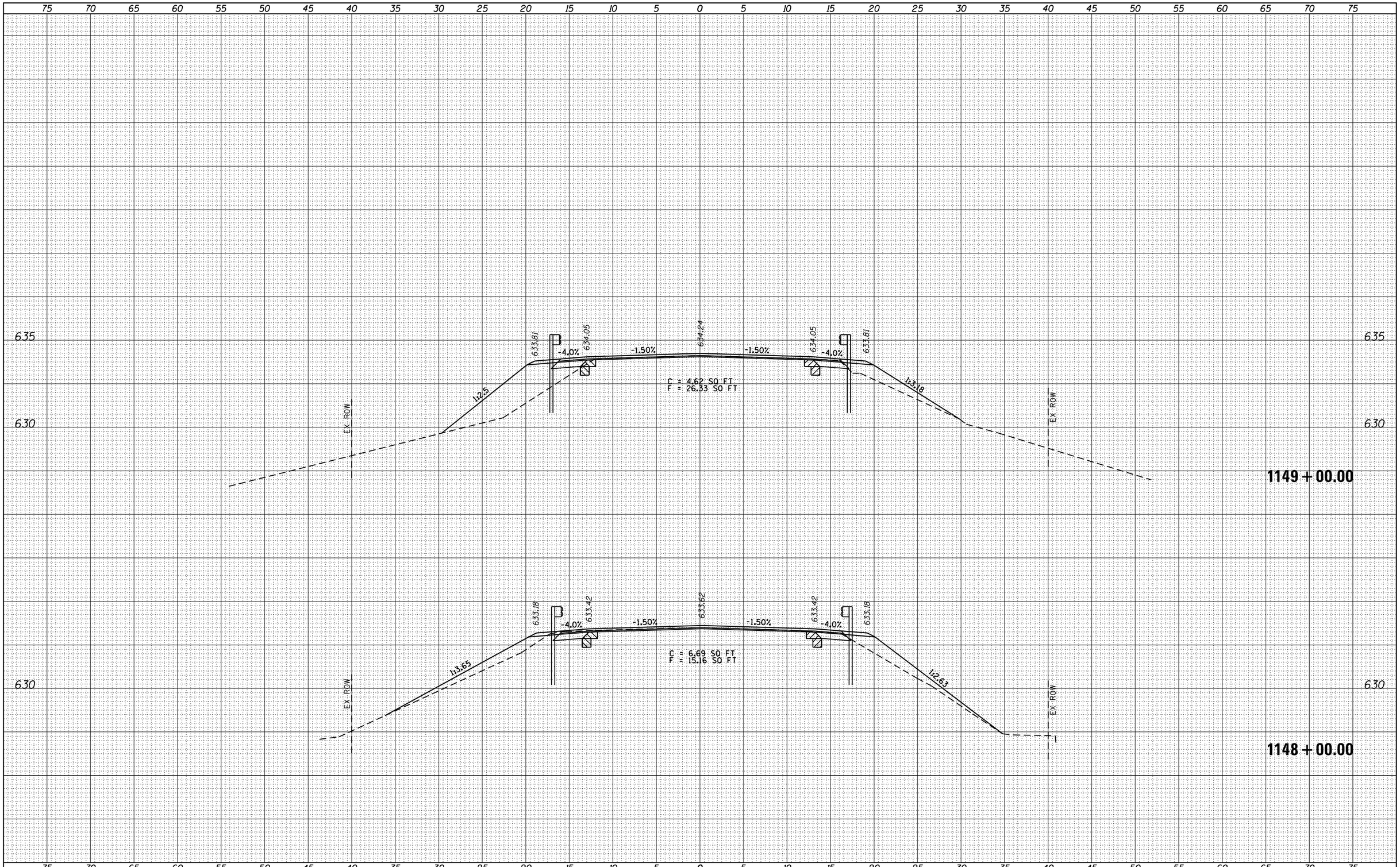

FINAL SURVEY		BY	DATE
NOTE BOOK	SURVEYED		
	PLOTTED		
	TEMPLATE		
	AREAS		
NO.	AREAS CHECKED		

ORIGINAL SURVEY		BY	DATE
NOTE BOOK	SURVEYED		
	PLOTTED		
	TEMPLATE		
	AREAS		
NO.	AREAS CHECKED		

FILE NAME =	USER NAME = edwardsjd	DESIGNED -	REVISED -
c:\pw_work\pwidot\edwardsjd\d0388419\D672C60-sht-xsht_IL 94 SN034-0070.dgn		DRAWN -	REVISED -
	PLOT SCALE = 10.0000 ' / in.	CHECKED -	REVISED -
Default	PLOT DATE = Mar-10-2015 02:59:11PM	DATE -	REVISED -

STATE OF ILLINOIS
DEPARTMENT OF TRANSPORTATION

CROSS SECTIONS IL 94
S.N. 034-0070

SCALE: | SHEET OF SHEETS | STA. 1148+00.00 TO STA. 1149+00.00

F.A.P. RTE.	SECTION	COUNTY	TOTAL SHEETS	SHEET NO.
•	(112)RS-3,L,N,I	HANCOCK	156	97E
		CONTRACT NO. 72C60		
		ILLINOIS FED. AID PROJECT		

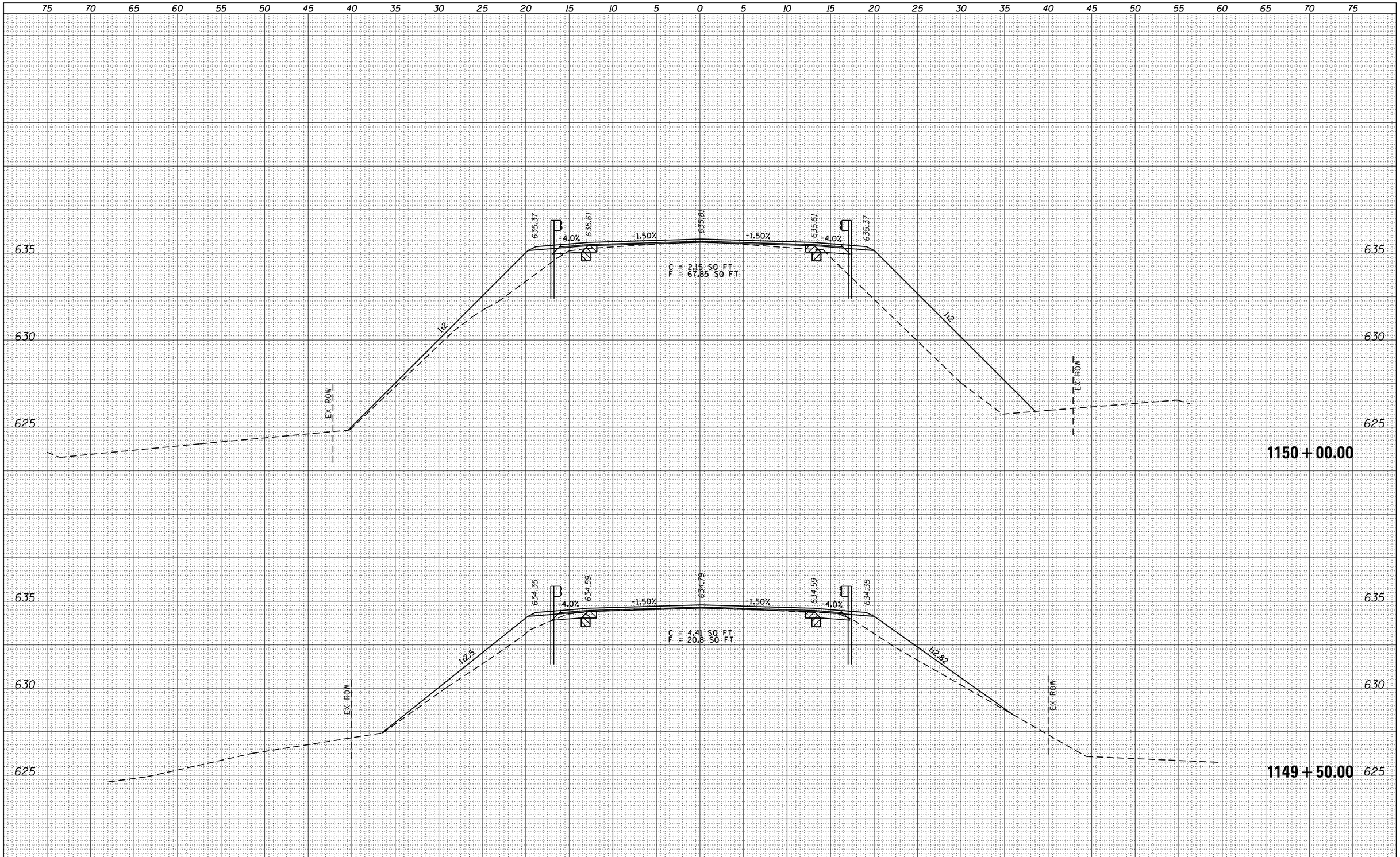

FINAL SURVEY	BY	DATE
SURVEYED		
PLOTTED		
TEMPLATE		
AREAS		
AREAS CHECKED		
NOTE BOOK NO.		

ORIGINAL SURVEY	BY	DATE
SURVEYED		
PLOTTED		
TEMPLATE		
AREAS		
AREAS CHECKED		
NOTE BOOK NO.		

FILE NAME = c:\pw_work\pwidot\edwardsjd\d0388419\D672C60-sht-xsht_IL 94 SN034-0070.dgn	USER NAME = edwardsjd	DESIGNED -	REVISED -
	PLOT SCALE = 10.0000 ' / in.	DRAWN -	REVISED -
	PLOT DATE = Mar-10-2015 02:59:12PM	CHECKED -	REVISED -
Default		DATE -	REVISED -

STATE OF ILLINOIS
DEPARTMENT OF TRANSPORTATION

CROSS SECTIONS IL 94
S.N. 034-0070

SCALE: | SHEET OF SHEETS | STA. 1149+50.00 TO STA. 1150+00.00

F.A.P. RTE.	SECTION	COUNTY	TOTAL SHEETS	SHEET NO.
*	(112)RS-3,L,N,I	HANCOCK	156	97F
		CONTRACT NO. 72C60		
		ILLINOIS FED. AID PROJECT		

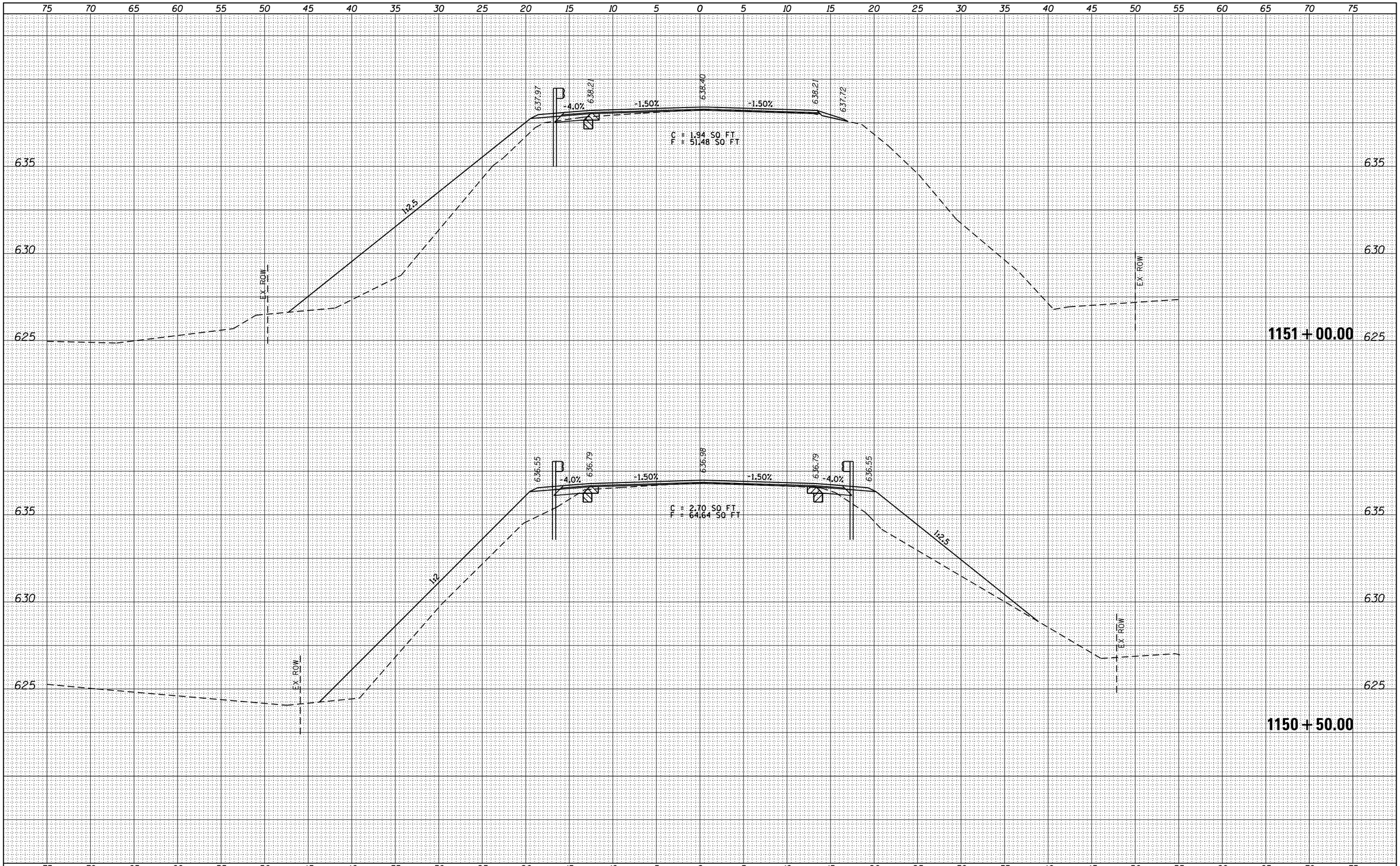

FINAL SURVEY		BY	DATE
NOTE BOOK	SURVEYED		
	PLOTTED		
	TEMPLATE		
	AREAS		
NO.	AREAS CHECKED		

ORIGINAL SURVEY		BY	DATE
NOTE BOOK	SURVEYED		
	PLOTTED		
	TEMPLATE		
	AREAS		
NO.	AREAS CHECKED		

FILE NAME =	USER NAME = edwardsjd	DESIGNED -	REVISED -
c:\pw_work\pwidot\edwardsjd\d0388419\D672C60-sht-xsht_IL 94 SN034-0070.dgn		DRAWN -	REVISED -
	PLOT SCALE = 10.0000 ' / in.	CHECKED -	REVISED -
Default	PLOT DATE = Mar-10-2015 02:59:12PM	DATE -	REVISED -

STATE OF ILLINOIS
DEPARTMENT OF TRANSPORTATION

CROSS SECTIONS IL 94
S.N. 034-0070

SCALE: | SHEET OF SHEETS | STA. 1150+50.00 TO STA. 1151+00.00

F.A.P. RTE.	SECTION	COUNTY	TOTAL SHEETS	SHEET NO.
•	(112)RS-3,L,N,I	HANCOCK	156	97G
		CONTRACT NO. 72C60		
		ILLINOIS FED. AID PROJECT		

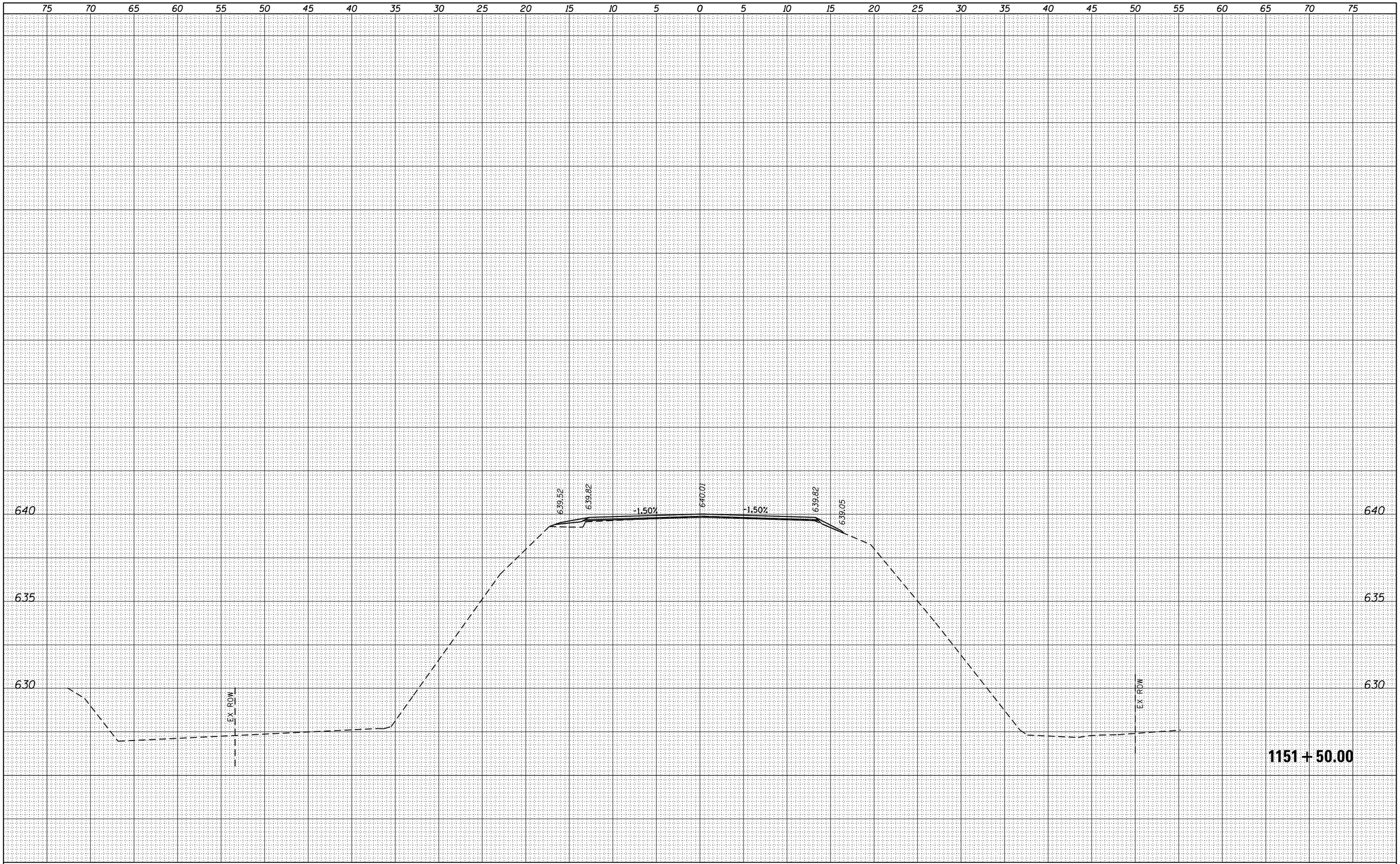

FINAL SURVEY		BY	DATE
NOTE BOOK NO.	SURVEYED		
	PLOTTED		
	TEMPLATE		
	AREAS		
	AREAS CHECKED		

ORIGINAL SURVEY		BY	DATE
NOTE BOOK NO.	SURVEYED		
	PLOTTED		
	TEMPLATE		
	AREAS		
	AREAS CHECKED		

FILE NAME = c:\pw_work\pwidot\edwardsjd\d0388419\D672C60-sht-xsht_IL 94 SN034-0070.dgn	USER NAME = edwardsjd	DESIGNED -	REVISED -
		DRAWN -	REVISED -
	PLOT SCALE = 10.0000 ' / in.	CHECKED -	REVISED -
Default	PLOT DATE = Mar-10-2015 02:59:12PM	DATE -	REVISED -

STATE OF ILLINOIS
DEPARTMENT OF TRANSPORTATION

CROSS SECTIONS IL 94
S.N. 034-0070

SCALE: | SHEET OF SHEETS | STA. 1151+50.00 TO STA. 1151+50.00

F.A.P. RTE.	SECTION	COUNTY	TOTAL SHEETS	SHEET NO.
*	(112)RS-3,L,N,I	HANCOCK	156	97H
		CONTRACT NO. 72C60		
		ILLINOIS FED. AID PROJECT		

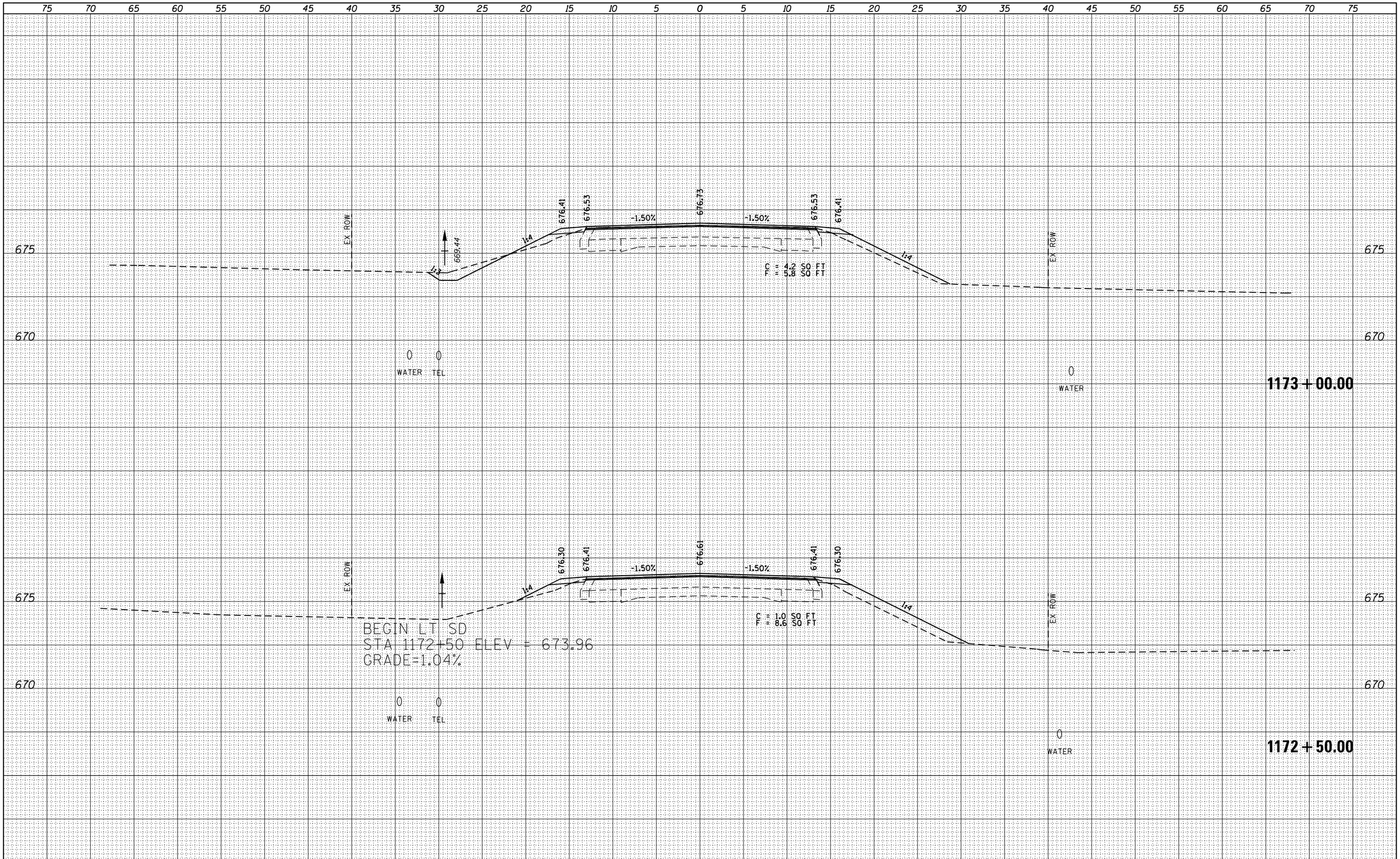

FINAL SURVEY		BY	DATE
NOTE BOOK	SURVEYED		
	PLOTTED		
	TEMPLATE		
	AREAS		
NO.	AREAS CHECKED		

ORIGINAL SURVEY		BY	DATE
NOTE BOOK	SURVEYED		
	PLOTTED		
	TEMPLATE		
	AREAS		
NO.	AREAS CHECKED		

FILE NAME = pw:\\IL084EBIDINTEG.illinois.gov:PWIDOT\Documents\IDOT Offices\District 6\Projects\D672C60\CADD\ENGINEER\District edit\CADD Sheets\xs94(IDOT).dgn	USER NAME = sparksgw	DESIGNED -	REVISED -
	PLOT SCALE = 10.0000 ' / in.	CHECKED -	REVISED -
Default	PLOT DATE = 10/23/2014	DATE -	REVISED -

STATE OF ILLINOIS
DEPARTMENT OF TRANSPORTATION

CROSS SECTIONS IL 94

SCALE: | SHEET OF SHEETS | STA. 1172+50.00 TO STA. 1173+00.00

F.A.P. RTE.	SECTION	COUNTY	TOTAL SHEETS	SHEET NO.
685/538	(112)RS-3,L,N,I	HANCOCK	156	98

CONTRACT NO. 72C60

ILLINOIS FED. AID PROJECT

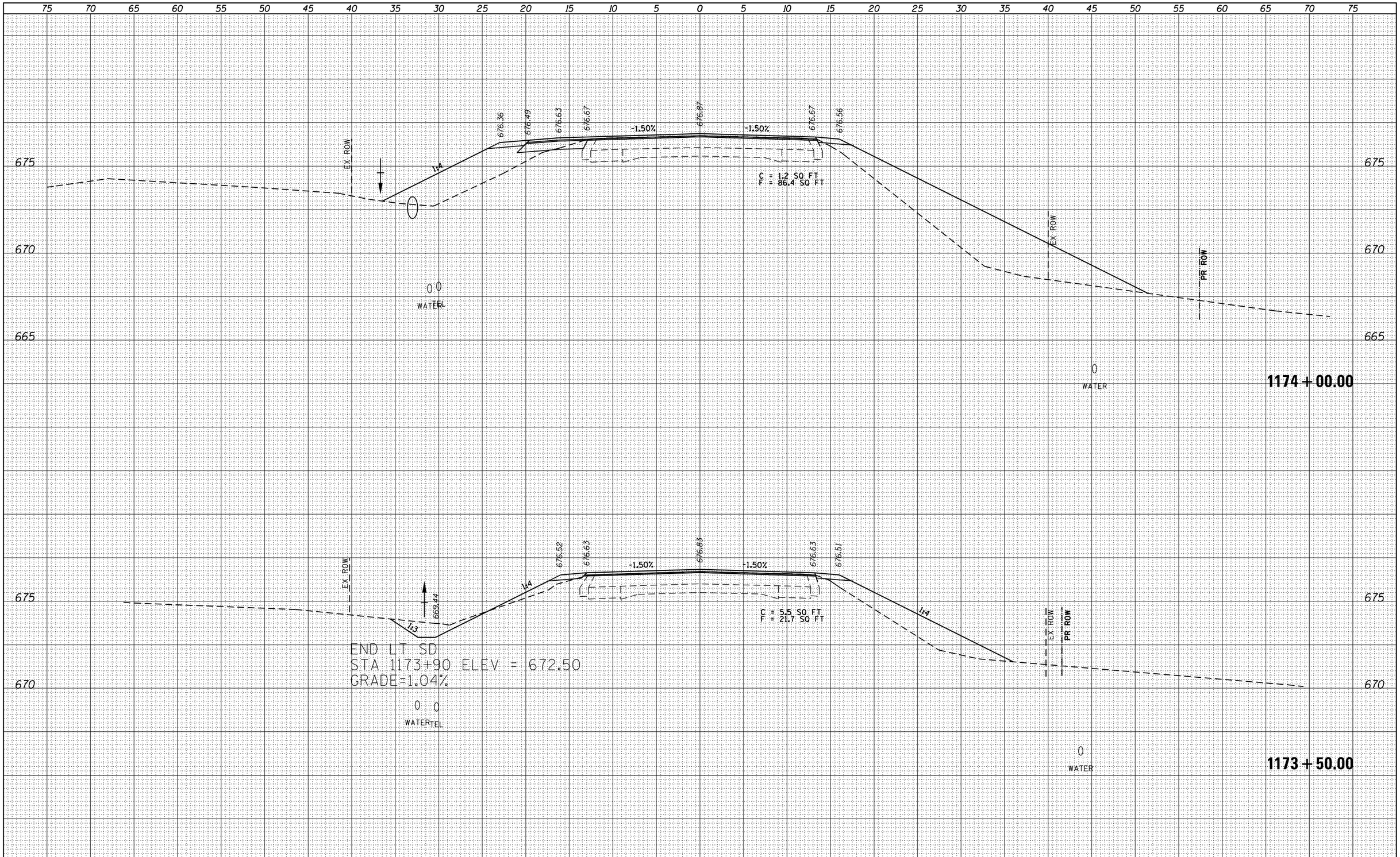

FINAL SURVEY		BY	DATE
NOTE BOOK	SURVEYED		
	PLOTTED		
	TEMPLATE		
	AREAS		
NO.	AREAS CHECKED		

ORIGINAL SURVEY		BY	DATE
NOTE BOOK	SURVEYED		
	PLOTTED		
	TEMPLATE		
	AREAS		
NO.	AREAS CHECKED		

FILE NAME = pw:\\IL084EBIDINTEG.illinois.gov:PWIDOT\Documents\IDOT Offices\District 6\Projects\D672C60\CADD\ENGINEER\District edit\CADD Sheets\x672C60-94(IDOT).dgn	USER NAME = sparksgw	DESIGNED -	REVISED -
	PLOT SCALE = 10.0000 ' / in.	CHECKED -	REVISED -
Default	PLOT DATE = 10/23/2014	DATE -	REVISED -

STATE OF ILLINOIS
DEPARTMENT OF TRANSPORTATION

CROSS SECTIONS IL 94

SCALE: | SHEET OF SHEETS | STA. 1173+50.00 TO STA. 1174+00.00

F.A.P. RTE.	SECTION	COUNTY	TOTAL SHEETS	SHEET NO.
685/538	(112)RS-3,L,N,I	HANCOCK	156	99

CONTRACT NO. 72C60

ILLINOIS FED. AID PROJECT

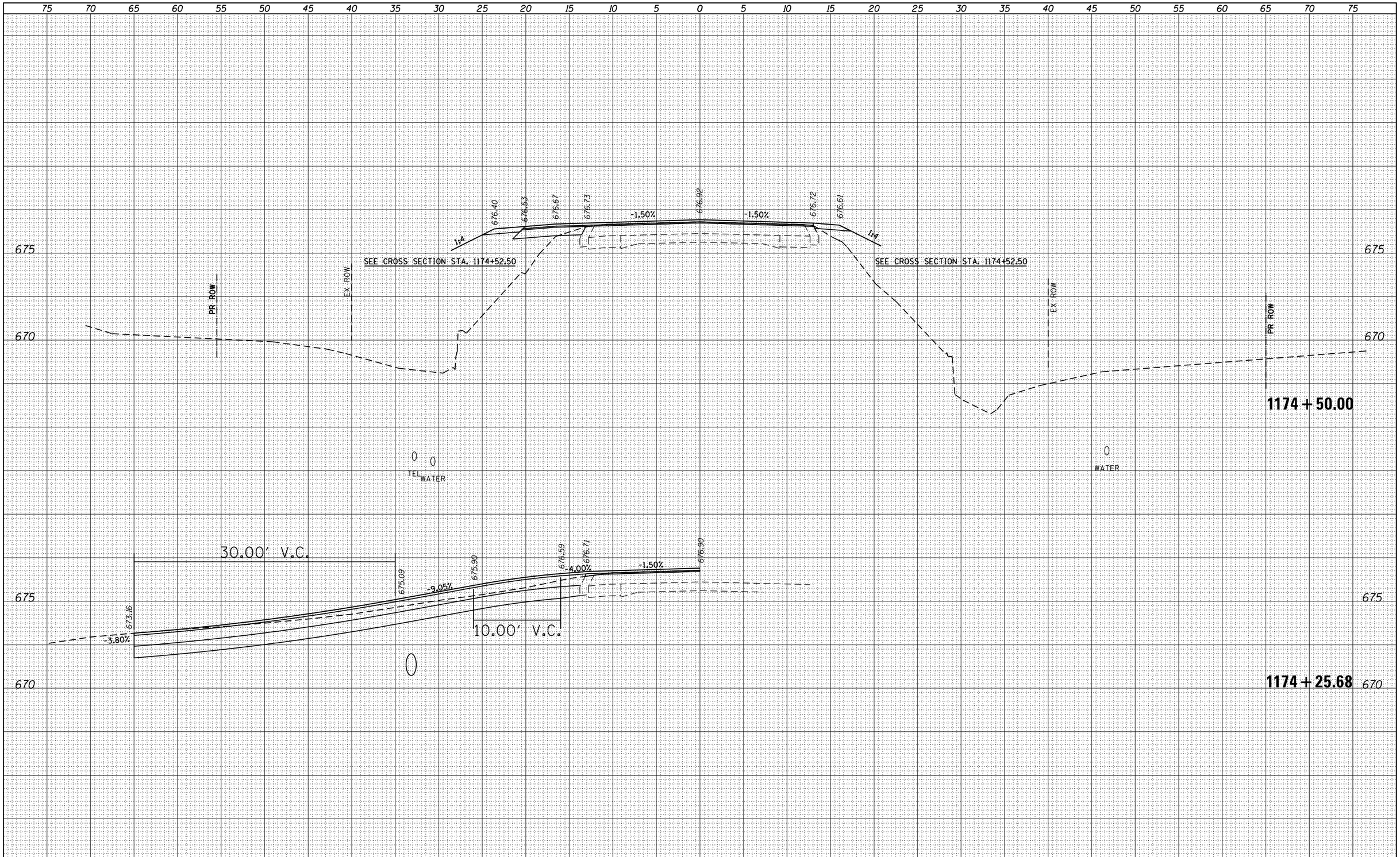

FINAL SURVEY		BY	DATE
NOTE BOOK	SURVEYED		
	PLOTTED		
	TEMPLATE		
	AREAS		
	AREAS CHECKED		
NO.			

ORIGINAL SURVEY		BY	DATE
NOTE BOOK	SURVEYED		
	PLOTTED		
	TEMPLATE		
	AREAS		
	AREAS CHECKED		
NO.			

FILE NAME = pw:\\IL084EBIDINTEG.illinois.gov:PWIDOT\Documents\IDOT Offices\District 6\Projects\D672C60\CADD\ENGINEER\District edit\CADD Sheets\xs94(IBOT).dgn	USER NAME = sparksgw	DESIGNED -	REVISED -
		DRAWN -	REVISED -
	PLOT SCALE = 10.0000 ' / in.	CHECKED -	REVISED -
Default	PLOT DATE = 10/23/2014	DATE -	REVISED -

STATE OF ILLINOIS
DEPARTMENT OF TRANSPORTATION

CROSS SECTIONS IL 94

SCALE: | SHEET OF SHEETS | STA. 1174+24.48 TO STA. 1174+50.00

F.A.P. RTE.	SECTION	COUNTY	TOTAL SHEETS	SHEET NO.
685/538	(112)RS-3,L,N,I	HANCOCK	156	100
		CONTRACT NO. 72C60		
		ILLINOIS FED. AID PROJECT		