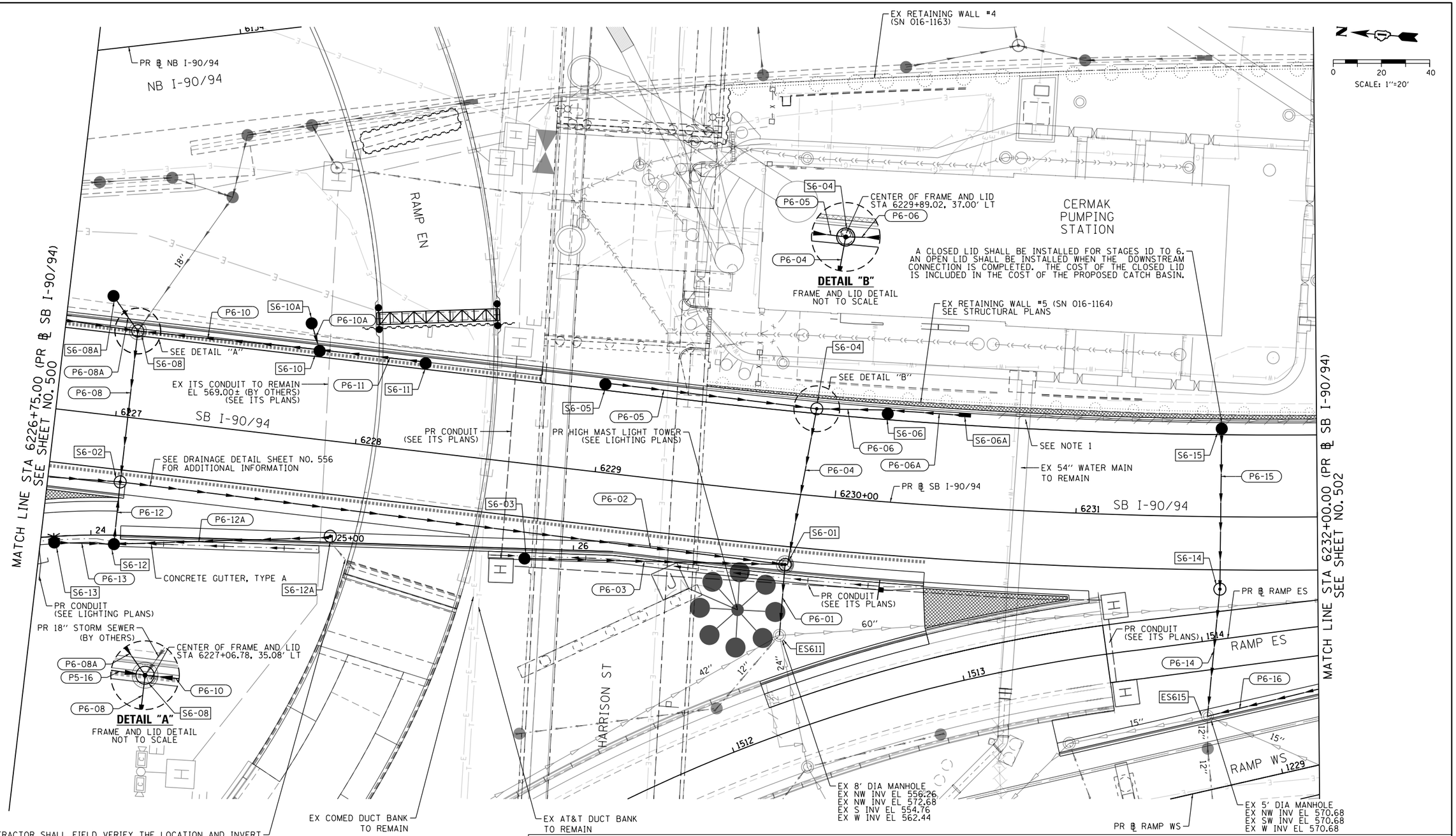

NOTES

1. THE CONTRACTOR SHALL USE EXTRA CAUTION WHEN WORKING NEAR THE PRESTRESSED CONCRETE CYLINDER PIPE (PCCP) FEEDER MAINS NEAR CERMAK PUMPING STATION.

PROPOSED DRAINAGE AND UTILITIES LEGEND

- EXISTING MANHOLE
- EXISTING CATCH BASIN
- EXISTING INLET
- MANHOLE TO BE INSTALLED BY OTHERS
- CATCH BASIN TO BE INSTALLED BY OTHERS
- INLET TO BE INSTALLED BY OTHERS
- PROPOSED DRAINAGE STRUCTURE TYPE 4
- PROPOSED MANHOLE
- PROPOSED CATCH BASIN
- PROPOSED INLET
- EXISTING BRIDGE SCUPPER
- STORM SEWER TO BE INSTALLED BY OTHERS
- ABANDON AND FILL EXISTING STORM SEWER
- PROPOSED STORM SEWER
- PROPOSED STORM SEWER TO BE INSTALLED BY OTHERS (62A76, 62J31, 60X94)

AECOM
303 EAST WACKER DRIVE, SUITE 1400
CHICAGO, IL 60601-5276
PHONE: (312) 373-7700 FAX: (312) 373-6800

D162A77-SHT-Drain-Pr-06.dgn	DESIGNED - AFC	REVISED -	
USER NAME = ChiuA	DRAWN - AFC	REVISED -	
PLOT SCALE = 40.0000 ' / in.	CHECKED - MJE	REVISED -	
PLOT DATE = 3/10/2020	DATE - 3/4/2020	REVISED -	

STATE OF ILLINOIS
DEPARTMENT OF TRANSPORTATION

PROPOSED DRAINAGE AND UTILITIES PLAN
SB I-90/94

SCALE: 1"=20' | SHEET 6 OF 11 SHEETS | STA. 6226+75.00 TO STA. 6232+00.00

F.A.I. RTE.	SECTION	COUNTY	TOTAL SHEETS	SHEET NO.
90/94/290	2015-018R	COOK	1360	501

CONTRACT NO. 62A77

ILLINOIS FED. AID PROJECT

FILE PATH = pw:\\AECOM-NA-AWS1.aecomonline.local:AECOM_DS02_NA\Documents\01 Americas\Transportation\60269938 Circle\Phase_II\000_CAD\006_Roadway\Sheets\62A77 Contracts\D162A77-SHT-Drain-Pr-06.dgn

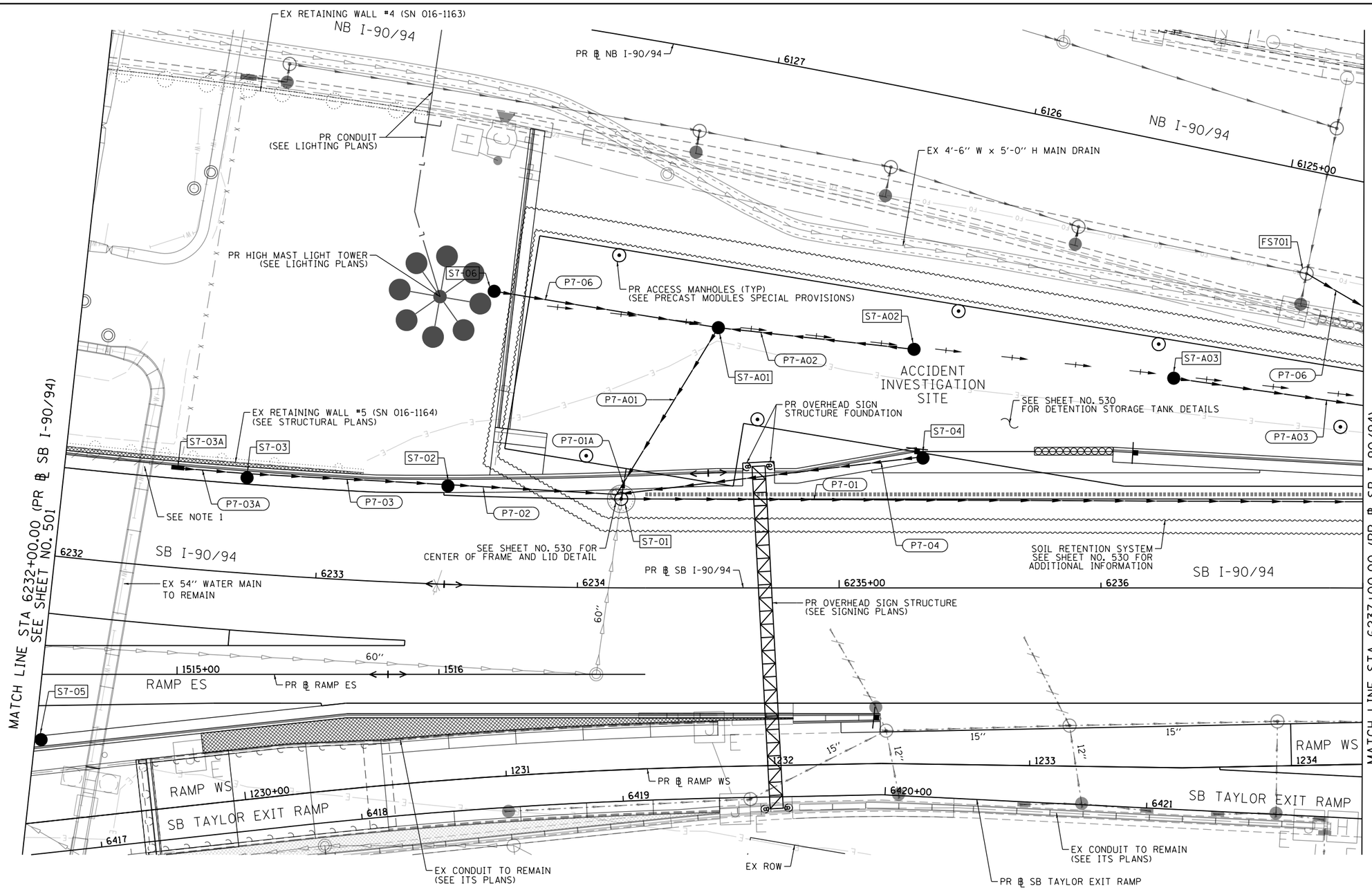

NOTES

1. THE CONTRACTOR SHALL USE EXTRA CAUTION WHEN WORKING NEAR THE PRESTRESSED CONCRETE CYLINDER PIPE (PCCP) FEEDER MAINS NEAR CERMAK PUMPING STATION.
2. ALL STRUCTURES DENOTED AS "FS" ARE TO BE INSTALLED BY OTHERS IN CONTRACT 62A76. CONTRACTOR COOPERATION IS REQUIRED.

PROPOSED DRAINAGE AND UTILITIES LEGEND

- EXISTING MANHOLE
- EXISTING CATCH BASIN
- EXISTING INLET
- MANHOLE TO BE INSTALLED BY OTHERS
- CATCH BASIN TO BE INSTALLED BY OTHERS
- INLET TO BE INSTALLED BY OTHERS
- PROPOSED DRAINAGE STRUCTURE TYPE 4
- PROPOSED MANHOLE
- PROPOSED CATCH BASIN
- PROPOSED INLET
- EXISTING BRIDGE SCUPPER
- STORM SEWER TO BE INSTALLED BY OTHERS
- ABANDON AND FILL EXISTING STORM SEWER
- PROPOSED STORM SEWER
- PROPOSED STORM SEWER TO BE INSTALLED BY OTHERS (62A76, 62J31, 60X94)

AECOM
303 EAST WACKER DRIVE, SUITE 1400
CHICAGO, IL 60601-5276
PHONE: (312) 373-7700 FAX: (312) 373-6800

D162A77-SHT-Drain-Pr-07.dgn	DESIGNED - AFC	REVISED -	
USER NAME = chiua	DRAWN - AFC	REVISED -	
PLOT SCALE = 40.0000 ' / in.	CHECKED - MJE	REVISED -	
PLOT DATE = 1/31/2020	DATE - 1/29/2019	REVISED -	

STATE OF ILLINOIS
DEPARTMENT OF TRANSPORTATION

PROPOSED DRAINAGE AND UTILITIES PLAN
SB I-90/94

SCALE: 1"=20' | SHEET 7 OF 11 SHEETS | STA. 6232+00.00 TO STA. 6237+00.00

F.A.I. RTE.	SECTION	COUNTY	TOTAL SHEETS	SHEET NO.
90/94/290	2015-018R	COOK	1360	502

CONTRACT NO. 62A77
ILLINOIS FED. AID PROJECT

FILE PATH = pw:\\AECOM-NA-AWS1.aecomonline.local:AECOM_DS02_NA\Documents\01 Americas\Transportation\60269938 Circle\Phase II\000 CAD\006 Roadway\Sheets\62A77 Contracts\D162A77-SHT-Drain-Pr-07.dgn

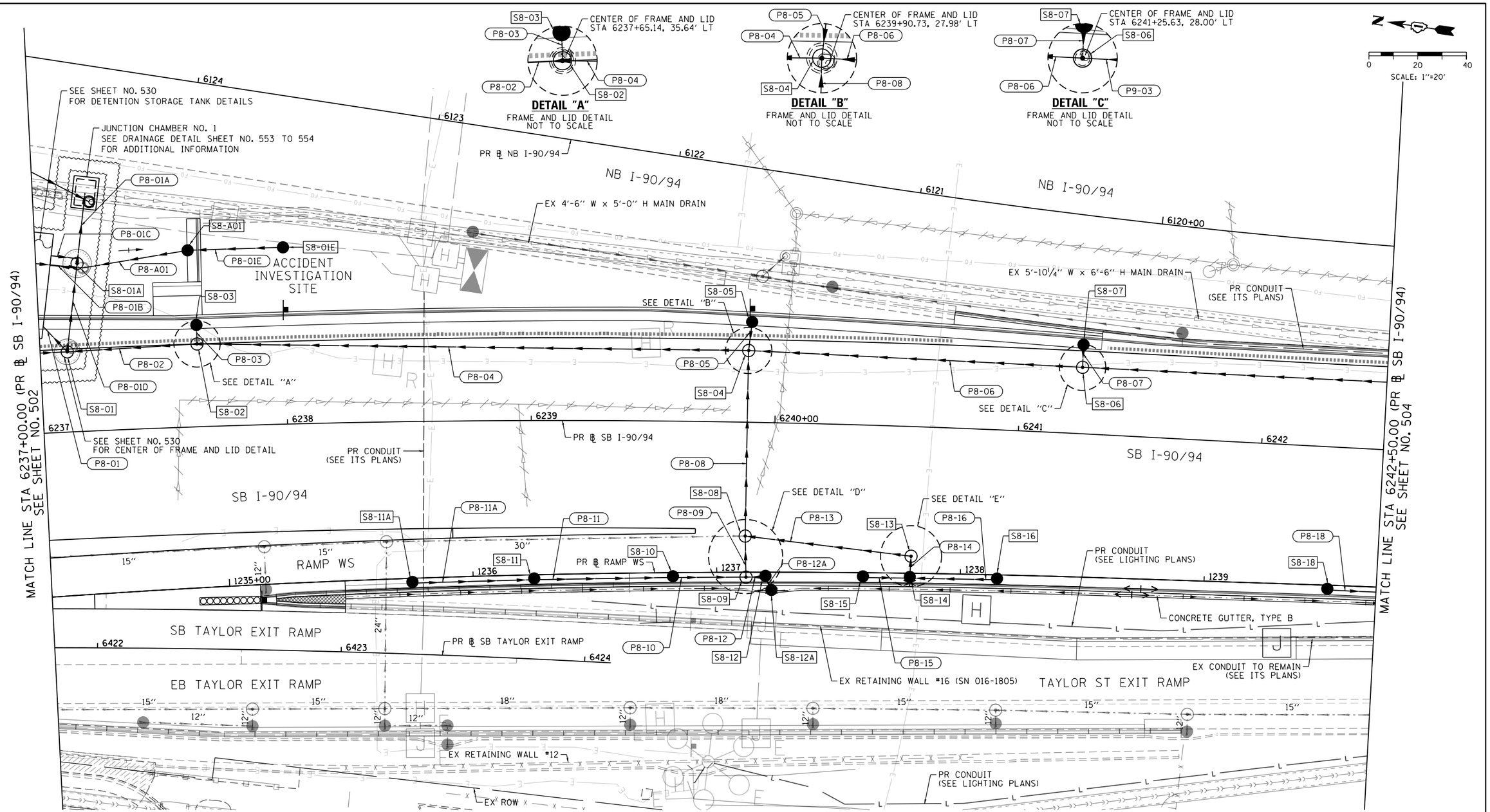

PROPOSED DRAINAGE AND UTILITIES LEGEND

- EXISTING MANHOLE
- EXISTING CATCH BASIN
- EXISTING INLET
- MANHOLE TO BE INSTALLED BY OTHERS
- CATCH BASIN TO BE INSTALLED BY OTHERS
- INLET TO BE INSTALLED BY OTHERS
- PROPOSED DRAINAGE STRUCTURE TYPE 4
- PROPOSED MANHOLE
- PROPOSED CATCH BASIN
- PROPOSED INLET
- EXISTING BRIDGE SCUPPER
- STORM SEWER TO BE INSTALLED BY OTHERS
- ABANDON AND FILL EXISTING STORM SEWER
- PROPOSED STORM SEWER
- PROPOSED STORM SEWER TO BE INSTALLED BY OTHERS (62A76, 62J31, 60X94)

AECOM
303 EAST WACKER DRIVE, SUITE 1400
CHICAGO, IL 60601-5276
PHONE: (312) 373-7700 FAX: (312) 373-6800

D162A77-SHT-Drain-Pr-08.dgn	DESIGNED - AFC	REVISED -	
USER NAME = chiua	DRAWN - AFC	REVISED -	
PLOT SCALE = 40.0000 ' / in.	CHECKED - MJE	REVISED -	
PLOT DATE = 1/31/2020	DATE - 1/29/2019	REVISED -	

STATE OF ILLINOIS
DEPARTMENT OF TRANSPORTATION

PROPOSED DRAINAGE AND UTILITIES PLAN
SB I-90/94

SCALE: 1"=20' | SHEET 8 OF 11 SHEETS | STA. 6237+00.00 TO STA. 6242+50.00

F.A.I. RTE.	SECTION	COUNTY	TOTAL SHEETS	SHEET NO.
90/94/290	2015-018R	COOK	1360	503

CONTRACT NO. 62A77
ILLINOIS FED. AID PROJECT

FILE PATH = pw:\\AECOM-NA-AWS1.aecomonline.local:AECOM.DS02.NA\Documents\01 Americas\Transportation\60269938 Circle\Phase II\000 CAD\006.Roadway\Sheets\62A77 Contracts\D162A77-SHT-Drain-Pr-08.dgn

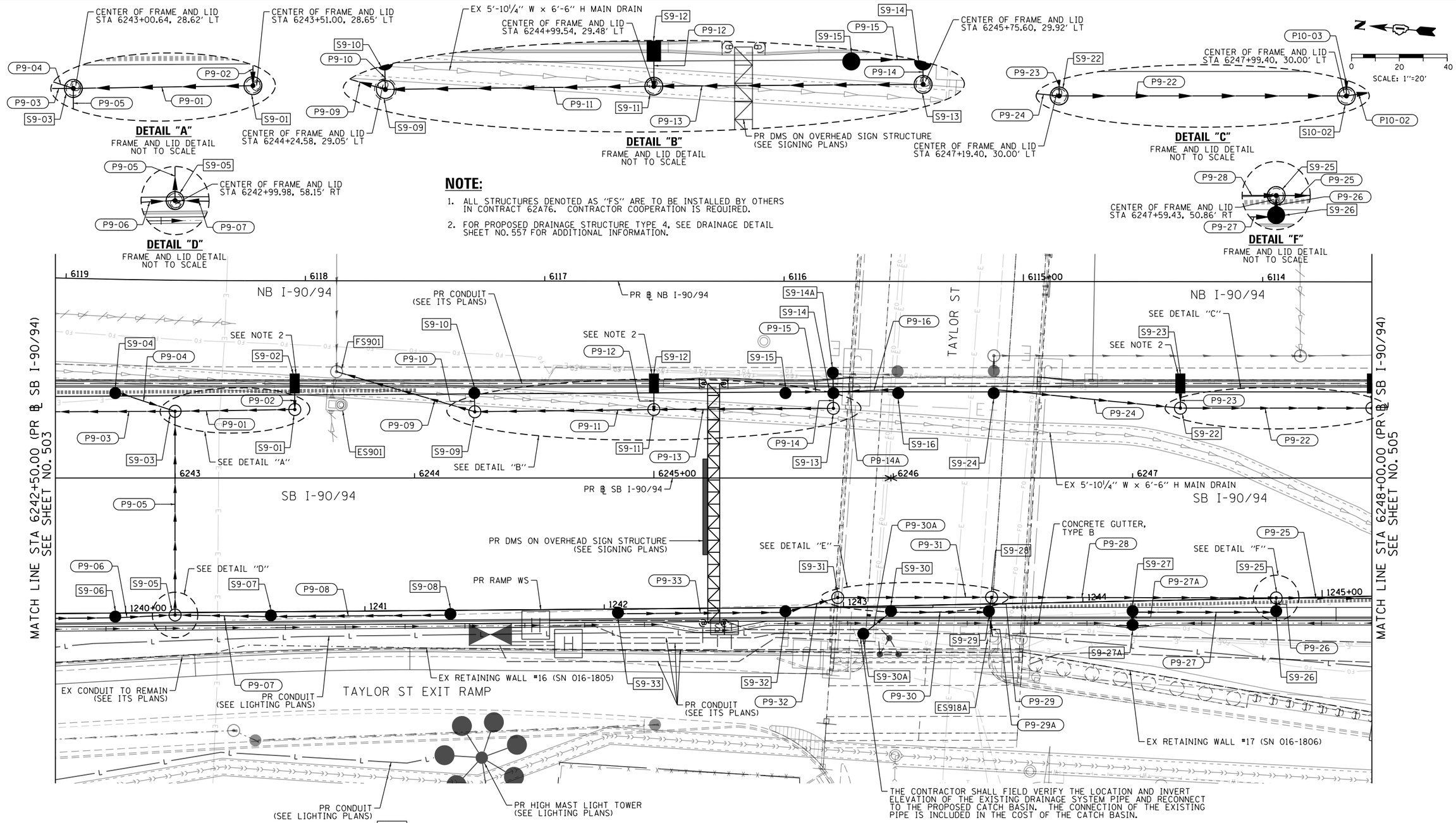

NOTE:

1. ALL STRUCTURES DENOTED AS "FS" ARE TO BE INSTALLED BY OTHERS IN CONTRACT 62A76. CONTRACTOR COOPERATION IS REQUIRED.
2. FOR PROPOSED DRAINAGE STRUCTURE TYPE 4, SEE DRAINAGE DETAIL SHEET NO. 557 FOR ADDITIONAL INFORMATION.

PROPOSED DRAINAGE AND UTILITIES LEGEND

- EXISTING MANHOLE
- EXISTING CATCH BASIN
- EXISTING INLET
- MANHOLE TO BE INSTALLED BY OTHERS
- CATCH BASIN TO BE INSTALLED BY OTHERS
- INLET TO BE INSTALLED BY OTHERS
- PROPOSED DRAINAGE STRUCTURE TYPE 4
- PROPOSED MANHOLE
- PROPOSED CATCH BASIN
- PROPOSED INLET
- EXISTING BRIDGE SCUPPER
- STORM SEWER TO BE INSTALLED BY OTHERS
- ABANDON AND FILL EXISTING STORM SEWER
- PROPOSED STORM SEWER
- PROPOSED STORM SEWER TO BE INSTALLED BY OTHERS (62A76, 62J31, 60X94)

AECOM
303 EAST WACKER DRIVE, SUITE 1400
CHICAGO, IL 60601-5276
PHONE: (312) 373-7700 FAX: (312) 373-6800

D162A77-SHT-Drain-Pr-09.dgn	DESIGNED - AFC	REVISED -	
USER NAME = chua	DRAWN - AFC	REVISED -	
PLOT SCALE = 40.0000 ' / in.	CHECKED - MJE	REVISED -	
PLOT DATE = 1/31/2020	DATE - 1/29/2019	REVISED -	

STATE OF ILLINOIS
DEPARTMENT OF TRANSPORTATION

PROPOSED DRAINAGE AND UTILITIES PLAN
SB I-90/94

SCALE: 1"=20' | SHEET 9 OF 11 SHEETS | STA. 6242+50.00 TO STA. 6248+00.00

F.A.I. RTE.	SECTION	COUNTY	TOTAL SHEETS	SHEET NO.
90/94/290	2015-018R	COOK	1360	504
		CONTRACT NO. 62A77		
	ILLINOIS FED. AID PROJECT			

FILE PATH = pw:\\AECOM-NA-AWSIaecomonline.local:AECOM_DS02_NA\Documents\01 Americas\Transportation\60269938 Circle\Phase_II\000.CAD\006.Roadway\Sheets\62A77 Contracts\D162A77-SHT-Drain-Pr-09.dgn

NOTE:

1. FOR PROPOSED DRAINAGE STRUCTURE TYPE 4, SEE DRAINAGE DETAIL SHEET NO. 557 FOR ADDITIONAL INFORMATION.
2. THE EXISTING STRUCTURE AND INVERT ELEVATIONS PROVIDED ARE FROM SURVEY AND EXISTING PLANS. THE CONTRACTOR SHALL FIELD VERIFY THE INFORMATION PRIOR TO ORDERING OF MATERIALS.

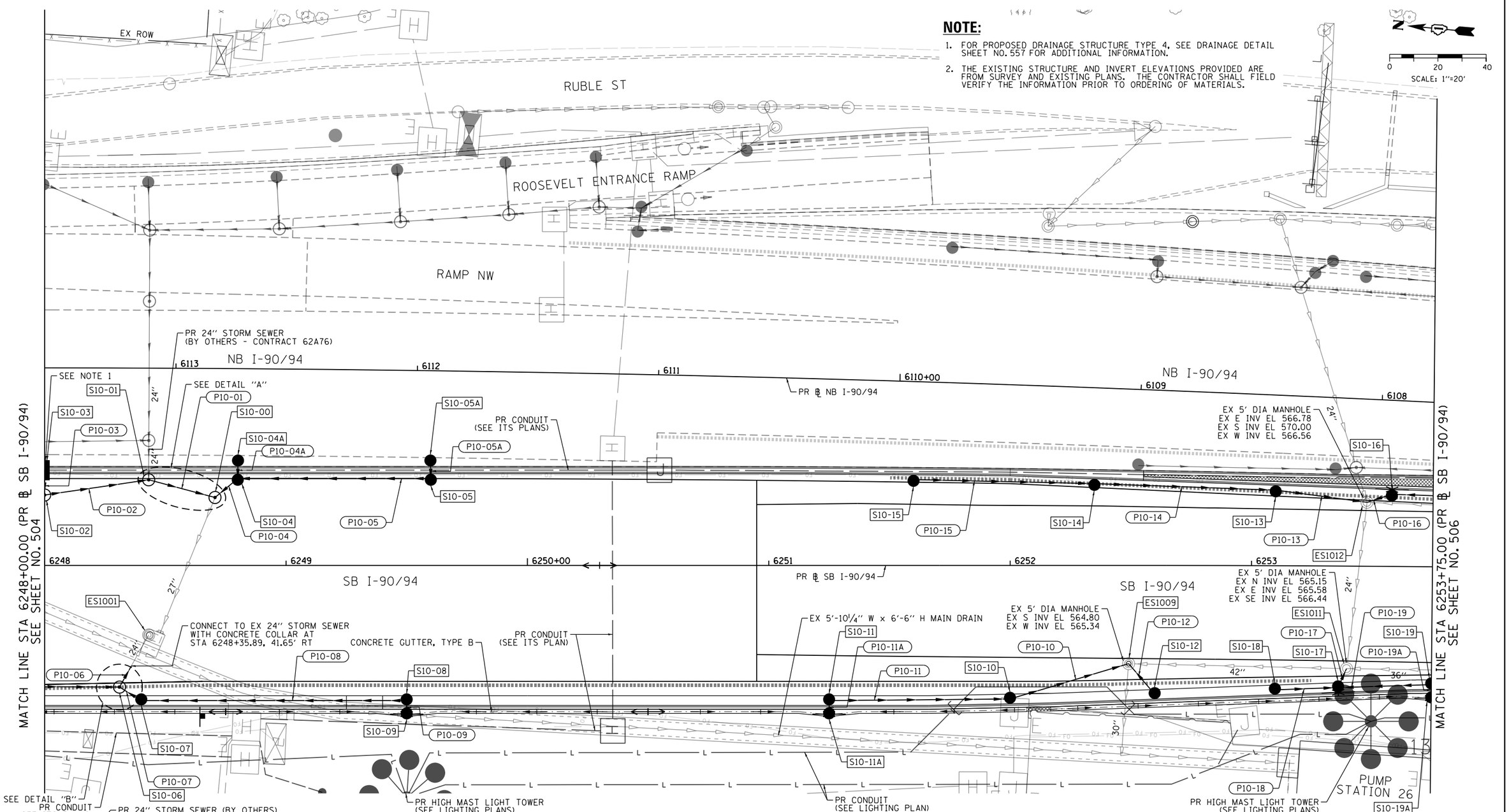

PROPOSED DRAINAGE AND UTILITIES LEGEND

- EXISTING MANHOLE
- EXISTING CATCH BASIN
- EXISTING INLET
- MANHOLE TO BE INSTALLED BY OTHERS
- CATCH BASIN TO BE INSTALLED BY OTHERS
- INLET TO BE INSTALLED BY OTHERS
- PROPOSED DRAINAGE STRUCTURE TYPE 4
- PROPOSED MANHOLE
- PROPOSED CATCH BASIN
- PROPOSED INLET
- EXISTING BRIDGE SCUPPER
- STORM SEWER TO BE INSTALLED BY OTHERS
- ABANDON AND FILL EXISTING STORM SEWER
- PROPOSED STORM SEWER
- PROPOSED STORM SEWER TO BE INSTALLED BY OTHERS (62A76, 62J31, 60X94)

AECOM
303 EAST WACKER DRIVE, SUITE 1400
CHICAGO, IL 60601-5276
PHONE: (312) 373-7700 FAX: (312) 373-6800

D162A77-SHT-Drain-Pr-10.dgn	DESIGNED - AFC	REVISED -	
USER NAME = chiua	DRAWN - AFC	REVISED -	
PLOT SCALE = 40.0000 ' / in.	CHECKED - MJE	REVISED -	
PLOT DATE = 1/31/2020	DATE - 1/29/2019	REVISED -	

STATE OF ILLINOIS
DEPARTMENT OF TRANSPORTATION

PROPOSED DRAINAGE AND UTILITIES PLAN
SB I-90/94

SCALE: 1"=20' | SHEET 10 OF 11 SHEETS | STA. 6248+00.00 TO STA. 6254+00.00

F.A.I. RTE.	SECTION	COUNTY	TOTAL SHEETS	SHEET NO.
90/94/290	2015-018R	COOK	1360	505

CONTRACT NO. 62A77
ILLINOIS FED. AID PROJECT

FILE PATH = pw:\\AECOM-NA-AWS\eacomonline.local\ACCOM_DS02_NA\Documents\01 Americas\Transportation\60269938 Circle\Phase II\000.CAD\006.Roadway\Sheets\62A77 Contracts\D162A77-SHT-Drain-Pr-10.dgn

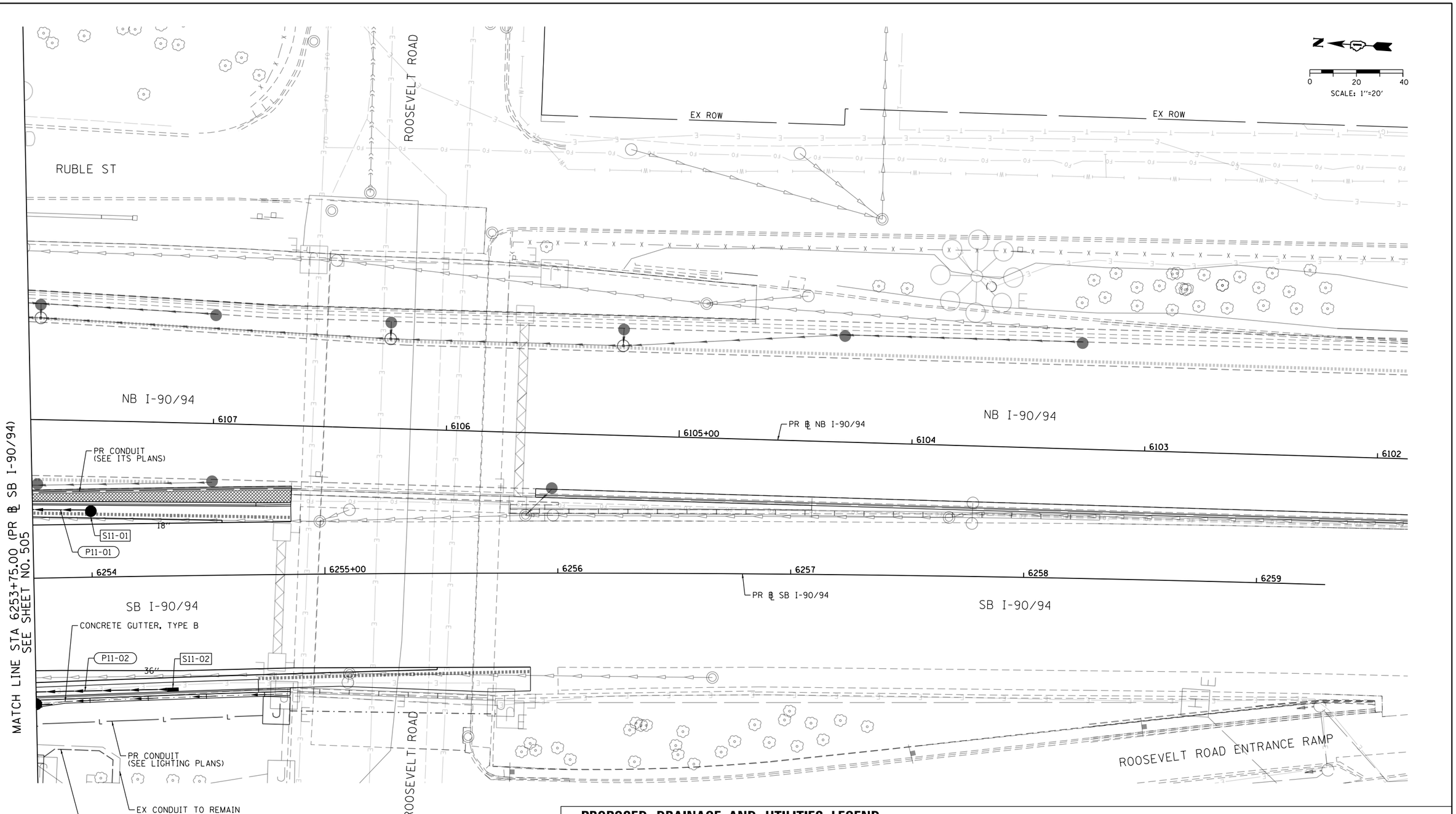

PROPOSED DRAINAGE AND UTILITIES LEGEND

- EXISTING MANHOLE
- EXISTING CATCH BASIN
- EXISTING INLET
- MANHOLE TO BE INSTALLED BY OTHERS
- CATCH BASIN TO BE INSTALLED BY OTHERS
- INLET TO BE INSTALLED BY OTHERS
- PROPOSED DRAINAGE STRUCTURE TYPE 4
- PROPOSED MANHOLE
- PROPOSED CATCH BASIN
- PROPOSED INLET
- EXISTING BRIDGE SCUPPER
- STORM SEWER TO BE INSTALLED BY OTHERS
- ABANDON AND FILL EXISTING STORM SEWER
- PROPOSED STORM SEWER
- PROPOSED STORM SEWER TO BE INSTALLED BY OTHERS (62A76, 62J31, 60X94)

AECOM
303 EAST WACKER DRIVE, SUITE 1400
CHICAGO, IL 60601-5276
PHONE: (312) 373-7700 FAX: (312) 373-6800

D162A77-SHT-Drain-Pr-11.dgn	DESIGNED - AFC	REVISED -	
USER NAME = chiua	DRAWN - AFC	REVISED -	
PLOT SCALE = 40.0000 ' / in.	CHECKED - MJE	REVISED -	
PLOT DATE = 1/31/2020	DATE - 1/29/2019	REVISED -	

STATE OF ILLINOIS
DEPARTMENT OF TRANSPORTATION

PROPOSED DRAINAGE AND UTILITIES PLAN
SB I-90/94

SCALE: 1"=20' | SHEET 11 OF 11 SHEETS | STA. 6254+00.00 TO STA. 6259+29.52

F.A.I. RTE.	SECTION	COUNTY	TOTAL SHEETS	SHEET NO.
90/94/290	2015-018R	COOK	1360	506
		CONTRACT NO. 62A77		
		ILLINOIS FED. AID PROJECT		

FILE PATH = pw:\\AECOM-NA-AWS1.aecomonline.local:AECOM_DS02_NA\Documents\01 Americas\Transportation\60269938 Circle\Phase II\000_CAD\006_Roadway\Sheets\62A77 Contracts\D162A77-SHT-Drain-Pr-11.dgn

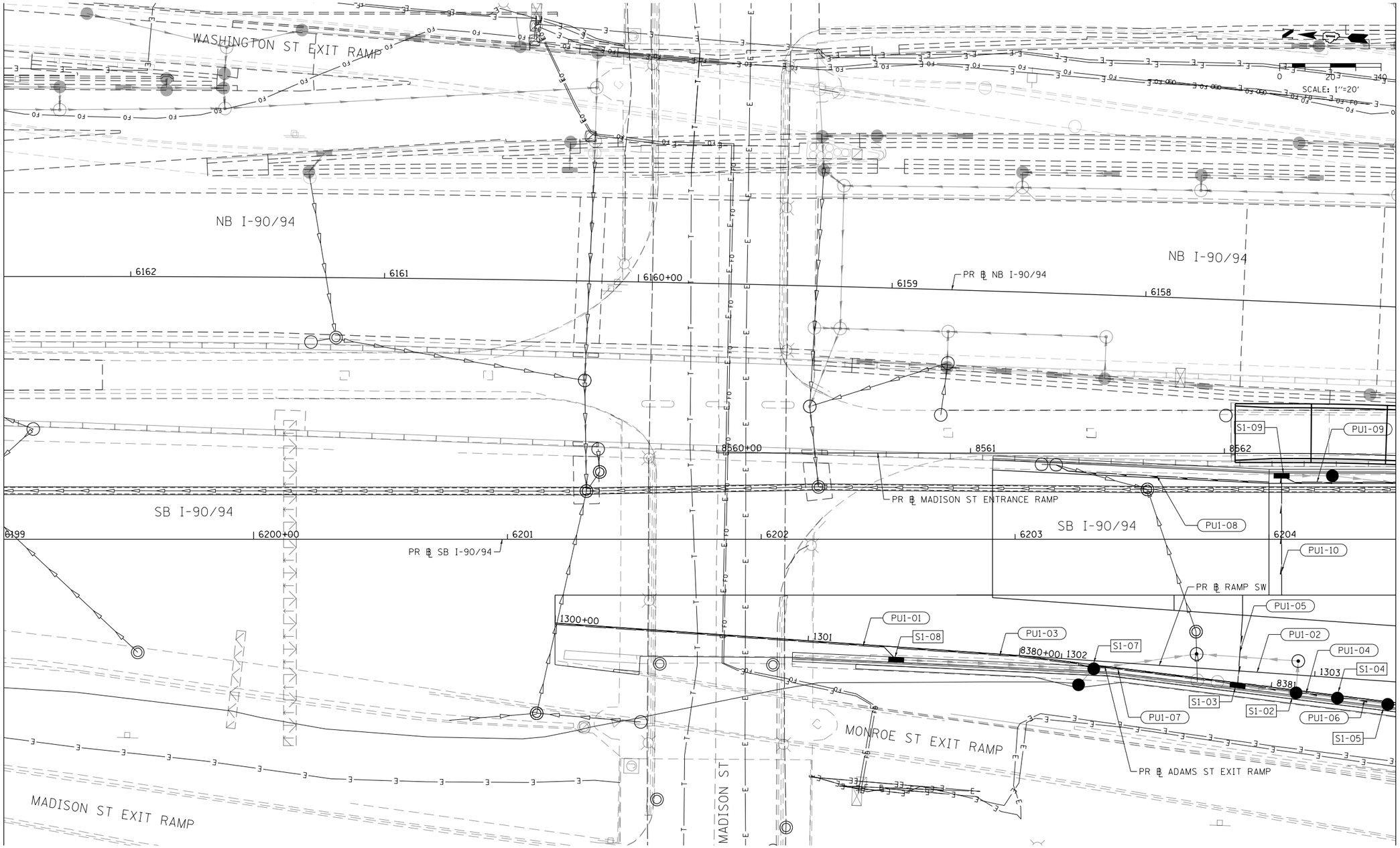

FILE PATH = pw:\\AECOM-NA-AWSideecomonline.local:AECOM_DS02_NA\Documents\01 Americas\Transportation\60269938 Circle\Phase.II\008.CAD\086.Roadway\Sheets\62A77 Contract\D162A77-SHT-Drain-Subsurface-01.dgn

TranSystems

D162A77-SHT-Drain-Subsurface-01.dgn	DESIGNED - MRC	REVISED -	
USER NAME = mrciss	DRAWN - MRC	REVISED -	
PLOT SCALE = 40.0000 ' / in.	CHECKED - JMG	REVISED -	
PLOT DATE = 1/29/2020	DATE - 1/29/2019	REVISED -	

STATE OF ILLINOIS
DEPARTMENT OF TRANSPORTATION

PROPOSED SUBSURFACE DRAINAGE PLAN
SB I-90/94

SCALE: 1"=20' | SHEET 1 OF 11 SHEETS | STA. 6221+05.00 TO STA. 6226+75.00

F.A.I. RTE.	SECTION	COUNTY	TOTAL SHEETS	SHEET NO.
90/94/290	2015-019R	COOK	1360	507
		CONTRACT NO. 62A77		
		ILLINOIS FED. AID PROJECT		

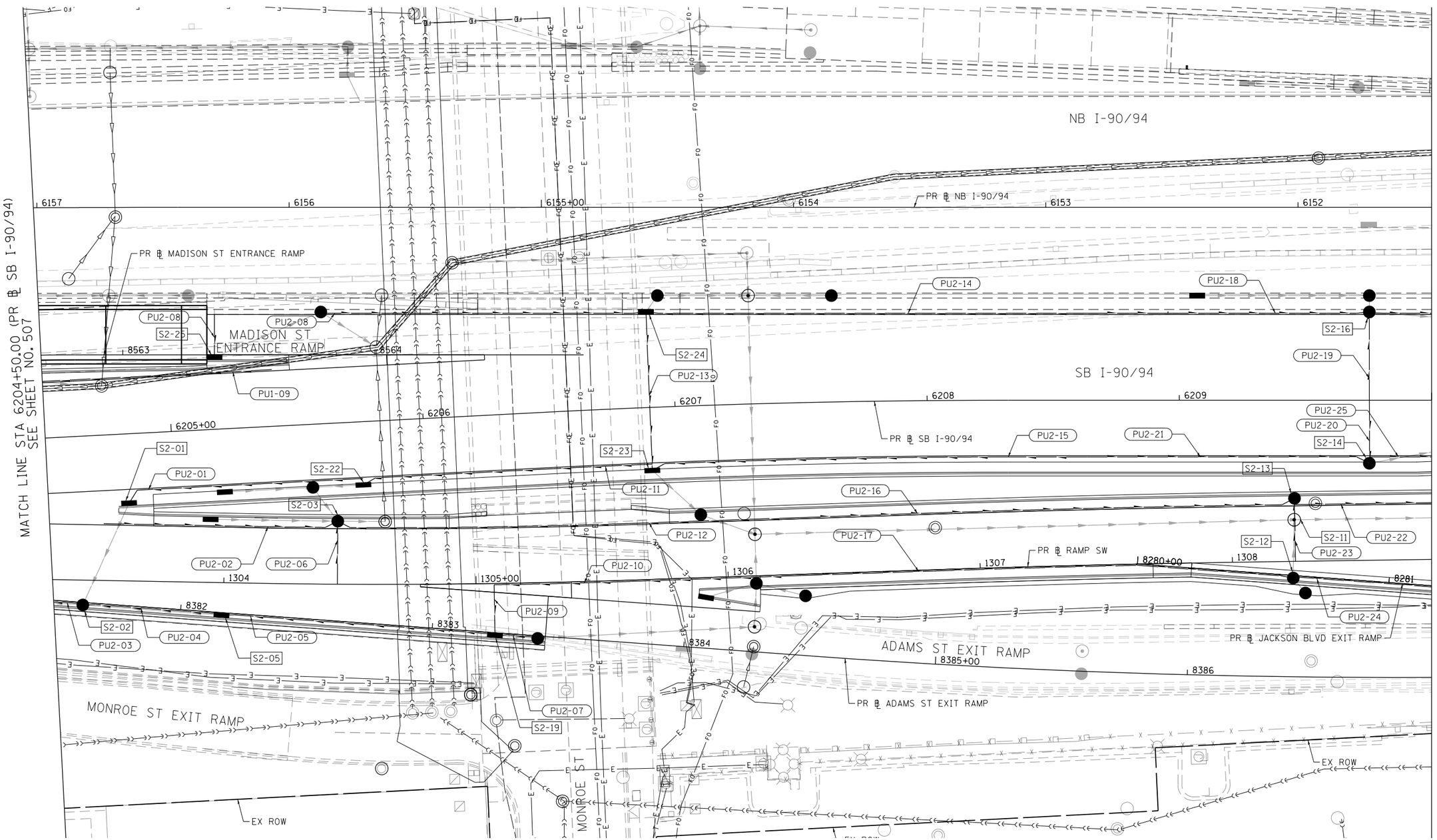

FILE PATH = pw:\\AECOM-NA-AWSuseconnline.local:AECOM_DS02_NA\Documents\01 Americas\Transportation\60269938 Circle\Phase..II\002.CAD\006.Roadway\Sheets\62A77 Contract\D162A77-SHT-Drain-Subsurface-02.dgn

TranSystems

D162A77-SHT-Drain-Subsurface-02.dgn	DESIGNED - MRC	REVISED -	
USER NAME = mrciss	DRAWN - MRC	REVISED -	
PLOT SCALE = 40.0000 ' / in.	CHECKED - JMG	REVISED -	
PLOT DATE = 1/29/2020	DATE - 1/29/2019	REVISED -	

STATE OF ILLINOIS
DEPARTMENT OF TRANSPORTATION

PROPOSED SUBSURFACE DRAINAGE PLAN
SB I-90/94

SCALE: 1"=20' | SHEET 2 OF 11 SHEETS | STA. 6221+05.00 TO STA. 6226+75.00

F.A.I. RTE.	SECTION	COUNTY	TOTAL SHEETS	SHEET NO.
90/94/290	2015-019R	COOK	1360	508

CONTRACT NO. 62A77

ILLINOIS FED. AID PROJECT

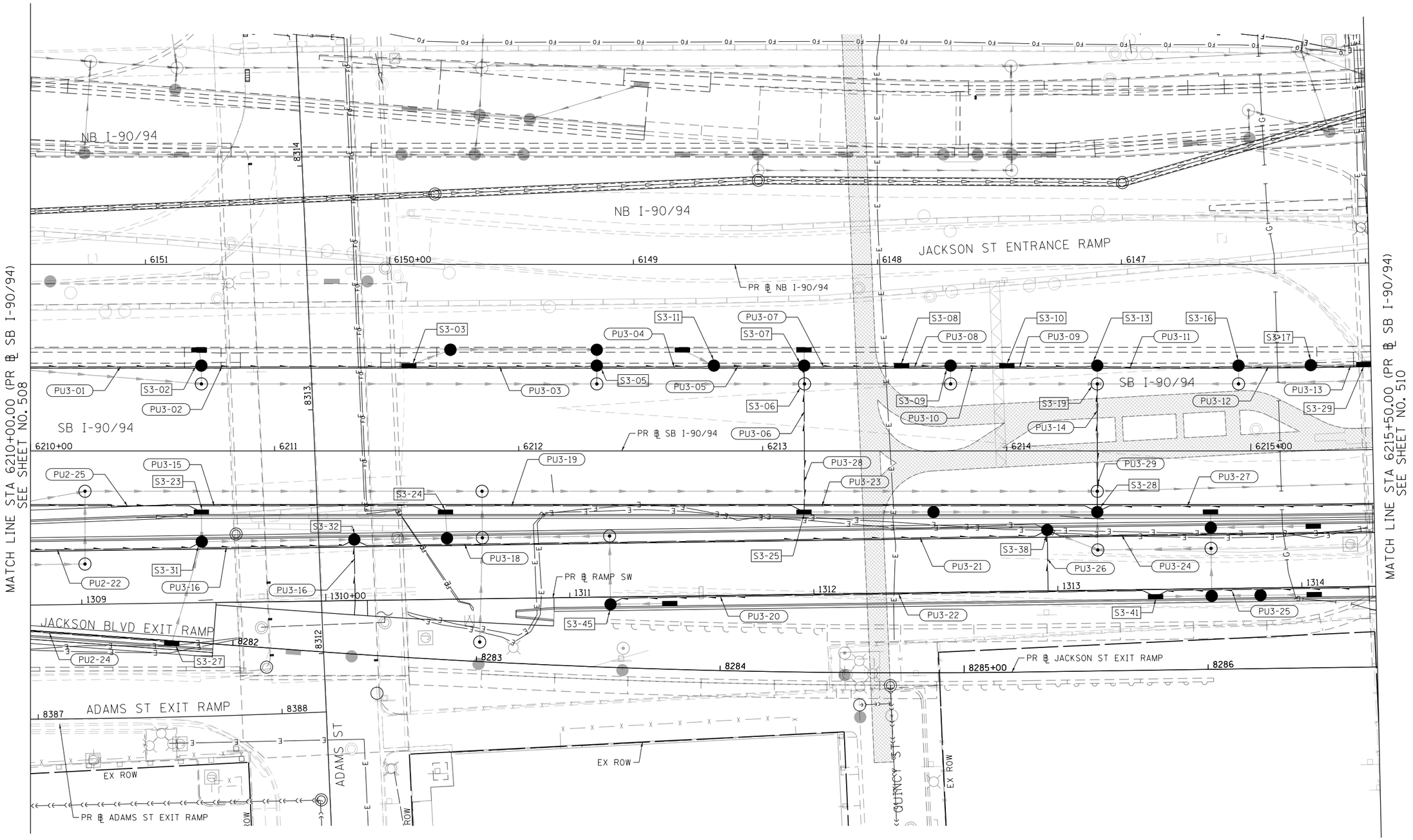

FILE PATH = pw:\\AECOM-NA-AWS.aecomonline.local:AECOM.DS02.NA\Documents\01 Americas\Transportation\60269938 Circle\Phase II\000.CAD\006.Roadway\Sheets\62A77-SHT-Drain-Subsurface-03.dgn

TranSystems

D162A77-SHT-Drain-Subsurface-03.dgn	DESIGNED - MRC	REVISED -	
USER NAME = mrciss	DRAWN - MRC	REVISED -	
PLOT SCALE = 40.0000 ' / in.	CHECKED - JMG	REVISED -	
PLOT DATE = 1/29/2020	DATE - 1/29/2019	REVISED -	

STATE OF ILLINOIS
DEPARTMENT OF TRANSPORTATION

PROPOSED SUBSURFACE DRAINAGE PLAN
SB I-90/94

SCALE: 1"=20' | SHEET 3 OF 11 SHEETS | STA. 6221+05.00 TO STA. 6226+75.00

F.A.I. RTE.	SECTION	COUNTY	TOTAL SHEETS	SHEET NO.
90/94/290	2015-019R	COOK	1360	509
		CONTRACT NO. 62A77		
		ILLINOIS FED. AID PROJECT		

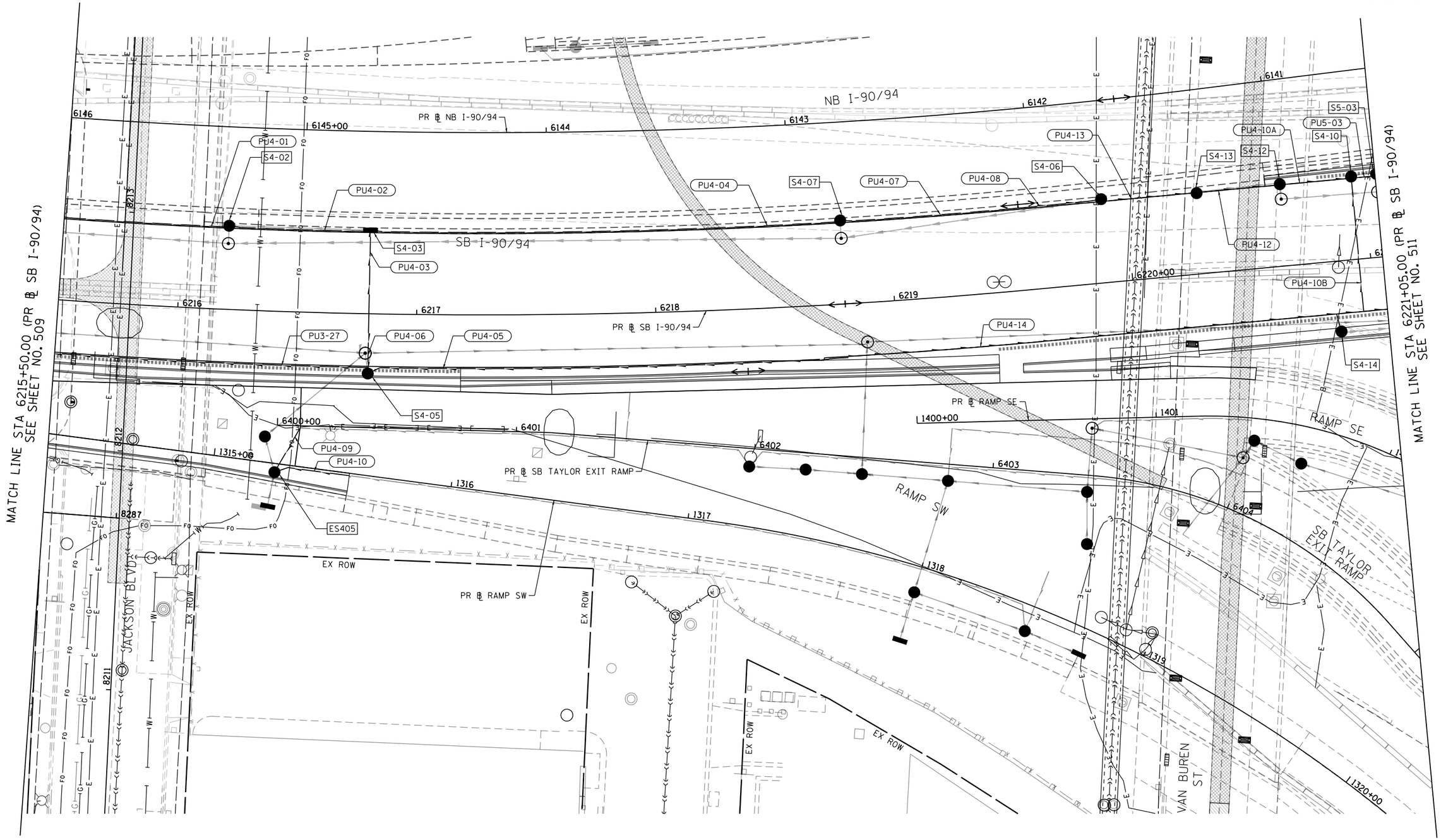

D162A77-SHT-Drain-Subsurface-04.dgn	DESIGNED - MRC	REVISED -	
USER NAME = chiua	DRAWN - MRC	REVISED -	
PLOT SCALE = 40.0000 ' / in.	CHECKED - JMG	REVISED -	
PLOT DATE = 1/31/2020	DATE - 1/29/2019	REVISED -	

TranSystems

STATE OF ILLINOIS
DEPARTMENT OF TRANSPORTATION

PROPOSED SUBSURFACE DRAINAGE PLAN
SB I-90/94

SCALE: 1"=20' | SHEET 4 OF 11 SHEETS | STA. 6221+05.00 TO STA. 6226+75.00

F.A.I. RTE.	SECTION	COUNTY	TOTAL SHEETS	SHEET NO.
90/94/290	2015-019R	COOK	1360	510

CONTRACT NO. 62A77

ILLINOIS FED. AID PROJECT

FILE PATH = pw:\\AECOM-NA-AWSI.aecomonline.local:AECOM_DS02_NA\Documents\01 Americas\Transportation\60269938 Circle\Phase II\000_CAD\006_Roadway\Sheets\62A77 Contracts\D162A77-SHT-Drain-Subsurface-04.dgn

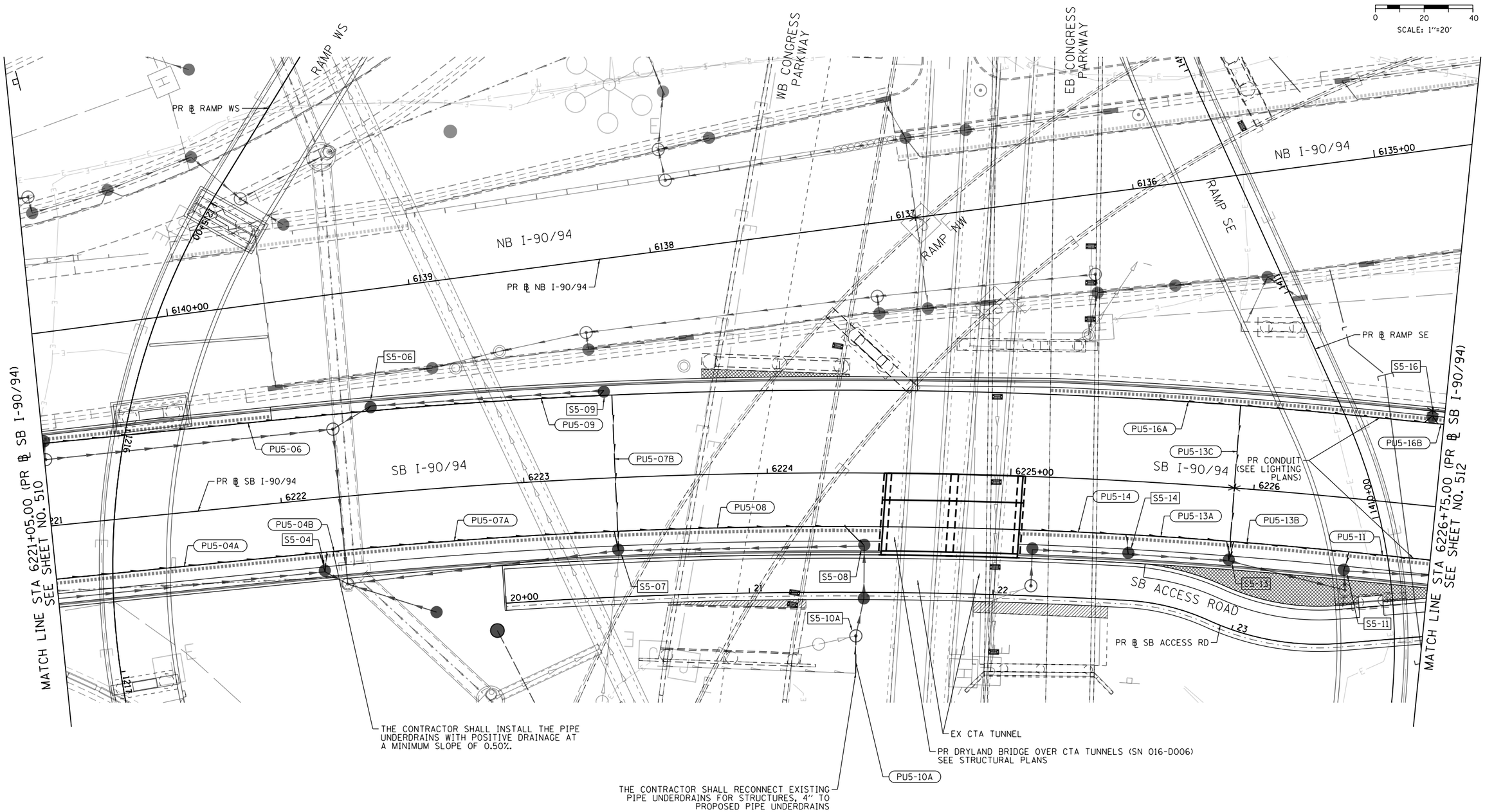

FILE PATH = pw:\\AECOM-NA-AWS\aecomonline.local\AECOM_DS02_NA\Documents\01 Americas\Transportation\60269938 Circle\Phase II\002.CAD\006.Roadway\Sheets\62A77 Contracts\D162A77-SHT-Drain-Subsurface-05.dgn

AECOM
303 EAST WACKER DRIVE, SUITE 1400
CHICAGO, IL 60601-5276
PHONE: (312) 373-7700 FAX: (312) 373-6800

D162A77-SHT-Drain-Subsurface-05.dgn	DESIGNED - AFC	REVISED -	
USER NAME = chiua	DRAWN - AFC	REVISED -	
PLOT SCALE = 40.0000 ' / in.	CHECKED - MJE	REVISED -	
PLOT DATE = 1/31/2020	DATE - 1/29/2019	REVISED -	

STATE OF ILLINOIS
DEPARTMENT OF TRANSPORTATION

PROPOSED SUBSURFACE DRAINAGE PLAN
SB I-90/94

SCALE: 1"=20' | SHEET 5 OF 11 SHEETS | STA. 6221+05.00 TO STA. 6226+75.00

F.A.I. RTE.	SECTION	COUNTY	TOTAL SHEETS	SHEET NO.
90/94/290	2015-018R	COOK	1360	511

CONTRACT NO. 62A77

ILLINOIS FED. AID PROJECT

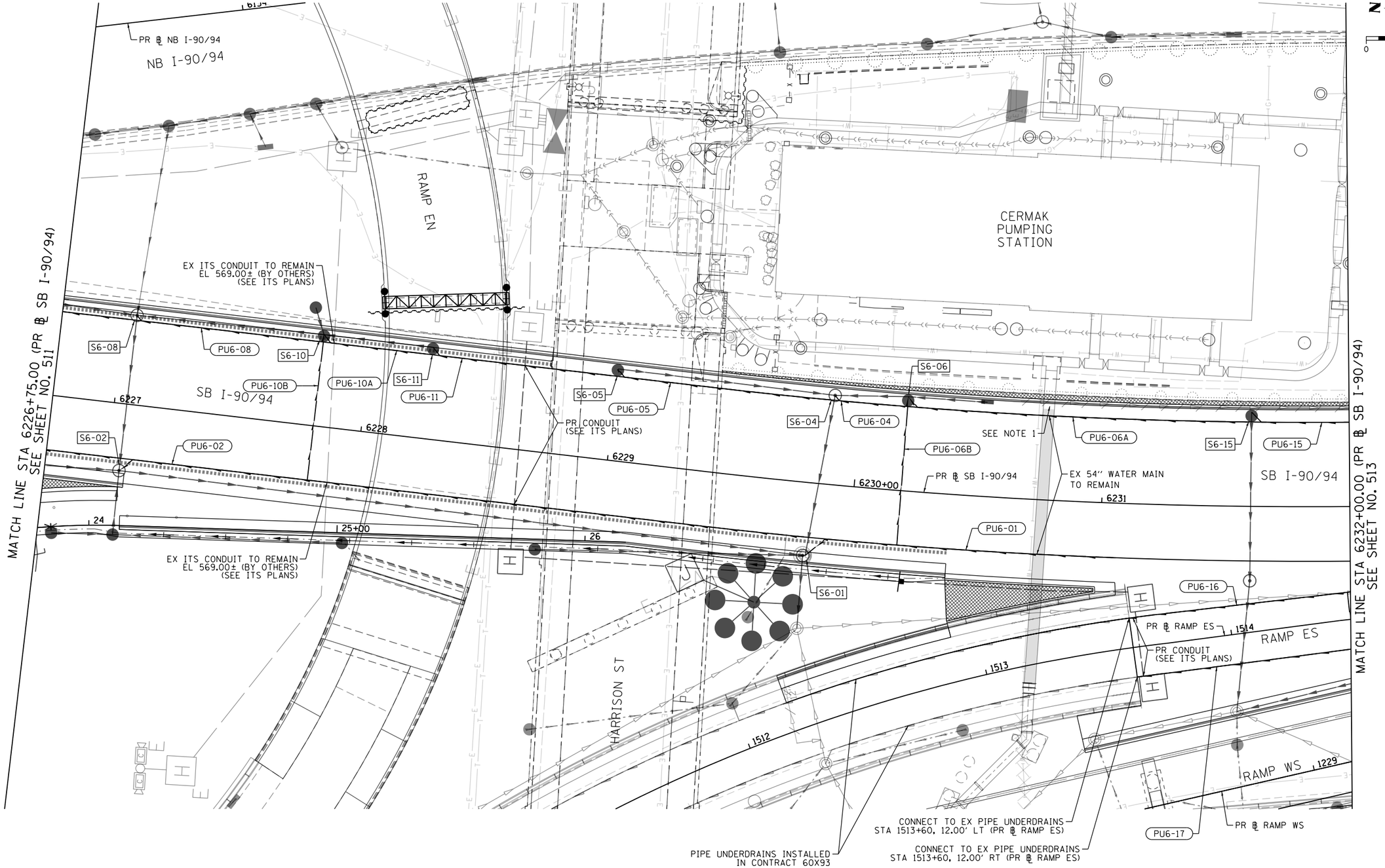

NOTES

1. THE CONTRACTOR SHALL USE EXTRA CAUTION WHEN WORKING NEAR THE PRESTRESSED CONCRETE CYLINDER PIPE (PCCP) FEEDER MAINS NEAR CERMAK PUMPING STATION.

FILE PATH = pw:\\AECOM-NA-AWS1.aecomonline.local:AECOM_DS02_NA\Documents\01 Americas\Transportation\60269938 Circle\Phase_II\000_CAD\006_Roadway\Sheets\62A77 [Contracts\D162A77-SHT-Drain-Subsurface-06.dgn

AECOM
303 EAST WACKER DRIVE, SUITE 1400
CHICAGO, IL 60601-5276
PHONE: (312) 373-7700 FAX: (312) 373-6800

D162A77-SHT-Drain-Subsurface-06.dgn	DESIGNED - AFC	REVISED -	
USER NAME = chiua	DRAWN - AFC	REVISED -	
PLOT SCALE = 40.0000 ' / in.	CHECKED - MJE	REVISED -	
PLOT DATE = 1/31/2020	DATE - 1/29/2019	REVISED -	

STATE OF ILLINOIS
DEPARTMENT OF TRANSPORTATION

PROPOSED SUBSURFACE DRAINAGE PLAN
SB I-90/94

SCALE: 1"=20' | SHEET 6 OF 11 SHEETS | STA. 6226+75.00 TO STA. 6232+00.00

F.A.I. RTE.	SECTION	COUNTY	TOTAL SHEETS	SHEET NO.
90/94/290	2015-018R	COOK	1360	512

CONTRACT NO. 62A77

ILLINOIS FED. AID PROJECT

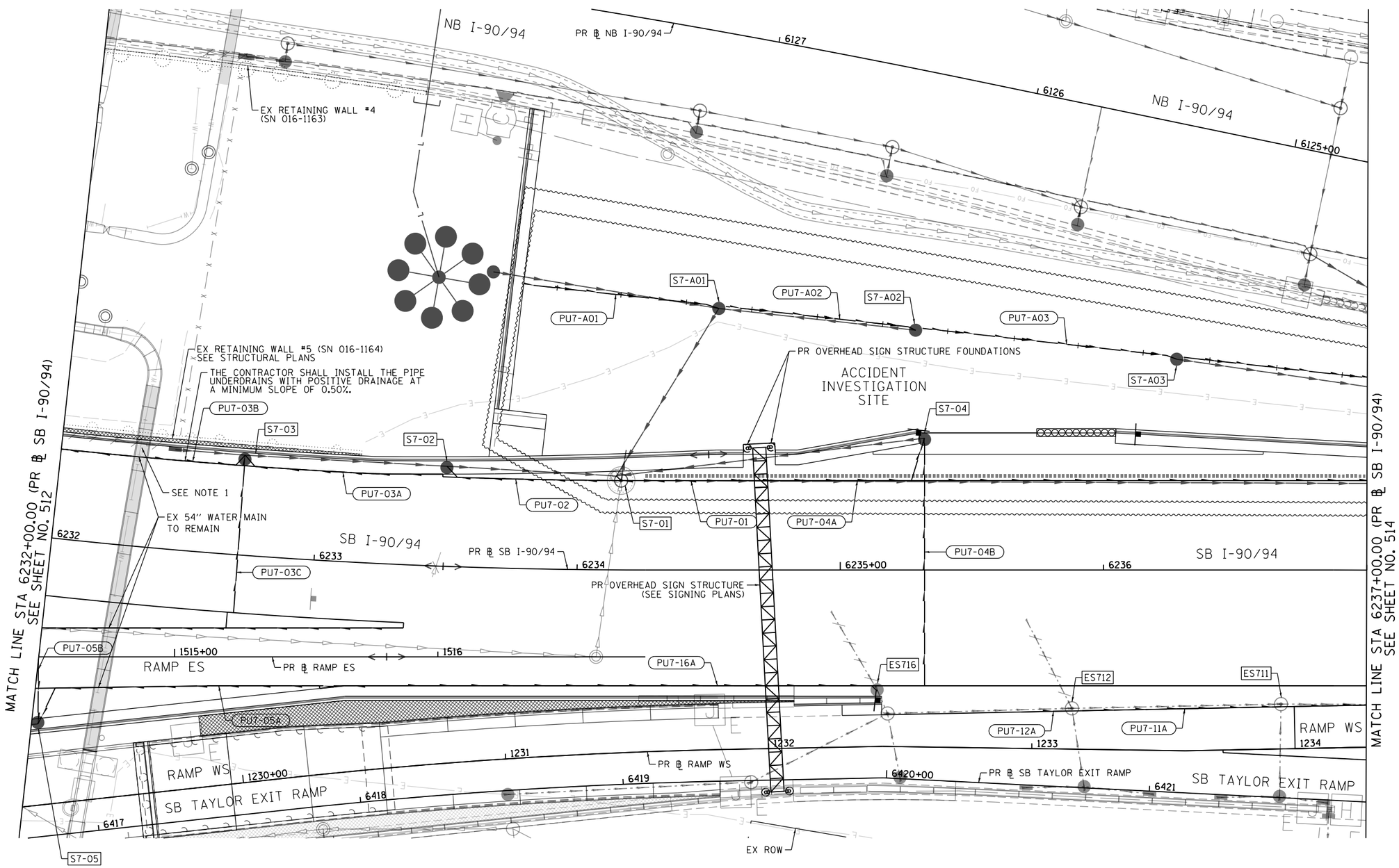

NOTES

1. THE CONTRACTOR SHALL USE EXTRA CAUTION WHEN WORKING NEAR THE PRESTRESSED CONCRETE CYLINDER PIPE (PCCP) FEEDER MAINS NEAR CERMAK PUMPING STATION.

FILE PATH = pw:\\AECOM-NA-AWS1.aecomonline.local:AECOM_DS02_NA\Documents\01 Americas\Transportation\60269938 Circle\Phase II\000_CAD\006_Roadway\Sheets\62A77 Contracts\D162A77-SHT-Drain-Subsurface-07.dgn

AECOM
303 EAST WACKER DRIVE, SUITE 1400
CHICAGO, IL 60601-5276
PHONE: (312) 373-7700 FAX: (312) 373-6800

D162A77-SHT-Drain-Subsurface-07.dgn	DESIGNED - AFC	REVISED -	
USER NAME = chiua	DRAWN - AFC	REVISED -	
PLOT SCALE = 40.0000 ' / in.	CHECKED - MJE	REVISED -	
PLOT DATE = 1/31/2020	DATE - 1/29/2019	REVISED -	

STATE OF ILLINOIS
DEPARTMENT OF TRANSPORTATION

PROPOSED SUBSURFACE DRAINAGE PLAN
SB I-90/94

SCALE: 1"=20' | SHEET 7 OF 11 SHEETS | STA. 6232+00.00 TO STA. 6237+00.00

F.A.I. RTE.	SECTION	COUNTY	TOTAL SHEETS	SHEET NO.
90/94/290	2015-018R	COOK	1360	513

CONTRACT NO. 62A77

ILLINOIS FED. AID PROJECT

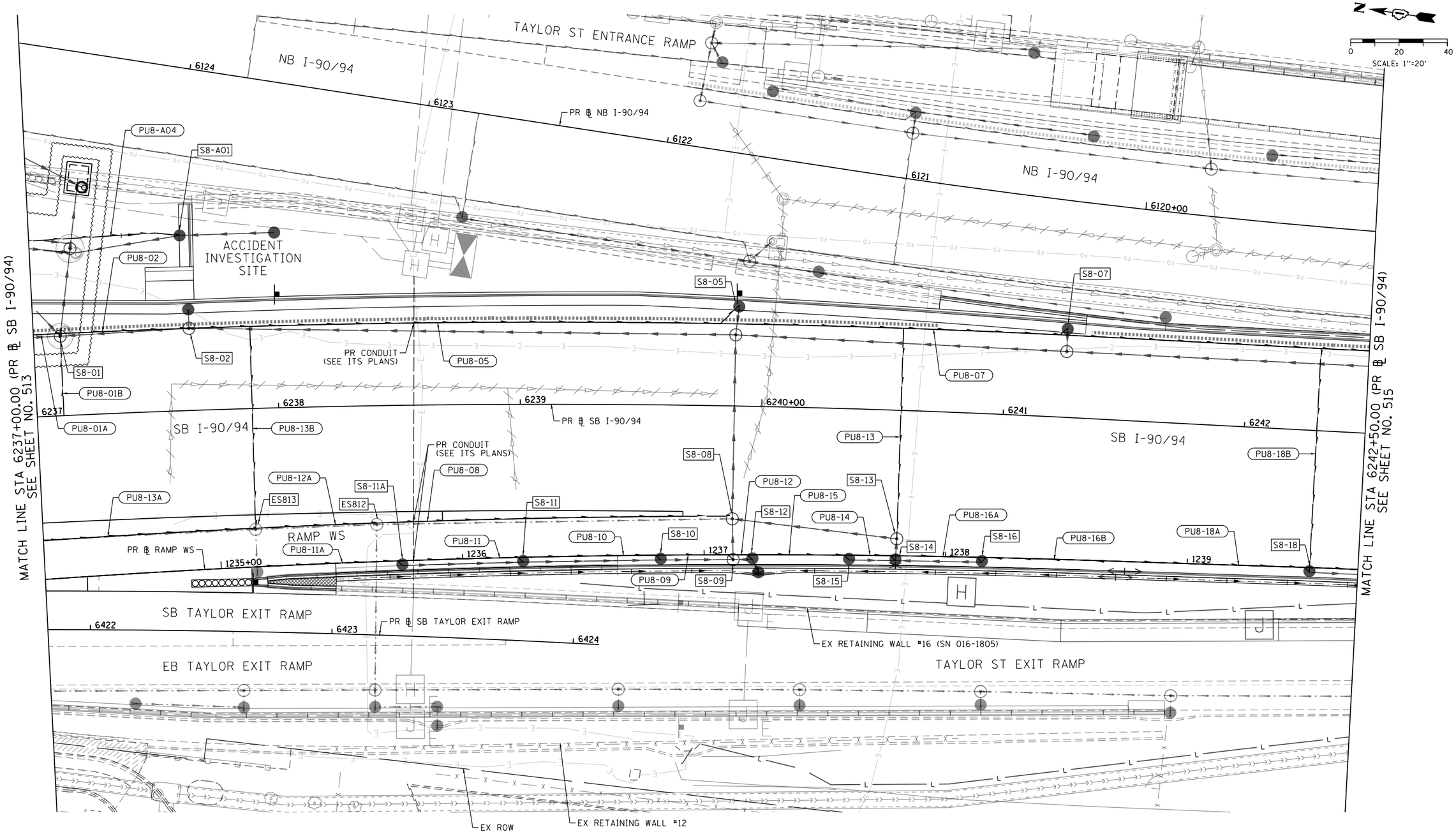

FILE PATH = pw:\\AECOM-NA-AWS1.aecomonline.local:AECOM_DS02_NA\Documents\01 Americas\Transportation\60269938 Circle\Phase II\000_CAD\006_Roadway\Sheets\62A77 Contracts\D162A77-SHT-Drain-Subsurface-08.dgn

AECOM
303 EAST WACKER DRIVE, SUITE 1400
CHICAGO, IL 60601-5276
PHONE: (312) 373-7700 FAX: (312) 373-6800

D162A77-SHT-Drain-Subsurface-08.dgn	DESIGNED - AFC	REVISED -	
USER NAME = chiua	DRAWN - AFC	REVISED -	
PLOT SCALE = 40.0000 ' / in.	CHECKED - MJE	REVISED -	
PLOT DATE = 1/31/2020	DATE - 1/29/2019	REVISED -	

STATE OF ILLINOIS
DEPARTMENT OF TRANSPORTATION

PROPOSED SUBSURFACE DRAINAGE PLAN
SB I-90/94

SCALE: 1"=20' | SHEET 8 OF 11 SHEETS | STA. 6237+00.00 TO STA. 6242+50.00

F.A.I. RTE.	SECTION	COUNTY	TOTAL SHEETS	SHEET NO.
90/94/290	2015-018R	COOK	1360	514

CONTRACT NO. 62A77

ILLINOIS FED. AID PROJECT

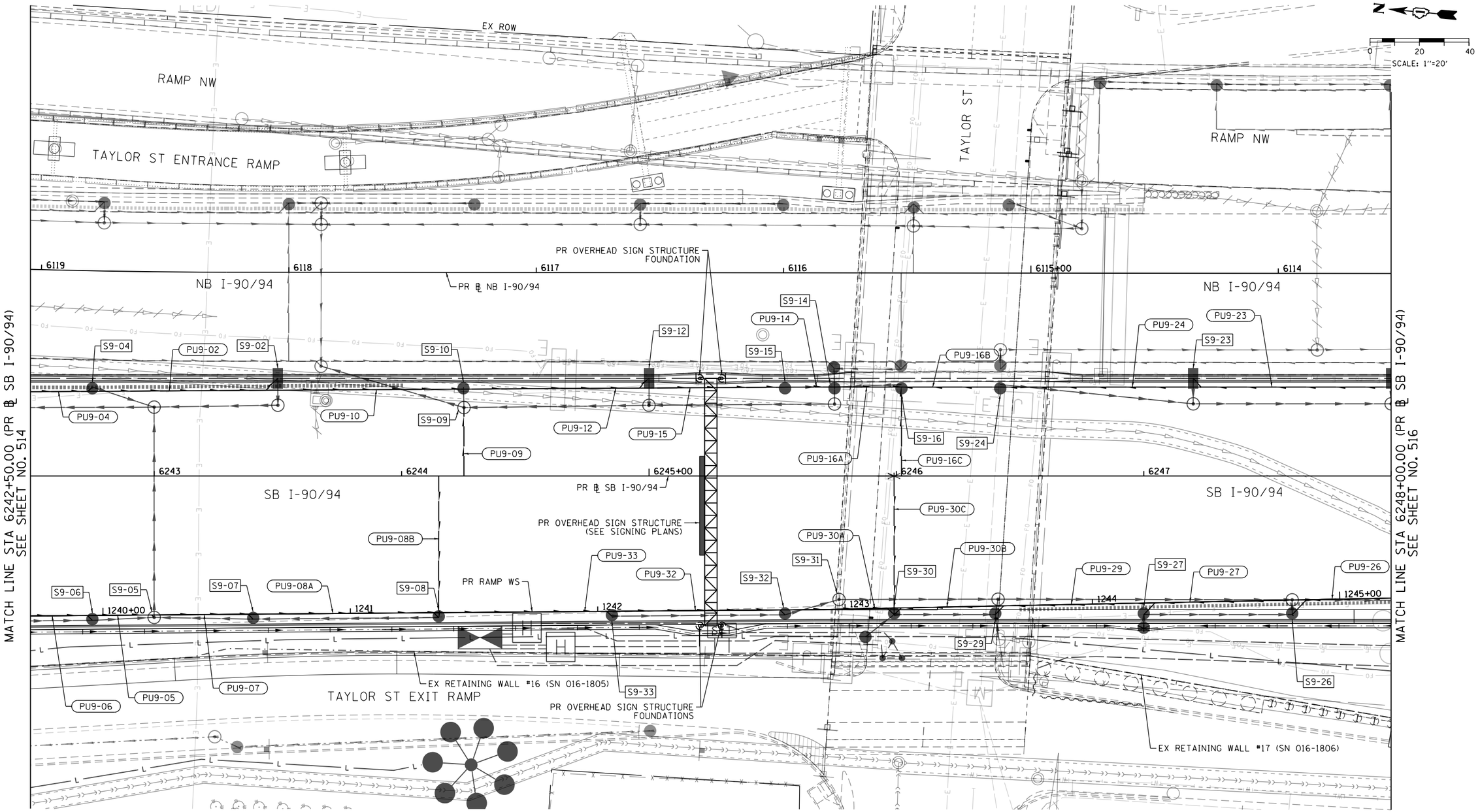

FILE PATH = pw:\\AECOM-NA-AWS1.aecomonline.local:AECOM_DS02_NA\Documents\01 Americas\Transportation\60269938 Circle\Phase II\000 CAD\006 Roadway\Sheets\62A77 Contracts\D162A77-SHT-Drain-Subsurface-09.dgn

AECOM
303 EAST WACKER DRIVE, SUITE 1400
CHICAGO, IL 60601-5276
PHONE: (312) 373-7700 FAX: (312) 373-6800

D162A77-SHT-Drain-Subsurface-09.dgn	DESIGNED - AFC	REVISED -	
USER NAME = chiua	DRAWN - AFC	REVISED -	
PLOT SCALE = 40.0000 ' / in.	CHECKED - MJE	REVISED -	
PLOT DATE = 1/31/2020	DATE - 1/29/2019	REVISED -	

STATE OF ILLINOIS
DEPARTMENT OF TRANSPORTATION

PROPOSED SUBSURFACE DRAINAGE PLAN
SB I-90/94

SCALE: 1"=20' | SHEET 9 OF 11 SHEETS | STA. 6242+50.00 TO STA. 6248+00.00

F.A.I. RTE.	SECTION	COUNTY	TOTAL SHEETS	SHEET NO.
90/94/290	2015-018R	COOK	1360	515

CONTRACT NO. 62A77

ILLINOIS FED. AID PROJECT

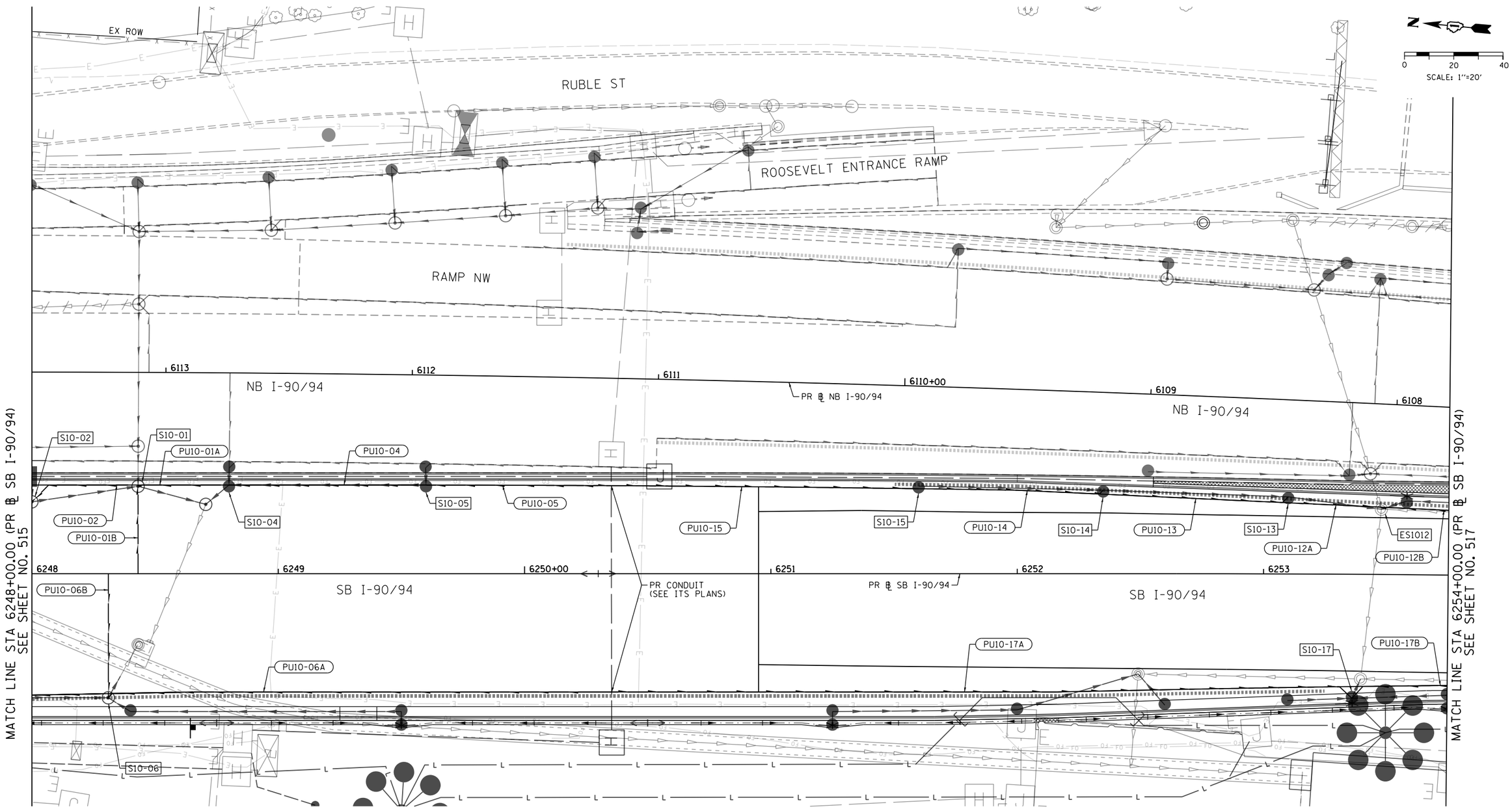

FILE PATH = pw:\\AECOM-NA-AWSLuseconnline.local:AECOM_DS02_NA\Documents\01 Americas\Transportation\60269938 Circle\Phase 1\000 CAD\006 Roadway\Sheets\62A77 Contracts\D162A77-SHT-Drain-Subsurface-10.dgn

AECOM
303 EAST WACKER DRIVE, SUITE 1400
CHICAGO, IL 60601-5276
PHONE: (312) 373-7700 FAX: (312) 373-6800

D162A77-SHT-Drain-Subsurface-10.dgn	DESIGNED - AFC	REVISED -	
USER NAME = chiua	DRAWN - AFC	REVISED -	
PLOT SCALE = 40.0000 ' / in.	CHECKED - MJE	REVISED -	
PLOT DATE = 1/31/2020	DATE - 1/29/2019	REVISED -	

STATE OF ILLINOIS
DEPARTMENT OF TRANSPORTATION

PROPOSED SUBSURFACE DRAINAGE PLAN
SB I-90/94

SCALE: 1"=20' | SHEET 10 OF 11 SHEETS | STA. 6248+00.00 TO STA. 6254+00.00

F.A.I. RTE.	SECTION	COUNTY	TOTAL SHEETS	SHEET NO.
90/94/290	2015-018R	COOK	1360	516
		CONTRACT NO. 62A77		
		ILLINOIS FED. AID PROJECT		

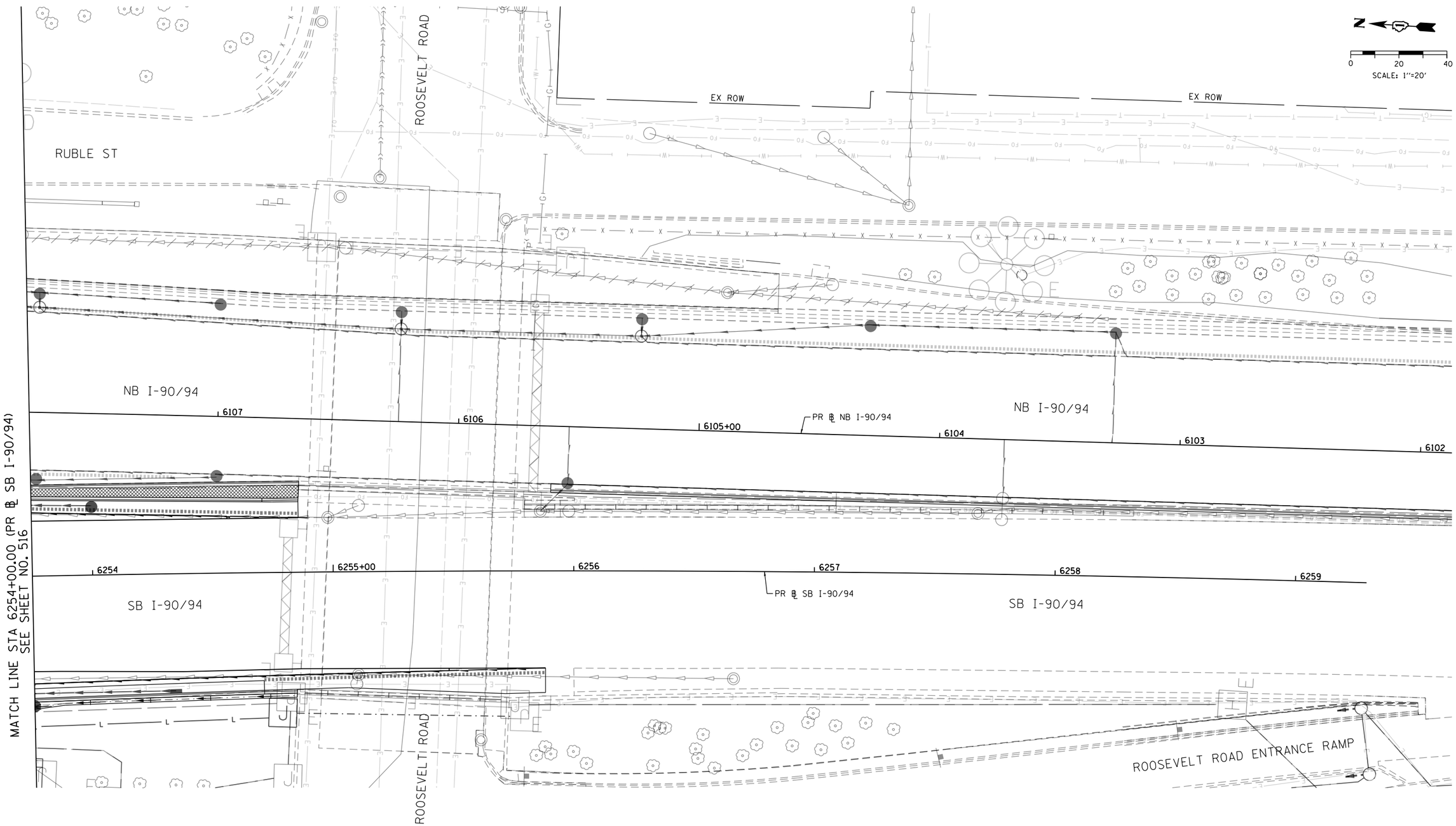

FILE PATH = pw:\\AECOM-NA-AWS1.aecomonline.local:AECOM_DS02_NA\Documents\01 Americas\Transportation\60269938 Circle\Phase_II\000.CAD\006.Roadway\Sheets\62A77 Contracts\D162A77-SHT-Drain-Subsurface-11.dgn

AECOM
303 EAST WACKER DRIVE, SUITE 1400
CHICAGO, IL 60601-5276
PHONE: (312) 373-7700 FAX: (312) 373-6800

D162A77-SHT-Drain-Subsurface-11.dgn	DESIGNED - AFC	REVISED -	
USER NAME = chiua	DRAWN - AFC	REVISED -	
PLOT SCALE = 40.0000 ' / in.	CHECKED - MJE	REVISED -	
PLOT DATE = 1/31/2020	DATE - 1/29/2019	REVISED -	

STATE OF ILLINOIS
DEPARTMENT OF TRANSPORTATION

PROPOSED SUBSURFACE DRAINAGE PLAN
SB I-90/94

SCALE: 1"=20' | SHEET 11 OF 11 SHEETS | STA. 6254+00.00 TO STA. 6259+29.52

F.A.I. RTE.	SECTION	COUNTY	TOTAL SHEETS	SHEET NO.
90/94/290	2015-018R	COOK	1360	517
		CONTRACT NO. 62A77		
		ILLINOIS FED. AID PROJECT		

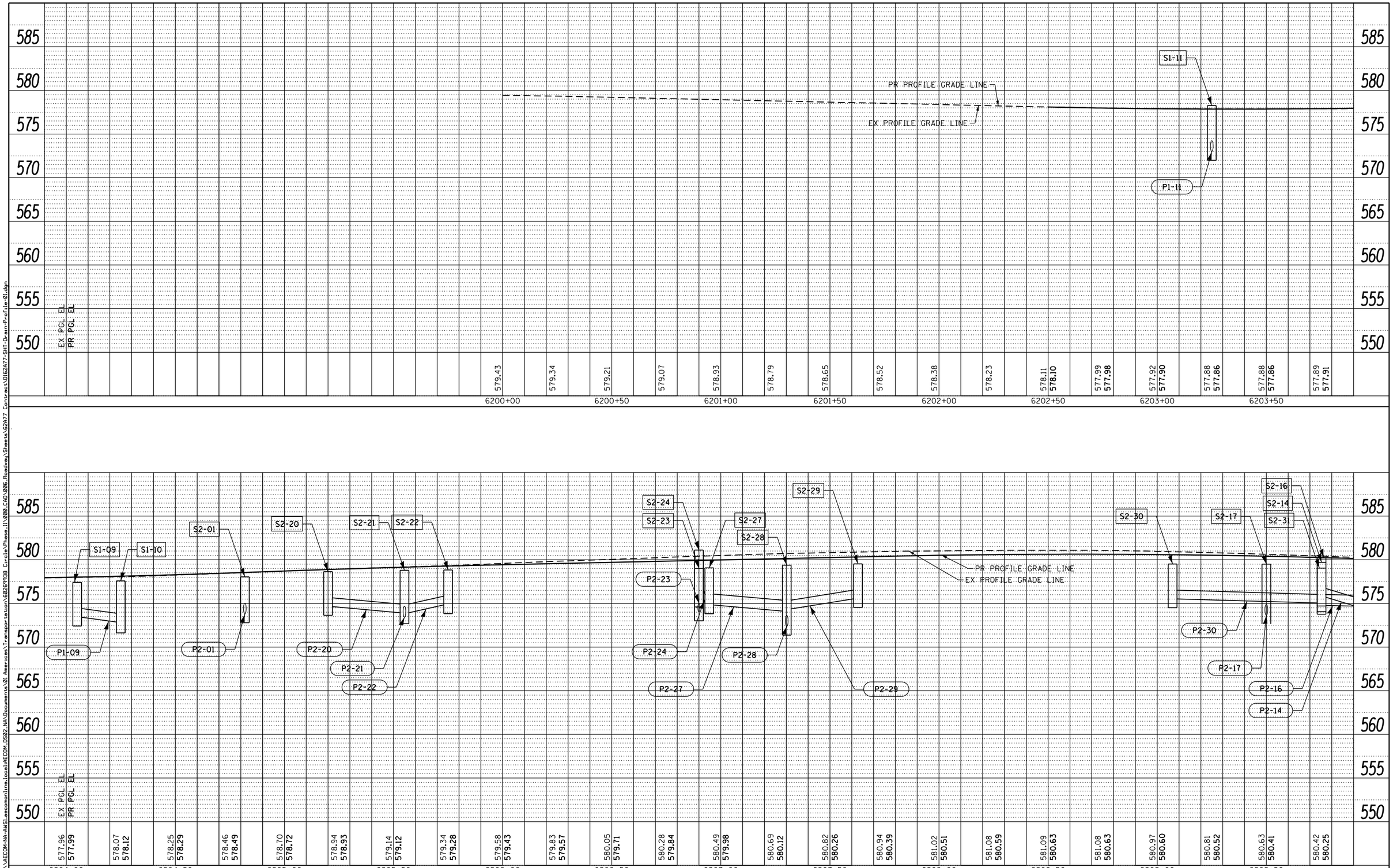

FILE PATH = pw:\\AECOM-NA-AWS\aecomonline.local\ECOM_DS02_NA\Documents\01 Americas\Transportation\60269938 Circle\Phase II\000.CAD\006.Roadway\Sheets\62A77 Contracts\D162A77-SHT-Drain-Profile-01.dgn

TranSystems

D162A77-SHT-Drain-Profile-01.dgn	DESIGNED - MRC	REVISED -	
USER NAME = chiua	DRAWN - MRC	REVISED -	
PLOT SCALE = 40.000000 ' / in.	CHECKED - JMG	REVISED -	
PLOT DATE = 1/31/2020	DATE - 1/29/2019	REVISED -	

STATE OF ILLINOIS
DEPARTMENT OF TRANSPORTATION

PROPOSED DRAINAGE AND UTILITIES PROFILE
SB I-90/94

SCALE: 1"=20' | SHEET 1 OF 10 SHEETS | STA. 6200+00.00 TO STA. 6209+90.00

F.A.I. RTE.	SECTION	COUNTY	TOTAL SHEETS	SHEET NO.
90/94/290	2015-018R	COOK	1360	518
		CONTRACT NO. 62A77		
		ILLINOIS FED. AID PROJECT		

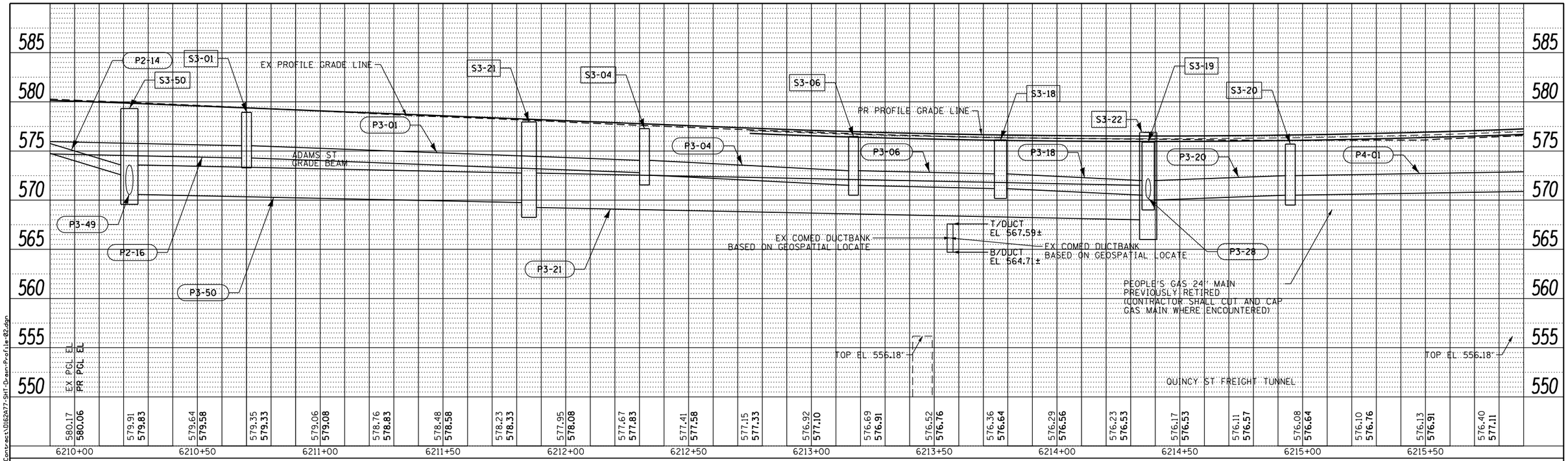

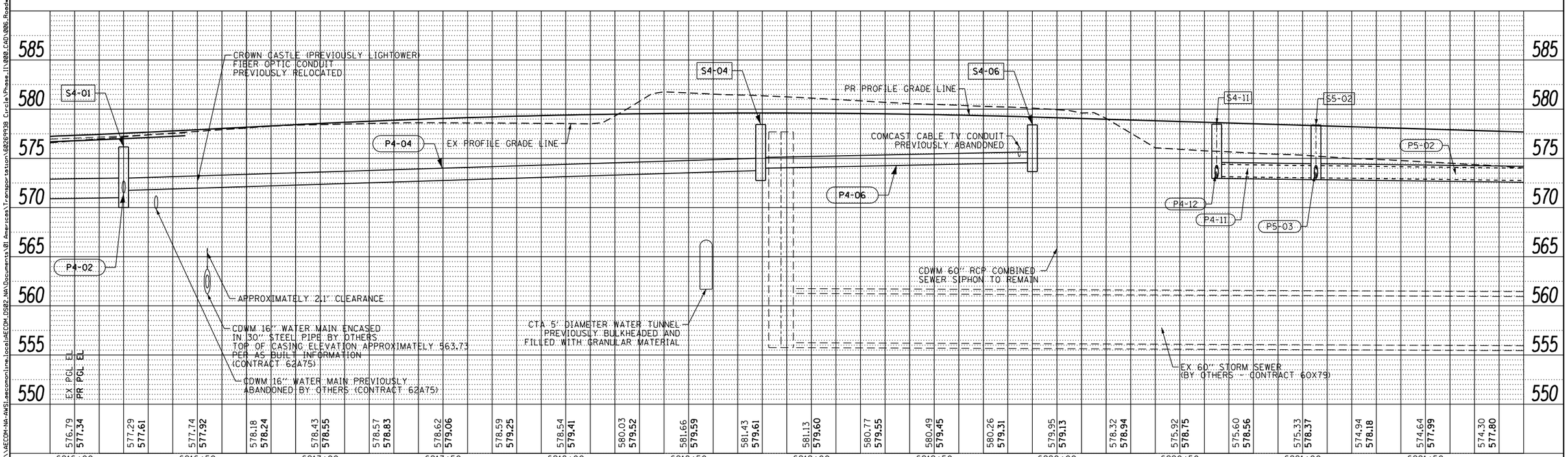

FILE PATH = put\AECOM-NA-AWS1aecomonline.local\AECOM_DS02_NA\Documents\01 Americas\Transportation\60269938 Circle\Phase II\000.CAD\006.Roadway\Sheets\62A77 Contracts\D162A77-SHT-Drain-Profile-02.dgn

AECOM . TranSystems

D162A77-SHT-Drain-Profile-02.dgn	DESIGNED - MRC/AFC	REVISED -	
USER NAME = chiua	DRAWN - MRC/AFC	REVISED -	
PLOT SCALE = 40.000000 ' / in.	CHECKED - JMG/MJE	REVISED -	
PLOT DATE = 1/31/2020	DATE - 1/29/2019	REVISED -	

STATE OF ILLINOIS
DEPARTMENT OF TRANSPORTATION

PROPOSED DRAINAGE AND UTILITIES PROFILE
SB I-90/94

SCALE: 1"=20' | SHEET 2 OF 10 SHEETS | STA. 6209+90.00 TO STA. 6221+90.00

F.A.I. RTE.	SECTION	COUNTY	TOTAL SHEETS	SHEET NO.
90/94/290	2015-018R	COOK	1360	519

CONTRACT NO. 62A77

ILLINOIS FED. AID PROJECT

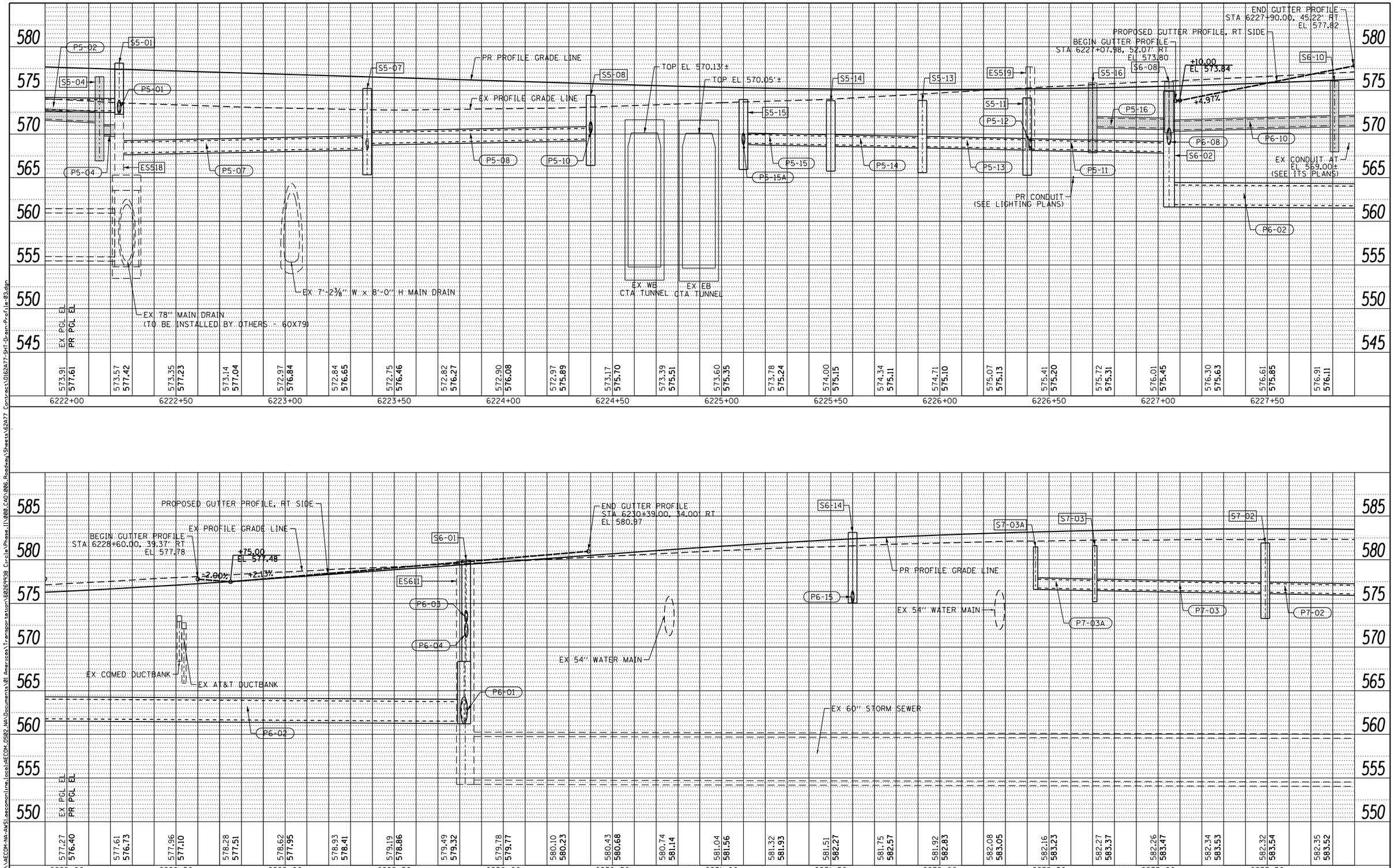

FILE PATH = pw:\\AECOM-NA-AWS\aecomonline.local\ECOM_DS02_NA\Documents\01 Americas\Transportation\60269938 Circle\Phase II\000.CAD\006.Roadway\Sheets\62A77 Contract\D162A77-SHT-Drain-Profile-03.dgn

AECOM
303 EAST WACKER DRIVE, SUITE 1400
CHICAGO, IL 60601-5276
PHONE: (312) 373-7700 FAX: (312) 373-6800

D162A77-SHT-Drain-Profile-03.dgn	DESIGNED - AFC	REVISED -	
USER NAME = ChiuA	DRAWN - AFC	REVISED -	
PLOT SCALE = 40.000000 ' / in.	CHECKED - MJE	REVISED -	
PLOT DATE = 3/9/2020	DATE - 3/4/2020	REVISED -	

STATE OF ILLINOIS
DEPARTMENT OF TRANSPORTATION

PROPOSED DRAINAGE AND UTILITIES PROFILE
SB I-90/94

SCALE: 1"=20' | SHEET 3 OF 10 SHEETS | STA. 6221+90.00 TO STA. 6233+90.00

F.A.I. RTE.	SECTION	COUNTY	TOTAL SHEETS	SHEET NO.
90/94/290	2015-018R	COOK	1360	520

CONTRACT NO. 62A77

ILLINOIS FED. AID PROJECT

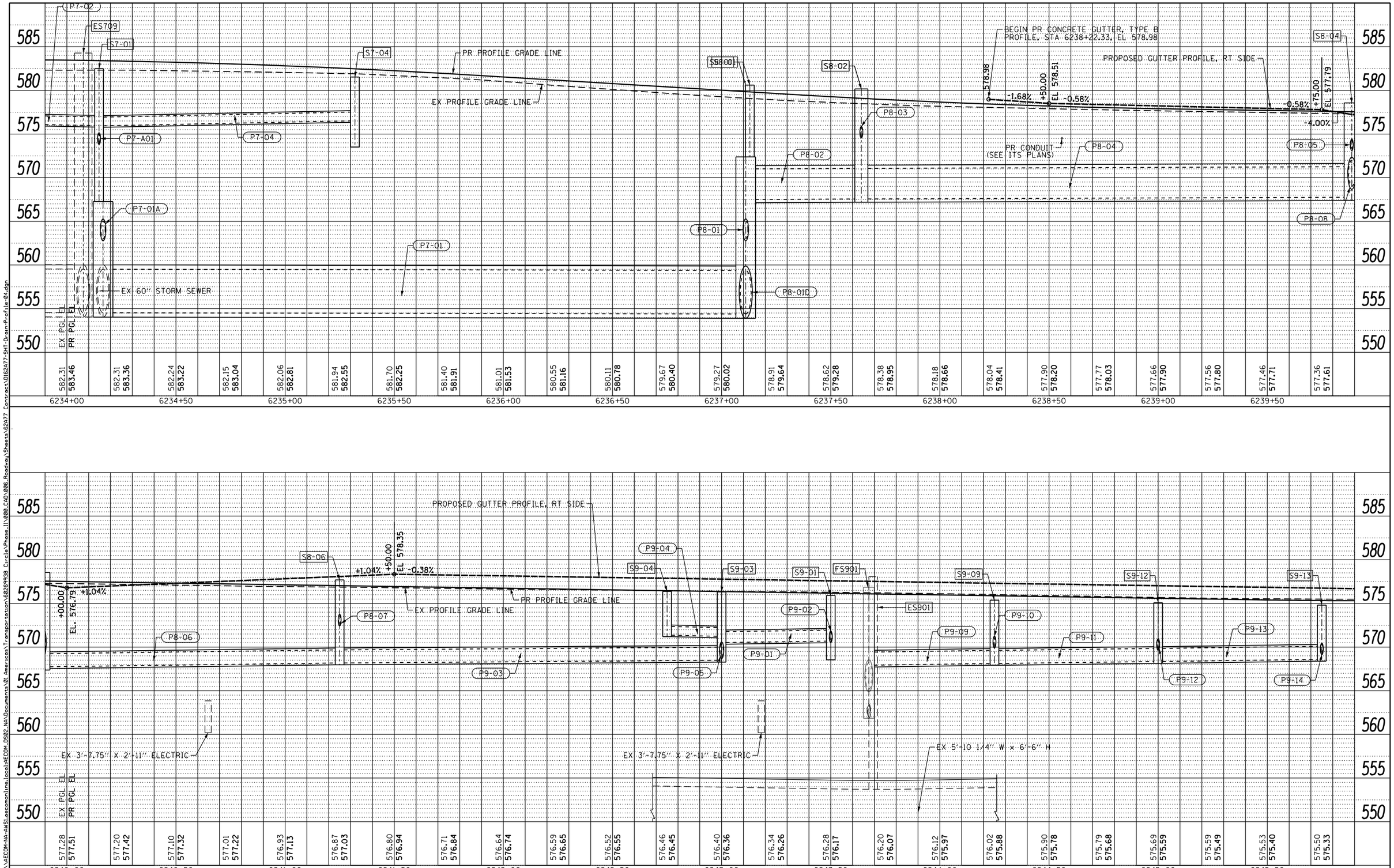

FILE PATH = put\AECOM-NA-AWS1aecomonline.local\AECOM_DS02_NA\Documents\01 Americas\Transportation\60269938 Circle\Phase II\000.CAD\006.Roadway\Sheets\62A77 Contracts\D162A77-SHT-Drain-Profile-04.dgn

AECOM
303 EAST WACKER DRIVE, SUITE 1400
CHICAGO, IL 60601-5276
PHONE: (312) 373-7700 FAX: (312) 373-6800

D162A77-SHT-Drain-Profile-04.dgn	DESIGNED - AFC	REVISED -	
USER NAME = chiua	DRAWN - AFC	REVISED -	
PLOT SCALE = 40.000000 ' / in.	CHECKED - MJE	REVISED -	
PLOT DATE = 1/31/2020	DATE - 1/29/2019	REVISED -	

STATE OF ILLINOIS
DEPARTMENT OF TRANSPORTATION

PROPOSED DRAINAGE AND UTILITIES PROFILE
SB I-90/94

SCALE: 1"=20' | SHEET 4 OF 10 SHEETS | STA. 6233+90.00 TO STA. 6245+90.00

F.A.I. RTE.	SECTION	COUNTY	TOTAL SHEETS	SHEET NO.
90/94/290	2015-018R	COOK	1360	521

CONTRACT NO. 62A77

ILLINOIS FED. AID PROJECT

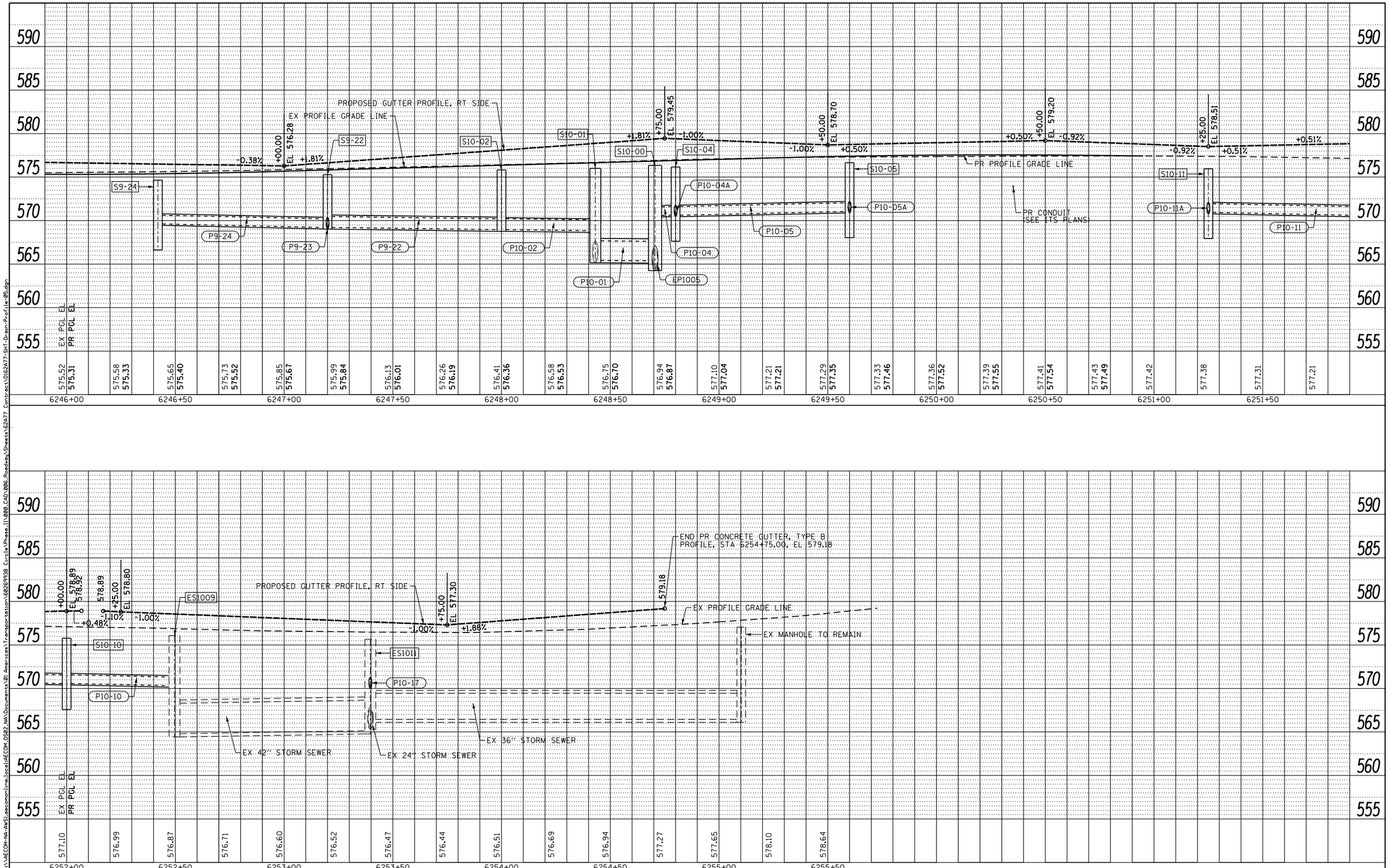

FILE PATH = put\AECOM-NA-AWS1aecomonline.local\ECOM_DS02_NA\Documents\01 Americas\Transportation\60269938 Circle\Phase II\000 CAD\006 Roadway\Sheets\62A77 Contract\D162A77-SHT-Drain-Profile-05.dgn

AECOM
303 EAST WACKER DRIVE, SUITE 1400
CHICAGO, IL 60601-5276
PHONE: (312) 373-7700 FAX: (312) 373-6800

D162A77-SHT-Drain-Profile-05.dgn	DESIGNED - AFC	REVISED -	
USER NAME = chiua	DRAWN - AFC	REVISED -	
PLOT SCALE = 40.000000 ' / in.	CHECKED - MJE	REVISED -	
PLOT DATE = 1/31/2020	DATE - 1/29/2019	REVISED -	

STATE OF ILLINOIS
DEPARTMENT OF TRANSPORTATION

PROPOSED DRAINAGE AND UTILITIES PROFILE
SB I-90/94

SCALE: 1"=20' | SHEET 5 OF 10 SHEETS | STA. 6245+90.00 TO STA. 6255+72.78

F.A.I. RTE.	SECTION	COUNTY	TOTAL SHEETS	SHEET NO.
90/94/290	2015-018R	COOK	1360	522

CONTRACT NO. 62A77

ILLINOIS FED. AID PROJECT

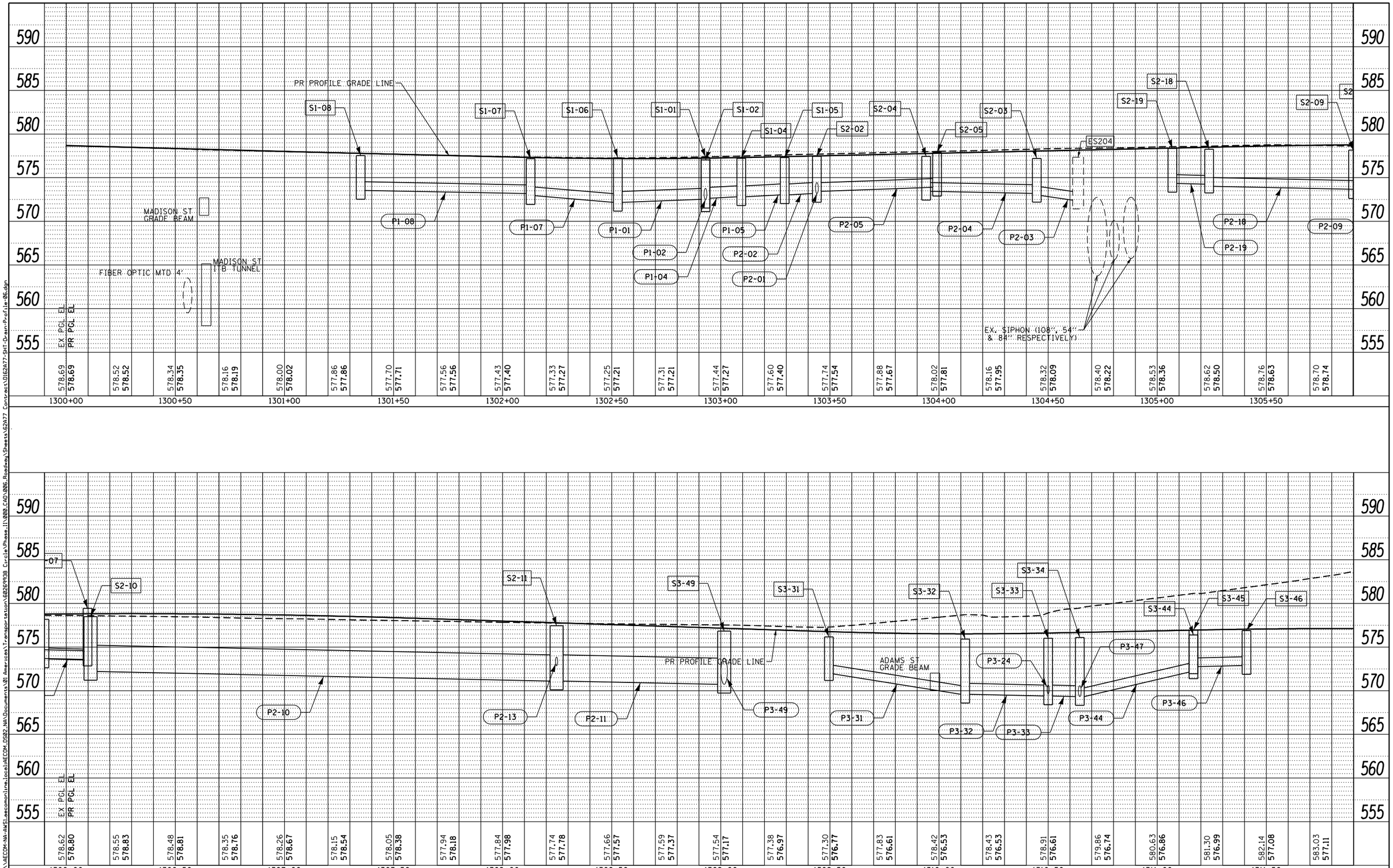

FILE PATH = put\AECOM-NA-AWS\aecomonline.local\AECOM_DS02_NA\Documents\01 Americas\Transportation\60269938 Circle\Phase II\002.CAD\006.Roadway\Sheets\62A77 Contracts\D162A77-SHT-Drain-Profile-06.dgn

TranSystems

D162A77-SHT-Drain-Profile-06.dgn	DESIGNED - MRC	REVISED -	
USER NAME = chiua	DRAWN - MRC	REVISED -	
PLOT SCALE = 40.000000 ' / in.	CHECKED - JMG	REVISED -	
PLOT DATE = 1/31/2020	DATE - 1/29/2019	REVISED -	

STATE OF ILLINOIS
DEPARTMENT OF TRANSPORTATION

PROPOSED DRAINAGE AND UTILTIES PROFILE
RAMP SW

SCALE: 1"=20' | SHEET 6 OF 10 SHEETS | STA. 1300+00.00 TO STA. 1311+90.00

F.A.I. RTE.	SECTION	COUNTY	TOTAL SHEETS	SHEET NO.
90/94/290	2015-018R	COOK	1360	523
		CONTRACT NO. 62A77		
		ILLINOIS FED. AID PROJECT		

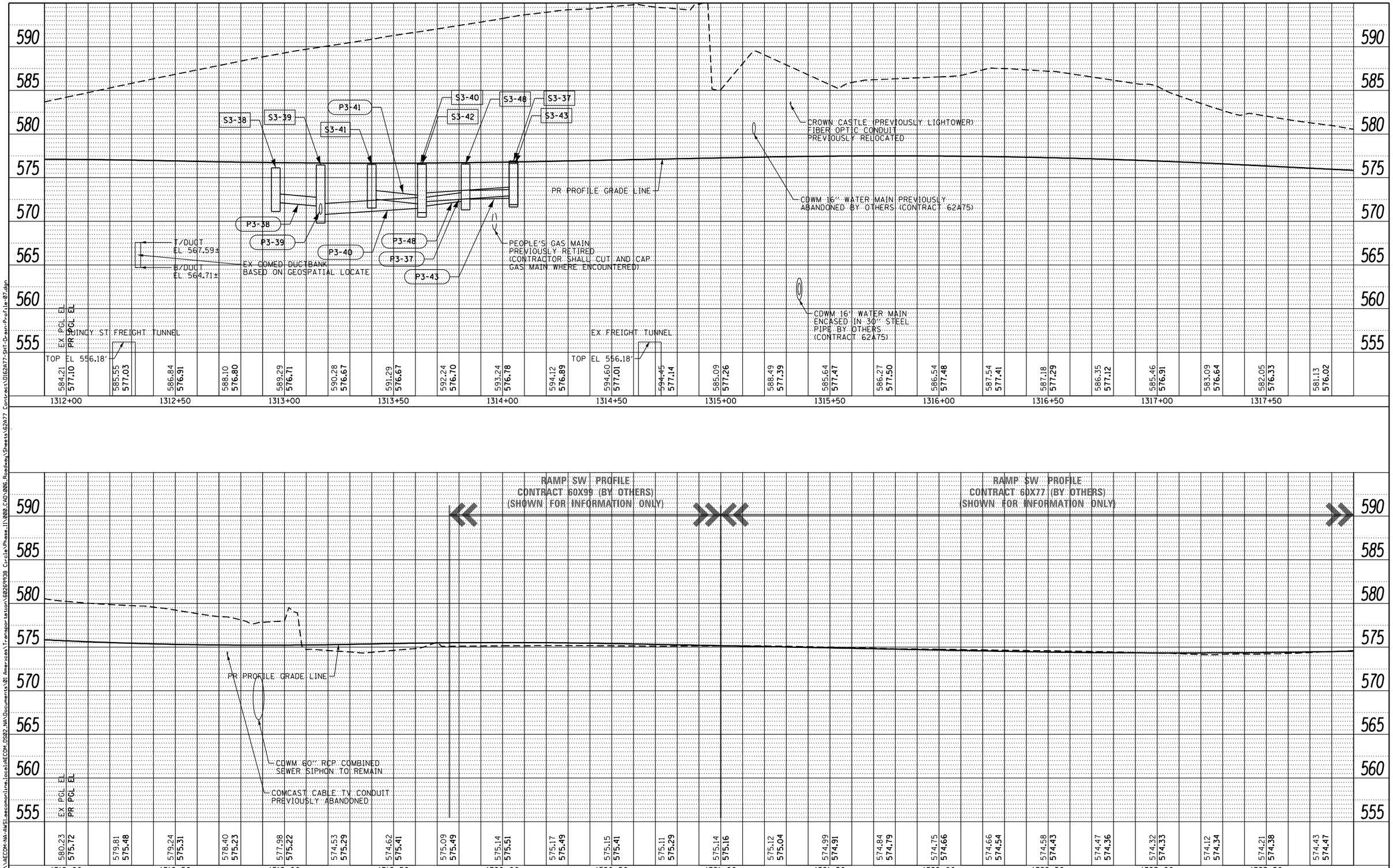

FILE PATH = put\AECOM-NA-AWS\aecomonline.local\AECOM_DS02_NA\Documents\01 Americas\Transportation\60269938 Circle\Phase II\000 CAD\006 Roadway\Sheets\62A77 Contract\D162A77-SHT-Drain-Profile-07.dgn

TranSystems

D162A77-SHT-Drain-Profile-07.dgn	DESIGNED - MRC	REVISED -	
USER NAME = chiua	DRAWN - MRC	REVISED -	
PLOT SCALE = 40.000000 ' / in.	CHECKED - JMG	REVISED -	
PLOT DATE = 1/31/2020	DATE - 1/29/2019	REVISED -	

STATE OF ILLINOIS
DEPARTMENT OF TRANSPORTATION

PROPOSED DRAINAGE AND UTILITIES PROFILE
RAMP SW

SCALE: 1"=20' | SHEET 7 OF 10 SHEETS | STA. 1311+90.00 TO STA. 1323+90.00

F.A.I. RTE.	SECTION	COUNTY	TOTAL SHEETS	SHEET NO.
90/94/290	2015-018R	COOK	1360	524

CONTRACT NO. 62A77

ILLINOIS FED. AID PROJECT

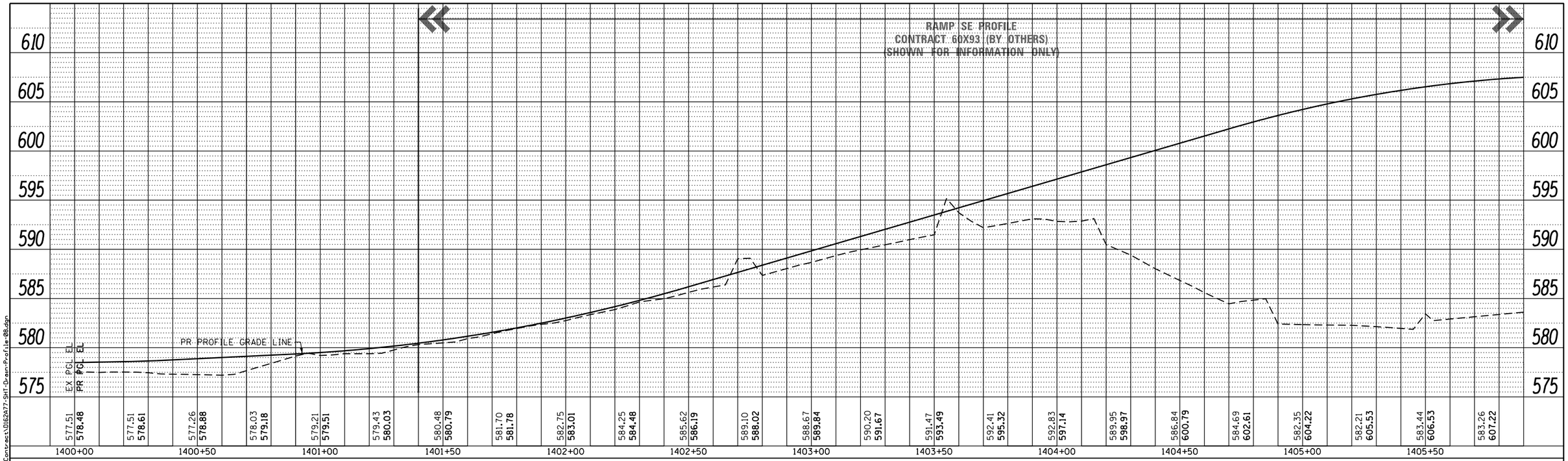

RAMP SE (TOP)

SB TAYLOR EXIT RAMP (BOTTOM)

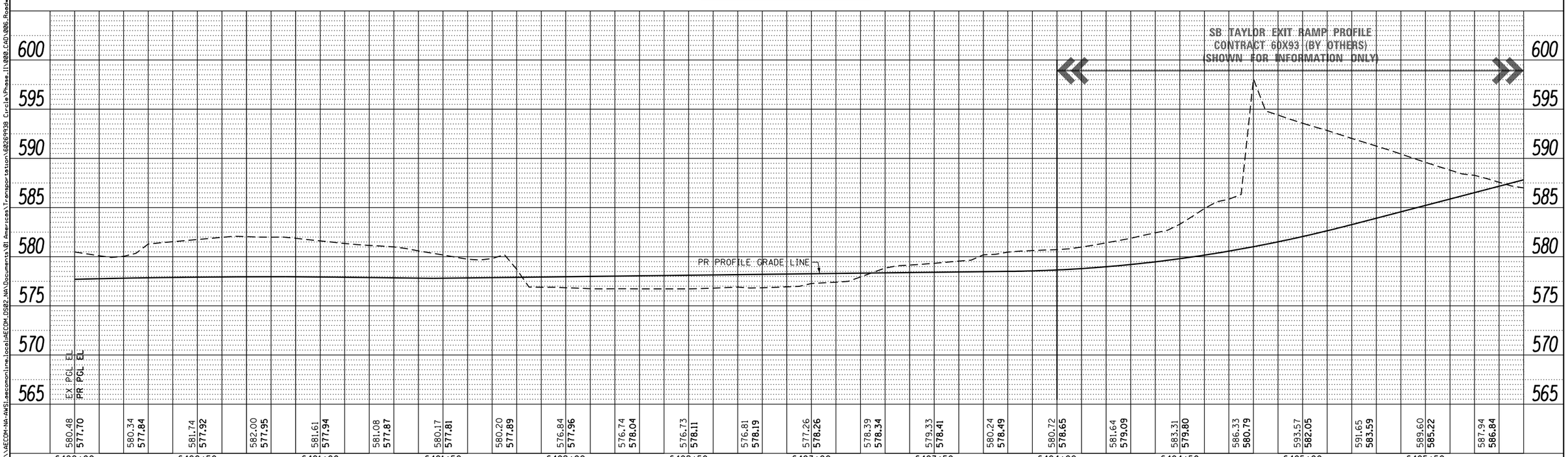

FILE PATH = pw:\\AECOM-NA-AWS\aecomonline.local\AECOM_DS02_NA\Documents\01 Americas\Transportation\60269938 Circle\Phase II\000 CAD\006 Roadway\Sheets\62A77 Contracts\D162A77-SHT-Drain-Profile-08.dgn

TranSystems

D162A77-SHT-Drain-Profile-08.dgn	DESIGNED - MRC	REVISED -	
USER NAME = chiua	DRAWN - MRC	REVISED -	
PLOT SCALE = 40.000000 ' / in.	CHECKED - JMG	REVISED -	
PLOT DATE = 1/31/2020	DATE - 1/29/2019	REVISED -	

STATE OF ILLINOIS
DEPARTMENT OF TRANSPORTATION

PROPOSED DRAINAGE AND UTILITIES PROFILE
RAMP SE AND SB TAYLOR EXIT RAMP

SCALE: 1"=20' | SHEET 8 OF 10 SHEETS | STA. TO STA.

F.A.I. RTE.	SECTION	COUNTY	TOTAL SHEETS	SHEET NO.
90/94/290	2015-018R	COOK	1360	525
		CONTRACT NO. 62A77		
		ILLINOIS FED. AID PROJECT		

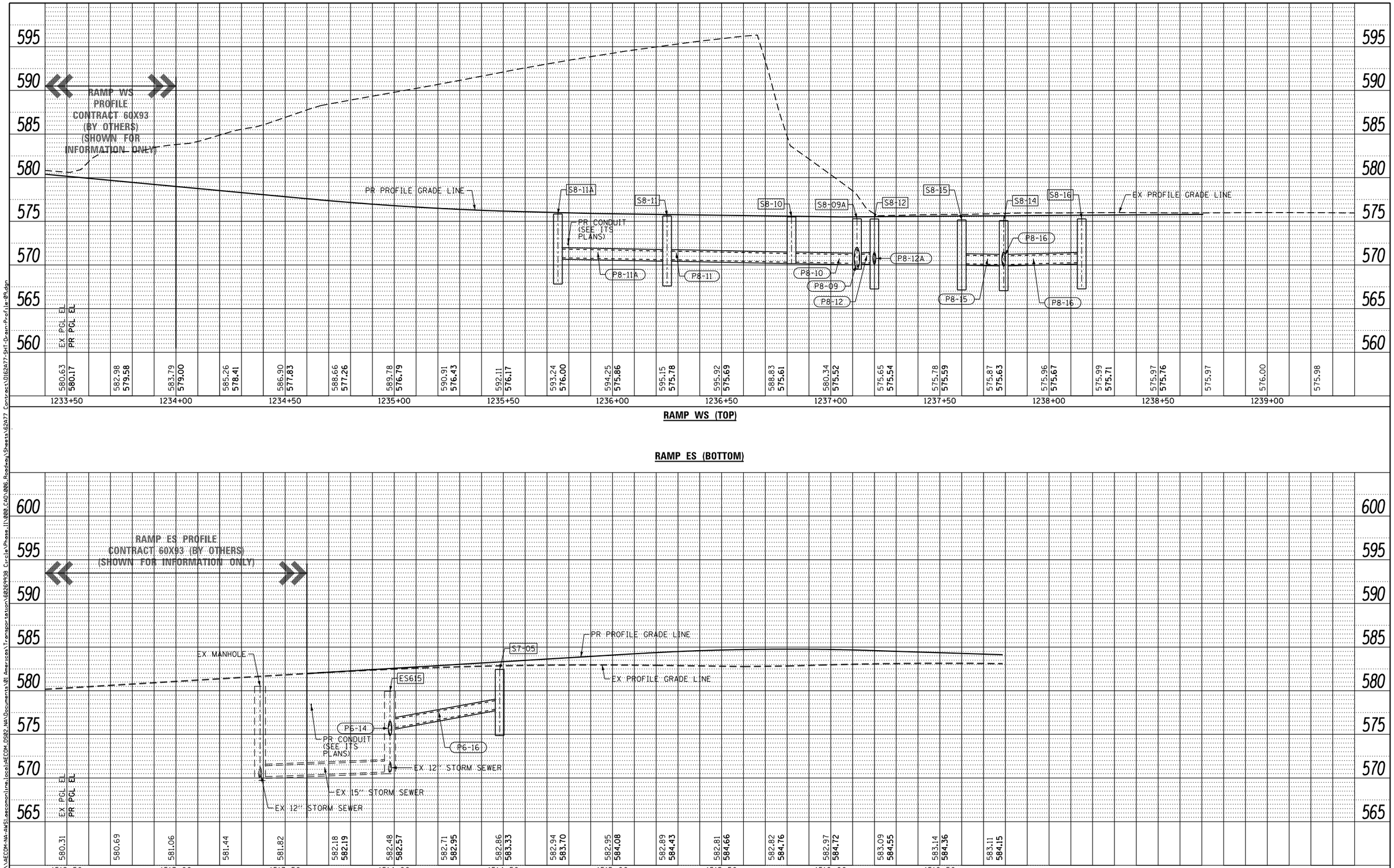

FILE PATH = pw:\\AECOM-NA-AWS1.aecomonline.local:AECOM_DS02_NA\Documents\01 Americas\Transportation\60269938 Circle\Phase II\000 CAD\006 Roadway\Sheets\62A77 Contract\D162A77-SHT-Drain-Profile-09.dgn

AECOM
303 EAST WACKER DRIVE, SUITE 1400
CHICAGO, IL 60601-5276
PHONE: (312) 373-7700 FAX: (312) 373-6800

D162A77-SHT-Drain-Profile-09.dgn	DESIGNED - AFC	REVISED -	
USER NAME = chiua	DRAWN - AFC	REVISED -	
PLOT SCALE = 40.000000 ' / in.	CHECKED - MJE	REVISED -	
PLOT DATE = 1/31/2020	DATE - 1/29/2019	REVISED -	

STATE OF ILLINOIS
DEPARTMENT OF TRANSPORTATION

PROPOSED DRAINAGE AND UTILITIES PROFILE
RAMP WS AND RAMP ES

SCALE: 1"=20' | SHEET 9 OF 10 SHEETS | STA. TO STA.

F.A.I. RTE.	SECTION	COUNTY	TOTAL SHEETS	SHEET NO.
90/94/290	2015-018R	COOK	1360	526
		CONTRACT NO. 62A77		
		ILLINOIS FED. AID PROJECT		

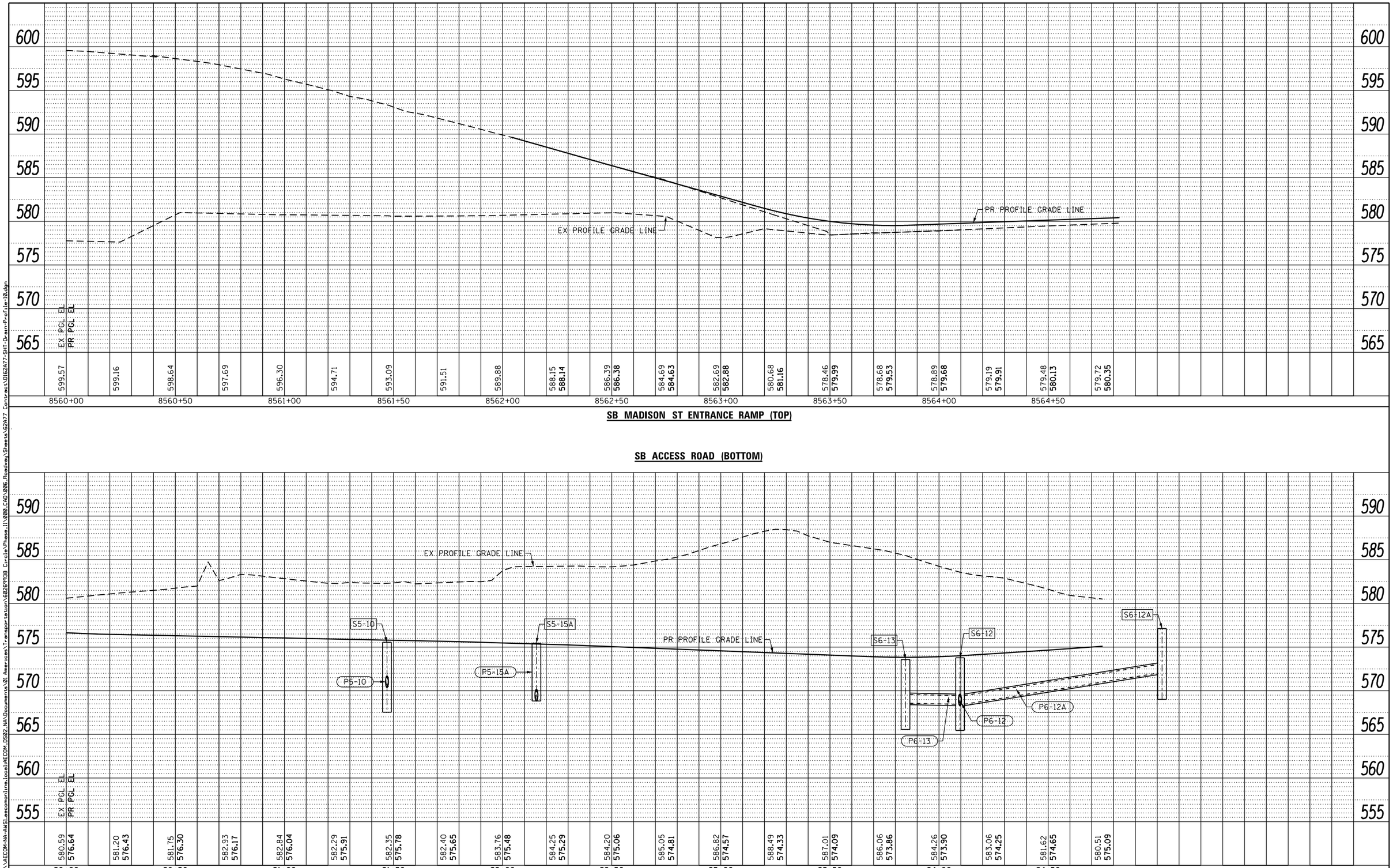

FILE PATH = pw:\\AECOM-NA-AWS1.aecomonline.local:AECOM_DS02_NA\Documents\01 Americas\Transportation\60269938 Circle\Phase II\000 CAD\006 Roadway\Sheets\62A77 Contract\D162A77-SHT-Drain-Profile-10.dgn

AECOM . TranSystems

D162A77-SHT-Drain-Profile-10.dgn	DESIGNED - MRC/AFC	REVISED -	
USER NAME = chiua	DRAWN - MRC/AFC	REVISED -	
PLOT SCALE = 40.000000 ' / in.	CHECKED - JMG/MJE	REVISED -	
PLOT DATE = 1/31/2020	DATE - 1/29/2019	REVISED -	

STATE OF ILLINOIS
DEPARTMENT OF TRANSPORTATION

PROPOSED DRAINAGE AND UTILITIES PROFILE
SB MADISON ENTRANCE RAMP AND SB ACCESS RD

SCALE: 1"=20' | SHEET 10 OF 10 SHEETS | STA. TO STA.

F.A.I. RTE.	SECTION	COUNTY	TOTAL SHEETS	SHEET NO.
90/94/290	2015-018R	COOK	1360	527

CONTRACT NO. 62A77

ILLINOIS FED. AID PROJECT

DETENTION STORAGE TANK GENERAL NOTES

1) UNLESS ALLOWED BY THE ENGINEER, NO MATERIALS SHALL BE STORED, OR EQUIPMENT STAGED, WITHIN THE AIS UNTIL THE AIS IS CLOSED TO THE PUBLIC. THE AIS WILL BE CLOSED TO THE PUBLIC, INCLUDING USE BY IDOT EMERGENCY TRAFFIC PATROL, ILLINOIS STATE POLICE, CITY OF CHICAGO FIRST RESPONDERS AND OTHERS IN CONFORMANCE WITH PORTIONS OF THE AVAILABLE WORK AREAS AND SEQUENCING REQUIREMENTS SPECIAL PROVISION.

2) THE EXISTING BARRIER WALL ALONG WESTBOUND (NB) I-90/94 WILL NOT BE REMOVED UNDER CONTRACT 62A76 UNTIL SUCH TIME THAT THE CONTRACTOR UNDER CONTRACT 60X93 HAS SUCCESSFULLY TRANSFERRED COMMUNICATION INFRASTRUCTURE SO THAT EXISTING CABLES CAN BE REMOVED UNDER CONTRACT 62A76.

3) THE WORK ZONE UNDER CONTRACT 62A76 THAT WILL REMOVE THE EXISTING BARRIER WALL ALONG WESTBOUND (NB) I-90/94 WILL NOT BE AVAILABLE UNTIL STAGE 0B AS SHOWN IN THE CONTRACT 62A76 PLANS AND SHOWN AS THE PRE-STAGE OF CONTRACT 62A77.

4) NO SPECIFIC ACCESS PLAN FOR VEHICLES OR EQUIPMENT HAS BEEN DEFINED. THE CONTRACTOR SHALL DEVELOP AN ACCESS PLAN THAT CONSIDERS THE PROPOSED SCOPE OF WORK AND AVAILABLE WORK ZONES. AS NOTED IN THE AVAILABLE WORK AREAS AND SEQUENCING REQUIREMENTS SPECIAL PROVISION, THE CONTRACTOR SHALL BE ALLOWED TO UTILIZE PORTIONS OF THE CONTRACT 62A76 WORK ZONE FOR CERTAIN PERIODS OF TIME - INCLUDING THE AREA IN THE IMMEDIATE AREA AROUND THE AIS.

5) THE EAST SUPPORT FOR PROPOSED OVERHEAD SIGN STRUCTURE SB-14 WILL BE CONSTRUCTED WITHIN THE FOOTPRINT OF THE AIS AND THE SOIL RETENTION SYSTEM. THE CONTRACTOR SHALL CONSIDER THE APPROPRIATE TIME PERIOD FOR THE CONSTRUCTION OF THE DRILLED SHAFT FOUNDATIONS AND CONSIDER THE INTERACTION BETWEEN THE FOUNDATIONS AND THE VARIOUS ITEMS TO BE INSTALLED WITHIN THE EXCAVATION.

6) THE LIMITS OF SOIL RETENTION SYSTEM NOTED ON THE PLANS HAVE BEEN ESTABLISHED USING A CONSERVATIVE LAYOUT OF PRECAST MODULES. DIMENSIONS IDENTIFYING THE EXTENTS OF THE SOIL RETENTION SYSTEM SHALL BE USED FOR BIDDING PURPOSES ONLY. THE ACTUAL SOIL RETENTION SYSTEM DESIGN SHALL BE REFINED BASED UPON THE CONTRACTOR'S MEANS AND METHODS, DESIGN PARAMETERS AND THE FINAL PROPOSED LAYOUT OF THE PRECAST MODULES.

7) THERE ARE VARIOUS STORM SEWER PIPES AND STRUCTURES THAT MUST REMAIN IN SERVICE IN THE AREA AROUND THE AIS DURING A MAJORITY OF THE SOIL RETENTION SYSTEM INSTALLATION, EXCAVATION, SEWER AND PRECAST MODULE INSTALLATION AND BACKFILLING OF THE EXCAVATION. AS SHOWN ON THE EXISTING DRAINAGE AND UTILITIES PLAN, THE FOLLOWING SHALL BE MAINTAINED:

   a. STORM SEWERS R702, R702A, R702B AND R703 SHALL REMAIN IN SERVICE UNTIL PROPOSED STORM SEWERS HAVE BEEN CONSTRUCTED THAT CONNECT TO THE PROPOSED 60" STORM SEWER CONSTRUCTED WITHIN THE SOIL RETENTION SYSTEM. IF THE CONSTRUCTION OF THE SOIL RETENTION SYSTEM WILL DAMAGE OR FORCE THE REMOVAL OF THE ABOVE STORM SEWER PIPES AND THE ASSOCIATED ES702 AND ES702A DRAINAGE STRUCTURES, THEN THE CONTRACTOR SHALL PROVIDE TEMPORARY DRAINAGE CONNECTIONS TO ROUTE STORM WATER TO MANHOLE ES701.
   b. EP709, R708A, ES708 AND R708 SHALL REMAIN IN OPERATION UNTIL SUCH TIME THAT S7-01, P7-01, S8-01, P8-01D, S8-01A, P8-01A AND JUNCTION CHAMBER NO. 1 HAVE BEEN INSTALLED AND CAN ACCEPT STORM WATER FLOWS. R708A SHALL BE REMOVED DURING A LOW FLOW PERIOD WHEN PRECIPITATION IS NOT EXPECTED AND S7-01 CAN BE FULLY CONNECTED. THE CONTRACTOR MAY NEED TO TEMPORARILY PUMP STORM WATER AS NEEDED.
   c. IF THE CONTRACTOR ELECTS TO REMOVE ES708 FOR ANY AMOUNT OF TIME, TEMPORARY PUMPING SHALL BE REQUIRED. THERE IS NO OPPORTUNITY TO REMOVE STORM WATER FROM THE NEXT UPSTREAM MANHOLE. TEMPORARY PUMPING SHALL CONSIDER THAT EP709 IS FLOWING FULL AND THAT STORM WATER WILL NEED TO BE PUMPED TO A DRAINAGE STRUCTURE DIRECTLY CONNECTED TO THE EXISTING MAIN DRAIN. NO ADDITIONAL COMPENSATION WILL BE MADE FOR TEMPORARY PUMPING OR FOR DELAYS OR DAMAGE TO THE WORK ZONE RESULTING FROM INSUFFICIENT PUMPING.
   d. THE EXISTING MAIN DRAIN SEWER SHALL BE PROTECTED THROUGHOUT CONSTRUCTION. THE INSTALLATION OF THE SOIL RETENTION SYSTEM, EXCAVATION AND CONSTRUCTION OF JUNCTION CHAMBER NO. 1 SHALL BE PERFORMED TO MINIMIZE THE IMPACTS TO THE MAIN DRAIN SEWER STRUCTURE OUTSIDE THE REMOVAL LIMITS. STORM WATER FLOWS SHALL BE MAINTAINED AT ALL TIMES. NO REDUCTIONS IN FLOW CAPACITY SHALL BE MADE WITHIN THE MAIN DRAIN SEWER UNLESS APPROVED BY THE ENGINEER IN WRITING.

DETENTION STORAGE TANK STAGING NARRATIVE

1) MAINTAIN EXISTING LIGHT TOWERS 8 DEF1 AND 8 DEF 2 AND ASSOCIATED CABLES/CONDUITS UNTIL PROPOSED LIGHT TOWER 8 DEF1 AND ASSOCIATED PERMANENT POWER FEED FROM IDOT LIGHTING CONTROLLER D ROUTED UNDER EXISTING NB I-90/94 TO 8 DEF1 HAS BEEN INSTALLED AND ENERGIZED AND TEMPORARY LIGHTING UNTIL 2 CAB3 HAS BEEN INSTALLED AND ENERGIZED. REMOVE EXISTING LIGHT TOWER 8 DEF1 WHEN FEASIBLE.

2) PERFORM VARIOUS PAVEMENT AND CONCRETE BARRIER WALL REMOVALS.

3) INSTALL VARIOUS COMPONENTS OF THE SOIL RETENTION SYSTEM COMPONENTS FROM THE EXISTING GRADE OF THE AIS AND SOUTHBOUND I-90/94. PROTECT EXISTING SEWERS AS NOTED IN THE DETENTION STORAGE TANK GENERAL NOTES.

4) BEGIN EXCAVATION WITHIN THE SOIL RETENTION SYSTEM. INSTALL BRACING AND SUPPORT COMPONENTS INCLUDED IN THE CONTRACTOR DESIGNED SOIL RETENTION SYSTEM. CONTINUE EXCAVATION AND SUPPORT INSTALLATION DOWN TO THE BOTTOM OF THE EXCAVATION.

5) GRADE THE BOTTOM OF THE EXPOSED EXCAVATION AND INSTALL 15" CONCRETE SLAB.

6) INSTALL PROPOSED 60" STORM SEWER PIPES P7-01 (PORTION), P8-01D AND P8-01A AND MANHOLES S8-01 AND S8-01A WITHIN EXCAVATED AREA. THE STORM SEWERS SHALL BE FULLY SUPPORTED WITH EITHER A CONCRETE CRADLE TIED TO THE CONCRETE SLAB OR WELL COMPACTED AGGREGATE MATERIAL.

7) WHILE CONTINUING TO SUPPORT EP709, R708A, R708 AND ES708, CONTINUE EXCAVATION AND CONCRETE SLAB CONSTRUCTION TO THE NORTH.

8) CONSTRUCT JUNCTION CHAMBER NO. 1 AND PROVIDE TEMPORARY BULKHEAD WITHIN P8-01A TO AVOID ALLOWING THE MAIN DRAIN SEWER TO BACK UP INTO THE PROPOSED STORM SEWERS AND EXCAVATION.

9) REMOVE R708A AND INSTALL S7-01 AND REMAINING PORTION OF P7-01. ONCE ALL STORM SEWER SEGMENTS ARE INSTALLED AND SUPPORTED, REMOVE REMAINING TEMPORARY BULKHEADS.

10) BACKFILL JUNCTION CHAMBER NO. 1, INCLUDING THE INSTALLATION OF ADDITIONAL SOIL RETENTION SYSTEM COMPONENTS TO BACKFILL TO THE PROPOSED SUBGRADE ELEVATION. INSTALL STORM SEWER P7-06

11) REMOVE REMAINING STORM SEWERS AND FULLY EXCAVATE THE SOIL RETENTION SYSTEM.

12) CONSTRUCT OHSS SB-14 EAST SUPPORT DRILLED SHAFTS AND CONTINUE DRILLED SHAFT COLUMNS TO PROPOSED GROUND LEVEL.

13) INSTALL PRECAST MODULES AND OUTLET 24" CONNECTING STORM SEWER.

14) BACKFILL THE EXCAVATION IN CONFORMANCE WITH PRECAST MODULE MANUFACTURER RECOMMENDATIONS AND REQUIREMENTS. INSTALL OVERFLOW 24" CONNECTING STORM SEWERS.

15) CONTINUE BACKFILLING TO THE PROPOSED SUBGRADE ELEVATIONS. INSTALL VARIOUS STORM SEWERS ROUTED TO MANHOLES S7-01, S8-01 AND S8-01A. INSTALL ALL SURFACE DRAINAGE COMPONENTS WITHIN THE PROPOSED AIS.

16) CUT OFF ANY SOIL RETENTION SYSTEM COMPONENT WITHIN ONE (1) FOOT OF THE PROPOSED AGGREGATE SUBGRADE IMPROVEMENT.

17) CONSTRUCT VARIOUS PAVEMENTS AND CONCRETE BARRIER WALLS, INCLUDING UNDERDRAIN SYSTEMS.

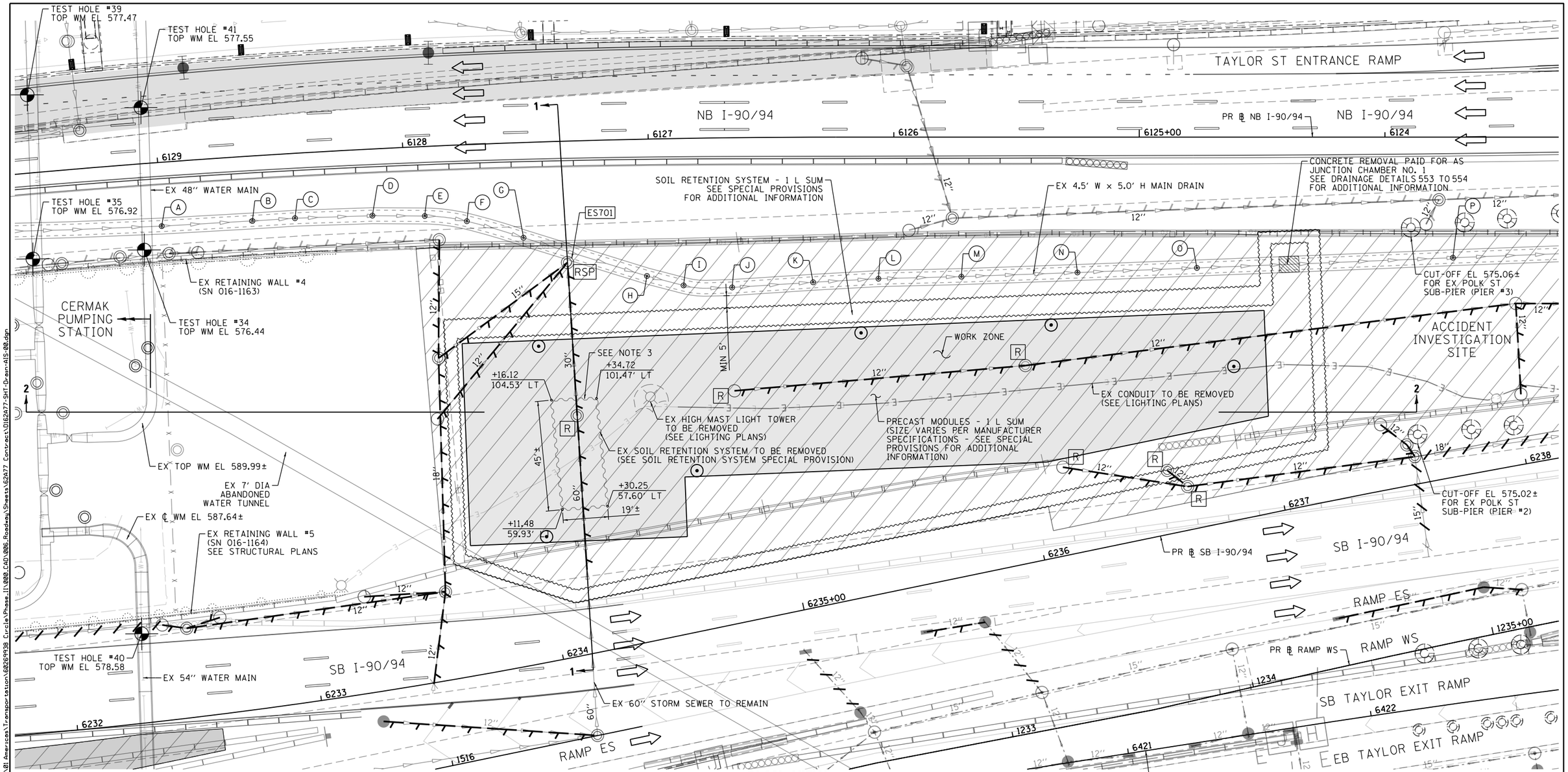

PLAN VIEW

STAGES 1A TO 1D

EXISTING MAIN DRAIN ALIGNMENT				
POINT	NORTHING	EASTING	BOTTOM OF INSIDE MAIN DRAIN ELEVATION	TOP OF EX ROADWAY ELEVATION
			(FT)	(FT)
A	1897221.4182	1171742.5739	553.75± (EX)	581.92
B	1897184.4935	1171744.4529	553.50± (EX)	582.09
C	1897167.1451	1171745.4682	553.47± (EX)	582.15
D	1897135.6177	1171746.3256	553.30± (EX)	582.25
E	1897114.3095	1171746.0605	553.25± (EX)	582.28
F	1897097.1840	1171743.8446	553.11± (EX)	582.20

EXISTING MAIN DRAIN ALIGNMENT				
POINT	NORTHING	EASTING	BOTTOM OF INSIDE MAIN DRAIN ELEVATION	TOP OF EX ROADWAY ELEVATION
			(FT)	(FT)
G	1897074.1446	1171736.9716	552.97± (EX)	581.84
H	1897023.9993	1171721.1271	552.76± (EX)	581.39
I	1897009.1047	1171717.1958	552.71± (EX)	581.18
J	1896989.3031	1171716.2587	552.51± (EX)	580.96
K	1896956.3393	1171718.1911	552.42± (EX)	580.72
L	1896929.7342	1171719.5044	552.46± (EX)	580.46

EXISTING MAIN DRAIN ALIGNMENT				
POINT	NORTHING	EASTING	BOTTOM OF INSIDE MAIN DRAIN ELEVATION	TOP OF EX ROADWAY ELEVATION
			(FT)	(FT)
M	1896895.9396	1171720.1553	551.95± (EX)	580.07
N	1896848.6915	1171721.5620	551.64± (EX)	579.46
O	1896800.0335	1171723.1386	551.33± (EX)	578.81
P	1896695.8168	1171726.7253	550.84± (EX)	577.33

0 20 40
SCALE: 1"=20'

NOTES

1. SEE SHEET NO. 491 TO 492 FOR INFORMATION ON EXISTING STRUCTURE AND STORM SEWER REMOVALS.
2. ALL STATIONING AND OFFSETS ARE BASED ON PR ℄ SB I-90/94 UNLESS OTHERWISE NOTED.
3. THE ABANDONED EXISTING SOIL RETENTION SYSTEM IS CUT-OFF AT APPROXIMATE ELEVATIONS 580.30'± TO 580.86± BASED ON RECORD INFORMATION. NO LATERIAL BRACING OR WALERS ARE UNDERSTOOD TO REMAIN.

FILE PATH = pw:\\AECOM-NA-AWS\eecomonline.local\AECOM_DS02_NA\Documents\01 Americas\Transportation\60269938 Circle\Phase_II\000.CAD\006.Roadway\Sheets\62A77 Contracts\D162A77-SHT-Drain-AIS-00.dgn

AECOM
303 EAST WACKER DRIVE, SUITE 1400
CHICAGO, IL 60601-5276
PHONE: (312) 373-7700 FAX: (312) 373-6800

D162A77-SHT-Drain-AIS-00.dgn	DESIGNED - MSC	REVISED -	
USER NAME = ChiuA	DRAWN - AFC	REVISED -	
PLOT SCALE = 40.0000 ' / in.	CHECKED - MJE	REVISED -	
PLOT DATE = 3/4/2020	DATE - 3/4/2020	REVISED -	

STATE OF ILLINOIS
DEPARTMENT OF TRANSPORTATION

ACCIDENT INVESTIGATION SITE – EXISTING CONDITIONS
DETENTION STORAGE TANK

SCALE: 1"=20' | SHEET 2 OF 7 SHEETS | STA. TO STA.

F.A.I. RTE.	SECTION	COUNTY	TOTAL SHEETS	SHEET NO.
90/94/290	2015-018R	COOK	1360	529

CONTRACT NO. 62A77

ILLINOIS FED. AID PROJECT

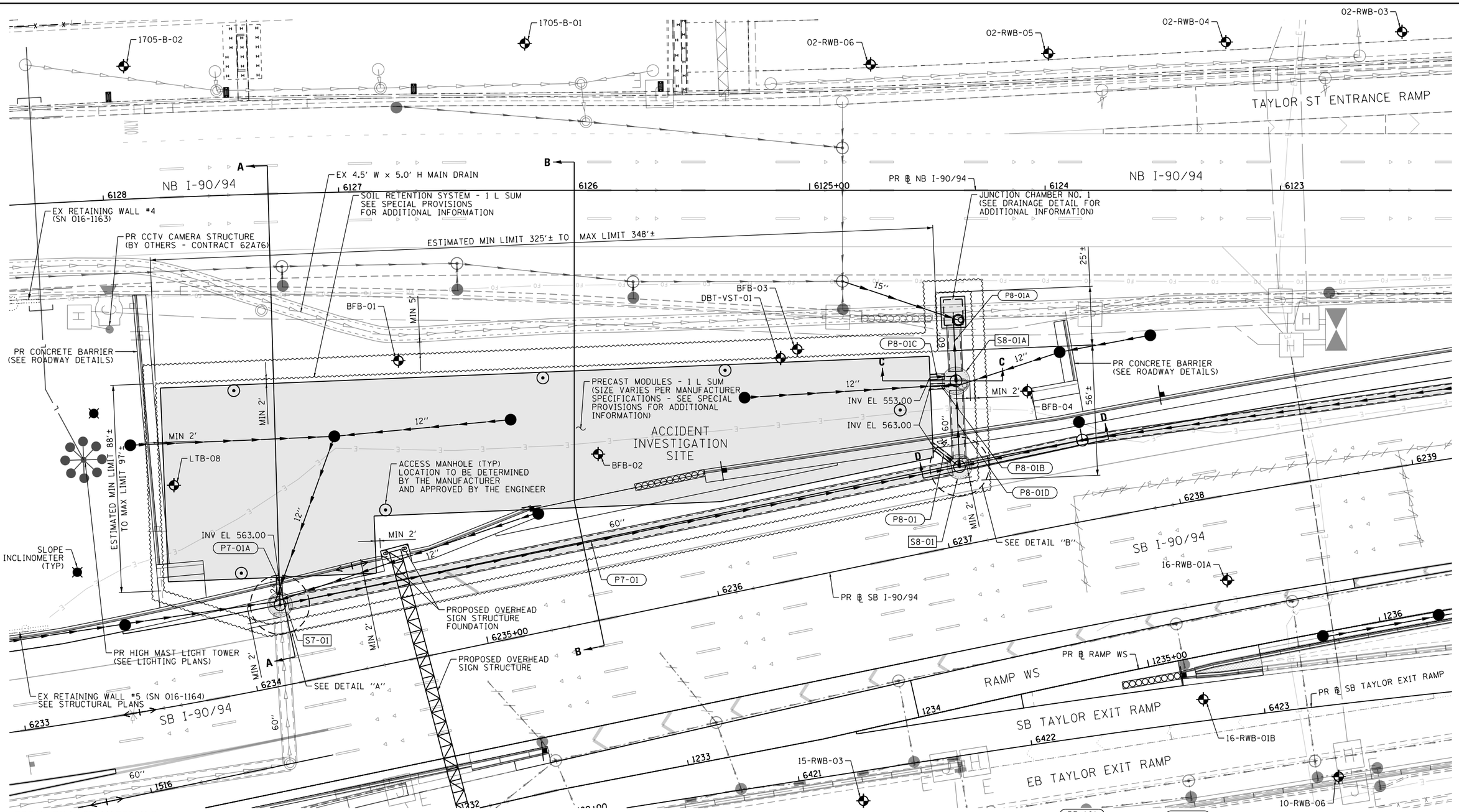

TOTAL BILL OF MATERIALS

SOIL RETENTION SYSTEM	L SUM	1
PRECAST MODULES	L SUM	1

NOTES:

1. SEE DRAINAGE AND UTILITY SCHEDULES FOR OTHER MISCELLANEOUS DRAINAGE ITEMS SHOWN ON THE PLAN.
2. UNLESS NOTED OTHERWISE, ALL STATIONS AND OFFSETS ARE TAKEN FROM PR ℄ SB I-90/94.

THE FOLLOWING SOIL BORINGS ARE NOT SHOWN ON THE PLAN VIEW:

BORING LOG NO.	NORTHING (FT)	EASTING (FT)
10-PZ-01	1897019.14	1171462.69
10-RWB-04	1896930.29	1171484.09
10-RWB-05	1896756.05	1171508.19
14-RWB-02	1897133.58	1171489.78

BORING LOG NO.	NORTHING (FT)	EASTING (FT)
14-RWB-03	1896992.53	1171501.15
15-RWB-02	1897034.79	1171464.06
VST-01	1897108.36	1171435.63

AECOM
303 EAST WACKER DRIVE, SUITE 1400
CHICAGO, IL 60601-5276
PHONE: (312) 373-7700 FAX: (312) 373-6800

D162A77-SHT-Drain-AIS-01.dgn	DESIGNED - MSC	REVISED -	
USER NAME = chua	DRAWN - AFC	REVISED -	
PLOT SCALE = 40.0000 ' / in.	CHECKED - MJE	REVISED -	
PLOT DATE = 1/31/2020	DATE - 1/29/2019	REVISED -	

STATE OF ILLINOIS
DEPARTMENT OF TRANSPORTATION

DETENTION STORAGE TANK
ACCIDENTIONS INVESTIGATION SITE

SCALE: 1''=20' | SHEET 3 OF 7 SHEETS | STA. TO STA.

F.A.I. RTE.	SECTION	COUNTY	TOTAL SHEETS	SHEET NO.
90/94/290	2015-018R	COOK	1360	530
		CONTRACT NO. 62A77		
		ILLINOIS FED. AID PROJECT		

FILE PATH = pw:\\AECOM-NA-AWS1.aecomonline.local:AECOM_DS02_NA\Documents\01 Americas\Transportation\60269938 Circle\Phase.II\000_CAD\006_Roadway\Sheets\62A77 Contracts\D162A77-SHT-Drain-AIS-01.dgn

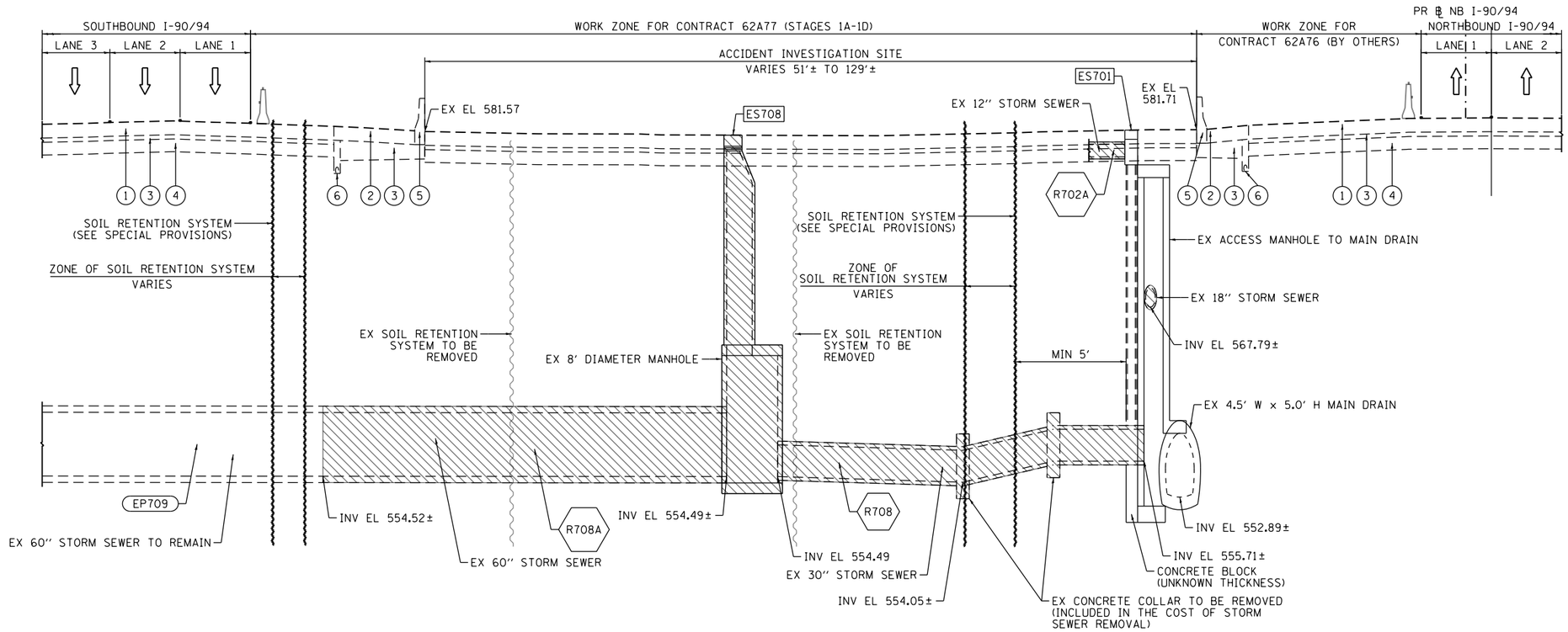

SECTION 1–1
(LOOKING NORTH)

EXISTING LEGEND

1. CONTINUOUSLY REINFORCED PORTLAND CEMENT CONCRETE PAVEMENT 13"
2. BITUMINOUS SHOULDER, 13"
3. STABILIZED SUBBASE - HOT-MIX ASPHALT, 4"
4. POROUS GRANULAR EMBANKMENT, SPECIAL VARIES 0" TO 36"
5. CONCRETE BARRIER
6. PIPE UNDERDRAINS, 6" (FABRIC LINED TRENCH)

ITEMS TO BE REMOVED (SEE EXISTING DRAINAGE AND UTILITY PLANS FOR ADDITIONAL INFORMATION)

AECOM
303 EAST WACKER DRIVE, SUITE 1400
CHICAGO, IL 60601-5276
PHONE: (312) 373-7700 FAX: (312) 373-6800

D162A77-SHT-Drain-AIS-02.dgn	DESIGNED - AFC	REVISED -
USER NAME = chiua	DRAWN - AFC	REVISED -
PLOT SCALE = 20.0000 ' / in.	CHECKED - MJE	REVISED -
PLOT DATE = 1/31/2020	DATE - 1/29/2019	REVISED -

STATE OF ILLINOIS
DEPARTMENT OF TRANSPORTATION

ACCIDENT INVESTIGATION SITE – EXISTING CONDITIONS
DETENTION STORAGE TANK TYPICAL SECTIONS

SCALE: NTS | SHEET 4 OF 7 SHEETS | STA. TO STA.

F.A.I. RTE.	SECTION	COUNTY	TOTAL SHEETS	SHEET NO.
90/94/290	2015-018R	COOK	1360	531

CONTRACT NO. 62A77
ILLINOIS FED. AID PROJECT

FILE PATH = pw:\\AECOM-NA-AWS1.aecomonline.local:AECOM_DS02_NA\Documents\01 Americas\Transportation\60269938 Circle\Phase_II\000_CAD\006_Roadway\Sheets\62A77 Contract\D162A77-SHT-Drain-AIS-02.dgn

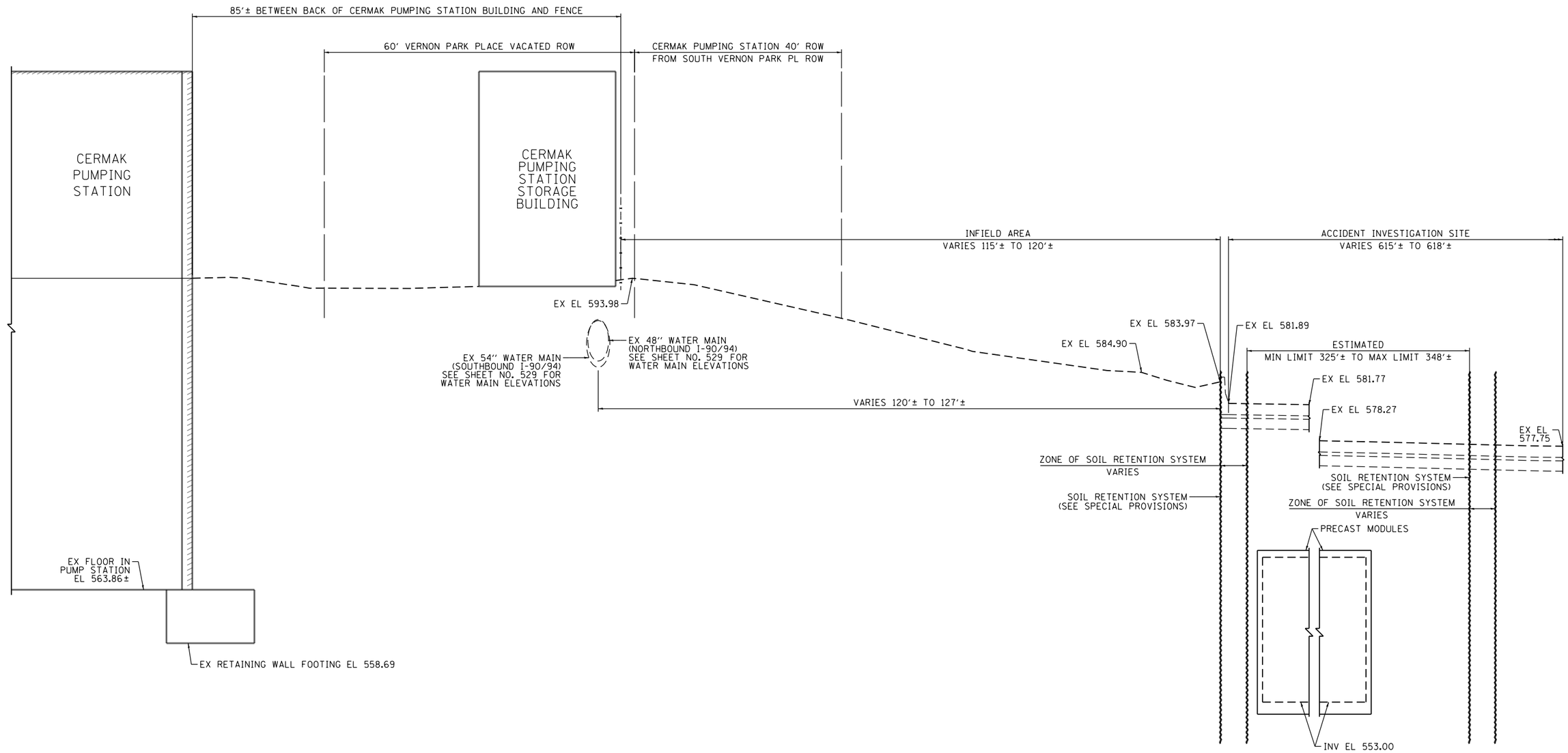

NOTE:

1. CONTRACTOR TO FIELD VERIFY EXISTING CONDITIONS. EXISTING ELEVATIONS SHOWN ARE BASED ON TOPOGRAPHY SURVEY, SUE TEST HOLES AND EXISTING PLANS. SEE CITY OF CHICAGO GENERAL NOTES FOR CONVERSION OF CITY OF CHICAGO DATUM.

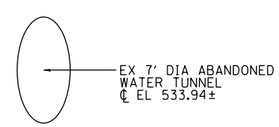

SECTION 2–2
(LOOKING EAST)

FILE PATH = pw:\\AECOM-NA-AWS1.aecomonline.local:AECOM_DS02_NA\Documents\01 Americas\Transportation\60269938 Circle\Phase_II\000_CAD\006_Roadway\Sheets\62A77 Contracts\D162A77-SHT-Drain-AIS-02A.dgn

AECOM
303 EAST WACKER DRIVE, SUITE 1400
CHICAGO, IL 60601-5276
PHONE: (312) 373-7700 FAX: (312) 373-6800

D162A77-SHT-Drain-AIS-02A.dgn	DESIGNED - AFC	REVISED -	
USER NAME = chiua	DRAWN - AFC	REVISED -	
PLOT SCALE = 20.0000 ' / in.	CHECKED - MJE	REVISED -	
PLOT DATE = 1/31/2020	DATE - 1/29/2019	REVISED -	

STATE OF ILLINOIS
DEPARTMENT OF TRANSPORTATION

ACCIDENT INVESTIGATION SITE – EXISTING CONDITIONS
DETENTION STORAGE TANK SECTIONS

SCALE: NTS | SHEET 5 OF 7 SHEETS | STA. TO STA.

F.A.I. RTE.	SECTION	COUNTY	TOTAL SHEETS	SHEET NO.
90/94/290	2015-018R	COOK	1360	531A
		CONTRACT NO. 62A77		
		ILLINOIS FED. AID PROJECT		

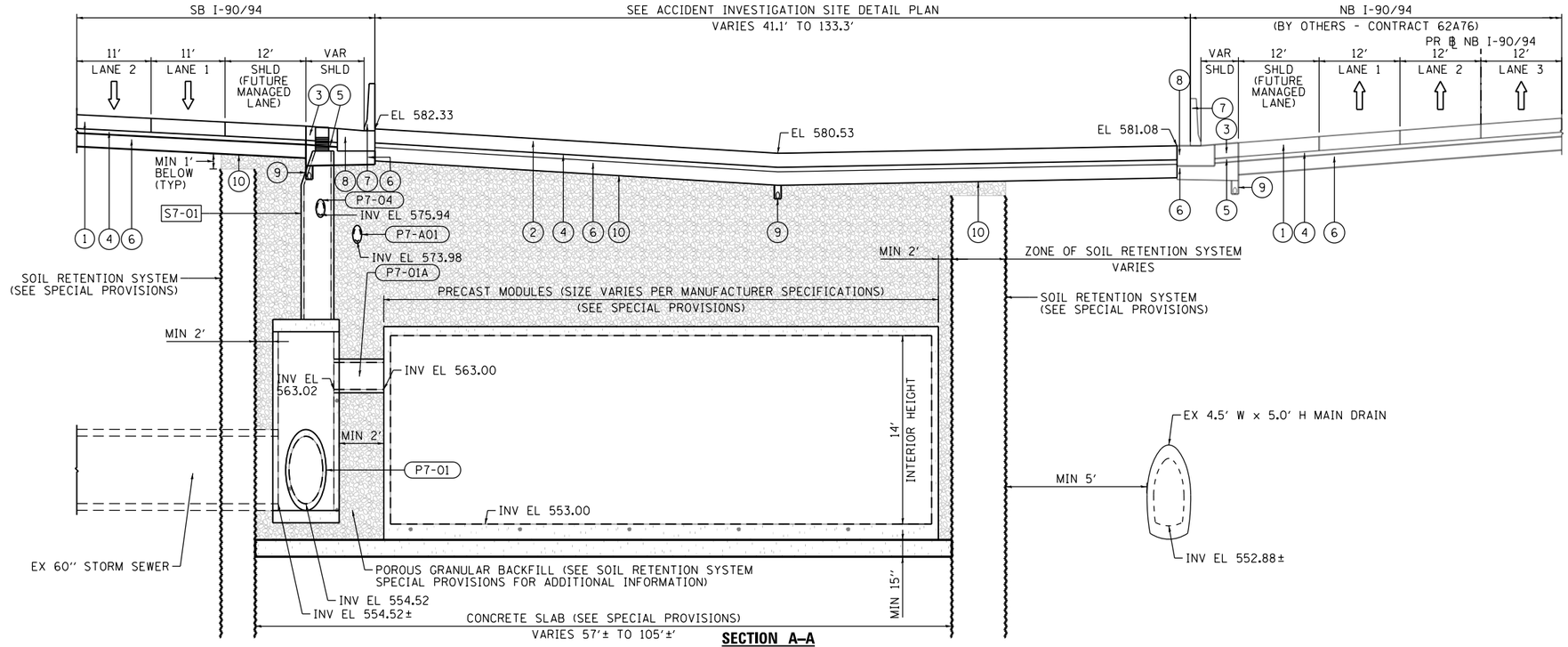

SECTION A–A
(LOOKING NORTH)

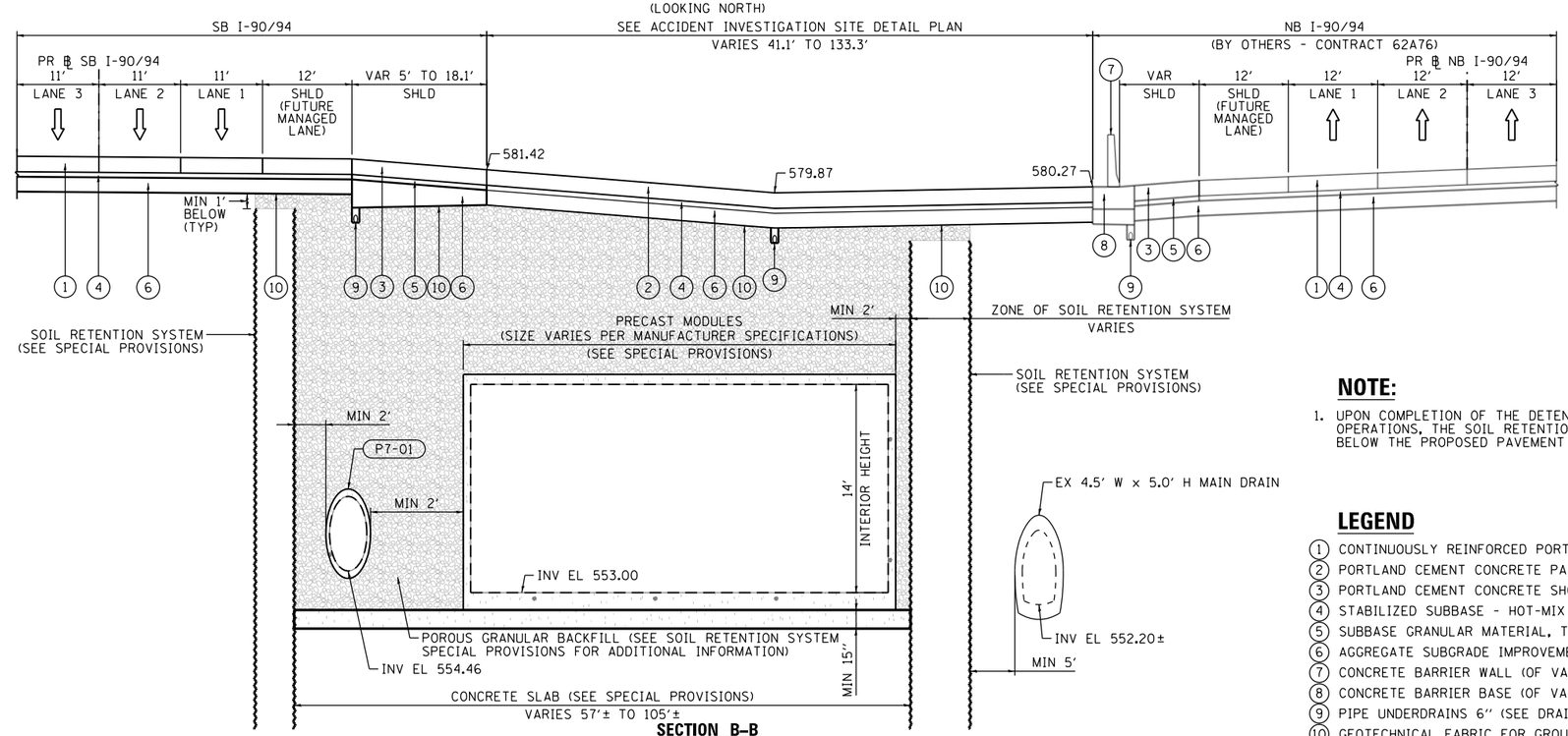

SECTION B–B
(LOOKING NORTH)

NOTE:

1. UPON COMPLETION OF THE DETENTION STORAGE TANK AND BACKFILLING OPERATIONS, THE SOIL RETENTION SYSTEM WILL BE REMOVED TO 1' BELOW THE PROPOSED PAVEMENT STRUCTURE.

LEGEND

1. CONTINUOUSLY REINFORCED PORTLAND CEMENT CONCRETE PAVEMENT 12½"
2. PORTLAND CEMENT CONCRETE PAVEMENT 12½" (JOINTED)
3. PORTLAND CEMENT CONCRETE SHOULDERS 12½"
4. STABILIZED SUBBASE - HOT-MIX ASPHALT, 4"
5. SUBBASE GRANULAR MATERIAL, TYPE B 4"
6. AGGREGATE SUBGRADE IMPROVEMENT 12"
7. CONCRETE BARRIER WALL (OF VARIOUS TYPES, SEE ROADWAY DETAILS)
8. CONCRETE BARRIER BASE (OF VARIOUS TYPES, SEE ROADWAY DETAILS)
9. PIPE UNDERDRAINS 6" (SEE DRAINAGE PLANS)
10. GEOTECHNICAL FABRIC FOR GROUND STABILIZATION

AECOM
303 EAST WACKER DRIVE, SUITE 1400
CHICAGO, IL 60601-5276
PHONE: (312) 373-7700 FAX: (312) 373-6800

D162A77-SHT-Drain-AIS-03.dgn	DESIGNED - AFC	REVISED -
USER NAME = chiua	DRAWN - AFC	REVISED -
PLOT SCALE = 20.0000 ' / in.	CHECKED - MJE	REVISED -
PLOT DATE = 1/31/2020	DATE - 1/29/2019	REVISED -

STATE OF ILLINOIS
DEPARTMENT OF TRANSPORTATION

ACCIDENT INVESTIGATION SITE – PROPOSED CONDITIONS
DETENTION STORAGE TANK SECTIONS

SCALE: NTS | SHEET 6 OF 7 SHEETS | STA. TO STA.

F.A.I. RTE.	SECTION	COUNTY	TOTAL SHEETS	SHEET NO.
90/94/290	2015-018R	COOK	1360	532
		CONTRACT NO. 62A77		
		ILLINOIS FED. AID PROJECT		

FILE PATH = pw:\\AECOM-NA-AWS1.aecomonline.local:AECOM_DS02_NA\Documents\01 Americas\Transportation\60269938 Circle\Phase II\000_CAD\006_Roadway\Sheets\62A77 Contracts\D162A77-SHT-Drain-AIS-03.dgn

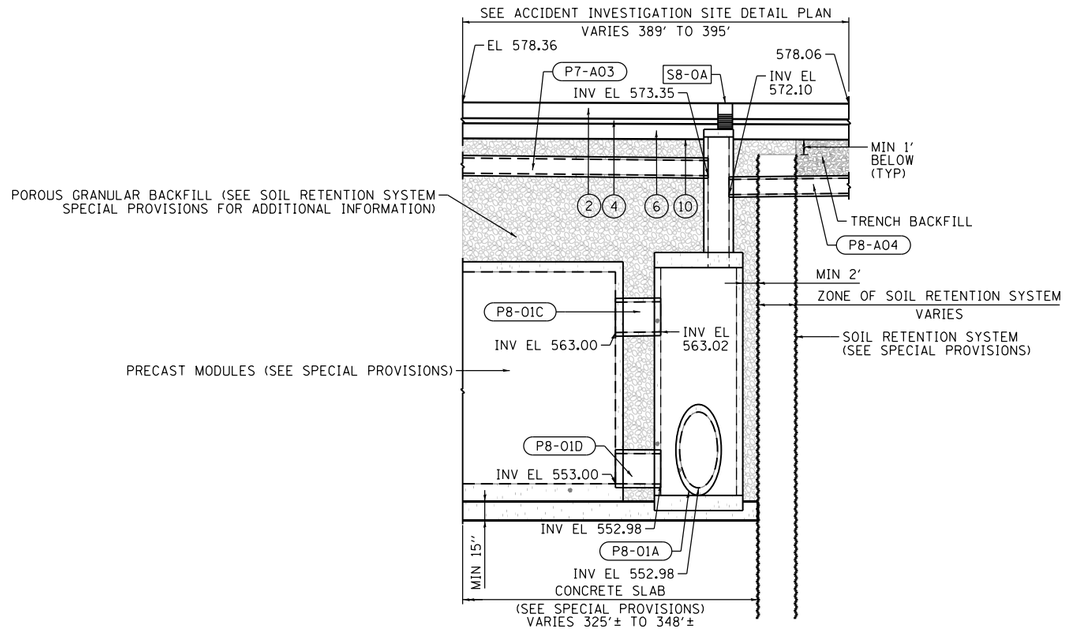

SECTION C–C
(LOOKING EAST)

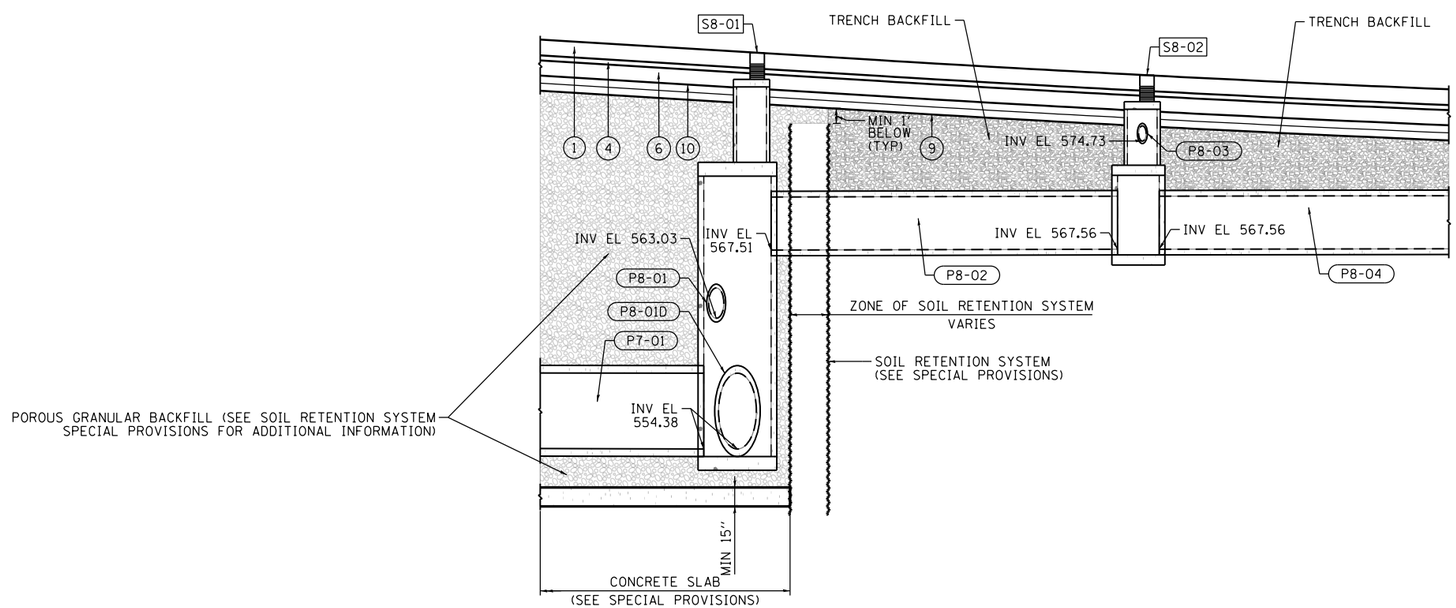

SECTION D–D
(LOOKING EAST)

LEGEND

1. CONTINUOUSLY REINFORCED PORTLAND CEMENT CONCRETE PAVEMENT 12½"
2. PORTLAND CEMENT CONCRETE PAVEMENT 12½" (JOINTED)
3. PORTLAND CEMENT CONCRETE SHOULDERS 12½"
4. STABILIZED SUBBASE - HOT-MIX ASPHALT, 4"
5. SUBBASE GRANULAR MATERIAL, TYPE B 4"
6. AGGREGATE SUBGRADE IMPROVEMENT 12"
7. CONCRETE BARRIER WALL (OF VARIOUS TYPES, SEE ROADWAY DETAILS)
8. CONCRETE BARRIER BASE (OF VARIOUS TYPES, SEE ROADWAY DETAILS)
9. PIPE UNDERDRAINS 6" (SEE DRAINAGE PLANS)
10. GEOTECHNICAL FABRIC FOR GROUND STABILIZATION

AECOM
303 EAST WACKER DRIVE, SUITE 1400
CHICAGO, IL 60601-5276
PHONE: (312) 373-7700 FAX: (312) 373-6800

D162A77-SHT-Drain-AIS-04.dgn	DESIGNED - AFC	REVISED -
USER NAME = chiua	DRAWN - AFC	REVISED -
PLOT SCALE = 20.0000 ' / in.	CHECKED - MJE	REVISED -
PLOT DATE = 1/31/2020	DATE - 1/29/2019	REVISED -

STATE OF ILLINOIS
DEPARTMENT OF TRANSPORTATION

ACCIDENT INVESTIGATION SITE – PROPOSED CONDITIONS
DETENTION STORAGE TANK SECTIONS

SCALE: NTS | SHEET 7 OF 7 SHEETS | STA. TO STA.

F.A.I. RTE.	SECTION	COUNTY	TOTAL SHEETS	SHEET NO.
90/94/290	2015-018R	COOK	1360	533
		CONTRACT NO. 62A77		
	ILLINOIS	FED. AID PROJECT		

FILE PATH = pw:\\AECOM-NA-AWS1.aecomonline.local:AECOM_DS02_NA\Documents\01 Americas\Transportation\60269938 Circle\Phase_II\002.CAD\006.Roadway\Sheets\62A77 Contracts\D162A77-SHT-Drain-AIS-04.dgn

Wang Engineering
wangeng@wangeng.com
1145 N. Main Street
Lombard/IL/60148
Telephone: 6309539928
Fax: 6309539938

BORING LOG BFB-01

WEI Job No.: 1100-04-01

Client: **AECOM**
Project: **Jane Byrne Interchange**
Location: **Section 17, T39N, R14E of 3rd PM**

Datum: NAVD 88
Elevation: 580.78 ft
North: 1896998.21 ft
East: 1171705.12 ft
Station: 6234+87.06
Offset: 125.33' LT

Elevation (ft)	SOIL AND ROCK DESCRIPTION	Depth (ft)	Sample Type / Recovery	Sample No.	SPT Values (0w/6 in)	Qu (tsf)	Moisture Content (%)
	8.5-inch thick CONCRETE --PAVEMENT--						
580.1	7.5-inch thick, gray SANDY GRAVEL; damp --BASE COURSE--						
579.5	Stiff (1.75P), brown SILTY CLAY LOAM, trace gravel; damp --FILL-- --RDR 2--			1	3 2 4	NP	20
577.8	Soft to medium stiff, gray SILTY CLAY LOAM, trace gravel; damp --RDR 1--	5		2	1 3 3	0.90 B	21
				3	1 1 2	0.41 B	17
		10		4	1 2 2	0.49 B	16
570.3	Very soft to medium stiff, gray CLAY to SILTY CLAY, trace gravel; damp to moist --RDR 1--			5	1 1 2	0.16 B	24
	--L_L(%)=35, P_L(%)=18-- --%Gravel=5.3-- --%Sand=14.1-- --%Silt=46.6-- --%Clay=33.9-- --A-6 (13)--	15		6	1 1 1	0.25 B	22
				7	1 1 1	0.25 B	24
542.8	Very stiff, gray SILTY CLAY LOAM to SILTY LOAM, trace gravel; damp --RDR 2--	20		8	0 1 1	0.25 B	25

Elevation (ft)	SOIL AND ROCK DESCRIPTION	Depth (ft)	Sample Type / Recovery	Sample No.	SPT Values (0w/6 in)	Qu (tsf)	Moisture Content (%)
		25		9	0 1 1	0.25 B	24
				10	1 1 1	0.25 B	25
		30		11	1 2 1	0.33 B	26
				12	1 1 2	0.33 B	25
		35		13	1 2 3	0.57 B	24
				14	1 2 2	0.57 B	25
				15	2 3 6	0.57 B	26
		40		16	2 12 24	3.00 P	12

GENERAL NOTES

Begin Drilling: **06-27-2019** Complete Drilling: **06-27-2019**
Drilling Contractor: **Wang Testing Services** Drill Rig:
Driller: **N&A** Logger: **F. Bozga** Checked by: **C. Marin**
Drilling Method: **2.25" HSA to 10', mud rotary thereafter, boring backfilled upon completion**

WATER LEVEL DATA

While Drilling: **52.00 ft**
At Completion of Drilling: **9 ft Mud**
Time After Drilling: **NA**
Depth to Water: **NA**

The stratification lines represent the approximate boundary between soil types; the actual transition may be gradual.

Wang Engineering
wangeng@wangeng.com
1145 N. Main Street
Lombard/IL/60148
Telephone: 6309539928
Fax: 6309539938

BORING LOG BFB-01

WEI Job No.: 1100-04-01

Client: **AECOM**
Project: **Jane Byrne Interchange**
Location: **Section 17, T39N, R14E of 3rd PM**

Datum: NAVD 88
Elevation: 580.78 ft
North: 1896998.21 ft
East: 1171705.12 ft
Station: 6234+87.06
Offset: 125.33' LT

Elevation (ft)	SOIL AND ROCK DESCRIPTION	Depth (ft)	Sample Type / Recovery	Sample No.	SPT Values (0w/6 in)	Qu (tsf)	Moisture Content (%)
539.0	Hard, gray SILTY CLAY, trace gravel; damp --RDR 2--						
		45		17	9 13 26	6.07 B	18
		50		18	9 14 21	5.82 B	18
528.8	Medium dense to dense, dark gray GRAVELLY SANDY LOAM; wet to saturated --RDR 2--			19	14 16 15	NP	11
		60		20	15 15 15	NP	10

Elevation (ft)	SOIL AND ROCK DESCRIPTION	Depth (ft)	Sample Type / Recovery	Sample No.	SPT Values (0w/6 in)	Qu (tsf)	Moisture Content (%)
	--%Gravel=27.9-- --%Sand=55.7-- --%Silt=13.9-- --%Clay=2.5-- --A-1-b (0)--	65		21	15 16 17	NP	12
		70		22	14 14 16	NP	12
		75		23	12 13 15	NP	12
	--hard drilling, from 77 feet-- --possible cobbles--						
493.8	Hard, gray SILTY LOAM, little to some gravel; dry --RDR 3 to 5--						
		80		24	>70/4"	> 4.50 P	9

GENERAL NOTES

Begin Drilling: **06-27-2019** Complete Drilling: **06-27-2019**
Drilling Contractor: **Wang Testing Services** Drill Rig:
Driller: **N&A** Logger: **F. Bozga** Checked by: **C. Marin**
Drilling Method: **2.25" HSA to 10', mud rotary thereafter, boring backfilled upon completion**

WATER LEVEL DATA

While Drilling: **52.00 ft**
At Completion of Drilling: **9 ft Mud**
Time After Drilling: **NA**
Depth to Water: **NA**

The stratification lines represent the approximate boundary between soil types; the actual transition may be gradual.

Wang Engineering
wangeng@wangeng.com
1145 N. Main Street
Lombard/IL/60148
Telephone: 6309539928
Fax: 6309539938

BORING LOG BFB-01

WEI Job No.: 1100-04-01

Client: **AECOM**
Project: **Jane Byrne Interchange**
Location: **Section 17, T39N, R14E of 3rd PM**

Datum: NAVD 88
Elevation: 580.78 ft
North: 1896998.21 ft
East: 1171705.12 ft
Station: 6234+87.06
Offset: 125.33' LT

Elevation (ft)	SOIL AND ROCK DESCRIPTION	Depth (ft)	Sample Type / Recovery	Sample No.	SPT Values (0w/6 in)	Qu (tsf)	Moisture Content (%)
	--possible cobbles--						
	--slow advancement from 83.5 to 86.0 feet--			25	>70/4"	> 4.50 P	
496.3	--cobbles and boulders--	85					
	Strong, light grayish gray, good quality, DOLOSTONE; Moderately spaced, fresh, horizontal and oblique joints, with 0-0.2 inch opening, slicken to slightly rough walls, and <0.2 inch thick sand infill. Run 1 : 86 to 96 feet --Recovery=100% --RQD=87% --Q_u=16,270 psi				C O R E		
		90					
				26			
		95					
484.8	Boring terminated at 96.00 ft						
		100					

GENERAL NOTES

Begin Drilling: **06-27-2019** Complete Drilling: **06-27-2019**
Drilling Contractor: **Wang Testing Services** Drill Rig:
Driller: **N&A** Logger: **F. Bozga** Checked by: **C. Marin**
Drilling Method: **2.25" HSA to 10', mud rotary thereafter, boring backfilled upon completion**

WATER LEVEL DATA

While Drilling: **52.00 ft**
At Completion of Drilling: **9 ft Mud**
Time After Drilling: **NA**
Depth to Water: **NA**

The stratification lines represent the approximate boundary between soil types; the actual transition may be gradual.

WANGENGINC 11000401.GPJ WANGENG.GDT 7/22/19

FILE PATH = pw:\\AECOM-NA-AWS1.aecomonline.local:AECOM_DS02_NA\Documents\01 Americas\Transportation\60269938 Circle\Phase.II\000_CAD\006_Roadway\Sheets\62A77 Contract\D162A77-SHT-AIS-BORING-01.dgn

AECOM
303 EAST WACKER DRIVE, SUITE 1400
CHICAGO, IL 60601-5276
PHONE: (312) 373-7700 FAX: (312) 373-6800

D162A77-SHT-AIS-BORING-01.dgn	DESIGNED -	REVISED -	
USER NAME = Jacqueline.Ng	DRAWN -	REVISED -	
PLOT SCALE = 2.0000 ' / in.	CHECKED -	REVISED -	
PLOT DATE = 1/30/2020	DATE - 1/29/2019	REVISED -	

STATE OF ILLINOIS
DEPARTMENT OF TRANSPORTATION

BORING LOGS I

SCALE: NONE | SHEET 1 OF 19 SHEETS | STA. TO STA.

F.A.I. RTE.	SECTION	COUNTY	TOTAL SHEETS	SHEET NO.
90/94/290	2015-018R	COOK	1360	534

CONTRACT NO. 62A77

ILLINOIS FED. AID PROJECT

BORING LOG BFB-02

Wang Engineering
wangeng@wangeng.com
1145 N. Main Street
Lombard/IL/60148
Telephone: 6309539928
Fax: 6309539938

WEI Job No.: 1100-04-01

Client: AECOM
Project: Jane Byrne Interchange
Location: Section 17, T39N, R14E of 3rd PM

Datum: NAVD 88
Elevation: 579.59 ft
North: 1896913.63 ft
East: 1171664.99 ft
Station: 6235+62.04
Offset: 69.27' LT

Elevation (ft)	SOIL AND ROCK DESCRIPTION	Depth (ft)	Sample Type / Recovery	Sample No.	SPT Values (6w/6 in)	Qu (tsf)	Moisture Content (%)
	10-inch thick CONCRETE						
578.8	--PAVEMENT--						
	10-inch thick, loose, gray SANDY GRAVEL; moist						
577.9	--BASE COURSE--						
	Medium stiff (0.75P), brown to gray SILTY CLAY LOAM, trace gravel; damp						
576.6	--FILL--						
	--RDR 2--						
	Very soft to medium stiff, gray CLAY to SILTY CLAY, trace gravel; damp to moist						
	--RDR 1--						
	--L_L(%)=44, P_L(%)=20--						
	--%Gravel=0.5--						
	--%Sand=5.3--						
	--%Silt=38.6--						
	--%Clay=55.5--						
	--A-7-6 (24)--						
	--L_L(%)=35, P_L(%)=18--						
	--%Gravel=4.2--						
	--%Sand=13.9--						
	--%Silt=46.9--						
	--%Clay=34.9--						
	--A-6 (13)--						
545.3	Stiff to hard, gray SILTY CLAY LOAM, trace gravel; damp						
	--RDR 2--						

Sample No.	SPT Values (6w/6 in)	Qu (tsf)	Moisture Content (%)
1	7 3 3	NP	6
2	2 2 3	0.66 B	36
3	0 1 1	0.57 B	24
4	2 1 2	0.82 B	19
5	1 1 2	0.16 B	24
6	1 1 2	0.33 B	23
7	0 1 2	0.33 B	26
8	1 1 2	0.33 B	25
9	1 1 1	0.33 B	25
10	0 1 2	0.25 B	26
11	1 1 2	0.33 B	25
12	1 2 3	0.25 B	20
13	0 2 2	0.57 B	25
14	2 2 4	1.00 N/6	
15	4 6 8	1.75 P	16
16	10 15 23	6.48 S	13

Depth (ft): 5, 10, 15, 20, 25, 30, 35, 40

GENERAL NOTES

Begin Drilling: 06-26-2019 Complete Drilling: 06-26-2019
Drilling Contractor: Wang Testing Services Drill Rig:
Driller: N&A Logger: F. Bozga Checked by: C. Marin
Drilling Method: 2.25" HSA to 10', mud rotary thereafter, boring backfilled upon completion

WATER LEVEL DATA

While Drilling: 44.00 ft
At Completion of Drilling: 10 ft Mud
Time After Drilling: NA
Depth to Water: NA

The stratification lines represent the approximate boundary between soil types; the actual transition may be gradual.

BORING LOG BFB-02

Wang Engineering
wangeng@wangeng.com
1145 N. Main Street
Lombard/IL/60148
Telephone: 6309539928
Fax: 6309539938

WEI Job No.: 1100-04-01

Client: AECOM
Project: Jane Byrne Interchange
Location: Section 17, T39N, R14E of 3rd PM

Datum: NAVD 88
Elevation: 579.59 ft
North: 1896913.63 ft
East: 1171664.99 ft
Station: 6235+62.04
Offset: 69.27' LT

Elevation (ft)	SOIL AND ROCK DESCRIPTION	Depth (ft)	Sample Type / Recovery	Sample No.	SPT Values (6w/6 in)	Qu (tsf)	Moisture Content (%)
535.6							
535.1	Gray SILTY LOAM; wet						
	Hard, gray SILTY CLAY, trace gravel; damp						
	--RDR 2--						
	--change in drilling conditions at 52.5 feet--						
527.1	Dense, gray GRAVELLY SAND; wet						
	--RDR 2--						
522.8	Dense, dark gray, medium to coarse SAND; wet to saturated						
	--RDR 2 to 3--						
	--possible cobbles--						
	--%Gravel=6.8--						
	--%Sand=75.9--						
	--%Silt=14.4--						
	--%Clay=2.8--						
	--A-1-b (0)--						
512.8	Dense to very dense, gray SANDY GRAVEL, few cobbles; wet						
	--RDR 3 to 4--						
	--occasional chatter--						
	--possible cobbles--						
	--few cobble fragments--						
502.8	Very dense, gray SILTY LOAM, trace gravel; damp to moist						
	--RDR 3 to 5--						

Sample No.	SPT Values (6w/6 in)	Qu (tsf)	Moisture Content (%)
17A	9 18 23	6.50 B	17
18	13 15 25	9.35 B	21
19	19 23 18	NP	10
20	9 14 17	NP	18
21	12 14 16	NP	16
22	15 23 23	NP	10
23	47 50/5"	NP	8
24	33 50/5"	4.59 S	10

Depth (ft): 45, 50, 55, 60, 65, 70, 75, 80

GENERAL NOTES

Begin Drilling: 06-26-2019 Complete Drilling: 06-26-2019
Drilling Contractor: Wang Testing Services Drill Rig:
Driller: N&A Logger: F. Bozga Checked by: C. Marin
Drilling Method: 2.25" HSA to 10', mud rotary thereafter, boring backfilled upon completion

WATER LEVEL DATA

While Drilling: 44.00 ft
At Completion of Drilling: 10 ft Mud
Time After Drilling: NA
Depth to Water: NA

The stratification lines represent the approximate boundary between soil types; the actual transition may be gradual.

BORING LOG BFB-02

Wang Engineering
wangeng@wangeng.com
1145 N. Main Street
Lombard/IL/60148
Telephone: 6309539928
Fax: 6309539938

WEI Job No.: 1100-04-01

Client: AECOM
Project: Jane Byrne Interchange
Location: Section 17, T39N, R14E of 3rd PM

Datum: NAVD 88
Elevation: 579.59 ft
North: 1896913.63 ft
East: 1171664.99 ft
Station: 6235+62.04
Offset: 69.27' LT

Elevation (ft)	SOIL AND ROCK DESCRIPTION	Depth (ft)	Sample Type / Recovery	Sample No.	SPT Values (6w/6 in)	Qu (tsf)	Moisture Content (%)
494.1	--slow auger advancement from 85.5 to 87.0 feet--						
	--WEATHERED BEDROCK--						
492.6	Strong, light grayish gray, good quality, DOLOSTONE; Moderately spaced, fresh, horizontal and oblique joints, with 0-0.2 inch opening, slicken to slightly rough walls, and 0 - 0.2 inch thick clay infill. Run 1 : 87 to 97 feet		CORE				
	--Recovery=100%						
	--RQD=83%						
	--Q_u=6,930 psi						
482.6	Boring terminated at 97.00 ft						

Sample No.	SPT Values (6w/6 in)	Qu (tsf)	Moisture Content (%)
25	25 50/5"	3.28 S	11
26			

Depth (ft): 85, 90, 95, 100

GENERAL NOTES

Begin Drilling: 06-26-2019 Complete Drilling: 06-26-2019
Drilling Contractor: Wang Testing Services Drill Rig:
Driller: N&A Logger: F. Bozga Checked by: C. Marin
Drilling Method: 2.25" HSA to 10', mud rotary thereafter, boring backfilled upon completion

WATER LEVEL DATA

While Drilling: 44.00 ft
At Completion of Drilling: 10 ft Mud
Time After Drilling: NA
Depth to Water: NA

The stratification lines represent the approximate boundary between soil types; the actual transition may be gradual.

FILE PATH = pw:\\AECOM-NA-AWS1.aecomonline.local:AECOM_DS02_NA\Documents\01 Americas\Transportation\60269938 Circle\Phase II\000 CAD\006_Roadway\Sheets\62A77 Contracts\DI62A77-SHT-AIS-BORING-02.dgn
WANGENGINC 1100040I.GPJ WANGENG.GDT 7/22/19

AECOM
303 EAST WACKER DRIVE, SUITE 1400
CHICAGO, IL 60601-5276
PHONE: (312) 373-7700 FAX: (312) 373-6800

DI62A77-SHT-AIS-BORING-02.dgn	DESIGNED -	REVISED -
USER NAME = Jacqueline.Ng	DRAWN -	REVISED -
PLOT SCALE = 2.0000 ' / in.	CHECKED -	REVISED -
PLOT DATE = 1/30/2020	DATE - 1/29/2019	REVISED -

STATE OF ILLINOIS
DEPARTMENT OF TRANSPORTATION

BORING LOGS II

SCALE: NONE | SHEET 2 OF 19 SHEETS | STA. TO STA.

F.A.I. RTE.	SECTION	COUNTY	TOTAL SHEETS	SHEET NO.
90/94/290	2015-018R	COOK	1360	535

CONTRACT NO. 62A77

ILLINOIS FED. AID PROJECT

Wang Engineering
wangeng@wangeng.com
1145 N. Main Street
Lombard/IL/60148
Telephone: 6309539928
Fax: 6309539938

BORING LOG BFB-03

WEI Job No.: 1100-04-01

Client: **AECOM**
Project: **Jane Byrne Interchange**
Location: **Section 17, T39N, R14E of 3rd PM**

Datum: NAVD 88
Elevation: 578.67 ft
North: 1896828.82 ft
East: 1171708.99 ft
Station: 6236+56.31
Offset: 92.89' LT

Elevation (ft)	SOIL AND ROCK DESCRIPTION
577.8	10-inch thick CONCRETE --PAVEMENT--
	Medium dense, gray CRUSHED STONE --AGGREGATE BASE--
575.7	Soft to medium stiff, gray SILTY CLAY LOAM, trace gravel --RDR 1--
568.2	Very soft to medium stiff, gray CLAY to SILTY CLAY, trace gravel --RDR 1--
544.2	Very stiff to hard, gray SILTY CLAY LOAM to SILTY LOAM, trace gravel; damp --RDR 2--

Depth (ft)	Sample Type	Sample No.	SPT Values (6w/6 in)	Qu (tsf)	Moisture Content (%)
		1	12 10 4	NP	5
5		2	4 2 3	NA	24
		3	2 2 4	0.82 B	19
10		4	1 2 3	0.49 B	15
		5	1 1 2	0.25 B	26
15		6	1 1 1	0.16 B	26
		7	1 1 0	0.25 B	26
20		8	0 0 0	0.16 B	23
25		9	1 1 1	0.16 B	26
		10	0 1 2	0.16 B	27
		11	1 1 2	0.41 B	26
30		12	1 2 2	0.49 B	25
		13	1 2 2	0.57 B	27
35		14	2 2 3	0.57 B	23
		15	5 5 10	2.46 B	14
40		16	15 21 20	8.28 B	14

--L_L(%)=37, P_L(%)=19--
--%Gravel=3.5--
--%Sand=10.5--
--%Silt=45.5--
--%Clay=40.5--
--A-6 (15)--

--3-inch thick silt lens; moist--

--L_L(%)=NP, P_L(%)=NP--
--%Gravel=4.7--
--%Sand=23.7--
--%Silt=59.6--

GENERAL NOTES

Begin Drilling: 06-24-2019 Complete Drilling: 06-24-2019
Drilling Contractor: Wang Testing Services Drill Rig:
Driller: N&A Logger: F. Bozga Checked by: C. Marin
Drilling Method: 2.25" HSA to 10', mud rotary thereafter, boring backfilled upon completion

WATER LEVEL DATA

While Drilling: 52.50 ft
At Completion of Drilling: 9 ft Mud
Time After Drilling: NA
Depth to Water: NA

The stratification lines represent the approximate boundary between soil types; the actual transition may be gradual.

Wang Engineering
wangeng@wangeng.com
1145 N. Main Street
Lombard/IL/60148
Telephone: 6309539928
Fax: 6309539938

BORING LOG BFB-03

WEI Job No.: 1100-04-01

Client: **AECOM**
Project: **Jane Byrne Interchange**
Location: **Section 17, T39N, R14E of 3rd PM**

Datum: NAVD 88
Elevation: 578.67 ft
North: 1896828.82 ft
East: 1171708.99 ft
Station: 6236+56.31
Offset: 92.89' LT

Elevation (ft)	SOIL AND ROCK DESCRIPTION
	--%Clay=12.1-- --A-4 (0)--
526.9	Dense, gray SANDY GRAVEL, trace cobbles; wet --RDR 3--
521.9	Medium dense, dark gray, fine SAND, few silt lenses; wet --RDR 2--
516.9	Hard, gray SILTY LOAM to SILTY CLAY LOAM, trace to little gravel; damp --RDR 3 to 4--
501.9	Hard, gray SILTY CLAY, trace gravel; moist --RDR 3 to 4--
499.4	Gray, fine SAND; wet
498.7	

Depth (ft)	Sample Type	Sample No.	SPT Values (6w/6 in)	Qu (tsf)	Moisture Content (%)
45		17	7 13 16	9.76 B	12
50		18	9 12 17	6.89 B	12
55		19	14 17 15	NP	8
60		20	14 14 15	NP	22
65		21	19 20 24	7.46 B	12
70		22	29 50/5"	4.18 B	11
75		23	26 35 29	7.71 B	10
80		24	33 50/5"	9.76 B	20

--rig chatter; possible cobbles--

--L_L(%)=22, P_L(%)=13--
--%Gravel=14.4--
--%Sand=20.6--
--%Silt=46.3--
--%Clay=18.7--
--A-4 (3)--

--rig chatter; possible cobbles--

GENERAL NOTES

Begin Drilling: 06-24-2019 Complete Drilling: 06-24-2019
Drilling Contractor: Wang Testing Services Drill Rig:
Driller: N&A Logger: F. Bozga Checked by: C. Marin
Drilling Method: 2.25" HSA to 10', mud rotary thereafter, boring backfilled upon completion

WATER LEVEL DATA

While Drilling: 52.50 ft
At Completion of Drilling: 9 ft Mud
Time After Drilling: NA
Depth to Water: NA

The stratification lines represent the approximate boundary between soil types; the actual transition may be gradual.

Wang Engineering
wangeng@wangeng.com
1145 N. Main Street
Lombard/IL/60148
Telephone: 6309539928
Fax: 6309539938

BORING LOG BFB-03

WEI Job No.: 1100-04-01

Client: **AECOM**
Project: **Jane Byrne Interchange**
Location: **Section 17, T39N, R14E of 3rd PM**

Datum: NAVD 88
Elevation: 578.67 ft
North: 1896828.82 ft
East: 1171708.99 ft
Station: 6236+56.31
Offset: 92.89' LT

Elevation (ft)	SOIL AND ROCK DESCRIPTION
	--RDR 4-- --hard drilling, from 80 feet--
494.2	Very dense, gray SILTY LOAM, fe cobbles and boulders, some dolostone fragments; wet --RDR 5--
	Strong, light brownish gray, good quality, DOLOSTONE; Closely spaced, fresh, horizontal and oblique joints, with 0.05 - > 0.2 inch opening, slightly rough to rough walls, and 0 - 0.2 inch thick clay infill. Run 1 : 86 to 96 feet --Recovery=100% --RQD=80% --Q_u=9,840 psi --Q_u=7,650 psi
	Run 2 : 96 to 101 feet --Recovery=93% --RQD=82% --Q_u=7,960 psi
477.7	Boring terminated at 101.00 ft

Depth (ft)	Sample Type	Sample No.	SPT Values (6w/6 in)	Qu (tsf)	Moisture Content (%)
85		25	50/6"	NP	9
90	CORE	26			
95	CORE	27			
100					
105					
110					
115					
120					

GENERAL NOTES

Begin Drilling: 06-24-2019 Complete Drilling: 06-24-2019
Drilling Contractor: Wang Testing Services Drill Rig:
Driller: N&A Logger: F. Bozga Checked by: C. Marin
Drilling Method: 2.25" HSA to 10', mud rotary thereafter, boring backfilled upon completion

WATER LEVEL DATA

While Drilling: 52.50 ft
At Completion of Drilling: 9 ft Mud
Time After Drilling: NA
Depth to Water: NA

The stratification lines represent the approximate boundary between soil types; the actual transition may be gradual.

WANGENGINC 11000401.GPJ WANGENG.GDT 7/22/19

BORING LOG BFB-04

Wang Engineering
wangeng@wangeng.com
1145 N. Main Street
Lombard/IL/60148
Telephone: 6309539928
Fax: 6309539938

WEI Job No.: 1100-04-01

Client: AECOM
Project: Jane Byrne Interchange
Location: Section 17, T39N, R14E of 3rd PM

Datum: NAVD 88
Elevation: 577.34 ft
North: 1896731.22 ft
East: 1171690.68 ft
Station: 6237+45.14
Offset: 58.81' LT

Depth (ft)	Elevation (ft)	SOIL AND ROCK DESCRIPTION	Sample Type / Recovery	Sample No.	SPT Values (blw/6 in)	Qu (tsf)	Moisture Content (%)
	576.5	9.5-inch thick CONCRETE --PAVEMENT--					
	574.3	Medium dense, gray SANDY GRAVEL; damp --BASE COURSE-- --RDR 2--		1	12 13 14	NP	4
5	571.8	Medium stiff, gray CLAY LOAM to LOAM, trace gravel; damp --FILL-- --RDR 1-- --L_L(%)=25, P_L(%)=17-- --%Gravel=12.7-- --%Sand=28.1-- --%Silt=41.7-- --%Clay=17.5-- --A-4 (2)--		2	1 2 2	0.90 B	14
		Very soft to medium stiff, gray CLAY to SILTY CLAY, trace gravel; damp to moist --RDR 1--		3	1 2 2	0.74 B	21
10				4	1 1 2	0.49 B	24
				5	1 1 1	0.25 B	23
15				6	1 1 1	0.25 B	23
				7	1 1 1	0.16 B	23
20				8	1 1 1	0.33 B	26
25		--L_L(%)=34, P_L(%)=17-- --%Gravel=6.1-- --%Sand=14.1-- --%Silt=47.2-- --%Clay=32.6-- --A-6 (12)--		9	0 1 1	0.16 B	25
				10	1 1 1	< 0.25 P	25
				11	1 2 3	< 0.25 P	27
30				12	1 1 3	0.49 B	26
				13	1 1 3	0.57 B	27
35				14	1 1 3	0.41 B	22
	541.8	Very stiff, gray SILTY CLAY LOAM, trace gravel; damp --RDR 2--		15	5 7 8	3.28 B	15
	538.3 / 537.8	Gray, coarse SAND; saturated		16A	6 10 11	3.85 B	17
40		Hard, gray SILTY CLAY LOAM to					

GENERAL NOTES

Begin Drilling: 06-28-2019 Complete Drilling: 06-28-2019
Drilling Contractor: Wang Testing Services Drill Rig:
Driller: N&A Logger: F. Bozga Checked by: C. Marin
Drilling Method: 2.25" HSA to 10', mud rotary thereafter, boring backfilled upon completion

WATER LEVEL DATA

While Drilling: 39.00 ft
At Completion of Drilling: 9 ft Mud
Time After Drilling: NA
Depth to Water: NA

The stratification lines represent the approximate boundary between soil types; the actual transition may be gradual.

BORING LOG BFB-04

Wang Engineering
wangeng@wangeng.com
1145 N. Main Street
Lombard/IL/60148
Telephone: 6309539928
Fax: 6309539938

WEI Job No.: 1100-04-01

Client: AECOM
Project: Jane Byrne Interchange
Location: Section 17, T39N, R14E of 3rd PM

Datum: NAVD 88
Elevation: 577.34 ft
North: 1896731.22 ft
East: 1171690.68 ft
Station: 6237+45.14
Offset: 58.81' LT

Depth (ft)	Elevation (ft)	SOIL AND ROCK DESCRIPTION	Sample Type / Recovery	Sample No.	SPT Values (blw/6 in)	Qu (tsf)	Moisture Content (%)
		SILTY LOAM, trace gravel; damp --RDR 2--					
45		--L_L(%)=23, P_L(%)=15-- --%Gravel=11.8-- --%Sand=23.8-- --%Silt=46.6-- --%Clay=17.8-- --A-4 (2)--		17	12 15 26	10.00 B	12
	530.6	Very dense, gray SILT; saturated --RDR 2--					
50				18	27 27 34	NP	21
	525.6	Hard, gray CLAY; moist --RDR 2--					
55				19	7 10 9	4.43 B	31
	520.6	Medium dense, gray GRAVELLY SAND; wet --RDR 2--					
60				20	9 10 10	NP	13
	515.6	Hard, gray SILTY CLAY, trace gravel --RDR 2--					
65				21	15 13 22	9.68 B	13
		--possible cobbles--					
	510.6	Hard, gray SILTY LOAM, trace gravel and cobbles; damp --RDR 3--					
70				22	70/3"	> 4.50 P	11
	505.6	Very stiff to hard, gray CALY to SILTY CLAY, trace gravel and cobbles; damp --RDR 2--					
75				23	38 32 37	3.00 P	26
80		--L_L(%)=42, P_L(%)=20-- --%Gravel=1.0-- --%Sand=2.4-- --%Silt=42.4--		24	13 15 19	5.66 B	22

GENERAL NOTES

Begin Drilling: 06-28-2019 Complete Drilling: 06-28-2019
Drilling Contractor: Wang Testing Services Drill Rig:
Driller: N&A Logger: F. Bozga Checked by: C. Marin
Drilling Method: 2.25" HSA to 10', mud rotary thereafter, boring backfilled upon completion

WATER LEVEL DATA

While Drilling: 39.00 ft
At Completion of Drilling: 9 ft Mud
Time After Drilling: NA
Depth to Water: NA

The stratification lines represent the approximate boundary between soil types; the actual transition may be gradual.

BORING LOG BFB-04

Wang Engineering
wangeng@wangeng.com
1145 N. Main Street
Lombard/IL/60148
Telephone: 6309539928
Fax: 6309539938

WEI Job No.: 1100-04-01

Client: AECOM
Project: Jane Byrne Interchange
Location: Section 17, T39N, R14E of 3rd PM

Datum: NAVD 88
Elevation: 577.34 ft
North: 1896731.22 ft
East: 1171690.68 ft
Station: 6237+45.14
Offset: 58.81' LT

Depth (ft)	Elevation (ft)	SOIL AND ROCK DESCRIPTION	Sample Type / Recovery	Sample No.	SPT Values (blw/6 in)	Qu (tsf)	Moisture Content (%)
		--%Clay=54.2-- --A-7-6 (23)--					
	493.3	--slow auger advancement from 84.0 to 85.5 feet-- --WEATHERED BEDROCK--		25	70/3"	> 4.50 P	20
85	491.8	Strong, light grayish gray, excellent quality, DOLOSTONE; moderately spaced, fresh, horizontal and vertical joints, with 0-0.2 inch opening, rough walls, and <0.2 inch thick sand infill. Run 1 : 85.5 to 95.5 feet Recovery=99% --RQD=95% --Q_u=8,670 psi	CORE				
90				26			
95	481.8	Boring terminated at 95.50 ft					
100							

GENERAL NOTES

Begin Drilling: 06-28-2019 Complete Drilling: 06-28-2019
Drilling Contractor: Wang Testing Services Drill Rig:
Driller: N&A Logger: F. Bozga Checked by: C. Marin
Drilling Method: 2.25" HSA to 10', mud rotary thereafter, boring backfilled upon completion

WATER LEVEL DATA

While Drilling: 39.00 ft
At Completion of Drilling: 9 ft Mud
Time After Drilling: NA
Depth to Water: NA

The stratification lines represent the approximate boundary between soil types; the actual transition may be gradual.

WANGENGINC 11000401.GPJ WANGENG.GDT 7/22/19

FILE PATH = pw:\\AECOM-NA-AWS1.aecomonline.local:AECOM_DS02_NA\Documents\01 Americas\Transportation\60269938 Circle\Phase II\000 CAD\006 Roadway\Sheets\62A77 Contracts\D162A77-SHT-AIS-BORING-04.dgn

AECOM
303 EAST WACKER DRIVE, SUITE 1400
CHICAGO, IL 60601-5276
PHONE: (312) 373-7700 FAX: (312) 373-6800

D162A77-SHT-AIS-BORING-04.dgn	DESIGNED -	REVISED -	
USER NAME = Jacqueline.Ng	DRAWN -	REVISED -	
PLOT SCALE = 2.0000 ' / in.	CHECKED -	REVISED -	
PLOT DATE = 1/30/2020	DATE - 1/29/2019	REVISED -	

STATE OF ILLINOIS
DEPARTMENT OF TRANSPORTATION

BORING LOGS IV

SCALE: NONE | SHEET 4 OF 19 SHEETS | STA. TO STA.

F.A.I. RTE.	SECTION	COUNTY	TOTAL SHEETS	SHEET NO.
90/94/290	2015-018R	COOK	1360	537

CONTRACT NO. 62A77

ILLINOIS FED. AID PROJECT

Wang Engineering
wangeng@wangeng.com
1145 N. Main Street
Lombard/IL/60148
Telephone: 6309539928
Fax: 6309539938

BORING LOG DBT-VST-01

WEI Job No.: 1100-04-01

Client: **AECOM**
Project: **Jane Byrne Interchange**
Location: **Section 17, T39N, R14E of 3rd PM**

Datum: NAVD 88
Elevation: 578.78 ft
North: 1896835.88 ft
East: 1171705.33 ft
Station: 6236+46.23
Offset: 93.46' LT

Profile	Elevation (ft)	SOIL AND ROCK DESCRIPTION	Depth (ft)	Sample Type / recovery	Sample No.	SPT Values (0w/6 in)	Qu (tsf)	Moisture Content (%)
		10-inch thick CONCRETE						
	578.0	--PAVEMENT--						
		Blind drill to 7.5 feet						
		--In-Situ Vane Shear, 7.5 feet--						
		--$S_{u\,undis}$ = 1335.9--						
		--$S_{u\,remold}$ = 817.8--						
		--Sensitivity = 1.63--						
		--In-Situ Vane Shear, 12.0 feet--						
		--$S_{u\,undis}$ = 905.0--						
		--$S_{u\,remold}$ = 603.3--						
		--Sensitivity = 1.50--						
		--In-Situ Vane Shear, 14.5 feet--						
		--$S_{u\,undis}$ = 797.2--						
		--$S_{u\,remold}$ = 409.4--						
		--Sensitivity = 1.95--						
		--In-Situ Vane Shear, 17.0 feet--						
		--$S_{u\,undis}$ = 883.4--						
		--$S_{u\,remold}$ = 474.0--						
		--Sensitivity = 1.86--						
		--In-Situ Vane Shear, 19.5 feet--						
		--$S_{u\,undis}$ = 775.7--						
		--$S_{u\,remold}$ = 409.4--						
		--Sensitivity = 1.89--						
		--In-Situ Vane Shear, 22.0 feet--						
		--$S_{u\,undis}$ = 969.6--						
		--$S_{u\,remold}$ = 538.7--						
		--Sensitivity = 1.80--						
		--In-Situ Vane Shear, 24.5 feet--						
		--$S_{u\,undis}$ = 689.5--						
		--$S_{u\,remold}$ = 387.8--						
		--Sensitivity = 1.78--						
		--In-Situ Vane Shear, 27.0 feet--						
		--$S_{u\,undis}$ = 1012.7--						
		--$S_{u\,remold}$ = 624.9--						
		--Sensitivity = 1.63--						
		--In-Situ Vane Shear, 29.5 feet--						
		--$S_{u\,undis}$ = 1034.2--						
		--$S_{u\,remold}$ = 646.4--						
		--Sensitivity = 1.60--						
		--In-Situ Vane Shear, 32.0 feet--						
		--$S_{u\,undis}$ = 1206.6--						
		--$S_{u\,remold}$ = 646.4--						
		--Sensitivity = 1.87--						
		--maxed out vane shear before failure--						

GENERAL NOTES				WATER LEVEL DATA	
Begin Drilling	06-25-2019	Complete Drilling	06-25-2019	While Drilling	26.00 ft
Drilling Contractor	Wang Testing Services	Drill Rig		At Completion of Drilling	DRY
Driller	N&A	Logger	F. Bozga	Time After Drilling	NA
Drilling Method	3.25" HSA, boring backfilled upon completion	Checked by	JAR	Depth to Water	NA

The stratification lines represent the approximate boundary between soil types; the actual transition may be gradual.

WANGENGINC 11000401.GPJ WANGENG.GDT 7/22/19

Wang Engineering
wangeng@wangeng.com
1145 N. Main Street
Lombard/IL/60148
Telephone: 6309539928
Fax: 6309539938

BORING LOG DBT-VST-01

WEI Job No.: 1100-04-01

Client: **AECOM**
Project: **Jane Byrne Interchange**
Location: **Section 17, T39N, R14E of 3rd PM**

Datum: NAVD 88
Elevation: 578.78 ft
North: 1896835.88 ft
East: 1171705.33 ft
Station: 6236+46.23
Offset: 93.46' LT

532.8
Boring terminated at 46.00 ft

GENERAL NOTES				WATER LEVEL DATA	
Begin Drilling	06-25-2019	Complete Drilling	06-25-2019	While Drilling	26.00 ft
Drilling Contractor	Wang Testing Services	Drill Rig		At Completion of Drilling	DRY
Driller	N&A	Logger	F. Bozga	Time After Drilling	NA
Drilling Method	3.25" HSA, boring backfilled upon completion	Checked by	JAR	Depth to Water	NA

The stratification lines represent the approximate boundary between soil types; the actual transition may be gradual.

WANGENGINC 11000401.GPJ WANGENG.GDT 7/22/19

Wang Engineering
wangeng@wangeng.com
1145 N. Main Street
Lombard/IL/60148
Telephone: 6309539928
Fax: 6309539938

BORING LOG 02-RWB-03

WEI Job No.: 1100-04-01

Client: **AECOM**
Project: **Jane Byrne Interchange**
Location: **Section 17, T39N, R14E of 3rd PM**

Datum: NAVD 88
Elevation: 578.12 ft
North: 1896571.20 ft
East: 1171842.41 ft
Station: 1815+41.45
Offset: 1.2416 LT

Profile	Elevation (ft)	SOIL AND ROCK DESCRIPTION	Depth (ft)	Sample Type / recovery	Sample No.	SPT Values (0w/6 in)	Qu (tsf)	Moisture Content (%)
		13.25-inch thick CONCRETE						
		--PAVEMENT--						
	577.0							
	576.6	4.25-inch thick ASPHALT						
		--PAVEMENT--						
		Dense, brown CRUSHED STONE			1	23 19 13	NP	8
		--BASE COURSE--						
	574.6							
		Medium stiff, gray SILTY CLAY LOAM, trace gravel			2	2 2 2	0.82 B	20
		--I_L(%)=30, P_L(%)=14--						
		--%Gravel=3.1--						
		--%Sand=26.3--						
		--%Silt=51.1--						
		--%Clay=19.5--						
		--A-6 (9)--			3	1 3 3	0.90 B	29
		--In-Situ Vane Shear, 8.0 feet--			1			
		--$S_{u\,undis}$ = 1447.0 psf--						
		--$S_{u\,remold}$ = 1034.0 psf--						
		--Sensitivity = 1.40--			4	1 2 3	0.74 B	22
	567.6							
		Very soft to soft, gray CLAY to SILTY CLAY, trace gravel			2			
		--In-Situ Vane Shear, 10.5 feet--						
		--$S_{u\,undis}$ = 1344.2 psf--						
		--$S_{u\,remold}$ = 930.6 psf--						
		--Sensitivity = 1.44--			5	0 1 2	0.33 B	25
		--In-Situ Vane Shear, 13.0 feet--			3			
		--$S_{u\,undis}$ = 1036.0 psf--						
		--$S_{u\,remold}$ = 673.4 psf--						
		--Sensitivity = 1.53--			6	0 1 1	0.25 B	24
		--In-Situ Vane Shear, 15.5 feet--			4			
		--$S_{u\,undis}$ = 958.3 psf--						
		--$S_{u\,remold}$ = 647.5 psf--						
		--Sensitivity = 1.48--			7	0 1 2	0.33 B	26
		--In-Situ Vane Shear, 18.0 feet--			5			
		--$S_{u\,undis}$ = 725.2 psf--						
		--$S_{u\,remold}$ = 621.6 psf--						
		--Sensitivity = 1.16--			9	0 1 1	0.16 B	26
		--In-Situ Vane Shear, 23.0 feet--			6			
		--$S_{u\,undis}$ = 984.2 psf--						
		--$S_{u\,remold}$ = 647.5 psf--						
		--Sensitivity = 1.52--			10	0 1 1	0.25 B	27
		--In-Situ Vane Shear, 25.5 feet--						
		--$S_{u\,undis}$ = 828.8 psf--						
		--$S_{u\,remold}$ = 673.4 psf--						
		--Sensitivity = 1.23--			7			
		--In-Situ Vane Shear, 28.0 feet--			11	1 1 2	0.41 B	27
		--$S_{u\,undis}$ = 751.1 psf--						
		--$S_{u\,remold}$ = 647.5 psf--						
		--Sensitivity = 1.16--			8			
		--In-Situ Vane Shear, 30.5 feet--			12	1 2 1	0.25 B	27
		--$S_{u\,undis}$ = 1191.4 psf--						
		--$S_{u\,remold}$ = 880.6 psf--						
		--Sensitivity = 1.35--			9			
		--In-Situ Vane Shear, 33.5 feet--						
		--$S_{u\,undis}$ = 1158.2 psf--						
		--$S_{u\,remold}$ = 880.6 psf--						
		--Sensitivity = 1.31--			13	1 3 5	0.41 B	27
	541.4							
		Medium dense to dense, gray SILT, trace gravel						
		--In-Situ Vane Shear, 38.0 feet--						
		--$S_{u\,undis}$ = 1158.2 psf--						
		--$S_{u\,remold}$ = 880.6 psf--						
		--Sensitivity = 1.31--			14	8 12 14	NA	

GENERAL NOTES				WATER LEVEL DATA	
Begin Drilling	06-06-2013	Complete Drilling	06-09-2013	While Drilling	DRY
Drilling Contractor	Wang Testing Services	Drill Rig		At Completion of Drilling	mud in the borehole
Driller	R&J	Logger	D. Kolpacki	Time After Drilling	NA
Drilling Method	2.25" HSA to 10', mud rotary thereafter, boring backfilled upon completion	Checked by	C. Marin	Depth to Water	NA

The stratification lines represent the approximate boundary between soil types; the actual transition may be gradual.

WANGENGINC 11000401.GPJ WANGENG.GDT 7/22/19

FILE PATH = pw:\\AECOM-NA-AWSimanonline.local:AECOM_DS02_NA\Documents\01 Americas\Transportation\60269938 Circle\Phase II\000.CAD\006.Roadway\Sheets\62A77 Contracts\D162A77-SHT-AIS-BORING-05.dgn

AECOM
303 EAST WACKER DRIVE, SUITE 1400
CHICAGO, IL 60601-5276
PHONE: (312) 373-7700 FAX: (312) 373-6800

D162A77-SHT-AIS-BORING-05.dgn	DESIGNED -	REVISED -
USER NAME = Jacqueline.Ng	DRAWN -	REVISED -
PLOT SCALE = 2.0000 ' / in.	CHECKED -	REVISED -
PLOT DATE = 1/30/2020	DATE - 1/29/2019	REVISED -

STATE OF ILLINOIS
DEPARTMENT OF TRANSPORTATION

BORING LOGS V

SCALE: NONE | SHEET 5 OF 19 SHEETS | STA. TO STA.

F.A.I. RTE.	SECTION	COUNTY	TOTAL SHEETS	SHEET NO.
90/94/290	2015-018R	COOK	1360	538

CONTRACT NO. 62A77

ILLINOIS FED. AID PROJECT

BORING LOG 02-RWB-03

Wang Engineering
wangeng@wangeng.com
1145 N. Main Street
Lombard/IL/60148
Telephone: 6309539928
Fax: 6309539938

WEI Job No.: 1100-04-01

Client: AECOM
Project: Jane Byrne Interchange
Location: Section 17, T39N, R14E of 3rd PM

Datum: NAVD 88
Elevation: 578.12 ft
North: 1896571.20 ft
East: 1171842.41 ft
Station: 1815+41.45
Offset: 1.2416 LT

Elevation (ft)	SOIL AND ROCK DESCRIPTION	Depth (ft)	Sample Type / Recovery	Sample No.	SPT Values (0w/6 in)	Qu (tsf)	Moisture Content (%)
	--%Gravel=4.4-- --%Sand=10.2-- --%Silt=80.9-- --%Clay=4.5-- --A-4 (0)--	45		15	12 23 24	NP	19
531.4	Hard, gray SILTY CLAY LOAM, trace gravel						
		50		16	7 15 23	5.74 B	15
524.1	Very dense, gray SILTY LOAM, trace gravel	55		17	11 36 29	NP	18
521.4	Stiff to very stiff, gray SILTY CLAY to SILTY CLAY LOAM, trace gravel						
		60		18	4 7 12	2.54 B	18
	--L_L(%)=37, P_L(%)=14-- --%Gravel=1.1-- --%Sand=11.1-- --%Silt=51.8-- --%Clay=36.1-- --A-6 (10)--	65		19	3 3 5	1.23 B	25
	--Trace SAND and SILT lenses--	70		20	5 6 7	1.15 B	25
506.4	Medium dense, gray SILTY LOAM						
503.1	Boring terminated at 75.00 ft	75		21	4 5 6	NP	26
		80					

GENERAL NOTES

Begin Drilling: 06-06-2013 Complete Drilling: 06-09-2013
Drilling Contractor: Wang Testing Services Drill Rig:
Driller: R&J Logger: D. Kolpacki Checked by: C. Marin
Drilling Method: 2.25" HSA to 10', mud rotary thereafter, boring backfilled upon completion

WATER LEVEL DATA

While Drilling: DRY
At Completion of Drilling: mud in the borehole
Time After Drilling: NA
Depth to Water: NA
The stratification lines represent the approximate boundary between soil types; the actual transition may be gradual.

WANGENGINC 1100401.GPJ WANGENG.GDT 7/2/19

BORING LOG 02-RWB-04

Wang Engineering
wangeng@wangeng.com
1145 N. Main Street
Lombard/IL/60148
Telephone: 6309539928
Fax: 6309539938

WEI Job No.: 1100-04-01

Client: AECOM
Project: Jane Byrne Interchange
Location: Section 17, T39N, R14E of 3rd PM

Datum: NAVD 88
Elevation: 579.37 ft
North: 1896646.03 ft
East: 1171838.48 ft
Station: 1816+16.38
Offset: 1.5665 LT

Elevation (ft)	SOIL AND ROCK DESCRIPTION	Depth (ft)	Sample Type / Recovery	Sample No.	SPT Values (0w/6 in)	Qu (tsf)	Moisture Content (%)
578.3	13.5-inch thick CONCRETE --PAVEMENT--						
577.94	-inch thick ASPHALT --PAVEMENT--						
	Dense, brown CRUSHED STONE --FILL--			1	15 17 23	NP	7
576.4	Stiff, gray SILTY CLAY LOAM, trace gravel	5		2	4 3 5	1.07 B	22
573.9	Very soft to medium stiff, gray CLAY to SILTY CLAY, trace gravel			3	1 1 3	0.33 B	21
		10		4	2 2 2	0.57 B	22
		15		5	1 1 1	0.25 B	23
				6	0 2 1	0.25 B	25
		20		7	0 0 2	0.25 B	28
				8	0 0 1	0.25 B	24
		25		9	0 0 2	0.16 B	27
				10	0 0 2	0.25 B	27
				11	0 2 2	0.33 B	26
		30		12	0 0 2	0.41 B	26
		35		13	1 1 2	< 0.25 P	27
542.6	Stiff to very stiff, gray SILTY CLAY, trace gravel						
		40		14	3 4 8	1.31 B	19

GENERAL NOTES

Begin Drilling: 06-04-2013 Complete Drilling: 06-04-2013
Drilling Contractor: Wang Testing Services Drill Rig:
Driller: R&J Logger: D. Kolpacki Checked by: C. Marin
Drilling Method: 2.25" HSA to 10', mud rotary thereafter, boring backfilled upon completion

WATER LEVEL DATA

While Drilling: Rotary wash
At Completion of Drilling: mud in the borehole
Time After Drilling: NA
Depth to Water: NA
The stratification lines represent the approximate boundary between soil types; the actual transition may be gradual.

WANGENGINC 1100401.GPJ WANGENG.GDT 7/2/19

BORING LOG 02-RWB-04

Wang Engineering
wangeng@wangeng.com
1145 N. Main Street
Lombard/IL/60148
Telephone: 6309539928
Fax: 6309539938

WEI Job No.: 1100-04-01

Client: AECOM
Project: Jane Byrne Interchange
Location: Section 17, T39N, R14E of 3rd PM

Datum: NAVD 88
Elevation: 579.37 ft
North: 1896646.03 ft
East: 1171838.48 ft
Station: 1816+16.38
Offset: 1.5665 LT

Elevation (ft)	SOIL AND ROCK DESCRIPTION	Depth (ft)	Sample Type / Recovery	Sample No.	SPT Values (0w/6 in)	Qu (tsf)	Moisture Content (%)
		45		15	5 10 13	3.36 B	23
532.6	Hard, gray SILTY LOAM to SILTY CLAY LOAM, trace gravel						
		50		16	12 15 27	9.84 B	13
527.6	Very stiff, gray SILTY CLAY, trace gravel						
	--L_L(%)=31, P_L(%)=15-- --%Gravel=1.0-- --%Sand=7.6-- --%Silt=58.9-- --%Clay=32.3-- --A-6 (13)--	55		17	12 18 21	3.94 B	22
522.6	Hard, gray SILTY LOAM, trace gravel						
		60		18	12 24 27	6.72 B	13
517.6	Medium dense, gray SANDY LOAM						
		65		19	7 11 15	NP	23
512.6	Hard, gray SILTY LOAM, trace gravel						
510.6	Boring terminated at 68.75 ft			20	50/3"	> 4.50 P	14
		70					
		75					
		80					

GENERAL NOTES

Begin Drilling: 06-04-2013 Complete Drilling: 06-04-2013
Drilling Contractor: Wang Testing Services Drill Rig:
Driller: R&J Logger: D. Kolpacki Checked by: C. Marin
Drilling Method: 2.25" HSA to 10', mud rotary thereafter, boring backfilled upon completion

WATER LEVEL DATA

While Drilling: Rotary wash
At Completion of Drilling: mud in the borehole
Time After Drilling: NA
Depth to Water: NA
The stratification lines represent the approximate boundary between soil types; the actual transition may be gradual.

WANGENGINC 1100401.GPJ WANGENG.GDT 7/2/19

FILE PATH = pw:\\AECOM-NA-AWS1.aecomonline.local:AECOM_DS02_NA\Documents\01 Americas\Transportation\60269938 Circle\Phase II\000 CAD\006_Roadway\Sheets\62A77 Contracts\D162A77-SHT-AIS-BORING-06.dgn

AECOM
303 EAST WACKER DRIVE, SUITE 1400
CHICAGO, IL 60601-5276
PHONE: (312) 373-7700 FAX: (312) 373-6800

D162A77-SHT-AIS-BORING-06.dgn	DESIGNED -	REVISED -
USER NAME = Jacqueline.Ng	DRAWN -	REVISED -
PLOT SCALE = 2.0000 ' / in.	CHECKED -	REVISED -
PLOT DATE = 1/30/2020	DATE - 1/29/2019	REVISED -

STATE OF ILLINOIS
DEPARTMENT OF TRANSPORTATION

BORING LOGS VI

SCALE: NONE | SHEET 6 OF 19 SHEETS | STA. TO STA.

F.A.I. RTE.	SECTION	COUNTY	TOTAL SHEETS	SHEET NO.
90/94/290	2015-018R	COOK	1360	539

CONTRACT NO. 62A77

ILLINOIS FED. AID PROJECT

BORING LOG 02-RWB-05

Wang Engineering
wangeng@wangeng.com
1145 N. Main Street
Lombard/IL/60148
Telephone: 6309539928
Fax: 6309539938

WEI Job No.: 1100-04-01

Client: AECOM
Project: Jane Byrne Interchange
Location: Section 17, T39N, R14E of 3rd PM

Datum: NAVD 88
Elevation: 580.79 ft
North: 1896721.51 ft
East: 1171834.02 ft
Station: 1816+91.99
Offset: 2.3899 LT

Elevation (ft)	SOIL AND ROCK DESCRIPTION	Depth (ft)	Sample Type / Recovery	Sample No.	SPT Values (6w/6 in)	Qu (tsf)	Moisture Content (%)
	13.5-inch thick CONCRETE --PAVEMENT--						
579.7							
579.3	4-inch thick ASPHALT --PAVEMENT--						
	Medium dense, brown CRUSHED STONE --FILL--			1	20 15 9	NP	2
577.8							
	Very stiff, gray SILTY CLAY LOAM, trace gravel	5		2	3 4 4	2.38 B	17
575.3							
	Very soft to soft, gray CLAY to SILTY CLAY, trace gravel			3	3 2 2	0.49 B	17
	--L_L(%)=34, P_L(%)=15-- --%Gravel=4.2-- --%Sand=17.7-- --%Silt=47.9-- --%Clay=30.2-- --A-6 (13)--	10		4	1 2 3	0.41 B	16
	--In-Situ Vane Shear, 10.5 feet-- --$S_{u\,undis}$ = 1217.3 psf-- --$S_{u\,remold}$ = 932.4 psf-- --Sensitivity = 1.30--			1 / 5	1 2 2	0.41 B	22
	--In-Situ Vane Shear, 13.0 feet-- --$S_{u\,undis}$ = 1036.0 psf-- --$S_{u\,remold}$ = 828.8 psf-- --Sensitivity =1.25--	15		2 / 6	2 2 3	0.33 B	25
	--In-Situ Vane Shear, 15.5 feet-- --$S_{u\,undis}$ = 1061.9 psf-- --$S_{u\,remold}$ = 700.0 psf-- --Sensitivity = 1.46--			3 / 7	1 1 2	0.33 B	25
	--In-Situ Vane Shear, 18.0 feet-- --$S_{u\,undis}$ = 751.1 psf-- --$S_{u\,remold}$ = 543.9 psf-- --Sensitivity = 1.38--	20		4 / 8	0 1 2	0.16 B	25
	--In-Situ Vane Shear, 20.5 feet-- --$S_{u\,undis}$ = 802.9 psf-- --$S_{u\,remold}$ = 595.7 psf-- --Sensitivity = 1.34--			5 / 9	0 2 1	0.25 B	26
	--In-Situ Vane Shear, 23.0 feet-- --$S_{u\,undis}$ = 1061.9 psf-- --$S_{u\,remold}$ = 699.3 psf-- --Sensitivity = 1.51 --	25		6 / 10	1 2 2	0.16 B	25
	--In-Situ Vane Shear, 25.5 feet-- --$S_{u\,undis}$ = 854.7 psf-- --$S_{u\,remold}$ = 595.7 psf-- --Sensitivity = 1.43--			7 / 11	1 2 2	0.33 B	25
	--In-Situ Vane Shear, 28.0 feet-- --$S_{u\,undis}$ = 984.2 psf-- --$S_{u\,remold}$ = 725.2 psf-- --Sensitivity = 1.35--	30		8 / 12	1 2 1	0.16 B	26
	--In-Situ Vane Shear, 30.5 feet-- --$S_{u\,undis}$ = 958.3 psf-- --$S_{u\,remold}$ = 751.1 psf-- --Sensitivity = 1.27--			9 / 13	2 2 2	0.49 B	26
	--In-Situ Vane Shear, 35.5 feet-- --$S_{u\,undis}$ = 1289.1 psf-- --$S_{u\,remold}$ = 984.2 psf-- --Sensitivity = 1.28--	35		10 / 14	1 2 10	<0.25 P	35
		40					

GENERAL NOTES

Begin Drilling: 06-09-2013 Complete Drilling: 06-11-2013
Drilling Contractor: Wang Testing Services Drill Rig:
Driller: R&T Logger: D. Kolpacki Checked by: C. Marin
Drilling Method: 2.25" HSA to 7.5', mud rotary thereafter, boring backfilled upon completion

WATER LEVEL DATA

While Drilling: DRY
At Completion of Drilling: mud in the borehole
Time After Drilling: NA
Depth to Water: NA

The stratification lines represent the approximate boundary between soil types; the actual transition may be gradual.

WANGENGINC 11000401.GPJ WANGENG.GDT 7/2/19

BORING LOG 02-RWB-05

Wang Engineering
wangeng@wangeng.com
1145 N. Main Street
Lombard/IL/60148
Telephone: 6309539928
Fax: 6309539938

WEI Job No.: 1100-04-01

Client: AECOM
Project: Jane Byrne Interchange
Location: Section 17, T39N, R14E of 3rd PM

Datum: NAVD 88
Elevation: 580.79 ft
North: 1896721.51 ft
East: 1171834.02 ft
Station: 1816+91.99
Offset: 2.3899 LT

Elevation (ft)	SOIL AND ROCK DESCRIPTION	Depth (ft)	Sample Type / Recovery	Sample No.	SPT Values (6w/6 in)	Qu (tsf)	Moisture Content (%)
539.0							
	Very stiff to hard, gray SILTY LOAM, trace gravel						
		45		15	9 10 11	4.51 S	13
	--L_L(%)=26, P_L(%)=13-- --%Gravel=5.0-- --%Sand=26.3-- --%Silt=55.4-- --%Clay=13.3-- --A-6 (6)--	50		16	13 14 23	6.31 S	12
	--Dense, gray SILT--	55		17	17 21 27	NP	21
		60		18	11 14 16	2.79 S	12
519.0	Medium dense, gray fine SANDY LOAM, trace silt lenses						
	--%Gravel=0.1-- --%Sand=75.9-- --%Silt=23.0-- --%Clay=1.0-- --A-2-4 (0)--	65		19	10 11 10	NP	20
514.0	Hard, gray SILTY LOAM, trace gravel						
		70		20	14 18 29	8.45 S	13
		75		21	50/5	> 4.50 P	9
504.0	Hard, gray CLAY						
		80		22	13 18 12	5.00 S	22

GENERAL NOTES

Begin Drilling: 06-09-2013 Complete Drilling: 06-11-2013
Drilling Contractor: Wang Testing Services Drill Rig:
Driller: R&T Logger: D. Kolpacki Checked by: C. Marin
Drilling Method: 2.25" HSA to 7.5', mud rotary thereafter, boring backfilled upon completion

WATER LEVEL DATA

While Drilling: DRY
At Completion of Drilling: mud in the borehole
Time After Drilling: NA
Depth to Water: NA

The stratification lines represent the approximate boundary between soil types; the actual transition may be gradual.

WANGENGINC 11000401.GPJ WANGENG.GDT 7/2/19

BORING LOG 02-RWB-05

Wang Engineering
wangeng@wangeng.com
1145 N. Main Street
Lombard/IL/60148
Telephone: 6309539928
Fax: 6309539938

WEI Job No.: 1100-04-01

Client: AECOM
Project: Jane Byrne Interchange
Location: Section 17, T39N, R14E of 3rd PM

Datum: NAVD 88
Elevation: 580.79 ft
North: 1896721.51 ft
East: 1171834.02 ft
Station: 1816+91.99
Offset: 2.3899 LT

Elevation (ft)	SOIL AND ROCK DESCRIPTION	Depth (ft)	Sample Type / Recovery	Sample No.	SPT Values (6w/6 in)	Qu (tsf)	Moisture Content (%)
499.0							
	Hard, gray SILTY LOAM, trace gravel						
		85		23	50/5	> 4.50 P	16
	--HARD DRILLING (at 88')-- --Possible Cobbles--						
492.8							
	Boring terminated at 88.00 ft						
		90					
		95					
		100					

GENERAL NOTES

Begin Drilling: 06-09-2013 Complete Drilling: 06-11-2013
Drilling Contractor: Wang Testing Services Drill Rig:
Driller: R&T Logger: D. Kolpacki Checked by: C. Marin
Drilling Method: 2.25" HSA to 7.5', mud rotary thereafter, boring backfilled upon completion

WATER LEVEL DATA

While Drilling: DRY
At Completion of Drilling: mud in the borehole
Time After Drilling: NA
Depth to Water: NA

The stratification lines represent the approximate boundary between soil types; the actual transition may be gradual.

WANGENGINC 11000401.GPJ WANGENG.GDT 7/2/19

FILE PATH = pw:\\AECOM-NA-AWS1.aecomonline.local:AECOM_DS02_NA\Documents\01 Americas\Transportation\60269938 Circle\Phase_II\000_CAD\006_Roadway\Sheets\62A77 Contracts\D162A77-SHT-AIS-BORING-07.dgn

AECOM
303 EAST WACKER DRIVE, SUITE 1400
CHICAGO, IL 60601-5276
PHONE: (312) 373-7700 FAX: (312) 373-6800

D162A77-SHT-AIS-BORING-07.dgn	DESIGNED -	REVISED -	
USER NAME = Jacqueline.Ng	DRAWN -	REVISED -	
PLOT SCALE = 2.0000 ' / in.	CHECKED -	REVISED -	
PLOT DATE = 1/30/2020	DATE - 1/29/2019	REVISED -	

STATE OF ILLINOIS
DEPARTMENT OF TRANSPORTATION

BORING LOGS VII

SCALE: NONE | SHEET 7 OF 19 SHEETS | STA. TO STA.

F.A.I. RTE.	SECTION	COUNTY	TOTAL SHEETS	SHEET NO.
90/94/290	2015-018R	COOK	1360	540

CONTRACT NO. 62A77

ILLINOIS FED. AID PROJECT

Wang Engineering
wangeng@wangeng.com
1145 N. Main Street
Lombard/IL/60148
Telephone: 6309539928
Fax: 6309539938

BORING LOG 02-RWB-06

WEI Job No.: 1100-04-01

Client: **AECOM**
Project: **Jane Byrne Interchange**
Location: **Section 17, T39N, R14E of 3rd PM**

Datum: NAVD 88
Elevation: 581.64 ft
North: 1896796.97 ft
East: 1171829.83 ft
Station: 1817+67.50
Offset: 3.6732 LT

Elevation (ft)	SOIL AND ROCK DESCRIPTION	Depth (ft)	Sample Type / Recovery	Sample No.	SPT Values (0w/6 in)	Qu (tsf)	Moisture Content (%)
	13.75-inch thick CONCRETE --PAVEMENT--						
580.4	14-inch thick ASPHALT --PAVEMENT--						
579.8	6-inch thick CRUSHED STONE --BASE COURSE--						
578.4	Very stiff (2.75P), gray and brown CLAY LOAM, trace gravel --FILL--			1	11 20 27	NP	5
	Medium stiff to stiff, gray and brown SILTY CLAY LOAM, trace gravel	5		2	1 4 5	1.80 B	18
	--L_L(%)=26, P_L(%)=13-- --%Gravel=4.2-- --%Sand=22.5-- --%Silt=49.7-- --%Clay=23.6-- --A-6 (7)--			3	3 3 4	1.23 B	17
		10		4	2 2 3	0.90 B	23
				5	2 2 3	1.07 B	25
568.6	Very soft to soft, gray CLAY to SILTY CLAY, trace gravel			6	1 2 2	0.41 B	24
		15		7	1 1 2	0.33 B	25
		20		8	1 1 2	0.41 B	26
	--L_L(%)=36, P_L(%)=16-- --%Gravel=2.8-- --%Sand=16.1-- --%Silt=51.5-- --%Clay=29.7-- --A-6 (15)--	25		9	1 1 2	0.41 B	26
				10	1 2 3	< 0.25 P	27
		30		11	1 1 2	0.25 B	25
				12	0 1 2	0.16 B	26
		35		13	0 2 2	0.33 B	25
		40		14	1 2 3	0.41 B	28

GENERAL NOTES

Begin Drilling: **06-16-2013** Complete Drilling: **06-17-2013**
Drilling Contractor: **Wang Testing Services** Drill Rig:
Driller: **P&N** Logger: **A. Happel** Checked by: **C. Marin**
Drilling Method: **2.25" HSA to 10', mud rotary thereafter, boring backfilled upon completion**

WATER LEVEL DATA

While Drilling: **Rotary wash**
At Completion of Drilling: **mud in the borehole**
Time After Drilling: **NA**
Depth to Water: **NA**

The stratification lines represent the approximate boundary between soil types; the actual transition may be gradual.

Wang Engineering
wangeng@wangeng.com
1145 N. Main Street
Lombard/IL/60148
Telephone: 6309539928
Fax: 6309539938

BORING LOG 02-RWB-06

WEI Job No.: 1100-04-01

Client: **AECOM**
Project: **Jane Byrne Interchange**
Location: **Section 17, T39N, R14E of 3rd PM**

Datum: NAVD 88
Elevation: 581.64 ft
North: 1896796.97 ft
East: 1171829.83 ft
Station: 1817+67.50
Offset: 3.6732 LT

Elevation (ft)	SOIL AND ROCK DESCRIPTION	Depth (ft)	Sample Type / Recovery	Sample No.	SPT Values (0w/6 in)	Qu (tsf)	Moisture Content (%)
539.9	Stiff to very stiff, gray SILTY CLAY LOAM, trace gravel						
		45		15	13 13 13	1.23 B	16
		50		16	14 16 20	3.12 B	15
527.1	Gray SANDY GRAVEL	55		17	17 21 48	3.44 B	11
524.9	Gray SILT						
522.6	Hard, gray SILTY CLAY, trace gravel	60		18	20 26 23	6.15 B	20
519.9	Medium dense, gray GRAVELLY SANDY LOAM						
	--%Gravel=35.8-- --%Sand=43.9-- --%Silt=17.7-- --%Clay=2.6-- --A-1-b (0)--	65		19	14 15 14	NP	13
512.6	Hard (4.5P), gray SILTY CLAY LOAM	70		20	12 13 20	NP	11
508.0	Gray SANDY GRAVEL						
507.5	Hard, gray SILTY CLAY to SILTY CLAY LOAM, trace gravel	75		21	17 50/5	4.10 B	10
		80		22	21 20 28	6.56 B	20

GENERAL NOTES

Begin Drilling: **06-16-2013** Complete Drilling: **06-17-2013**
Drilling Contractor: **Wang Testing Services** Drill Rig:
Driller: **P&N** Logger: **A. Happel** Checked by: **C. Marin**
Drilling Method: **2.25" HSA to 10', mud rotary thereafter, boring backfilled upon completion**

WATER LEVEL DATA

While Drilling: **Rotary wash**
At Completion of Drilling: **mud in the borehole**
Time After Drilling: **NA**
Depth to Water: **NA**

The stratification lines represent the approximate boundary between soil types; the actual transition may be gradual.

Wang Engineering
wangeng@wangeng.com
1145 N. Main Street
Lombard/IL/60148
Telephone: 6309539928
Fax: 6309539938

BORING LOG 02-RWB-06

WEI Job No.: 1100-04-01

Client: **AECOM**
Project: **Jane Byrne Interchange**
Location: **Section 17, T39N, R14E of 3rd PM**

Datum: NAVD 88
Elevation: 581.64 ft
North: 1896796.97 ft
East: 1171829.83 ft
Station: 1817+67.50
Offset: 3.6732 LT

Elevation (ft)	SOIL AND ROCK DESCRIPTION	Depth (ft)	Sample Type / Recovery	Sample No.	SPT Values (0w/6 in)	Qu (tsf)	Moisture Content (%)
	--L_L(%)=40, P_L(%)=15-- --%Gravel=4.2-- --%Sand=7.2-- --%Silt=48.6-- --%Clay=40.0-- --A-6 (22)--	85		23	13 22 50/5	8.61 B	10
	--HARD DRILLING (at 86')-- --Possible Cobbles--	90		24	30 36 50/5	> 4.50 P	12
490.6	--HARD DRILLING-- --WEATHERED BEDROCK--						
489.6	Strong, excellent rock quality, light gray, fresh, joint breaks with little to no infill, slightly vuggy DOLOSTONE		CORE				
	--Run 1-RECOVERY=100%-- --RQD=95%--	95		1		NP	
	--Run 2-RECOVERY=100%-- --RQD=97%--	105	CORE	2		NP	
469.6	Boring terminated at 112.00 ft	110					
		115					
		120					

GENERAL NOTES

Begin Drilling: **06-16-2013** Complete Drilling: **06-17-2013**
Drilling Contractor: **Wang Testing Services** Drill Rig:
Driller: **P&N** Logger: **A. Happel** Checked by: **C. Marin**
Drilling Method: **2.25" HSA to 10', mud rotary thereafter, boring backfilled upon completion**

WATER LEVEL DATA

While Drilling: **Rotary wash**
At Completion of Drilling: **mud in the borehole**
Time After Drilling: **NA**
Depth to Water: **NA**

The stratification lines represent the approximate boundary between soil types; the actual transition may be gradual.

WANGENGINC 11000401.GPJ WANGENG.GDT 7/2/19

BORING LOG 10-PZ-01

Wang Engineering
wangeng@wangeng.com
1145 N. Main Street
Lombard/IL/60148
Telephone: 6309539928
Fax: 6309539938

WEI Job No.: 1100-04-01

Client: AECOM
Project: Jane Byrne Interchange
Location: Section 17, T39N, R14E of 3rd PM

Datum: NAVD 88
Elevation: 592.93 ft
North: 1897019.14 ft
East: 1171462.69 ft
Station: 7315+23.85
Offset: 4.45 LT

Profile	Elevation (ft)	SOIL AND ROCK DESCRIPTION	Depth (ft)	Sample Type / Recovery	Sample No.	SPT Values (0w/6 in)	Qu (tsf)	Moisture Content (%)
		--Drilled without sampling--	5, 10, 15, 20					
		Piezometer Data: --Installed in Dec. 11, 2014 --Bentonite Seal 66 to 71 feet --Top of Sand Pack at 71 feet --Top of Screen at 73 feet --Screen Length 20 feet --Bottom of Screen at 93 feet	25, 30, 35, 40					

GENERAL NOTES

Begin Drilling: 12-10-2014 Complete Drilling: 12-11-2014
Drilling Contractor: Wang Testing Services Drill Rig:
Driller: P&P Logger: A. Happel Checked by: C. Marin
Drilling Method: 4.25" HSA, monitoring water well; pizometer installed on 12/11/2014

WATER LEVEL DATA

While Drilling: 68.00 ft
At Completion of Drilling: 74.00 ft
Time After Drilling: 24 hours
Depth to Water: 45.04 ft
The stratification lines represent the approximate boundary between soil types; the actual transition may be gradual.

WANGENGINC 11000401.GPJ WANGENG.GDT 7/2/19

BORING LOG 10-PZ-01

Wang Engineering
wangeng@wangeng.com
1145 N. Main Street
Lombard/IL/60148
Telephone: 6309539928
Fax: 6309539938

WEI Job No.: 1100-04-01

Client: AECOM
Project: Jane Byrne Interchange
Location: Section 17, T39N, R14E of 3rd PM

Datum: NAVD 88
Elevation: 592.93 ft
North: 1897019.14 ft
East: 1171462.69 ft
Station: 7315+23.85
Offset: 4.45 LT

Profile	Elevation (ft)	SOIL AND ROCK DESCRIPTION	Depth (ft)	Sample Type / Recovery	Sample No.	SPT Values (0w/6 in)	Qu (tsf)	Moisture Content (%)
		--piezometer stabilized water level reading -- --reading during well development (12/15/2014) = 43.85 feet bgs-- --reading date: 12/26/2014 = 43.72 feet bgs--	45, 50, 55, 60					
	521.2	Very dense, gray SILTY LOAM --Wet--	65, 70, 75		1	18 27 24	1.00 P	18
	516.2	Very dense, gray SANDY LOAM, trace to little gravel --Saturated--	80		2	7 14 16	NP	20
		Piezometer Data: --Installed in Dec. 11, 2014 --Bentonite Seal 66 to 71 feet --Top of Sand Pack at 71 feet --Top of Screen at 73 feet --Screen Length 20 feet --Bottom of Screen at 93 feet						

GENERAL NOTES

Begin Drilling: 12-10-2014 Complete Drilling: 12-11-2014
Drilling Contractor: Wang Testing Services Drill Rig:
Driller: P&P Logger: A. Happel Checked by: C. Marin
Drilling Method: 4.25" HSA, monitoring water well; pizometer installed on 12/11/2014

WATER LEVEL DATA

While Drilling: 68.00 ft
At Completion of Drilling: 74.00 ft
Time After Drilling: 24 hours
Depth to Water: 45.04 ft
The stratification lines represent the approximate boundary between soil types; the actual transition may be gradual.

WANGENGINC 11000401.GPJ WANGENG.GDT 7/2/19

BORING LOG 10-PZ-01

Wang Engineering
wangeng@wangeng.com
1145 N. Main Street
Lombard/IL/60148
Telephone: 6309539928
Fax: 6309539938

WEI Job No.: 1100-04-01

Client: AECOM
Project: Jane Byrne Interchange
Location: Section 17, T39N, R14E of 3rd PM

Datum: NAVD 88
Elevation: 592.93 ft
North: 1897019.14 ft
East: 1171462.69 ft
Station: 7315+23.85
Offset: 4.45 LT

Profile	Elevation (ft)	SOIL AND ROCK DESCRIPTION	Depth (ft)	Sample Type / Recovery	Sample No.	SPT Values (0w/6 in)	Qu (tsf)	Moisture Content (%)
			85		3	50/6	NP	16
	506.2	Very dense, gray SILTY LOAM, trace gravel --Moist--	90		4	50/3	4.50 P	9
		--Wet--			5	60/5	NP	11
	497.9	--HARD DRILLING-- Boring terminated at 95.00 ft	95, 100					

GENERAL NOTES

Begin Drilling: 12-10-2014 Complete Drilling: 12-11-2014
Drilling Contractor: Wang Testing Services Drill Rig:
Driller: P&P Logger: A. Happel Checked by: C. Marin
Drilling Method: 4.25" HSA, monitoring water well; pizometer installed on 12/11/2014

WATER LEVEL DATA

While Drilling: 68.00 ft
At Completion of Drilling: 74.00 ft
Time After Drilling: 24 hours
Depth to Water: 45.04 ft
The stratification lines represent the approximate boundary between soil types; the actual transition may be gradual.

WANGENGINC 11000401.GPJ WANGENG.GDT 7/2/19

FILE PATH = pw:\\AECOM-NA-AWS1.aecomonline.local:AECOM_DS02_NA\Documents\01 Americas\Transportation\60269938 Circle\Phase_II\002.CAD\006.Roadway\Sheets\62A77 Contracts\D162A77-SHT-AIS-BORING-09.dgn

AECOM
303 EAST WACKER DRIVE, SUITE 1400
CHICAGO, IL 60601-5276
PHONE: (312) 373-7700 FAX: (312) 373-6800

D162A77-SHT-AIS-BORING-09.dgn	DESIGNED -	REVISED -	
USER NAME = Jacqueline.Ng	DRAWN -	REVISED -	
PLOT SCALE = 2.0000 ' / in.	CHECKED -	REVISED -	
PLOT DATE = 1/30/2020	DATE - 1/29/2019	REVISED -	

STATE OF ILLINOIS
DEPARTMENT OF TRANSPORTATION

BORING LOGS IX

SCALE: NONE | SHEET 9 OF 19 SHEETS | STA. TO STA.

F.A.I. RTE.	SECTION	COUNTY	TOTAL SHEETS	SHEET NO.
90/94/290	2015-018R	COOK	1360	542

CONTRACT NO. 62A77

ILLINOIS FED. AID PROJECT

BORING LOG 10-RWB-04

Wang Engineering
wangeng@wangeng.com
1145 N. Main Street
Lombard/IL/60148
Telephone: 6309539928
Fax: 6309539938

WEI Job No.: 1100-04-01

Client: AECOM
Project: Jane Byrne Interchange
Location: Section 17, T39N, R14E of 3rd PM

Datum: NAVD 88
Elevation: 593.40 ft
North: 1896930.29 ft
East: 1171484.09 ft
Station: 7315+75.12
Offset: 1.47 RT

Elevation (ft)	SOIL AND ROCK DESCRIPTION	Depth (ft)	Sample Type / Recovery	Sample No.	SPT Values (6w/6 in)	Qu (tsf)	Moisture Content (%)
592.9	6-inch thick ASPHALT --PAVEMENT--						
	Dense, brown GRAVELLY LOAM --BASE COURSE--		X	1	29 29 20	NP	16
590.4	Very loose to medium dense, brown, coarse SAND --Dry to saturated-- --FILL--	5	X	2	6 9 7	NP	4
			X	3	3 3 4	NP	16
		10	X	4	4 8 6	NP	6
			X	5	3 2 3	NP	7
		15	X	6	2 2 1	NP	15
577.9	Medium dense, gray GRAVELLY SAND --Wet--		X	7	3 7 9	NP	8
574.4	Very soft to medium stiff, gray CLAY to SILTY CLAY, trace gravel	20	X	8	10 3 2	0.33 B	22
		25	X	9	0 0 1	0.08 B	36
			X	10	1 1 2	0.25 P	17
			○	11	0 0 2	0.33 N/6	
		30	X	12	1 1 1	0.16 B	27
		35	X	13	0 0 2	< 0.25 P	26
		40	X	14	1 2 3	< 0.25 P	27

GENERAL NOTES

Begin Drilling: 03-10-2014 Complete Drilling: 03-13-2014
Drilling Contractor: Wang Testing Services Drill Rig:
Driller: P&N Logger: F. Bozga Checked by: C. Marin
Drilling Method: 2.25" SSA to 15', mud rotary thereafter, boring backfilled upon completion

WATER LEVEL DATA

While Drilling ▽ 13.00 ft
At Completion of Drilling ▼ mud in the borehole
Time After Drilling: 72 hours
Depth to Water ▼ 35.00 ft
The stratification lines represent the approximate boundary between soil types; the actual transition may be gradual.

BORING LOG 10-RWB-04

Wang Engineering
wangeng@wangeng.com
1145 N. Main Street
Lombard/IL/60148
Telephone: 6309539928
Fax: 6309539938

WEI Job No.: 1100-04-01

Client: AECOM
Project: Jane Byrne Interchange
Location: Section 17, T39N, R14E of 3rd PM

Datum: NAVD 88
Elevation: 593.40 ft
North: 1896930.29 ft
East: 1171484.09 ft
Station: 7315+75.12
Offset: 1.47 RT

Elevation (ft)	SOIL AND ROCK DESCRIPTION	Depth (ft)	Sample Type / Recovery	Sample No.	SPT Values (6w/6 in)	Qu (tsf)	Moisture Content (%)
	--%Silt=51.5-- --%Clay=17.2-- --A-4 (4)--						
531.7	Very stiff, gray SILTY CLAY LOAM, trace gravel						
		45	X	15	4 4 4	0.75 P	27
528.9	Dense to very dense, gray, medium to coarse SAND, trace gravel --Wet--	50	X	16	1 3 6	0.57 B	26
541.7	Hard, gray SILTY LOAM, trace gravel	55	X	17	15 50/3"	6.15 S	14
	--L_L(%)=24, P_L(%)=14-- --%Gravel=4.5-- --%Sand=26.8--	60	X	18	18 19 27	7.71 B	13
		65	X	19	7 11 19	3.61 B	15
		70	X	20	14 22 20	NP	16
		75	X	21	16 17 36	NP	11
		80	X	22	16 18 20	NP	11

GENERAL NOTES

Begin Drilling: 03-10-2014 Complete Drilling: 03-13-2014
Drilling Contractor: Wang Testing Services Drill Rig:
Driller: P&N Logger: F. Bozga Checked by: C. Marin
Drilling Method: 2.25" SSA to 15', mud rotary thereafter, boring backfilled upon completion

WATER LEVEL DATA

While Drilling ▽ 13.00 ft
At Completion of Drilling ▼ mud in the borehole
Time After Drilling: 72 hours
Depth to Water ▼ 35.00 ft
The stratification lines represent the approximate boundary between soil types; the actual transition may be gradual.

BORING LOG 10-RWB-04

Wang Engineering
wangeng@wangeng.com
1145 N. Main Street
Lombard/IL/60148
Telephone: 6309539928
Fax: 6309539938

WEI Job No.: 1100-04-01

Client: AECOM
Project: Jane Byrne Interchange
Location: Section 17, T39N, R14E of 3rd PM

Datum: NAVD 88
Elevation: 593.40 ft
North: 1896930.29 ft
East: 1171484.09 ft
Station: 7315+75.12
Offset: 1.47 RT

Elevation (ft)	SOIL AND ROCK DESCRIPTION	Depth (ft)	Sample Type / Recovery	Sample No.	SPT Values (6w/6 in)	Qu (tsf)	Moisture Content (%)
	--HARD DRILLING-- --Possible Cobbles--						
511.7	Very dense, gray GRAVELLY SAND --Wet--	85	X	23	45 50/5"	NP	10
	-HARD DRILLING up to 89.5 ft- --Possible Cobbles--		□	24	50/2"	NP	
503.9	Hard, gray SILTY LOAM, trace to little gravel --Dry--	95	X	25	70/5"	> 4.50 P	9
	--HARD DRILLING at 97 ft-- --Possible Cobbles--						
496.4	--WEATHERED BEDROCK-- --HARD DRILLING--	100	○	26	75/3"	NP	
492.4	Strong, light gray, fair rock mass quality, bedded fresh DOLOSTONE, up to 19-inch beds, 11-inch joint spacing, horizontal and vertical joints with none to more than 0.2-inch greenish gray infilling, hard joint wall, with stylolitic surfaces, and moderately vuggy porosity. --Run 1 - RECOVERY=96%-- --RQD=71%--	105					
482.4	Boring terminated at 111.00 ft	110					
		115					
		120					

CORE 1

GENERAL NOTES

Begin Drilling: 03-10-2014 Complete Drilling: 03-13-2014
Drilling Contractor: Wang Testing Services Drill Rig:
Driller: P&N Logger: F. Bozga Checked by: C. Marin
Drilling Method: 2.25" SSA to 15', mud rotary thereafter, boring backfilled upon completion

WATER LEVEL DATA

While Drilling ▽ 13.00 ft
At Completion of Drilling ▼ mud in the borehole
Time After Drilling: 72 hours
Depth to Water ▼ 35.00 ft
The stratification lines represent the approximate boundary between soil types; the actual transition may be gradual.

WANGENGINC 11000401.GPJ WANGENG.GDT 7/2/19

FILE PATH = pw:\\AECOM-NA-AWSieecomonline.local:AECOM_DS02_NA\Documents\01 Americas\Transportation\60269938 Circle\Phase_II\000_CAD\006_Roadway\Sheets\62A77 Contract\D162A77-SHT-AIS-BORING-10.dgn

AECOM
303 EAST WACKER DRIVE, SUITE 1400
CHICAGO, IL 60601-5276
PHONE: (312) 373-7700 FAX: (312) 373-6800

D162A77-SHT-AIS-BORING-10.dgn	DESIGNED -	REVISED -
USER NAME = Jacqueline.Ng	DRAWN -	REVISED -
PLOT SCALE = 2.0000 ' / in.	CHECKED -	REVISED -
PLOT DATE = 1/30/2020	DATE - 1/29/2019	REVISED -

STATE OF ILLINOIS
DEPARTMENT OF TRANSPORTATION

BORING LOGS X

SCALE: NONE | SHEET 10 OF 19 SHEETS | STA. TO STA.

F.A.I. RTE.	SECTION	COUNTY	TOTAL SHEETS	SHEET NO.
90/94/290	2015-018R	COOK	1360	543

CONTRACT NO. 62A77
ILLINOIS FED. AID PROJECT

BORING LOG 10-RWB-05

Wang Engineering
wangeng@wangeng.com
1145 N. Main Street
Lombard/IL/60148
Telephone: 6309539928
Fax: 6309539938

WEI Job No.: 1100-04-01

Client: AECOM
Project: Jane Byrne Interchange
Location: Section 17, T39N, R14E of 3rd PM

Datum: NAVD 88
Elevation: 580.22 ft
North: 1896756.05 ft
East: 1171508.19 ft
Station: 6236+85.54
Offset: 115.5731 RT

Elevation (ft)	SOIL AND ROCK DESCRIPTION	Depth (ft)	Sample Type	Recovery	Sample No.	SPT Values (6w/6 in)	Qu (tsf)	Moisture Content (%)
579.94	4-inch thick ASPHALT --PAVEMENT--							
578.7	14-inch thick CONCRETE --PAVEMENT--							
	Very dense, grayish white SANDY GRAVEL --FILL--		X		1	12 28 33	NP	5
576.2	Very soft to medium stiff, gray CLAY to SILTY CLAY, trace gravel	5	X		2	4 2 2	0.74 B	24
			X		3	1 2 2	0.60 P	20
		10	X		4	0 1 2	0.41 B	23
			X		5	0 0 0	0.25 B	26
		15	X		6	0 0 0	0.25 B	26
			X		7	0 0 2	< 0.25 P	29
		20	X		8	0 0 1	< 0.25 P	31
543.5	Medium dense, SILTY LOAM, trace gravel							
			X		9	0 0 0	0.33 B	27
		25	X		10	0 1 1	0.25 B	27
			X		11	0 1 2	< 0.25 P	26
		30	X		12	0 0 2	0.41 B	27
		35	X		13	1 2 2	< 0.25 P	32
		40	X		14	5 7 14	NP	24

GENERAL NOTES

Begin Drilling: 07-31-2014 Complete Drilling: 07-31-2014
Drilling Contractor: Wang Testing Services Drill Rig:
Driller: R&J Logger: S. Woods Checked by: C. Marin
Drilling Method: 2.25" SSA to 15', mud rotary thereafter, boring backfilled upon completion

WATER LEVEL DATA

While Drilling: 59.50 ft
At Completion of Drilling: mud in the borehole
Time After Drilling: NA
Depth to Water: NA
The stratification lines represent the approximate boundary between soil types; the actual transition may be gradual.

WANGENGINC 11000401.GPJ WANGENG.GDT 7/2/19

BORING LOG 10-RWB-05

Wang Engineering
wangeng@wangeng.com
1145 N. Main Street
Lombard/IL/60148
Telephone: 6309539928
Fax: 6309539938

WEI Job No.: 1100-04-01

Client: AECOM
Project: Jane Byrne Interchange
Location: Section 17, T39N, R14E of 3rd PM

Datum: NAVD 88
Elevation: 580.22 ft
North: 1896756.05 ft
East: 1171508.19 ft
Station: 6236+85.54
Offset: 115.5731 RT

Elevation (ft)	SOIL AND ROCK DESCRIPTION	Depth (ft)	Sample Type	Recovery	Sample No.	SPT Values (6w/6 in)	Qu (tsf)	Moisture Content (%)
538.5	Hard, gray SILTY CLAY, trace gravel							
		45	X		15	6 13 29	7.13 B	18
533.5	Very dense, gray SILTY LOAM, trace gravel							
		50	X		16	11 27 39	NP	11
525.7	Medium dense to dense, gray, fine SAND, trace gravel							
		55	X		17	12 18 24	NP	15
		60	X		18	10 11 14	NP	23
515.7	Dense, gray SILTY LOAM, trace gravel							
515.2	Boring terminated at 65.00 ft	65	X		19	19 25 18	NP	12
		70						
		75						
		80						

GENERAL NOTES

Begin Drilling: 07-31-2014 Complete Drilling: 07-31-2014
Drilling Contractor: Wang Testing Services Drill Rig:
Driller: R&J Logger: S. Woods Checked by: C. Marin
Drilling Method: 2.25" SSA to 15', mud rotary thereafter, boring backfilled upon completion

WATER LEVEL DATA

While Drilling: 59.50 ft
At Completion of Drilling: mud in the borehole
Time After Drilling: NA
Depth to Water: NA
The stratification lines represent the approximate boundary between soil types; the actual transition may be gradual.

WANGENGINC 11000401.GPJ WANGENG.GDT 7/2/19

BORING LOG 10-RWB-06

Wang Engineering
wangeng@wangeng.com
1145 N. Main Street
Lombard/IL/60148
Telephone: 6309539928
Fax: 6309539938

WEI Job No.: 1100-04-01

Client: AECOM
Project: Jane Byrne Interchange
Location: Section 17, T39N, R14E of 3rd PM

Datum: NAVD 88
Elevation: 578.32 ft
North: 1896599.90 ft
East: 1171526.13 ft
Station: 7319+07.86
Offset: 10.6588 RT

Elevation (ft)	SOIL AND ROCK DESCRIPTION	Depth (ft)	Sample Type	Recovery	Sample No.	SPT Values (6w/6 in)	Qu (tsf)	Moisture Content (%)
	24-inch thick, CONCRETE --PAVEMENT--							
576.3	Dense, white CRUSHED STONE --BASE COURSE--		X		1	28 27 12	NP	4
574.9	Stiff, brown and gray SILTY CLAY LOAM, trace gravel --FILL--	5	X		2	2 3 4	1.23 B	23
572.8	Soft, gray SILTY CLAY LOAM, trace gravel		X		3	0 1 2	0.41 B	18
570.3	Very soft to soft, gray CLAY	10	X		4	1 1 2	0.25 B	25
			X		5	0 0 2	0.25 B	26
		15	X		6	0 0 0	NR	
			X		7	0 0 0	0.16 B	24
		20	X		8	0 0 2	0.16 B	24
549.3	Medium stiff, gray SILTY CLAY							
			X		9	0 0 1	0.25 B	25
		25	X		10	0 0 1	0.25 B	22
			X		11	0 0 2	0.41 B	23
		30	X		12	0 1 3	0.57 B	25
546.3	Very stiff to hard, gray SILTY LOAM to SILTY CLAY LOAM, trace gravel							
		35	X		13	3 6 6	3.00 P	14
		40	X		14	9 14 13	4.92 S	14

GENERAL NOTES

Begin Drilling: 07-15-2014 Complete Drilling: 07-15-2014
Drilling Contractor: Wang Testing Services Drill Rig:
Driller: A&K Logger: A. Happel Checked by: C. Marin
Drilling Method: 2.25" SSA to 10', mud rotary thereafter, boring backfilled upon completion

WATER LEVEL DATA

While Drilling: Rotary wash
At Completion of Drilling: mud in the borehole
Time After Drilling: NA
Depth to Water: NA
The stratification lines represent the approximate boundary between soil types; the actual transition may be gradual.

WANGENGINC 11000401.GPJ WANGENG.GDT 7/2/19

FILE PATH = pw:\\AECOM-NA-AWS1.aecomonline.local:AECOM_DS02_NA\Documents\01 Americas\Transportation\60269938 Circle\Phase II\002.CAD\006.Roadway\Sheets\62A77 Contracts\D162A77-SHT-AIS-BORING-11.dgn

AECOM
303 EAST WACKER DRIVE, SUITE 1400
CHICAGO, IL 60601-5276
PHONE: (312) 373-7700 FAX: (312) 373-6800

D162A77-SHT-AIS-BORING-11.dgn	DESIGNED -	REVISED -	
USER NAME = Jacqueline.Ng	DRAWN -	REVISED -	
PLOT SCALE = 2.0000 ' / in.	CHECKED -	REVISED -	
PLOT DATE = 1/30/2020	DATE - 1/29/2019	REVISED -	

STATE OF ILLINOIS
DEPARTMENT OF TRANSPORTATION

BORING LOGS XI

SCALE: NONE | SHEET 11 OF 19 SHEETS | STA. TO STA.

F.A.I. RTE.	SECTION	COUNTY	TOTAL SHEETS	SHEET NO.
90/94/290	2015-018R	COOK	1360	544

CONTRACT NO. 62A77

ILLINOIS FED. AID PROJECT

BORING LOG 10-RWB-06

Wang Engineering
wangeng@wangeng.com
1145 N. Main Street
Lombard/IL/60148
Telephone: 6309539928
Fax: 6309539938

WEI Job No.: 1100-04-01
Client: AECOM
Project: Jane Byrne Interchange
Location: Section 17, T39N, R14E of 3rd PM

Datum: NAVD 88
Elevation: 578.32 ft
North: 1896599.90 ft
East: 1171526.13 ft
Station: 7319+07.86
Offset: 10.6588 RT

Elevation (ft)	SOIL AND ROCK DESCRIPTION	Depth (ft)	Sample Type / Recovery	Sample No.	SPT Values (blw/6 in)	Qu (tsf)	Moisture Content (%)
536.3	Very stiff to hard, gray SILTY CLAY LOAM, trace gravel						
		45		15	10 11 12	7.95 B	12
		50		16	6 8 12	6.23 B	16
	Ribboned Sample	55		17	5 7 7	2.33 N/6	28
		60		18	2 5 9	2.21 B	21
513.8	Gray SANDY LOAM --Moist--	65		19	6 9 9	5.08 B	15
513.3	Boring terminated at 65.00 ft						
		70					
		75					
		80					

GENERAL NOTES

Begin Drilling: 07-15-2014 Complete Drilling: 07-15-2014
Drilling Contractor: Wang Testing Services Drill Rig:
Driller: A&K Logger: A. Happel Checked by: C. Marin
Drilling Method: 2.25" SSA to 10', mud rotary thereafter, boring backfilled upon completion

WATER LEVEL DATA

While Drilling: Rotary wash
At Completion of Drilling: mud in the borehole
Time After Drilling: NA
Depth to Water: NA
The stratification lines represent the approximate boundary between soil types; the actual transition may be gradual.

WANGENGINC 11000401.GPJ WANGENG.GDT 7/2/19

BORING LOG 14-RWB-02

Wang Engineering
wangeng@wangeng.com
1145 N. Main Street
Lombard/IL/60148
Telephone: 6309539928
Fax: 6309539938

WEI Job No.: 1100-04-01
Client: AECOM
Project: Jane Byrne Interchange
Location: Section 17, T39N, R14E of 3rd PM

Datum: NAVD 88
Elevation: 582.26 ft
North: 1897133.58 ft
East: 1171489.78 ft
Station: 6233+15.05
Offset: 62.0541 RT

Elevation (ft)	SOIL AND ROCK DESCRIPTION	Depth (ft)	Sample Type / Recovery	Sample No.	SPT Values (blw/6 in)	Qu (tsf)	Moisture Content (%)
581.94	4-inch thick, ASPHALT --PAVEMENT--						
580.8	14-inch thick, CONCRETE --PAVEMENT--						
	Dense, grayish white CRUSHED STONE --FILL--			1	37 30 18	NP	5
578.3	Soft to medium stiff, gray CLAY to SILTY CLAY, trace gravel	5		2	1 2 3	0.41 B	24
				3	0 1 1	0.41 B	25
		10		4	0 0 1	0.25 B	27
				5	0 0 0	0.16 B	26
		15		6	0 0 2	0.49 B	24
				7	0 0 0	0.41 B	26
		20		8	0 0 0	0.25 B	20
		25		9	0 0 1	0.08 B	27
				10	0 0 1	0.57 B	25
				11	0 1 2	0.57 B	24
		30		12	0 0 2	0.41 B	25
		35		13	0 1 2	0.66 B	26
		40		14	0 0 1	0.25 B	37

GENERAL NOTES

Begin Drilling: 07-30-2014 Complete Drilling: 07-30-2014
Drilling Contractor: Wang Testing Services Drill Rig:
Driller: R&J Logger: S. Woods Checked by: C. Marin
Drilling Method: 2.25" SSA to 10', mud rotary thereafter, boring backfilled upon completion

WATER LEVEL DATA

While Drilling: 52.00 ft
At Completion of Drilling: mud in the borehole
Time After Drilling: NA
Depth to Water: NA
The stratification lines represent the approximate boundary between soil types; the actual transition may be gradual.

WANGENGINC 11000401.GPJ WANGENG.GDT 7/2/19

BORING LOG 14-RWB-02

Wang Engineering
wangeng@wangeng.com
1145 N. Main Street
Lombard/IL/60148
Telephone: 6309539928
Fax: 6309539938

WEI Job No.: 1100-04-01
Client: AECOM
Project: Jane Byrne Interchange
Location: Section 17, T39N, R14E of 3rd PM

Datum: NAVD 88
Elevation: 582.26 ft
North: 1897133.58 ft
East: 1171489.78 ft
Station: 6233+15.05
Offset: 62.0541 RT

Elevation (ft)	SOIL AND ROCK DESCRIPTION	Depth (ft)	Sample Type / Recovery	Sample No.	SPT Values (blw/6 in)	Qu (tsf)	Moisture Content (%)
540.5	Hard, gray SILTY CLAY, trace gravel						
		45		15	6 11 19	7.13 B	19
535.5	Gray SILTY LOAM, trace gravel						
533.1	Medium dense, brown, fine SAND --Moist--	50		16	14 23 18	NP	17
		55		17	12 14 14	NP	27
525.5	Dense, gray SILT --Moist--						
		60		18	11 17 19	NP	22
520.5	Medium dense, brown fine SAND --Moist--						
517.3	Boring terminated at 65.00 ft	65		19	9 11 13	NP	21
		70					
		75					
		80					

GENERAL NOTES

Begin Drilling: 07-30-2014 Complete Drilling: 07-30-2014
Drilling Contractor: Wang Testing Services Drill Rig:
Driller: R&J Logger: S. Woods Checked by: C. Marin
Drilling Method: 2.25" SSA to 10', mud rotary thereafter, boring backfilled upon completion

WATER LEVEL DATA

While Drilling: 52.00 ft
At Completion of Drilling: mud in the borehole
Time After Drilling: NA
Depth to Water: NA
The stratification lines represent the approximate boundary between soil types; the actual transition may be gradual.

WANGENGINC 11000401.GPJ WANGENG.GDT 7/2/19

FILE PATH = pw:\\AECOM-NA-AWS1.aecomonline.local:AECOM_DS02_NA\Documents\01 Americas\Transportation\60269938 Circle\Phase II\000.CAD\006.Roadway\Sheets\62A77 Contracts\DI62A77-SHT-AIS-BORING-12.dgn

AECOM
303 EAST WACKER DRIVE, SUITE 1400
CHICAGO, IL 60601-5276
PHONE: (312) 373-7700 FAX: (312) 373-6800

DI62A77-SHT-AIS-BORING-12.dgn	DESIGNED -	REVISED -
USER NAME = Jacqueline.Ng	DRAWN -	REVISED -
PLOT SCALE = 2.0000 ' / in.	CHECKED -	REVISED -
PLOT DATE = 1/30/2020	DATE - 1/29/2019	REVISED -

STATE OF ILLINOIS
DEPARTMENT OF TRANSPORTATION

BORING LOGS XII

SCALE: NONE | SHEET 12 OF 19 SHEETS | STA. TO STA.

F.A.I. RTE.	SECTION	COUNTY	TOTAL SHEETS	SHEET NO.
90/94/290	2015-018R	COOK	1360	545

CONTRACT NO. 62A77

ILLINOIS FED. AID PROJECT

BORING LOG 14-RWB-03

Wang Engineering
wangeng@wangeng.com
1145 N. Main Street
Lombard/IL/60148
Telephone: 6309539928
Fax: 6309539938

WEI Job No.: 1100-04-01

Client: AECOM
Project: Jane Byrne Interchange
Location: Section 17, T39N, R14E of 3rd PM

Datum: NAVD 88
Elevation: 582.96 ft
North: 1896992.53 ft
East: 1171501.15 ft
Station: 6234+52.32
Offset: 75.7462 RT

Elevation (ft)	SOIL AND ROCK DESCRIPTION	Depth (ft)	Sample Type / Recovery	Sample No.	SPT Values (6w/6 in)	Qu (tsf)	Moisture Content (%)
	16-inch thick CONCRETE --PAVEMENT--						
581.6							
581.34	4-inch thick ASPHALT --PAVEMENT--						
	Dense, grayish white SANDY GRAVEL --FILL--			1	22 22 13	NP	3
579.0							
	Stiff, gray SILTY CLAY, trace gravel	5		2	4 3 5	1.64 B	23
				3	2 2 3	1.07 B	24
575.0							
	Very soft to medium stiff, gray CLAY to SILTY CLAY, trace gravel	10		4	1 2 2	0.41 B	32
				5	0 0 0	0.16 B	39
		15		6	0 0 1	0.41 B	26
				7	0 0 0	0.25 B	25
		20		8	0 0 0	0.25 B	25
		25		9	0 0 0	0.16 B	27
				10	0 0 0	0.25 B	26
				11	0 1 1	0.33 B	24
		30		12	1 1 2	< 0.25 P	26
		35		13	1 1 2	0.82 B	24
		40		14	1 1 2	0.57 B	27

GENERAL NOTES

Begin Drilling: 07-20-2014 Complete Drilling: 07-20-2014
Drilling Contractor: Wang Testing Services Drill Rig:
Driller: R&J Logger: S. Woods Checked by: C. Marin
Drilling Method: 2.25" SSA to 10', mud rotary thereafter, boring backfilled upon completion

WATER LEVEL DATA

While Drilling: 57.00 ft
At Completion of Drilling: mud in the borehole
Time After Drilling: NA
Depth to Water: NA
The stratification lines represent the approximate boundary between soil types; the actual transition may be gradual.

WANGENGINC 11000401.GPJ WANGENG.GDT 7/2/19

BORING LOG 14-RWB-03

Wang Engineering
wangeng@wangeng.com
1145 N. Main Street
Lombard/IL/60148
Telephone: 6309539928
Fax: 6309539938

WEI Job No.: 1100-04-01

Client: AECOM
Project: Jane Byrne Interchange
Location: Section 17, T39N, R14E of 3rd PM

Datum: NAVD 88
Elevation: 582.96 ft
North: 1896992.53 ft
East: 1171501.15 ft
Station: 6234+52.32
Offset: 75.7462 RT

Elevation (ft)	SOIL AND ROCK DESCRIPTION	Depth (ft)	Sample Type / Recovery	Sample No.	SPT Values (6w/6 in)	Qu (tsf)	Moisture Content (%)
541.2							
	Dense to very dense, gray CLAY LOAM to SILTY LOAM, trace gravel --Dry--	45		15	8 12 20	5.74 B	13
	--L_L(%)=26, P_L(%)=15-- --%Gravel=5.1-- --%Sand=25.2-- --%Silt=47.0-- --%Clay=22.7-- --A-6 (5)--	50		16	13 20 20	NP	12
528.5	--5-inch, brown, coarse SAND--	55		17	9 18 47	NP	12
526.2	Dense to very dense, brown, fine SAND --Moist--	60		18	15 21 37	NP	22
518.0	Boring terminated at 65.00 ft	65		19	16 20 22	NP	22
		70					
		75					
		80					

GENERAL NOTES

Begin Drilling: 07-20-2014 Complete Drilling: 07-20-2014
Drilling Contractor: Wang Testing Services Drill Rig:
Driller: R&J Logger: S. Woods Checked by: C. Marin
Drilling Method: 2.25" SSA to 10', mud rotary thereafter, boring backfilled upon completion

WATER LEVEL DATA

While Drilling: 57.00 ft
At Completion of Drilling: mud in the borehole
Time After Drilling: NA
Depth to Water: NA
The stratification lines represent the approximate boundary between soil types; the actual transition may be gradual.

WANGENGINC 11000401.GPJ WANGENG.GDT 7/2/19

BORING LOG 15-RWB-02

Wang Engineering
wangeng@wangeng.com
1145 N. Main Street
Lombard/IL/60148
Telephone: 6309539928
Fax: 6309539938

WEI Job No.: 1100-04-01

Client: AECOM
Project: Jane Byrne Interchange
Location: Section 17, T39N, R14E of 3rd PM

Datum: NAVD 88
Elevation: 592.37 ft
North: 1897034.79 ft
East: 1171464.06 ft
Station: 7314+69.17
Offset: 7.23 LT

Elevation (ft)	SOIL AND ROCK DESCRIPTION	Depth (ft)	Sample Type / Recovery	Sample No.	SPT Values (6w/6 in)	Qu (tsf)	Moisture Content (%)
	12-inch thick, brown SANDY LOAM --FILL--						
591.4							
	Very stiff, gray SILTY CLAY LOAM, trace gravel and roots --FILL--			1	3 6 7	2.05 S	17
589.4							
	Medium dense, SILTY LOAM to SILTY CLAY LOAM, trace gravel, sand and brick --FILL--	5		2	6 5 5	NP	17
586.9							
	Very loose to loose, brown, fine SAND --Wet--			3	3 4 4	NP	18
582.9							
	Stiff, brown and gray SILTY CLAY, trace gravel	10		4	2 3 2	NP	17
				5	2 2 3	1.00 P	29
		15		6	0 2 2	1.23 B	24
576.9							
	Soft to medium stiff, gray CLAY to SILTY CLAY, trace gravel			7	0 2 2	0.82 B	24
		20		8	0 1 2	0.57 B	24
		25		9	0 0 2	0.41 B	24
				10	0 0 0	0.74 B	30
				11	1 1 1	0.74 B	22
		30		12	0 2 2	0.57 B	23
		35		13	0 0 1	0.41 B	25
		40		14	0 1 2	0.41 B	25

GENERAL NOTES

Begin Drilling: 04-03-2014 Complete Drilling: 04-03-2014
Drilling Contractor: Wang Testing Services Drill Rig:
Driller: R&J Logger: M. de los Reyes Checked by: C. Marin
Drilling Method: 2.25" SSA to 11', mud rotary thereafter, boring backfilled upon completion

WATER LEVEL DATA

While Drilling: 5.50 ft
At Completion of Drilling: mud in the borehole
Time After Drilling: NA
Depth to Water: NA
The stratification lines represent the approximate boundary between soil types; the actual transition may be gradual.

WANGENGINC 11000401.GPJ WANGENG.GDT 7/2/19

FILE PATH = pw:\\AECOM-NA-ANSI.aecomonline.local:AECOM_DS02_NA\Documents\01 Americas\Transportation\60269938 Circle\Phase II\000.CAD\006.Roadway\Sheets\62A77 Contract\DI62A77-SHT-AIS-BORING-13.dgn

AECOM
303 EAST WACKER DRIVE, SUITE 1400
CHICAGO, IL 60601-5276
PHONE: (312) 373-7700 FAX: (312) 373-6800

DI62A77-SHT-AIS-BORING-13.dgn	DESIGNED -	REVISED -
USER NAME = Jacqueline.Ng	DRAWN -	REVISED -
PLOT SCALE = 2.0000 ' / in.	CHECKED -	REVISED -
PLOT DATE = 1/30/2020	DATE - 1/29/2019	REVISED -

STATE OF ILLINOIS
DEPARTMENT OF TRANSPORTATION

BORING LOGS XIII

SCALE: NONE | SHEET 13 OF 19 SHEETS | STA. TO STA.

F.A.I. RTE.	SECTION	COUNTY	TOTAL SHEETS	SHEET NO.
90/94/290	2015-018R	COOK	1360	546

CONTRACT NO. 62A77

ILLINOIS FED. AID PROJECT

BORING LOG 15-RWB-02

Wang Engineering
wangeng@wangeng.com
1145 N. Main Street
Lombard/IL/60148
Telephone: 6309539928
Fax: 6309539938

WEI Job No.: 1100-04-01
Client: AECOM
Project: Jane Byrne Interchange
Location: Section 17, T39N, R14E of 3rd PM

Datum: NAVD 88
Elevation: 592.37 ft
North: 1897034.79 ft
East: 1171464.06 ft
Station: 7314+69.17
Offset: 7.23 LT

Elevation (ft)	SOIL AND ROCK DESCRIPTION	Depth (ft)	Sample Type / Recovery	Sample No.	SPT Values (0w/6 in)	Qu (tsf)	Moisture Content (%)
540.6	Very stiff to hard, gray SILTY CLAY LOAM to SILTY LOAM, trace gravel						
	--HARD DRILLING-- *--Possible Cobbles--*	45		15	0 2 3	0.82 B	25
		50		16	0 1 2	0.41 B	28
		55		17	7 7 14	4.10 B	20
		60		18	10 25 50/5	3.28 S	14
530.6	Very dense, gray SILT --Wet--						
		65		19	50/5		NP
527.4	Boring terminated at 65.00 ft						
		70					
		75					
		80					

GENERAL NOTES

Begin Drilling: 04-03-2014 Complete Drilling: 04-03-2014
Drilling Contractor: Wang Testing Services Drill Rig:
Driller: R&J Logger: M. de los Reyes Checked by: C. Marin
Drilling Method: 2.25" SSA to 11', mud rotary thereafter, boring backfilled upon completion

WATER LEVEL DATA

While Drilling: 5.50 ft
At Completion of Drilling: mud in the borehole
Time After Drilling: NA
Depth to Water: NA
The stratification lines represent the approximate boundary between soil types; the actual transition may be gradual.

BORING LOG 15-RWB-03

Wang Engineering
wangeng@wangeng.com
1145 N. Main Street
Lombard/IL/60148
Telephone: 6309539928
Fax: 6309539938

WEI Job No.: 1100-04-01
Client: AECOM
Project: Jane Byrne Interchange
Location: Section 17, T39N, R14E of 3rd PM

Datum: NAVD 88
Elevation: 580.75 ft
North: 1896801.76 ft
East: 1171517.06 ft
Station: 6236+42.48
Offset: 97.8444 RT

Elevation (ft)	SOIL AND ROCK DESCRIPTION	Depth (ft)	Sample Type / Recovery	Sample No.	SPT Values (0w/6 in)	Qu (tsf)	Moisture Content (%)
580.4	3.5-inch thick ASPHALT --PAVEMENT--						
579.3	13.5-inch thick CONCRETE --PAVEMENT--						
	Loose to very dense, grayish white SANDY GRAVEL --FILL--			1	21 50/5	NP	8
576.7	Very soft to soft, gray SILTY CLAY to SILTY CLAY LOAM, trace gravel	5		2	2 2 3	< 0.25 P	23
				3	1 1 2	0.33 B	13
572.7	Soft to medium stiff, gray CLAY to SILTY CLAY, trace gravel	10		4	1 1 2	0.25 B	25
	--In-Situ Vane Shear, 18.5 feet-- $S_{u\,undis}$ = 841.75 psf-- $S_{u\,remold}$ = 362.60 psf--	15		1	PUSH	0.25 P	
	--In-Situ Vane Shear, 18.5 feet-- $S_{u\,undis}$ = 841.75 psf-- $S_{u\,remold}$ = 362.60 psf--	20		1	VS	0.25 P	
	--Sensitivity = 2.32--						
		25		2	PUSH	0.25 P	
	--In-Situ Vane Shear, 20.5 feet-- $S_{u\,undis}$ = 1061.90 psf-- $S_{u\,remold}$ = 647.50 psf-- --Sensitivity = 1.64--	30		2	VS	0.25 P	
		35		3	PUSH	0.70 B	
544.0	Very stiff to hard, gray SILTY CLAY to SILTY CLAY LOAM, trace gravel						
		40		5	3 3 8	3.44 B	17

GENERAL NOTES

Begin Drilling: 08-08-2014 Complete Drilling: 08-08-2014
Drilling Contractor: Wang Testing Services Drill Rig:
Driller: R&J Logger: S. Woods Checked by: C. Marin
Drilling Method: 2.25 SSA to 10', mud rotary thereafter, boring backfilled upon completion

WATER LEVEL DATA

While Drilling: 52.00 ft
At Completion of Drilling: mud in the borehole
Time After Drilling: NA
Depth to Water: NA
The stratification lines represent the approximate boundary between soil types; the actual transition may be gradual.

BORING LOG 15-RWB-03

Wang Engineering
wangeng@wangeng.com
1145 N. Main Street
Lombard/IL/60148
Telephone: 6309539928
Fax: 6309539938

WEI Job No.: 1100-04-01
Client: AECOM
Project: Jane Byrne Interchange
Location: Section 17, T39N, R14E of 3rd PM

Datum: NAVD 88
Elevation: 580.75 ft
North: 1896801.76 ft
East: 1171517.06 ft
Station: 6236+42.48
Offset: 97.8444 RT

Elevation (ft)	SOIL AND ROCK DESCRIPTION	Depth (ft)	Sample Type / Recovery	Sample No.	SPT Values (0w/6 in)	Qu (tsf)	Moisture Content (%)
		45		6	8 14 25	7.46 B	17
534.0	Very dense, gray SILTY LOAM, trace gravel --Dry--						
		50		7	13 28 38	NP	12
529.0	Medium dense to dense, brown fine SAND --Moist--						
		55		8	13 14 18	NP	21
		60		9	9 13 14	NP	23
515.7	Boring terminated at 65.00 ft						
		65		10	9 11 11	NP	23
		70					
		75					
		80					

GENERAL NOTES

Begin Drilling: 08-08-2014 Complete Drilling: 08-08-2014
Drilling Contractor: Wang Testing Services Drill Rig:
Driller: R&J Logger: S. Woods Checked by: C. Marin
Drilling Method: 2.25 SSA to 10', mud rotary thereafter, boring backfilled upon completion

WATER LEVEL DATA

While Drilling: 52.00 ft
At Completion of Drilling: mud in the borehole
Time After Drilling: NA
Depth to Water: NA
The stratification lines represent the approximate boundary between soil types; the actual transition may be gradual.

WANGENGINC 1100401.GPJ WANGENG.GDT 7/2/19

FILE PATH = pw:\\AECOM-NA-AWS1.aecomonline.local:AECOM_DS02_NA\Documents\01 Americas\Transportation\60269938 Circle\Phase II\000_CAD\006.Roadway\Sheets\62A77 Contracts\D162A77-SHT-AIS-BORING-14.dgn

AECOM
303 EAST WACKER DRIVE, SUITE 1400
CHICAGO, IL 60601-5276
PHONE: (312) 373-7700 FAX: (312) 373-6800

D162A77-SHT-AIS-BORING-14.dgn	DESIGNED -	REVISED -
USER NAME = Jacqueline.Ng	DRAWN -	REVISED -
PLOT SCALE = 2.0000 ' / in.	CHECKED -	REVISED -
PLOT DATE = 1/30/2020	DATE - 1/29/2019	REVISED -

STATE OF ILLINOIS
DEPARTMENT OF TRANSPORTATION

BORING LOGS XIV

SCALE: NONE | SHEET 14 OF 19 SHEETS | STA. TO STA.

F.A.I. RTE.	SECTION	COUNTY	TOTAL SHEETS	SHEET NO.
90/94/290	2015-018R	COOK	1360	547

CONTRACT NO. 62A77

ILLINOIS FED. AID PROJECT

BORING LOG 16-RWB-01A

Page 1 of 1

Wang Engineering
wangeng@wangeng.com
1145 N. Main Street
Lombard/IL/60148
Telephone: 6309539928
Fax: 6309539938

WEI Job No.: 1100-04-01
Client: AECOM
Project: Jane Byrne Interchange
Location: Section 17, T39N, R14E of 3rd PM

Datum: NAVD 88
Elevation: 578.13 ft
North: 1896646.77 ft
East: 1171609.88 ft
Station: 6238+13.84
Offset: 35.6064 RT

Elevation (ft)	SOIL AND ROCK DESCRIPTION	Depth (ft)	Sample Type / Recovery	Sample No.	SPT Values (0w/6 in)	Qu (tsf)	Moisture Content (%)
	12-inch thick, CONCRETE --PAVEMENT--						
577.1	Dense to very dense, white and brown fine and medium SAND, trace to little gravel --FILL--			1	10 18 20	NP	3
		5		2	20 22 23	NP	4
				3	15 22 42	NP	8
568.6	--Steel plate--			4	50/3"	NP	4
	Boring terminated at 10.00 ft	10					
		15					
		20					

GENERAL NOTES

Begin Drilling: 07-29-2014 Complete Drilling: 07-29-2014
Drilling Contractor: Wang Testing Services Drill Rig:
Driller: R&J Logger: A. Happel Checked by: C. Marin
Drilling Method: 2.25" HSA to 10', mud rotary thereafter, boring backfilled upon completion

WATER LEVEL DATA

While Drilling: DRY
At Completion of Drilling: DRY
Time After Drilling: NA
Depth to Water: NA

The stratification lines represent the approximate boundary between soil types; the actual transition may be gradual.

WANGENGINC 1100401.GPJ WANGENG.GDT 7/2/19

BORING LOG 16-RWB-01B

Page 1 of 2

Wang Engineering
wangeng@wangeng.com
1145 N. Main Street
Lombard/IL/60148
Telephone: 6309539928
Fax: 6309539938

WEI Job No.: 1100-04-01
Client: AECOM
Project: Jane Byrne Interchange
Location: Section 17, T39N, R14E of 3rd PM

Datum: NAVD 88
Elevation: 577.89 ft
North: 1896657.18 ft
East: 1171559.32 ft
Station: 6237+94.68
Offset: 83.6541 RT

Elevation (ft)	SOIL AND ROCK DESCRIPTION	Depth (ft)	Sample Type / Recovery	Sample No.	SPT Values (0w/6 in)	Qu (tsf)	Moisture Content (%)
	12-inch thick, ASPHALT --PAVEMENT--						
576.9	Medium dense, gray CRUSHED STONE --BASE COURSE--			1	5 5 5	NP	5
574.9	Very stiff, grayish SILTY CLAY LOAM, trace gravel	5		2	2 4 4	2.62 B	17
569.9				3	1 2 3	3.00 P	14
	Very soft to soft, gray CLAY to SILTY CLAY, trace to little gravel	10		4	0 1 2	0.25 B	24
				5	0 0 2	0.16 B	20
		15		6	0 1 1	0.08 B	26
				7	1 1 2	0.08 B	27
		20		8	0 1 2	< 0.25 P	30
541.1	Very stiff to hard, gray SILTY CLAY LOAM to SILTY LOAM, trace gravel --Dry--						
		25		9	0 1 2	< 0.25 P	35
				10	0 1 1	< 0.25 P	32
				11	1 2 3	< 0.25 P	29
		30		12	4 4 4	< 0.25 P	27
		35		13	0 1 3	0.25 B	27
		40		14	9 14 16	4.92 S	16

GENERAL NOTES

Begin Drilling: 08-06-2014 Complete Drilling: 08-06-2014
Drilling Contractor: Wang Testing Services Drill Rig:
Driller: R&J Logger: S. Woods Checked by: C. Marin
Drilling Method: 2.25" SSA to 10', mud rotary thereafter, boring backfilled upon completion

WATER LEVEL DATA

While Drilling: Rotary wash
At Completion of Drilling: mud in the borehole
Time After Drilling: NA
Depth to Water: NA

The stratification lines represent the approximate boundary between soil types; the actual transition may be gradual.

WANGENGINC 1100401.GPJ WANGENG.GDT 7/2/19

BORING LOG 16-RWB-01B

Page 2 of 2

Wang Engineering
wangeng@wangeng.com
1145 N. Main Street
Lombard/IL/60148
Telephone: 6309539928
Fax: 6309539938

WEI Job No.: 1100-04-01
Client: AECOM
Project: Jane Byrne Interchange
Location: Section 17, T39N, R14E of 3rd PM

Datum: NAVD 88
Elevation: 577.89 ft
North: 1896657.18 ft
East: 1171559.32 ft
Station: 6237+94.68
Offset: 83.6541 RT

Elevation (ft)	SOIL AND ROCK DESCRIPTION	Depth (ft)	Sample Type / Recovery	Sample No.	SPT Values (0w/6 in)	Qu (tsf)	Moisture Content (%)
		45		15	11 14 25	2.79 S	18
		50		16	12 18 28	7.38 B	15
526.1	Dense, gray SILTY LOAM, trace gravel						
		55		17	30 25 19	NP	11
521.1	Stiff, gray SILTY CLAY, trace gravel						
		60		18	5 5 7	1.23 B	33
516.1	Medium dense, brown, medium to coarse SAND --Dry--						
		65		19	5 6 7	NP	21
512.9	Boring terminated at 65.00 ft						
		70					
		75					
		80					

GENERAL NOTES

Begin Drilling: 08-06-2014 Complete Drilling: 08-06-2014
Drilling Contractor: Wang Testing Services Drill Rig:
Driller: R&J Logger: S. Woods Checked by: C. Marin
Drilling Method: 2.25" SSA to 10', mud rotary thereafter, boring backfilled upon completion

WATER LEVEL DATA

While Drilling: Rotary wash
At Completion of Drilling: mud in the borehole
Time After Drilling: NA
Depth to Water: NA

The stratification lines represent the approximate boundary between soil types; the actual transition may be gradual.

WANGENGINC 1100401.GPJ WANGENG.GDT 7/2/19

FILE PATH = pw:\\AECOM-NA-AWS1.aecomonline.local:AECOM_DS02_NA\Documents\01 Americas\Transportation\60269938 Circle\Phase II\000_CAD\006_Roadway\Sheets\62A77 Contract\DI62A77-SHT-AIS-BORING-15.dgn

AECOM
303 EAST WACKER DRIVE, SUITE 1400
CHICAGO, IL 60601-5276
PHONE: (312) 373-7700 FAX: (312) 373-6800

DI62A77-SHT-AIS-BORING-15.dgn	DESIGNED -	REVISED -
USER NAME = Jacqueline.Ng	DRAWN -	REVISED -
PLOT SCALE = 2.0000 ' / in.	CHECKED -	REVISED -
PLOT DATE = 1/30/2020	DATE - 1/29/2019	REVISED -

STATE OF ILLINOIS
DEPARTMENT OF TRANSPORTATION

BORING LOGS XV

SCALE: NONE | SHEET 15 OF 19 SHEETS | STA. TO STA.

F.A.I. RTE.	SECTION	COUNTY	TOTAL SHEETS	SHEET NO.
90/94/290	2015-018R	COOK	1360	548

CONTRACT NO. 62A77

ILLINOIS FED. AID PROJECT

Wang Engineering
wangeng@wangeng.com
1145 N. Main Street
Lombard/IL/60148
Telephone: 6309539928
Fax: 6309539938

BORING LOG 1705-B-01

WEI Job No.: 1100-04-01

Client: AECOM
Project: Jane Byrne Interchange
Location: Section 17, T39N, R14E of 3rd PM

Datum: NAVD 88
Elevation: 582.91 ft
North: 1896943.83 ft
East: 1171839.55 ft
Station: 1819+14.23
Offset: 7.9591 RT

Elevation (ft)	SOIL AND ROCK DESCRIPTION	Depth (ft)	Sample Type / Recovery	Sample No.	SPT Values (blw/6 in)	Qu (tsf)	Moisture Content (%)
	17-inch thick CONCRETE --PAVEMENT--						
581.3	Dense, gray CRUSHED STONE --FILL--			1	23 18 14	NP	4
579.7	Stiff, gray SILTY CLAY, trace gravel	5		2	2 2 3	1.64 B	33
577.4	Very soft to medium stiff, gray CLAY to SILTY CLAY, trace gravel			3	1 2 3	0.57 B	21
	--In-Situ Vane Shear, 8.0 feet-- --$S_{u\,undis}$ = 1034.0 psf-- --$S_{u\,remold}$ = 336.05 psf-- --Sensitivity = 3.07--			1	VS		
		10		4	1 2 3	0.74 B	20
	--In-Situ Vane Shear, 10.5 feet-- --$S_{u\,undis}$ = 1189.1 psf-- --$S_{u\,remold}$ = 620.4 psf-- --Sensitivity = 1.92--			2	VS		
				5	2 1 3	< 0.25 P	20
	--In-Situ Vane Shear, 13.0 feet-- --$S_{u\,undis}$ = 1706.1 psf-- --$S_{u\,remold}$ = 620.4 psf-- --Sensitivity = 2.75--			3	VS		
				6	2 1 1	0.49 B	25
	--In-Situ Vane Shear, 15.5 feet-- --$S_{u\,undis}$ = 620.4 psf-- --$S_{u\,remold}$ = 361.9 psf-- --Sensitivity = 1.71--	15		4	VS		
	6-inch, gray SILTY LOAM, little gravel			7	1 2 2	0.25 B	28
	--In-Situ Vane Shear, 18.0 feet-- --$S_{u\,undis}$ = 543.9 psf-- --$S_{u\,remold}$ = 336.7 psf-- --Sensitivity = 1.63--			5	VS		
		20		8	0 2 3	0.33 B	25
	--In-Situ Vane Shear, 20.5 feet-- --$S_{u\,undis}$ = 854.7 psf-- --$S_{u\,remold}$ = 207.2 psf-- --Sensitivity = 4.13--			6	VS		
				9	1 1 1	< 0.25 P	28
	--In-Situ Vane Shear, 23.0 feet-- --$S_{u\,undis}$ = 492.1 psf-- --$S_{u\,remold}$ = 181.3 psf-- --Sensitivity = 2.71--			7	VS		
		25		10	1 1 2	< 0.25 P	23
	--In-Situ Vane Shear, 25.5 feet-- --$S_{u\,undis}$ = 440.3 psf-- --$S_{u\,remold}$ = 284.9 psf-- --Sensitivity = 1.54--			8	VS		
				11	0 0 2	0.41 B	27
	--In-Situ Vane Shear, 28.0 feet-- --$S_{u\,undis}$ = 880.6 psf-- --$S_{u\,remold}$ = 103.6 psf-- --Sensitivity = 8.5--			9	VS		
		30		12	0 1 2	0.33 B	26
	--In-Situ Vane Shear, 31.5 feet-- --$S_{u\,undis}$ = 259 psf-- --$S_{u\,remold}$ = 25.9 psf-- --Sensitivity = 10.0--			10	VS		
		35		13	1 2 3	0.98 B	24
	--In-Situ Vane Shear, 36.5 feet-- --$S_{u\,undis}$ = 1602.7 psf-- --$S_{u\,remold}$ = 155.1 psf-- --Sensitivity = 10.33--			11	VS		
		40		14	2 2 3	0.50 P	26

GENERAL NOTES

Begin Drilling: 06-18-2013 Complete Drilling: 06-20-2013
Drilling Contractor: Wang Testing Services Drill Rig:
Driller: P&N Logger: A. Happel Checked by: C. Marin
Drilling Method: 2.25" SSA to 10', mud rotary thereafter, boring backfilled upon completion

WATER LEVEL DATA

While Drilling: Rotary wash
At Completion of Drilling: mud in the borehole
Time After Drilling: NA
Depth to Water: NA

The stratification lines represent the approximate boundary between soil types; the actual transition may be gradual.

Wang Engineering
wangeng@wangeng.com
1145 N. Main Street
Lombard/IL/60148
Telephone: 6309539928
Fax: 6309539938

BORING LOG 1705-B-01

WEI Job No.: 1100-04-01

Client: AECOM
Project: Jane Byrne Interchange
Location: Section 17, T39N, R14E of 3rd PM

Datum: NAVD 88
Elevation: 582.91 ft
North: 1896943.83 ft
East: 1171839.55 ft
Station: 1819+14.23
Offset: 7.9591 RT

Elevation (ft)	SOIL AND ROCK DESCRIPTION	Depth (ft)	Sample Type / Recovery	Sample No.	SPT Values (blw/6 in)	Qu (tsf)	Moisture Content (%)
	--In-Situ Vane Shear, 41.5 feet-- --$S_{u\,undis}$ = 2171.4 psf-- --$S_{u\,remold}$ = 1447.6 psf-- --Sensitivity = 1.5--			12	VS		
540.2	Hard, gray SILTY CLAY LOAM, trace to little gravel						
		45		15	6 14 27	6.56 B	17
		50		16	18 19 40	4.00 P	15
526.9	Dense, gray SANDY LOAM, little gravel --MOIST--	55		17	24 17 28	NP	12
526.2	Dense to very dense, gray SANDY GRAVEL						
		60		18	10 34 47	NP	23
515.9	Hard, gray SILTY CLAY LOAM, trace gravel						
		65		19	12 18 18	NP	11
		70		20	9 23 30	NP	12
		75		21	18 32 28	10.25 B	14
		80		22	28 36 37	2.48 B	16

GENERAL NOTES

Begin Drilling: 06-18-2013 Complete Drilling: 06-20-2013
Drilling Contractor: Wang Testing Services Drill Rig:
Driller: P&N Logger: A. Happel Checked by: C. Marin
Drilling Method: 2.25" SSA to 10', mud rotary thereafter, boring backfilled upon completion

WATER LEVEL DATA

While Drilling: Rotary wash
At Completion of Drilling: mud in the borehole
Time After Drilling: NA
Depth to Water: NA

The stratification lines represent the approximate boundary between soil types; the actual transition may be gradual.

Wang Engineering
wangeng@wangeng.com
1145 N. Main Street
Lombard/IL/60148
Telephone: 6309539928
Fax: 6309539938

BORING LOG 1705-B-01

WEI Job No.: 1100-04-01

Client: AECOM
Project: Jane Byrne Interchange
Location: Section 17, T39N, R14E of 3rd PM

Datum: NAVD 88
Elevation: 582.91 ft
North: 1896943.83 ft
East: 1171839.55 ft
Station: 1819+14.23
Offset: 7.9591 RT

Elevation (ft)	SOIL AND ROCK DESCRIPTION	Depth (ft)	Sample Type / Recovery	Sample No.	SPT Values (blw/6 in)	Qu (tsf)	Moisture Content (%)
	--HARD DRILLING-- --Possible Cobbles--						
				23	50/5.5	4.50 P	11
		85					
494.9	Very dense, brown GRAVEL			24	50/2	NP	
	--AUGER REFUSAL--						
492.9	Boring terminated at 90.00 ft	90					
		95					
		100					

GENERAL NOTES

Begin Drilling: 06-18-2013 Complete Drilling: 06-20-2013
Drilling Contractor: Wang Testing Services Drill Rig:
Driller: P&N Logger: A. Happel Checked by: C. Marin
Drilling Method: 2.25" SSA to 10', mud rotary thereafter, boring backfilled upon completion

WATER LEVEL DATA

While Drilling: Rotary wash
At Completion of Drilling: mud in the borehole
Time After Drilling: NA
Depth to Water: NA

The stratification lines represent the approximate boundary between soil types; the actual transition may be gradual.

WANGENGINC 11000401.GPJ WANGENG.GDT 7/2/19

BORING LOG 1705-B-02

Wang Engineering
wangeng@wangeng.com
1145 N. Main Street
Lombard/IL/60148
Telephone: 6309539928
Fax: 6309539938

WEI Job No.: 1100-04-01

Client: AECOM
Project: Jane Byrne Interchange
Location: Section 17, T39N, R14E of 3rd PM

Datum: NAVD 88
Elevation: 583.14 ft
North: 1897114.28 ft
East: 1171830.86 ft
Station: 1820+84.67
Offset: 1.9068 RT

Elevation (ft)	SOIL AND ROCK DESCRIPTION	Depth (ft)	Sample Type / Recovery	Sample No.	SPT Values (0w/6 in)	Qu (tsf)	Moisture Content (%)
	13-inch thick CONCRETE --PAVEMENT--						
582.0	Medium dense, gray CRUSHED STONE --FILL--			1	14 11 6	NP	4
580.1	Very stiff, gray SILTY CLAY, trace gravel	5		2	2 4 5	2.62 B	27
577.6	Medium stiff, gray CLAY to SILTY CLAY, trace gravel			3	1 3 5	0.98 B	25
		10		4	1 2 2	0.66 B	21
572.6	Soft, gray SILTY LOAM, trace gravel			5	1 1 2	0.49 B	21
570.1	Very soft to medium stiff, gray CLAY to SILTY CLAY, trace gravel	15		6	0 0 1	0.41 B	26
				7	0 0 1	0.33 B	20
		20		8	0 0 0	0.41 B	27
	--L_L(%)=38, P_L(%)=16-- --%Gravel=1.9-- --%Sand=10.7-- --%Silt=49.3-- --%Clay=38.0-- --A-6 (19)--	25		9	0 1 2	< 0.25 P	22
		30		10	0 0 0	0.41 B	26
		35		11	0 0 0	0.33 B	27
		40		12	0 0 2	0.41 B	25
				13	1 3 3	0.90 B	26
				14	1 2 1	0.41 B	29

GENERAL NOTES

Begin Drilling: 06-20-2013 Complete Drilling: 06-21-2013
Drilling Contractor: Wang Testing Services Drill Rig:
Driller: P&N Logger: A. Happel Checked by: C. Marin
Drilling Method: 2.25" SSA to 10', mud rotary thereafter, boring backfilled upon completion

WATER LEVEL DATA

While Drilling: Rotary wash
At Completion of Drilling: mud in the borehole
Time After Drilling: NA
Depth to Water: NA
The stratification lines represent the approximate boundary between soil types; the actual transition may be gradual.

BORING LOG 1705-B-02

Wang Engineering
wangeng@wangeng.com
1145 N. Main Street
Lombard/IL/60148
Telephone: 6309539928
Fax: 6309539938

WEI Job No.: 1100-04-01

Client: AECOM
Project: Jane Byrne Interchange
Location: Section 17, T39N, R14E of 3rd PM

Datum: NAVD 88
Elevation: 583.14 ft
North: 1897114.28 ft
East: 1171830.86 ft
Station: 1820+84.67
Offset: 1.9068 RT

Elevation (ft)	SOIL AND ROCK DESCRIPTION	Depth (ft)	Sample Type / Recovery	Sample No.	SPT Values (0w/6 in)	Qu (tsf)	Moisture Content (%)
541.4	Hard, gray SILTY CLAY LOAM, trace gravel						
		45		15	10 14 20	5.74 B	15
		50		16	10 15 21	4.10 B	21
		55		17	12 18 27	10.09 B	15
524.1	Dense, gray GRAVELLY SANDY LOAM	60		18	11 14 18	NP	14
	--%Gravel=28.5-- --%Sand=49.5-- --%Silt=19.2-- --%Clay=2.9-- --A-1-b (0)--	65		19	19 23 23	NP	16
516.4	Dense, gray GRAVEL	70		20	16 26 31	NP	14
		75		21	5 20 34	NP	5
506.4	Dense, gray, medium to coarse SAND, trace gravel	80		22	16 15 18	NP	14
	--%Gravel=14.4-- --%Sand=68.5-- --%Silt=14.9--						

GENERAL NOTES

Begin Drilling: 06-20-2013 Complete Drilling: 06-21-2013
Drilling Contractor: Wang Testing Services Drill Rig:
Driller: P&N Logger: A. Happel Checked by: C. Marin
Drilling Method: 2.25" SSA to 10', mud rotary thereafter, boring backfilled upon completion

WATER LEVEL DATA

While Drilling: Rotary wash
At Completion of Drilling: mud in the borehole
Time After Drilling: NA
Depth to Water: NA
The stratification lines represent the approximate boundary between soil types; the actual transition may be gradual.

BORING LOG 1705-B-02

Wang Engineering
wangeng@wangeng.com
1145 N. Main Street
Lombard/IL/60148
Telephone: 6309539928
Fax: 6309539938

WEI Job No.: 1100-04-01

Client: AECOM
Project: Jane Byrne Interchange
Location: Section 17, T39N, R14E of 3rd PM

Datum: NAVD 88
Elevation: 583.14 ft
North: 1897114.28 ft
East: 1171830.86 ft
Station: 1820+84.67
Offset: 1.9068 RT

Elevation (ft)	SOIL AND ROCK DESCRIPTION	Depth (ft)	Sample Type / Recovery	Sample No.	SPT Values (0w/6 in)	Qu (tsf)	Moisture Content (%)
	--%Clay=2.2-- --A-1-b (0)--						
501.4	Very dense, gray GRAVEL						
		85		23	50/5"	NP	21
497.1	Strong, excellent rock quality, light gray, fresh, joint breaks with little to no infill, slightly vuggy DOLOSTONE --Run 1 - RECOVERY =100%-- --RQD--95%--	90	CORE	1			
		95					
487.1	Boring terminated at 96.00 ft	100					

GENERAL NOTES

Begin Drilling: 06-20-2013 Complete Drilling: 06-21-2013
Drilling Contractor: Wang Testing Services Drill Rig:
Driller: P&N Logger: A. Happel Checked by: C. Marin
Drilling Method: 2.25" SSA to 10', mud rotary thereafter, boring backfilled upon completion

WATER LEVEL DATA

While Drilling: Rotary wash
At Completion of Drilling: mud in the borehole
Time After Drilling: NA
Depth to Water: NA
The stratification lines represent the approximate boundary between soil types; the actual transition may be gradual.

WANGENGINC 11000401.GPJ WANGENG.GDT 7/2/19

FILE PATH = pw:\\AECOM-NA-AWS\aecomonline.local\AECOM_DS02_NA\Documents\01 Americas\Transportation\60269938 Circle\Phase_II\002.CAD\006.Roadway\Sheets\62A77 Contracts\D162A77-SHT-AIS-BORING-17.dgn

AECOM
303 EAST WACKER DRIVE, SUITE 1400
CHICAGO, IL 60601-5276
PHONE: (312) 373-7700 FAX: (312) 373-6800

D162A77-SHT-AIS-BORING-17.dgn	DESIGNED -	REVISED -	
USER NAME = Jacqueline.Ng	DRAWN -	REVISED -	
PLOT SCALE = 2.0000 ' / in.	CHECKED -	REVISED -	
PLOT DATE = 1/30/2020	DATE - 1/29/2019	REVISED -	

STATE OF ILLINOIS
DEPARTMENT OF TRANSPORTATION

BORING LOGS XVII

SCALE: NONE | SHEET 17 OF 19 SHEETS | STA. TO STA.

F.A.I. RTE.	SECTION	COUNTY	TOTAL SHEETS	SHEET NO.
90/94/290	2015-018R	COOK	1360	550

CONTRACT NO. 62A77

ILLINOIS FED. AID PROJECT

BORING LOG VST-01

Wang Engineering
wangeng@wangeng.com
1145 N. Main Street
Lombard/IL/60148
Telephone: 6309539928
Fax: 6309539938

WEI Job No.: 1100-04-01

Client: AECOM
Project: Jane Byrne Interchange
Location: Section 17, T39N, R14E of 3rd PM

Datum: NAVD 88
Elevation: 593.55 ft
North: 1897108.36 ft
East: 1171435.63 ft
Station: 7313+90.47
Offset: 2.00 LT

Profile	Elevation (ft)	SOIL AND ROCK DESCRIPTION	Depth (ft)	Sample Type / Recovery	Sample No.	SPT Values (0w/6 in)	Qu (tsf)	Moisture Content (%)
		Very stiff, brown SILTY CLAY LOAM, trace gravel --FILL--			1	3 5 7	2.75 P	14
	590.5	Medium dense, fine SAND	5		2	5 5 6	NP	7
	586.8	Medium stiff to stiff, gray SILTY CLAY	10		3	2 2 3	1.31 B	26
			15		4	2 2 3	0.98 B	28
	578.0	Soft, gray SILTY CLAY			5	1 2 2	0.25 P	29
	575.3	--In-Situ Vane Shear, 19.5 feet--	20		1			

Profile	Elevation (ft)	SOIL AND ROCK DESCRIPTION	Depth (ft)	Sample Type / Recovery	Sample No.	SPT Values (0w/6 in)	Qu (tsf)	Moisture Content (%)
		--$S_{u\,undis}$ = 786.3 psf-- --$S_{u\,remold}$ = 371.3 psf-- --Sensitivity = 2.1--				VS		
		--In-Situ Vane Shear, 22.0 feet-- --$S_{u\,undis}$ = 742.6 psf-- --$S_{u\,remold}$ = 305.8 psf-- --Sensitivity = 2.4--			2	VS		
		--In-Situ Vane Shear, 24.5 feet-- --$S_{u\,undis}$ = 578.8 psf-- --$S_{u\,remold}$ = 382.2 psf-- --Sensitivity = 1.5--	25		3	VS		
		--In-Situ Vane Shear, 27.0 feet-- --$S_{u\,undis}$ = 742.6 psf-- --$S_{u\,remold}$ = 415.0 psf-- --Sensitivity = 1.8--			4	VS		
		--In-Situ Vane Shear, 29.5 feet-- --$S_{u\,undis}$ = 589.7 psf-- --$S_{u\,remold}$ = 283.9 psf-- --Sensitivity = 2.1--	30		5	VS		
		--In-Situ Vane Shear, 32.0 feet-- --$S_{u\,undis}$ = 1026.6 psf-- --$S_{u\,remold}$ = 447.8 psf-- --Sensitivity = 2.3--			6	VS		
		--In-Situ Vane Shear, 34.5 feet-- --$S_{u\,undis}$ = 764.5 psf-- --$S_{u\,remold}$ = 480.5 psf-- --Sensitivity = 1.6--	35		7	VS		
		--In-Situ Vane Shear, 37.0 feet-- --$S_{u\,undis}$ = 1026.6 psf-- --$S_{u\,remold}$ = 589.7 psf-- --Sensitivity = 1.7--			8	VS		
			40					

GENERAL NOTES

Begin Drilling: 12-01-2015 Complete Drilling: 12-01-2015
Drilling Contractor: Wang Testing Services Drill Rig:
Driller: R&N Logger: F. Bozga Checked by: A. Kurnia
Drilling Method: 2.25" HSA to 10', mud rotary thereafter, boring backfilled upon completion

WATER LEVEL DATA

While Drilling: Rotary wash
At Completion of Drilling: mud in the borehole
Time After Drilling: NA
Depth to Water: NA
The stratification lines represent the approximate boundary between soil types; the actual transition may be gradual.

WANGENGINC 1100401.GPJ WANGENG.GDT 7/2/19

BORING LOG VST-01

Wang Engineering
wangeng@wangeng.com
1145 N. Main Street
Lombard/IL/60148
Telephone: 6309539928
Fax: 6309539938

WEI Job No.: 1100-04-01

Client: AECOM
Project: Jane Byrne Interchange
Location: Section 17, T39N, R14E of 3rd PM

Datum: NAVD 88
Elevation: 593.55 ft
North: 1897108.36 ft
East: 1171435.63 ft
Station: 7313+90.47
Offset: 2.00 LT

Profile	Elevation (ft)	SOIL AND ROCK DESCRIPTION	Depth (ft)	Sample Type / Recovery	Sample No.	SPT Values (0w/6 in)	Qu (tsf)	Moisture Content (%)
		--Equipment Slipped--	45		9	VS		
		--In-Situ Vane Shear, 46.5 feet-- --$S_{u\,undis}$ = 1070.2 psf-- --$S_{u\,remold}$ = 633.4 psf-- --Sensitivity = 1.7--			10	VS		
	544.0	--In-Situ Vane Shear, 49.0 feet-- --$S_{u\,undis}$ = 1157.6 psf-- --$S_{u\,remold}$ = 611.6 psf-- --Sensitivity = 2.3--	50		11	VS		
		Boring terminated at 49.50 ft	55					
			60					

GENERAL NOTES

Begin Drilling: 12-01-2015 Complete Drilling: 12-01-2015
Drilling Contractor: Wang Testing Services Drill Rig:
Driller: R&N Logger: F. Bozga Checked by: A. Kurnia
Drilling Method: 2.25" HSA to 10', mud rotary thereafter, boring backfilled upon completion

WATER LEVEL DATA

While Drilling: Rotary wash
At Completion of Drilling: mud in the borehole
Time After Drilling: NA
Depth to Water: NA
The stratification lines represent the approximate boundary between soil types; the actual transition may be gradual.

WANGENGINC 1100401.GPJ WANGENG.GDT 7/2/19

BORING LOG LTB-08

Wang Engineering
wangeng@wangeng.com
1145 N. Main Street
Lombard/IL/60148
Telephone: 6309539928
Fax: 6309539938

WEI Job No.: 1100-04-01

Client: AECOM
Project: Jane Byrne Interchange
Location: Section 16, T39N, R14E of 3rd PM

Datum: NAVD 88
Elevation: 586.97 ft
North: 1897093.86 ft
East: 1171652.78 ft
Station: 6217+75.04
Offset: 122.29 LT

Profile	Elevation (ft)	SOIL AND ROCK DESCRIPTION	Depth (ft)	Sample Type / Recovery	Sample No.	SPT Values (0w/6 in)	Qu (tsf)	Moisture Content (%)
	586.3	8-inch, CONCRETE --PAVEMENT--						
	585.6	6-inch, gray CRUSHED STONE --FILL--						
		Very stiff, gray SILTY CLAY LOAM, trace gravel; damp --RDR 1-- --FILL--			1	2 3 5	NP	17
			5		2	2 3 5	2.87 B	19
	581.5	Soft, gray CLAY to SILTY CLAY, trace gravel; damp to moist --RDR 2--			3	1 2 2	0.57 B	24
			10		4	1 2 2	0.41 B	25
					5	0 1 1	0.33 B	25
			15		6	0 1 1	0.33 B	26
					7	0 0 1	0.25 B	26
			20		8	0 0 0	0.16 B	27

Profile	Elevation (ft)	SOIL AND ROCK DESCRIPTION	Depth (ft)	Sample Type / Recovery	Sample No.	SPT Values (0w/6 in)	Qu (tsf)	Moisture Content (%)
					9	0 0 1	0.16 B	26
			25		10	0 0 0	0.25 B	26
					11	0 0 2	0.16 B	25
			30		12	0 0 2	0.41 B	25
	550.0	Medium stiff, gray SILTY CLAY LOAM, trace gravel; damp --RDR 1--						
			35		13	1 1 2	0.66 B	25
			40		14	3 3 3	0.82 B	15

GENERAL NOTES

Begin Drilling: 07-05-2019 Complete Drilling: 07-05-2019
Drilling Contractor: Wang Testing Services Drill Rig:
Driller: R&J Logger: F. Bozga Checked by: C. Marin
Drilling Method: 2.25" IDA HSA, boring backfilled upon completion

WATER LEVEL DATA

While Drilling: DRY
At Completion of Drilling: mud in the borehole
Time After Drilling: NA
Depth to Water: NA
The stratification lines represent the approximate boundary between soil types; the actual transition may be gradual.

WANGENGINC 1100401.GPJ WANGENG.GDT 10/22/19

FILE PATH = pw:\\AECOM-NA-AWSI.aecomonline.local:AECOM.DS02.NA\Documents\01 Americas\Transportation\60269938 Circle\Phase II\000 CAD\006 Roadway\Sheets\62A77 Contract\D162A77-SHT-AIS-BORING-18.dgn

AECOM
303 EAST WACKER DRIVE, SUITE 1400
CHICAGO, IL 60601-5276
PHONE: (312) 373-7700 FAX: (312) 373-6800

D162A77-SHT-AIS-BORING-18.dgn	DESIGNED -	REVISED -
USER NAME = Jacqueline.Ng	DRAWN -	REVISED -
PLOT SCALE = 2.0000 ' / in.	CHECKED -	REVISED -
PLOT DATE = 1/30/2020	DATE - 1/29/2019	REVISED -

STATE OF ILLINOIS
DEPARTMENT OF TRANSPORTATION

BORING LOGS XVIII

SCALE: NONE | SHEET 18 OF 19 SHEETS | STA. TO STA.

F.A.I. RTE.	SECTION	COUNTY	TOTAL SHEETS	SHEET NO.
90/94/290	2015-018R	COOK	1360	551

CONTRACT NO. 62A77
ILLINOIS FED. AID PROJECT

Wang Engineering
wangeng@wangeng.com
1145 N. Main Street
Lombard/IL/60148
Telephone: 6309539928
Fax: 6309539938

BORING LOG LTB-08

WEI Job No.: 1100-04-01

Client: AECOM
Project: Jane Byrne Interchange
Location: Section 16, T39N, R14E of 3rd PM

Datum: NAVD 88
Elevation: 586.97 ft
North: 1897093.86 ft
East: 1171652.78 ft
Station: 6217+75.04
Offset: 122.29 LT

Profile	Elevation (ft)	SOIL AND ROCK DESCRIPTION	Depth (ft)	Sample Type / recovery	Sample No.	SPT Values (blw/6 in)	Qu (tsf)	Moisture Content (%)
	545.3	Hard, gray SILTY CLAY LOAM to SILTY LOAM, trace gravel; damp --RDR--2	45		15	6 17 20	5.40 B	14
	540.7	Hard, gray SILTY CLAY to SILTY CLAY LOAM, trace gravel; damp --RDR 2--	50		16	11 30 44	5.99 B	19
	537.0	Boring terminated at 50.00 ft	55					
			60					

GENERAL NOTES

Begin Drilling: 07-05-2019 Complete Drilling: 07-05-2019
Drilling Contractor: Wang Testing Services Drill Rig:
Driller: R&J Logger: F. Bozga Checked by: C. Marin
Drilling Method: 2.25" IDA HSA, boring backfilled upon completion

WATER LEVEL DATA

While Drilling: DRY
At Completion of Drilling: mud in the borehole
Time After Drilling: NA
Depth to Water: NA

The stratification lines represent the approximate boundary between soil types; the actual transition may be gradual.

WANGENGINC 1100401.GPJ WANGENG.GDT 10/22/19

FILE PATH = pw:\\AECOM-NA-AWS1.aecomonline.local:AECOM_DS02_NA\Documents\01 Americas\Transportation\60269938 Circle\Phase II\000_CAD\006.Roadway\Sheets\62A77 Contract\D162A77-SHT-AIS-BORING-19.dgn

AECOM
303 EAST WACKER DRIVE, SUITE 1400
CHICAGO, IL 60601-5276
PHONE: (312) 373-7700 FAX: (312) 373-6800

D162A77-SHT-AIS-BORING-19.dgn	DESIGNED -	REVISED -
USER NAME = Jacqueline.Ng	DRAWN -	REVISED -
PLOT SCALE = 2.0000 ' / in.	CHECKED -	REVISED -
PLOT DATE = 1/30/2020	DATE - 1/29/2019	REVISED -

STATE OF ILLINOIS
DEPARTMENT OF TRANSPORTATION

BORING LOGS XIX

SCALE: NONE | SHEET 19 OF 19 SHEETS | STA. TO STA.

F.A.I. RTE.	SECTION	COUNTY	TOTAL SHEETS	SHEET NO.
90/94/290	2015-018R	COOK	1360	552

CONTRACT NO. 62A77

ILLINOIS FED. AID PROJECT

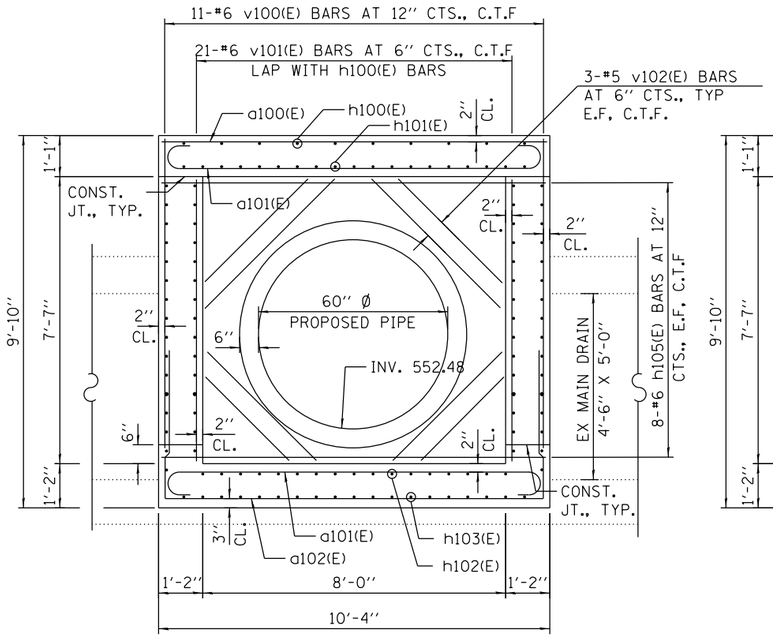

ELEVATION - WEST SIDE WALL

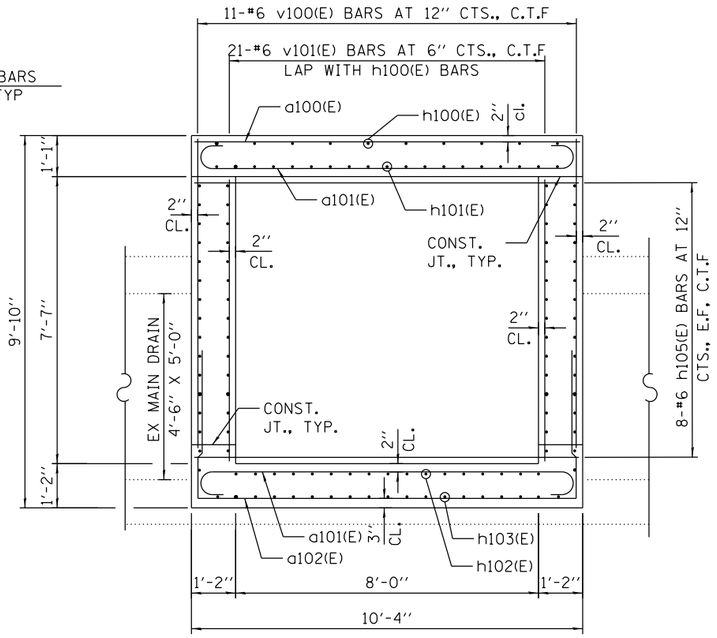

ELEVATION - EAST SIDE WALL

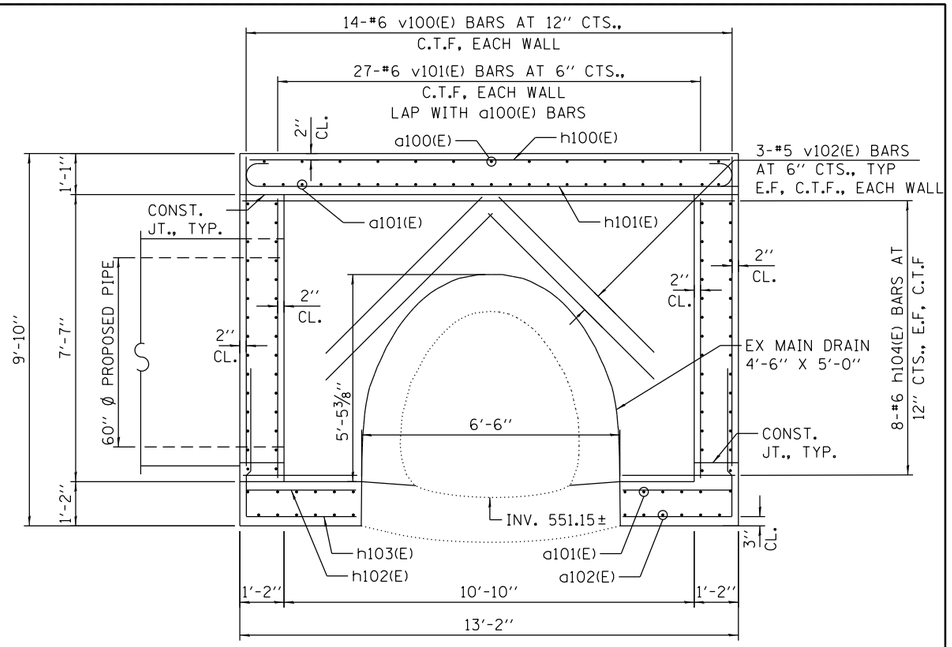

ELEVATION - NORTH AND SOUTH SIDE WALLS

(60'' PIPE ON THE WEST SIDE LOOKING NORTH)

N

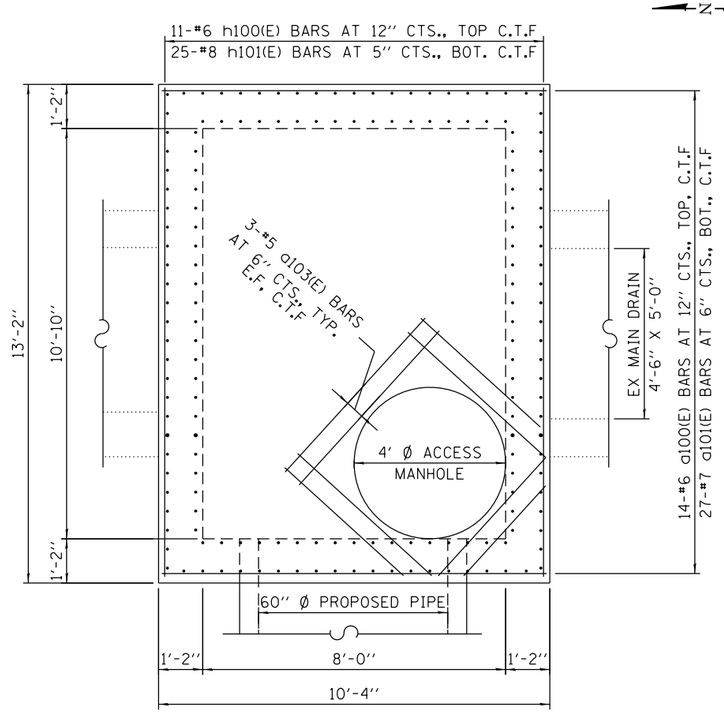

PLAN - TOP SLAB

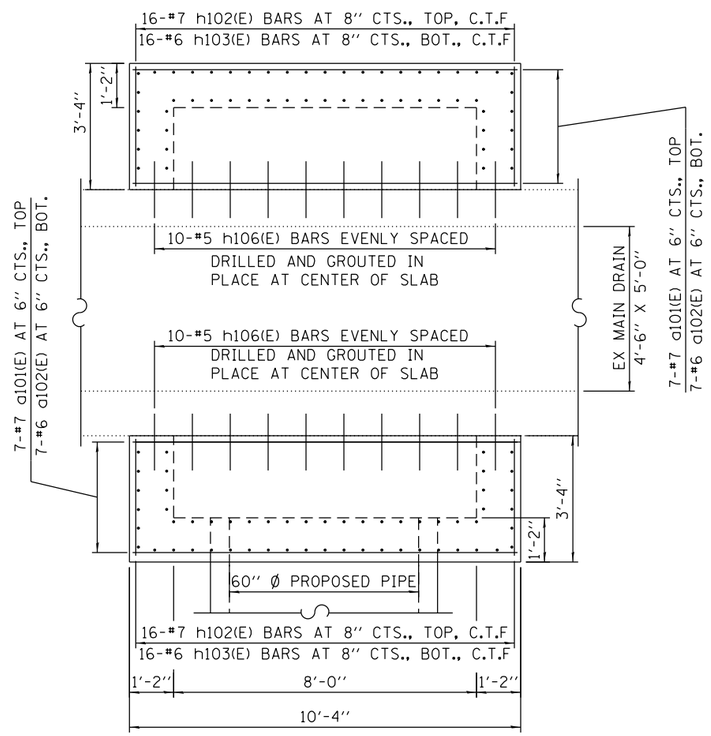

PLAN - BOTTOM SLAB

JUNCTION CHAMBER NO. 1
BILL OF MATERIAL

BAR	NO.	SIZE	LENGTH	SHAPE
a100(E)	14	#6	10'-0''	
a101(E)	41	#7	11'-8''	
a102(E)	14	#6	17''-10''	
a103(E)	24	#5	5'-6''	
h100(E)	11	#6	12'-10''	
h101(E)	25	#8	14'-8''	
h102(E)	32	#7	4'-2''	
h103(E)	32	#6	6'-11''	
h104(E)	32	#6	12'-10''	
h105(E)	32	#6	10'-0''	
h106(E)	20	#5	1'-6''	
v100(E)	50	#6	9'-5''	
v101(E)	96	#6	11'-3''	
v102(E)	48	#5	7'-6''	
CONCRETE STRUCTURES			CU. YD.	21.8
REINFORCEMENT BARS, EPOXY COATED			POUND	7,330
FRAMES AND LIDS, TYPE 1, CLOSED LID			EACH	1
PRECAST CONCRETE RISER			EACH	1

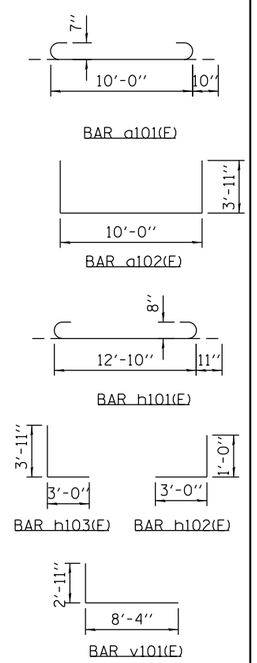

NOTES
1. C.T.F = CUT TO FIT
O.F = OUTER FACE
I.F= INNER FACE
BOT.= BOTTOM
E.F = EACH FACE

MIN. LAP
#5 = 2'-5''
#6 = 2'-11''

FILE PATH = pw:\\AECOM-NA-AWSI.aecomonline.local:ECOM_DS02_NA\Documents\01 Americas\Transportation\60269938 Circle\Phase II\000_CAD\006_Roadway\Sheets\62A77 Contracts\D162A77-SHT-Drain-Detail-JC-01.dgn

TranSmart/EJM
411 South Wells Street Suite 1000
Chicago, Illinois 60607

D162A77-SHT-Drain-Detail-JC-01.dgn	DESIGNED - RT	REVISED -
USER NAME = rtaha	DRAWN - RT	REVISED -
PLOT SCALE = 4.0000 ' / in.	CHECKED - MG	REVISED -
PLOT DATE = 1/23/2020	DATE - 1/29/2019	REVISED -

STATE OF ILLINOIS
DEPARTMENT OF TRANSPORTATION

DRAINAGE DETAIL
JUNCTION CHAMBER NO. 1

SCALE: NONE | SHEET 1 OF 2 SHEETS | STA. 6237+11.54 TO STA. 6237+21.88

F.A.I. RTE.	SECTION	COUNTY	TOTAL SHEETS	SHEET NO.
90/94/290	2015-018R	COOK	1360	553

CONTRACT NO. 62A77
ILLINOIS FED. AID PROJECT

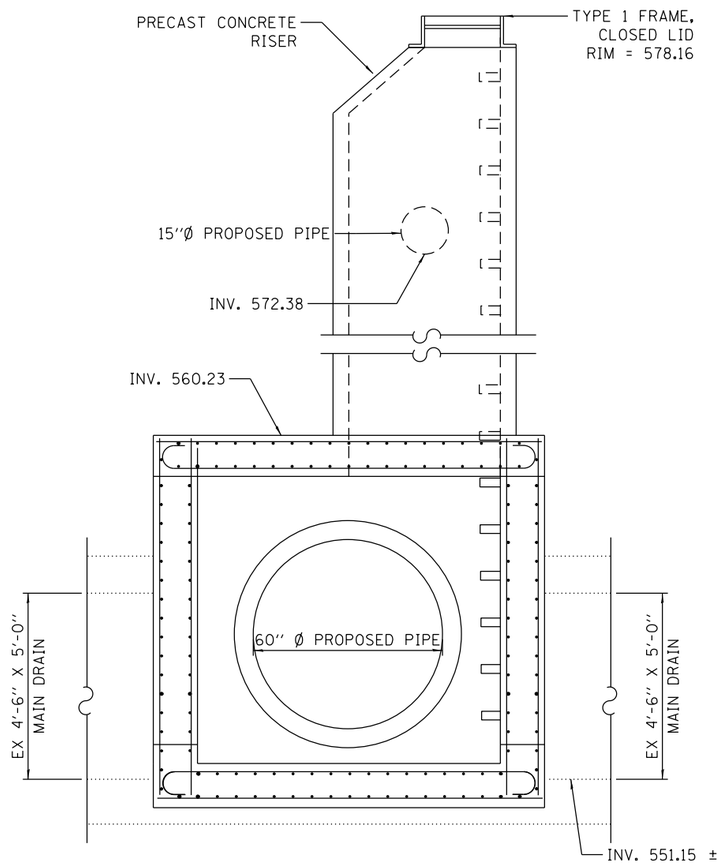

WEST SIDE WALL SECTION

RISER DETAIL

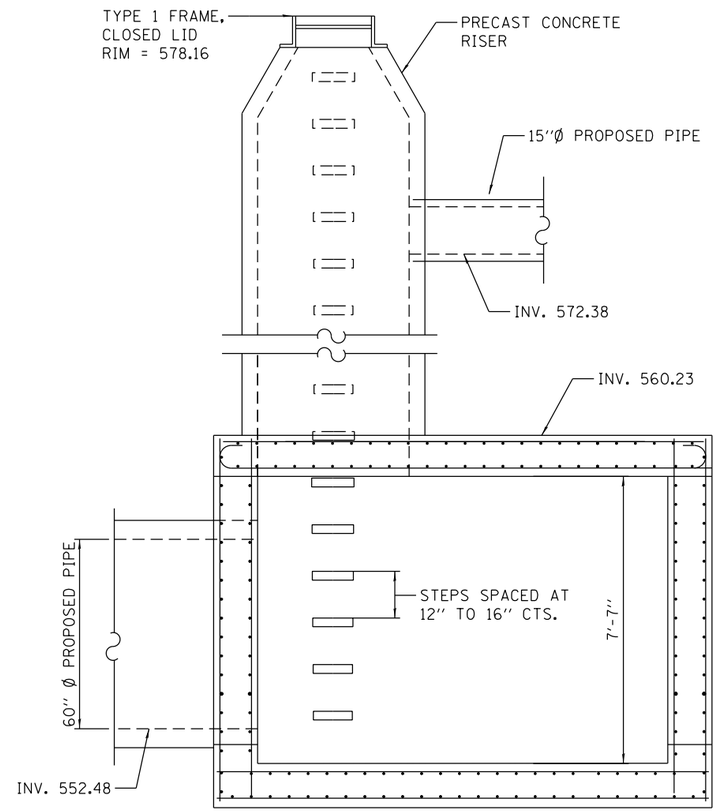

NORTH SIDE WALL SECTION

RISER DETAIL

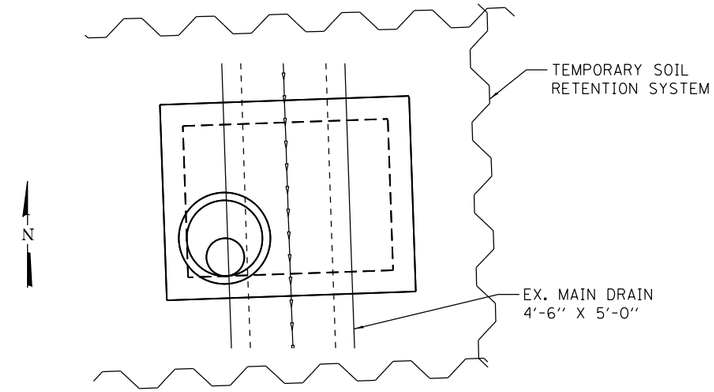

PLAN

BILL OF MATERIAL

ITEM	LENGTH	QUANTITY
CONCRETE REMOVAL	CU YD	5.1
JUNCTION CHAMBER NO. 1	EACH	1

NOTES:

1. ALL INVERTS AND ELEVATIONS SHALL BE FIELD VERIFIED BY THE CONTRACTOR PRIOR TO ORDERING MATERIALS AND CONSTRUCTION. THIS WORK WILL NOT BE PAID FOR SEPARATELY, BUT SHALL BE INCLUDED WITHIN THE CONTRACT UNIT PRICE FOR JUNCTION CHAMBER NO. 1.
2. THE COST OF DRILLING AND GROUTING REINFORCEMENT IN PLACE SHALL BE INCLUDED WITH THE CONTRACT UNIT PRICE FOR JUNCTION CHAMBER NO. 1.
3. THE SOIL RETENTION SYSTEM IS PAID FOR SEPARATELY. SEE DETENTION TANK ACCIDENT INVESTIGATION SITE SHEETS AND SOIL RETENTION SYSTEM SPECIAL PROVISION FOR MORE INFORMATION.

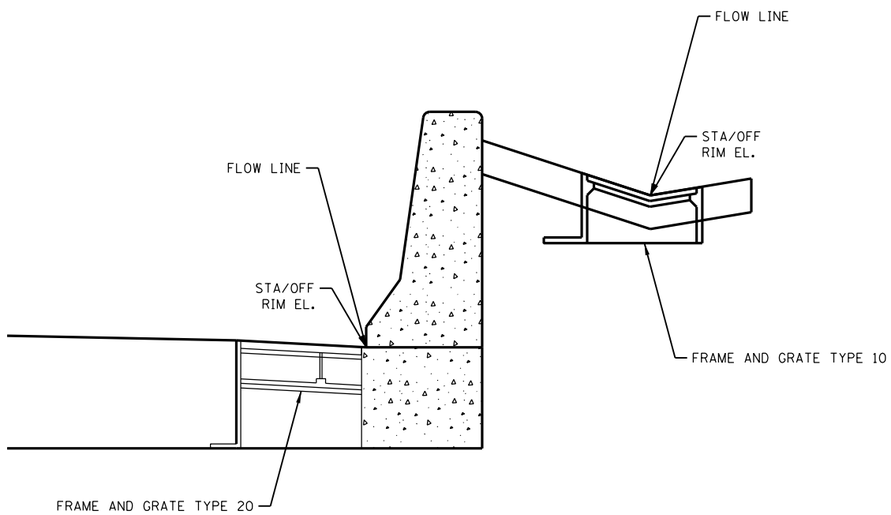

STATION, OFFSET, AND RIM ELEVATION LOCATION
FOR DRAINAGE STRUCTURES ADJACENT TO CONCRETE BARRIER WALL

NOTES:

1. SEE PROPOSED DRAINAGE STRUCTURE SCHEDULE FOR STATION, OFFSET, AND RIM ELEVATION INFORMATION.
2. SEE ROADWAY PLAN SHEETS AND ROADWAY BARRIER DETAILS FOR CONCRETE BARRIER, CONCRETE BARRIER BASE AND GUTTER INFORMATION.

PLAN VIEW
STAGE 1A

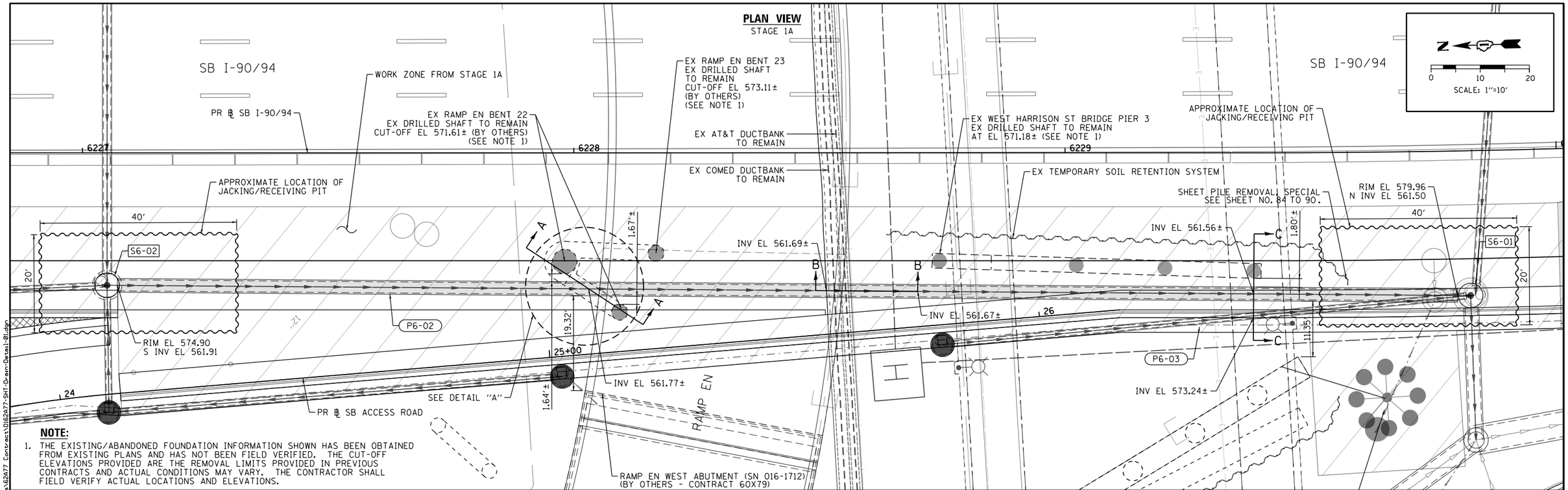

NOTE:

1. THE EXISTING/ABANDONED FOUNDATION INFORMATION SHOWN HAS BEEN OBTAINED FROM EXISTING PLANS AND HAS NOT BEEN FIELD VERIFIED. THE CUT-OFF ELEVATIONS PROVIDED ARE THE REMOVAL LIMITS PROVIDED IN PREVIOUS CONTRACTS AND ACTUAL CONDITIONS MAY VARY. THE CONTRACTOR SHALL FIELD VERIFY ACTUAL LOCATIONS AND ELEVATIONS.

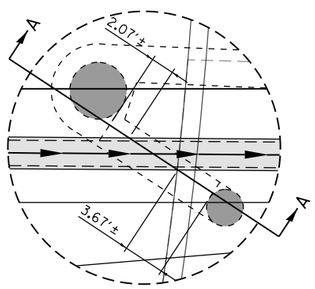

DETAIL "A"

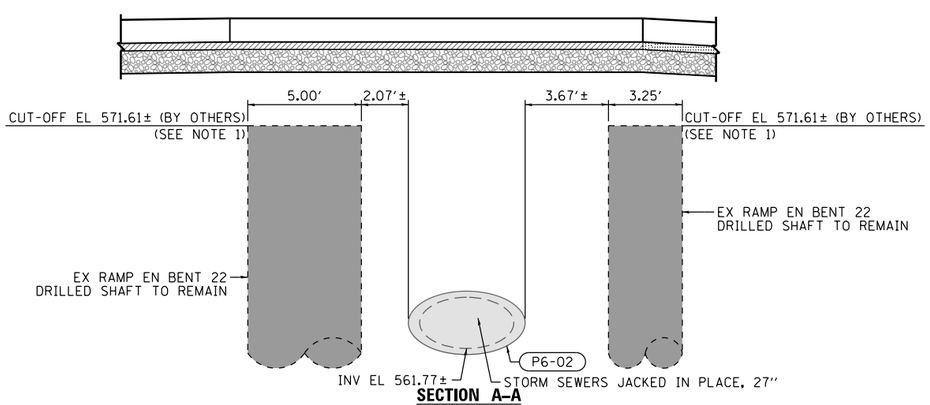

SECTION A–A

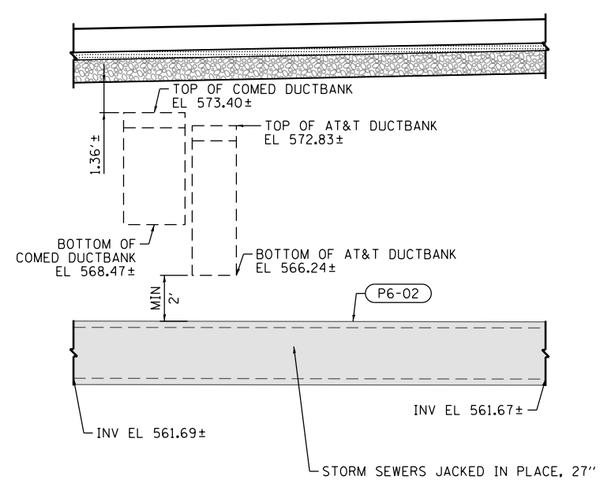

SECTION B–B

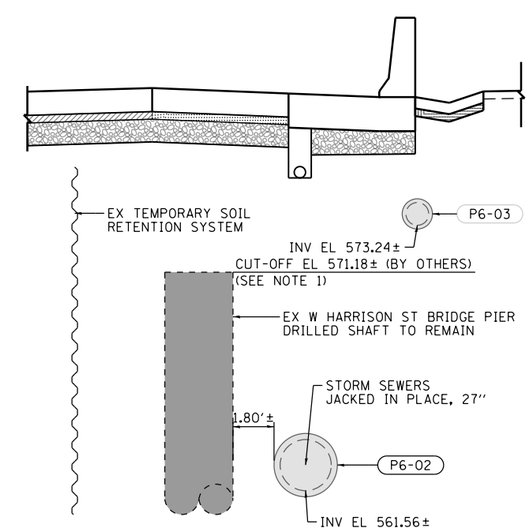

SECTION C–C

AECOM
303 EAST WACKER DRIVE, SUITE 1400
CHICAGO, IL 60601-5276
PHONE: (312) 373-7700 FAX: (312) 373-6800

D162A77-SHT-Drain-Detail-01.dgn	DESIGNED - AFC	REVISED -	
USER NAME = chiua	DRAWN - AFC	REVISED -	
PLOT SCALE = 20.0000 ' / in.	CHECKED - MJE	REVISED -	
PLOT DATE = 1/31/2020	DATE - 1/29/2019	REVISED -	

STATE OF ILLINOIS
DEPARTMENT OF TRANSPORTATION

DRAINAGE DETAILS
STORM SEWER TO BE JACKED

SCALE: 1"=10' | SHEET 1 OF 1 SHEETS | STA. TO STA.

F.A.I. RTE.	SECTION	COUNTY	TOTAL SHEETS	SHEET NO.
90/94/290	2015-018R	COOK	1360	556

CONTRACT NO. 62A77

ILLINOIS FED. AID PROJECT

FILE PATH = pw:\\AECOM-NA-AWS1.aecomonline.local:AECOM_DS02_NA\Documents\01 Americas\Transportation\60269938 Circle\Phase II\000_CAD\006_Roadway\Sheets\62A77 Contract\D162A77-SHT-Drain-Detail-01.dgn

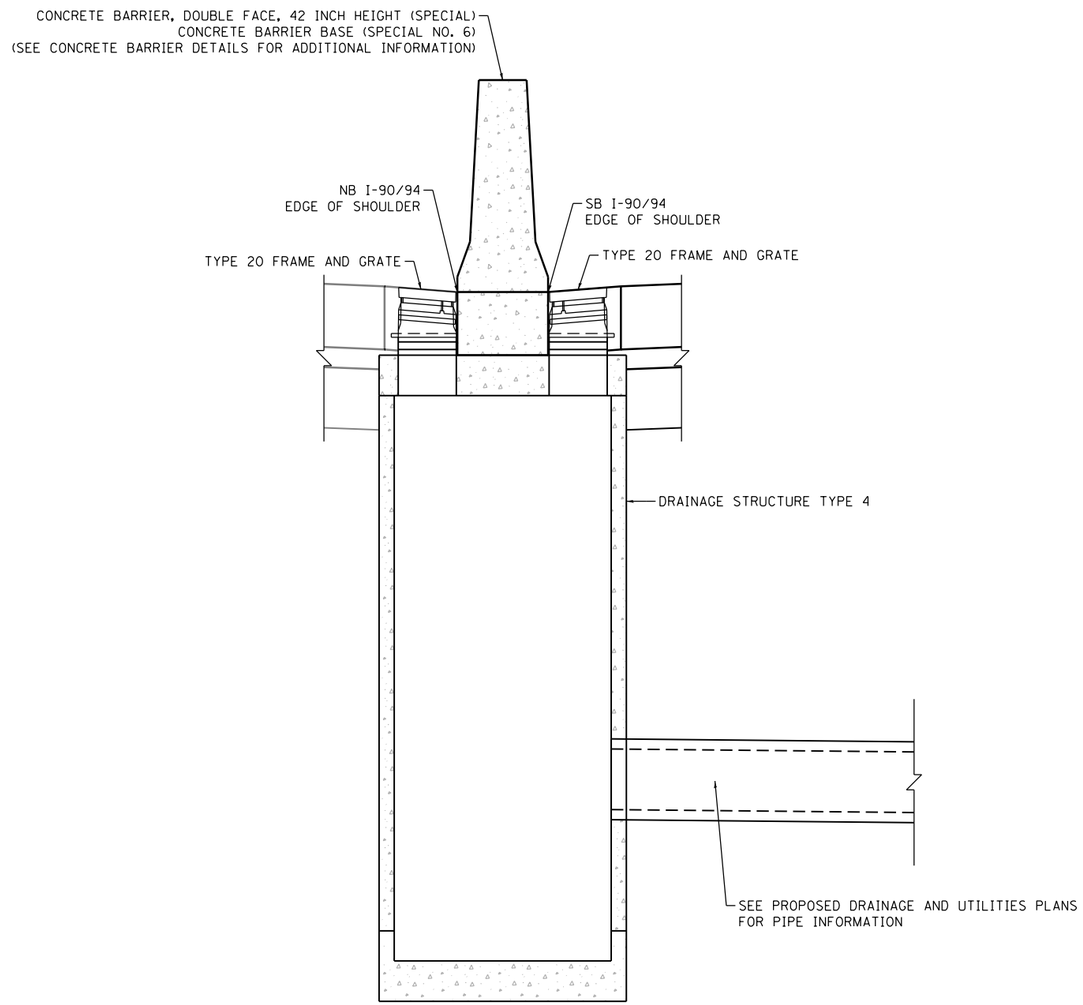

STRUCTURE NO.	STATIONING	SB EDGE OF SHOULDER		NB EDGE OF SHOULDER	
		OFFSET	RIM EL (FT)	OFFSET	RIM EL (FT)
S9-02	6243+50.00	38.00' LT	575.73	41.00' LT	576.90
S9-12	6245+00.00	38.00' LT	574.84	41.00' LT	575.30
S9-23	6247+20.00	38.00' LT	575.07	41.00' LT	574.82
S10-03	6248+00.00	38.00' LT	575.62	41.00' LT	575.23

NOTE: ALL STATIONING IS BASED FROM SB I-90/94

FILE PATH = pw:\\AECOM-NA-AWS1.aecomonline.local:AECOM_DS02_NA\Documents\01 Americas\Transportation\60269938 Circle\Phase_II\002.CAD\006.Roadway\Sheets\62A77 Contracts\D162A77-SHT-Drain-Detail-02.dgn

AECOM
303 EAST WACKER DRIVE, SUITE 1400
CHICAGO, IL 60601-5276
PHONE: (312) 373-7700 FAX: (312) 373-6800

D162A77-SHT-Drain-Detail-02.dgn	DESIGNED - AFC	REVISED -	
USER NAME = chiua	DRAWN - AFC	REVISED -	
PLOT SCALE = 10.0000 ' / in.	CHECKED - MJE	REVISED -	
PLOT DATE = 1/31/2020	DATE - 1/29/2019	REVISED -	

STATE OF ILLINOIS
DEPARTMENT OF TRANSPORTATION

DRAINAGE DETAIL – DRAINAGE STRUCTURES, TYPE 4
WITH TWO TYPE 20 FRAME AND GRATES ELEVATIONS

SCALE: NTS | SHEET 1 OF 1 SHEETS | STA. TO STA.

F.A.I. RTE.	SECTION	COUNTY	TOTAL SHEETS	SHEET NO.
90/94/290	2015-018R	COOK	1360	557
		CONTRACT NO. 62A77		
	ILLINOIS	FED. AID PROJECT		

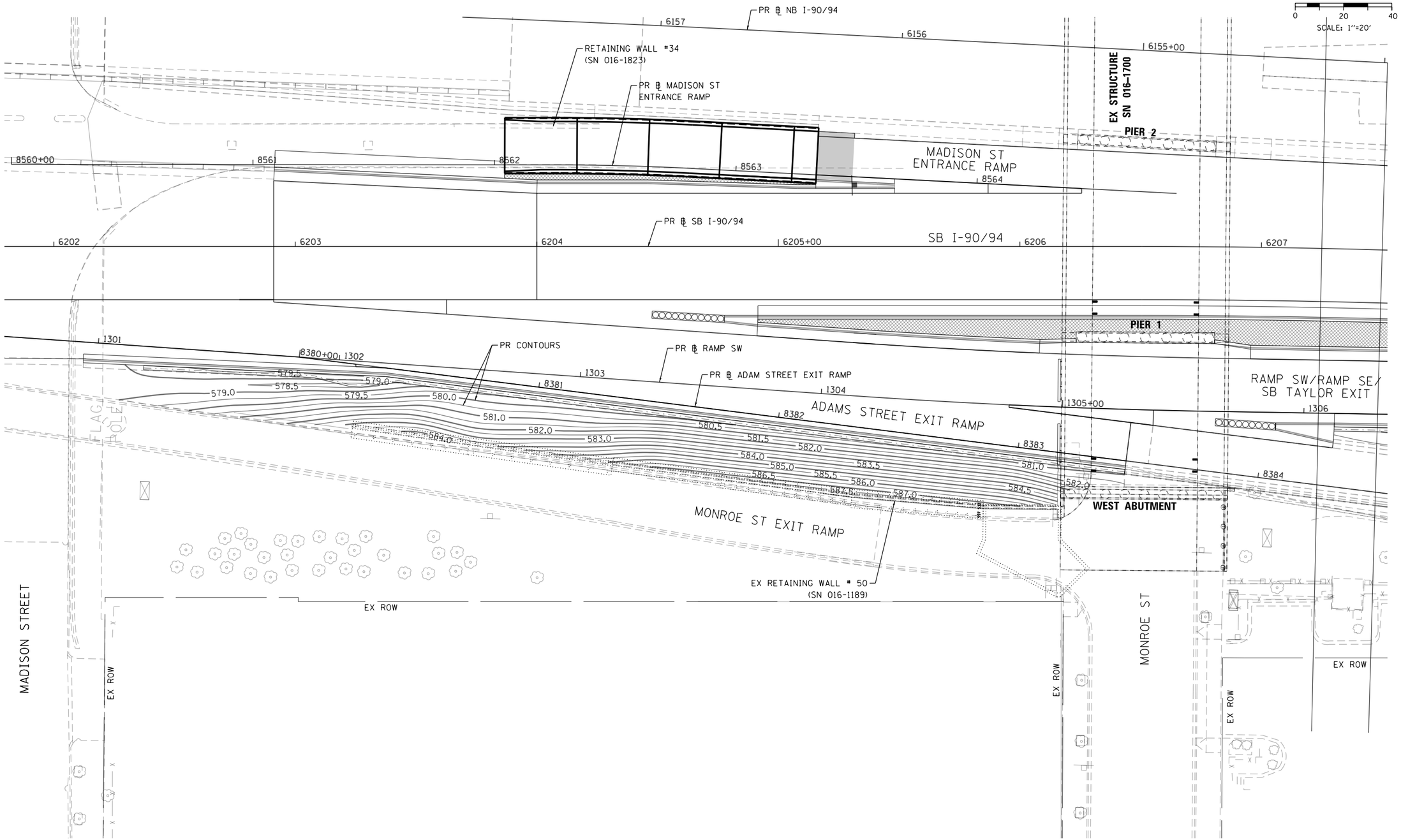

FILE PATH = pw:\\AECOM-NA-AWS1.aecomonline.local:AECOM_DS02_NA\Documents\01 Americas\Transportation\60269938 Circle\Phase II\000.CAD\006.Roadway\Sheets\62A77 Contracts\D162A77-SHT-InField-Grading-00.dgn

AECOM
303 EAST WACKER DRIVE, SUITE 1400
CHICAGO, IL 60601-5276
PHONE: (312) 373-7700 FAX: (312) 373-6800

D162A77-SHT-InField-Grading-00.dgn	DESIGNED - SDH	REVISED -	
USER NAME = dishevaz	DRAWN - AFC	REVISED -	
PLOT SCALE = 40.0000 ' / in.	CHECKED - MJE	REVISED -	
PLOT DATE = 1/31/2020	DATE - 1/29/2019	REVISED -	

STATE OF ILLINOIS
DEPARTMENT OF TRANSPORTATION

INFIELD GRADING

SCALE: 1"=20' | SHEET 1 OF $IGRSHEETS | STA. | TO STA.

F.A.I. RTE.	SECTION	COUNTY	TOTAL SHEETS	SHEET NO.
90/94/290	2015-018R	COOK	1360	558

CONTRACT NO. 62A77

ILLINOIS FED. AID PROJECT

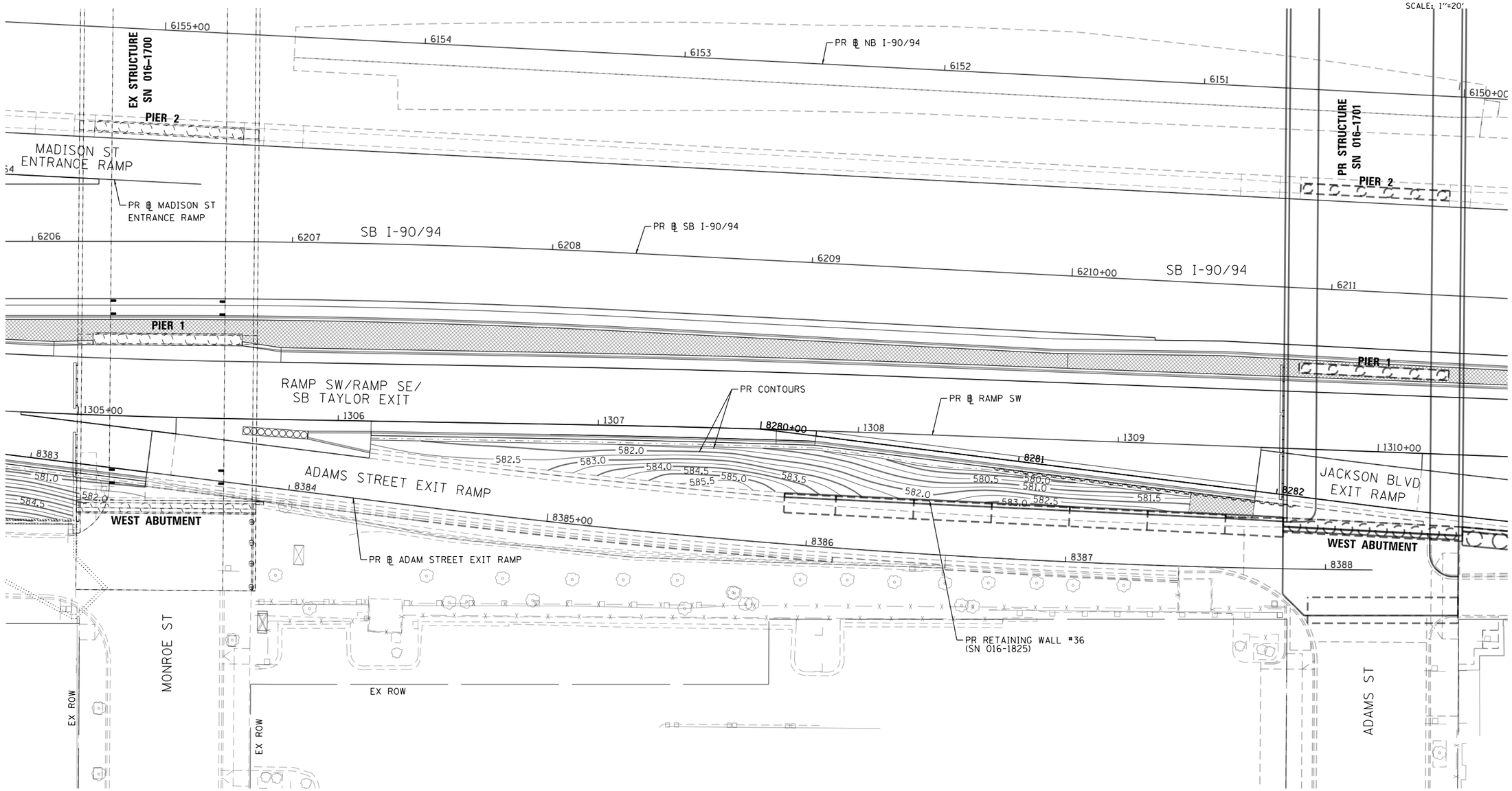

FILE PATH = pw:\\AECOM-NA-AWS1.aecomonline.local:AECOM.DS02.NA\Documents\01 Americas\Transportation\60269938 Circle\Phase.II\000.CAD\006.Roadway\Sheets\62A77 Contract\D162A77-SHT-InField-Grading-00A.dgn

AECOM 303 EAST WACKER DRIVE, SUITE 1400 CHICAGO, IL 60601-5276 PHONE: (312) 373-7700 FAX: (312) 373-6800	D162A77-SHT-InField-Grading-00A.dgn	DESIGNED - AFC	REVISED -	STATE OF ILLINOIS DEPARTMENT OF TRANSPORTATION	INFIELD GRADING	F.A.I. RTE.	SECTION	COUNTY	TOTAL SHEETS	SHEET NO.
	USER NAME = chiua	DRAWN - AFC	REVISED -			90/94/290	2015-018R	COOK	1360	559
	PLOT SCALE = 40.0000 ' / in.	CHECKED - MJE	REVISED -					CONTRACT NO. 62A77		
	PLOT DATE = 1/31/2020	DATE - 1/29/2019	REVISED -		SCALE: 1"=20' SHEET 2 OF 8 SHEETS STA. TO STA.		ILLINOIS	FED. AID PROJECT		

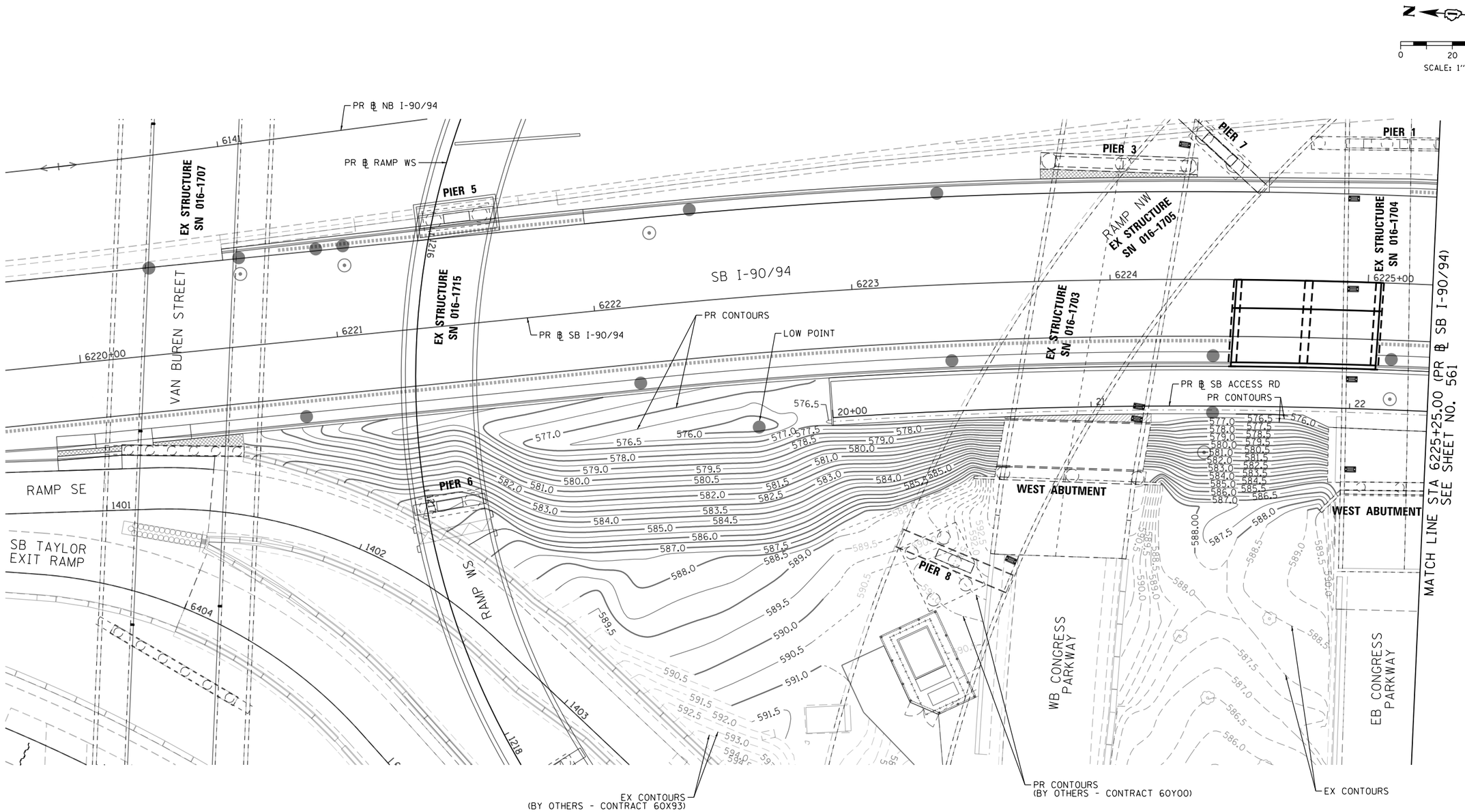

FILE PATH = pw:\\AECOM-NA-ANS\aecomonline.local\AECOM_DS02_NA\Documents\01 Americas\Transportation\60269938 Circle\Phase II\000 CAD\006 Roadway\Sheets\62A77 Contracts\D162A77-SHT-InField-Grading-01.dgn

AECOM
303 EAST WACKER DRIVE, SUITE 1400
CHICAGO, IL 60601-5276
PHONE: (312) 373-7700 FAX: (312) 373-6800

D162A77-SHT-InField-Grading-01.dgn	DESIGNED - SDH	REVISED -	
USER NAME = ChiuA	DRAWN - AFC	REVISED -	
PLOT SCALE = 40.0000 ' / in.	CHECKED - MJE	REVISED -	
PLOT DATE = 3/9/2020	DATE - 3/4/2020	REVISED -	

STATE OF ILLINOIS
DEPARTMENT OF TRANSPORTATION

INFIELD GRADING

SCALE: 1"=20' | SHEET 3 OF $IGRDSHEETS | STA. 6221+05.00 TO STA. 6226+75.00

F.A.I. RTE.	SECTION	COUNTY	TOTAL SHEETS	SHEET NO.
90/94/290	2015-018R	COOK	1360	560

CONTRACT NO. 62A77

ILLINOIS FED. AID PROJECT

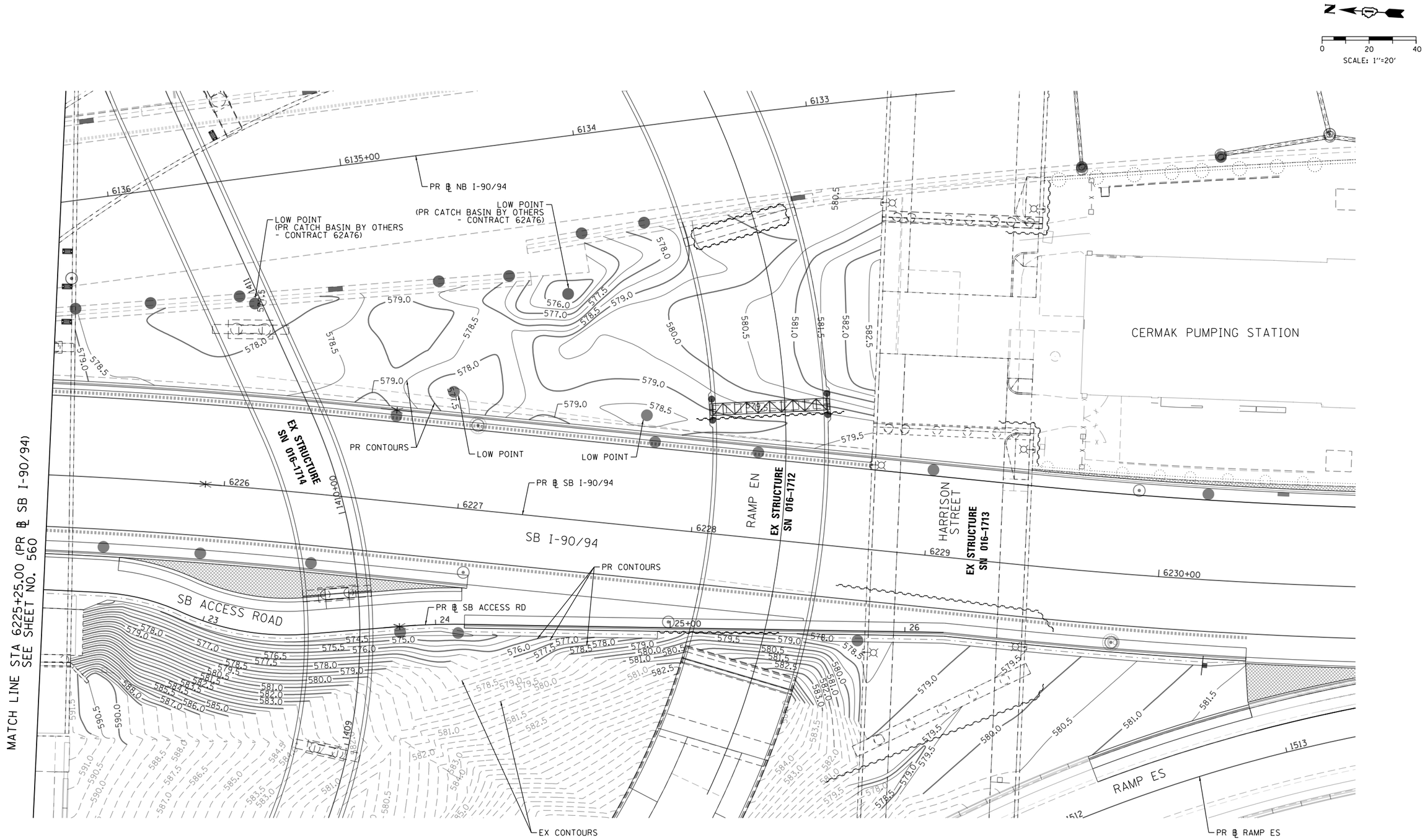

FILE PATH = pw:\\AECOM-NA-AWS1.aecomonline.local:AECOM_DS02_NA\Documents\01 Americas\Transportation\60269938 Circle\Phase_II\000_CAD\006_Roadway\Sheets\62A77 Contracts\D162A77-SHT-InField-Grading-02.dgn

AECOM
303 EAST WACKER DRIVE, SUITE 1400
CHICAGO, IL 60601-5276
PHONE: (312) 373-7700 FAX: (312) 373-6800

D162A77-SHT-InField-Grading-02.dgn	DESIGNED - SDH	REVISED -	
USER NAME = ChuuA	DRAWN - AFC	REVISED -	
PLOT SCALE = 40.0000 ' / in.	CHECKED - MJE	REVISED -	
PLOT DATE = 3/10/2020	DATE - 3/4/2020	REVISED -	

STATE OF ILLINOIS
DEPARTMENT OF TRANSPORTATION

INFIELD GRADING

SCALE: 1"=20' | SHEET 3 OF 13 SHEETS | STA. 6221+05.00 TO STA. 6226+75.00

F.A.I. RTE.	SECTION	COUNTY	TOTAL SHEETS	SHEET NO.
90/94/290	2015-018R	COOK	1360	561

CONTRACT NO. 62A77

ILLINOIS FED. AID PROJECT

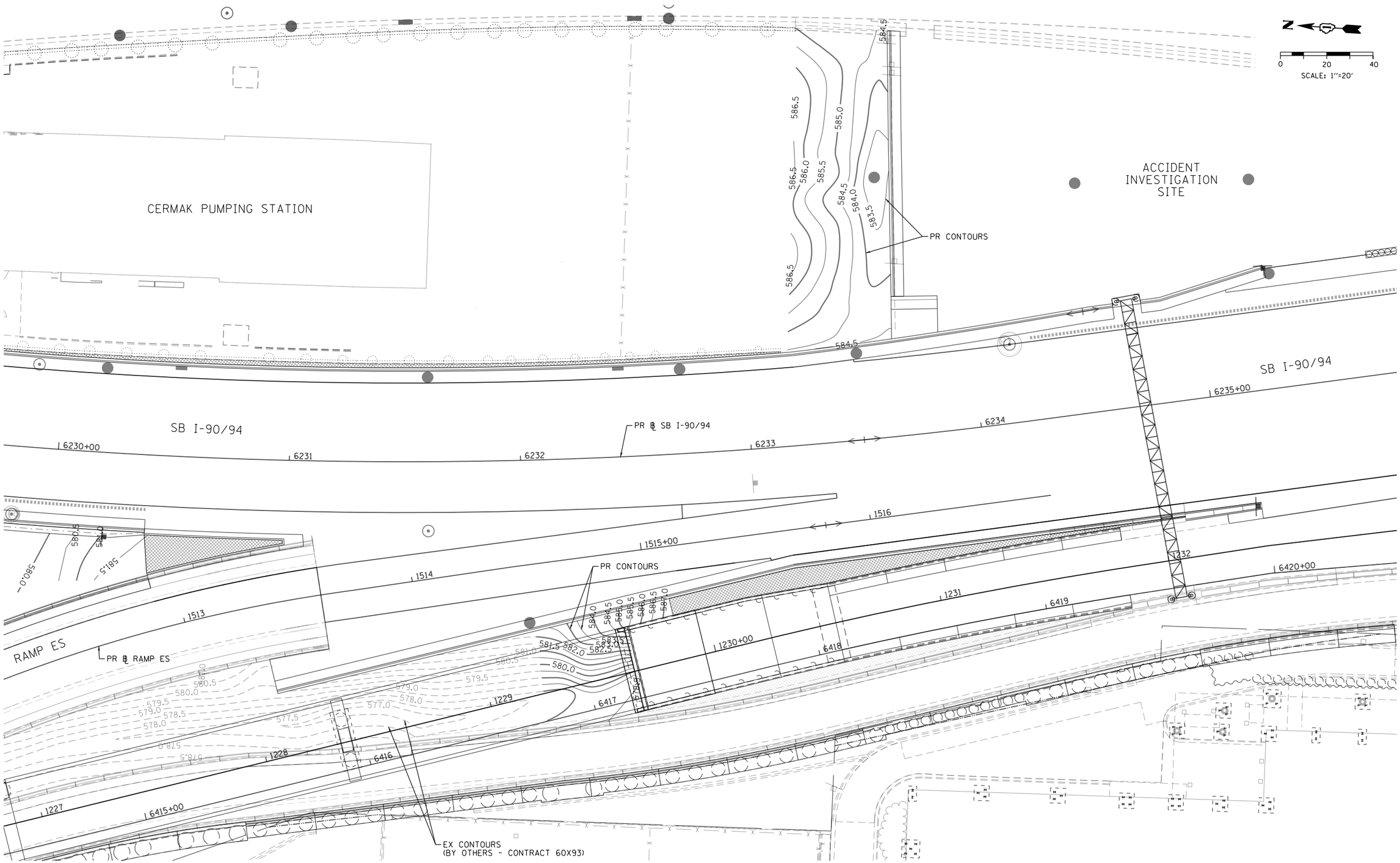

FILE PATH = pw:\\AECOM-NA-AWS1.aecomonline.local:AECOM_DS02_NA\Documents\01 Americas\Transportation\60269938 Circle\Phase II\000 CAD\006 Roadway\Sheets\62A77 Contracts\D162A77-SHT-InField-Grading-02A.dgn

AECOM
303 EAST WACKER DRIVE, SUITE 1400
CHICAGO, IL 60601-5276
PHONE: (312) 373-7700 FAX: (312) 373-6800

D162A77-SHT-InField-Grading-02A.dgn	DESIGNED - SDH	REVISED -	
USER NAME = chua	DRAWN - AFC	REVISED -	
PLOT SCALE = 40.0000 ' / in.	CHECKED - MJE	REVISED -	
PLOT DATE = 1/31/2020	DATE - 1/29/2019	REVISED -	

STATE OF ILLINOIS
DEPARTMENT OF TRANSPORTATION

INFIELD GRADING

SCALE: 1"=20' | SHEET 4 OF 8 IGRD SHEETS | STA. 6221+05.00 TO STA. 6226+75.00

F.A.I. RTE.	SECTION	COUNTY	TOTAL SHEETS	SHEET NO.
90/94/290	2015-018R	COOK	1360	562

CONTRACT NO. 62A77

ILLINOIS FED. AID PROJECT

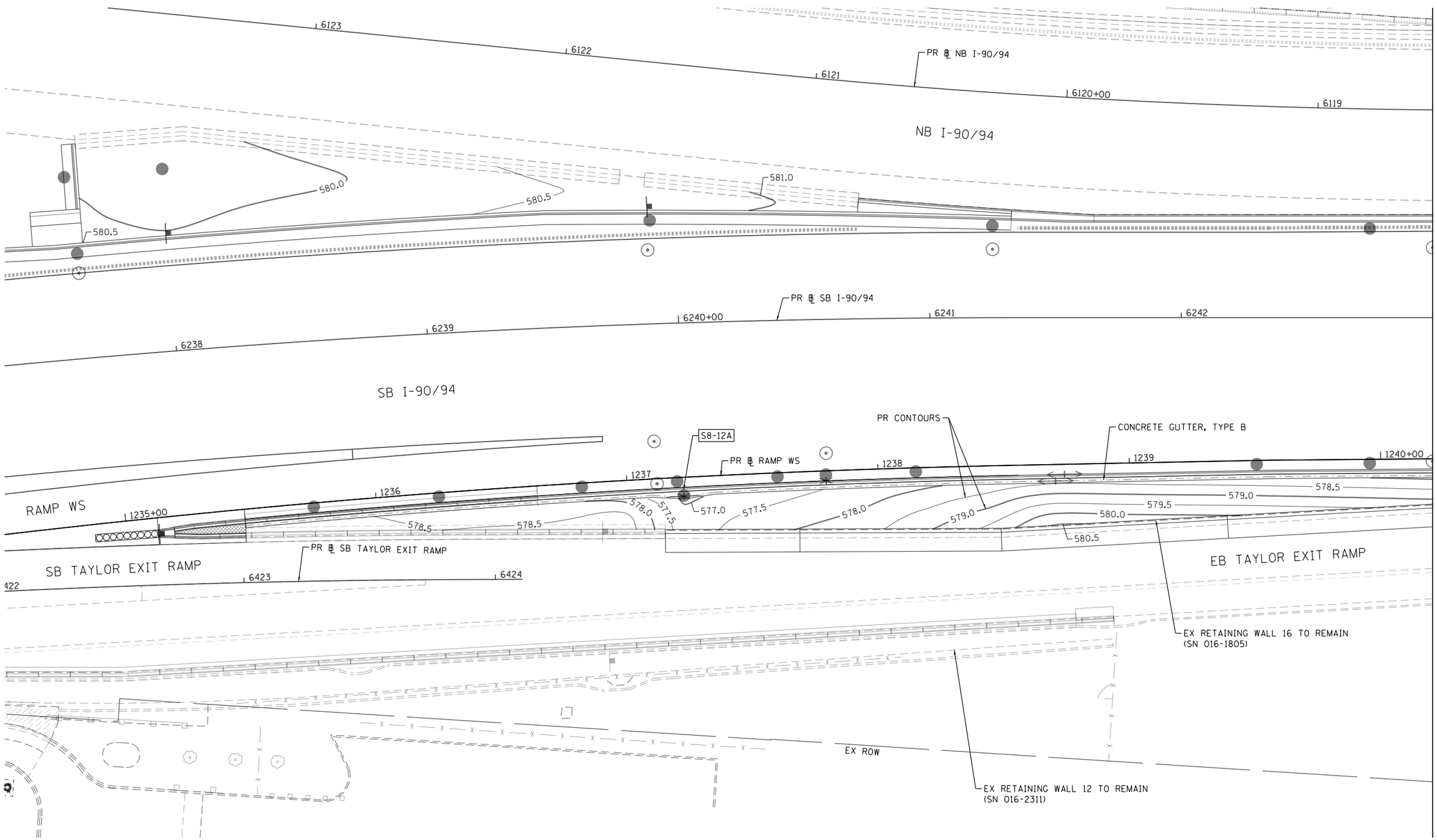

FILE PATH = pw:\\AECOM-NA-AWSi.aecomonline.local:AECOM_DS02_NA\Documents\01 Americas\Transportation\60269938 Circle\Phase_II\000_CAD\006_Roadway\Sheets\62A77 Contracts\D162A77-SHT-InField-Grading-03.dgn

AECOM
303 EAST WACKER DRIVE, SUITE 1400
CHICAGO, IL 60601-5276
PHONE: (312) 373-7700 FAX: (312) 373-6800

D162A77-SHT-InField-Grading-03.dgn	DESIGNED - SDH	REVISED -	
USER NAME = chiua	DRAWN - AFC	REVISED -	
PLOT SCALE = 40.0000 ' / in.	CHECKED - MJE	REVISED -	
PLOT DATE = 1/31/2020	DATE - 1/29/2019	REVISED -	

STATE OF ILLINOIS
DEPARTMENT OF TRANSPORTATION

INFIELD GRADING

SCALE: | SHEET 6 OF 8 SHEETS | STA. | TO STA.

F.A.I. RTE.	SECTION	COUNTY	TOTAL SHEETS	SHEET NO.
90/94/290	2015-018R	COOK	1360	563

CONTRACT NO. 62A77

ILLINOIS FED. AID PROJECT

MATCH LINE STA 6243+00.00 (PR ℄ SB I-90/94)
SEE SHEET NO. 563

MATCH LINE STA 6248+50.00 (PR ℄ SB I-90/94)
SEE SHEET NO. 565

6118 6117 6116 6115+00 6114

PR ℄ NB I-90/94

NB I-90/94

SB I-90/94

6243 6244 6245+00 6246 6247 6248

PR ℄ SB I-90/94

PR DMS

EX STRUCTURE
SN 016-1165

TAYLOR STREET

PR CONTOURS

CONCRETE GUTTER, TYPE B

PR CONTOURS

1241 1242 1243 1244 1245+00

578.0 578.0 578.5 578.0 577.5 577.0 576.5 578.0 579.0 579.0 579.5 580.0 580.5 581.0 581.5 582.0 582.5 583.0 583.5 584.0 584.5 585.0 585.5 586.0 586.5

EB TAYLOR EXIT RAMP

EX RETAINING WALL 16 TO REMAIN
(SN 016-1805)

S9-20A

UNION AVENUE

EX RETAINING WALL 17 TO REMAIN
(SN 016-1806)

N

0 20 40
SCALE: 1"=20'

FILE PATH = pw:\\AECOM-NA-AWS\aecomonline.local\AECOM_DS02_NA\Documents\01 Americas\Transportation\60269938 Circle\Phase_II\000_CAD\006_Roadway\Sheets\62A77 Contracts\D162A77-SHT-InField-Grading-04.dgn

AECOM
303 EAST WACKER DRIVE, SUITE 1400
CHICAGO, IL 60601-5276
PHONE: (312) 373-7700 FAX: (312) 373-6800

D162A77-SHT-InField-Grading-04.dgn	DESIGNED - SDH	REVISED -	
USER NAME = chiua	DRAWN - AFC	REVISED -	
PLOT SCALE = 40.0000 ' / in.	CHECKED - MJE	REVISED -	
PLOT DATE = 1/31/2020	DATE - 1/29/2019	REVISED -	

STATE OF ILLINOIS
DEPARTMENT OF TRANSPORTATION

INFIELD GRADING

SCALE: 1"=20' | SHEET 6 OF 8 IGR SHEETS | STA. 6221+05.00 TO STA. 6226+75.00

F.A.I. RTE.	SECTION	COUNTY	TOTAL SHEETS	SHEET NO.
90/94/290	2015-018R	COOK	1360	564

CONTRACT NO. 62A77

ILLINOIS FED. AID PROJECT

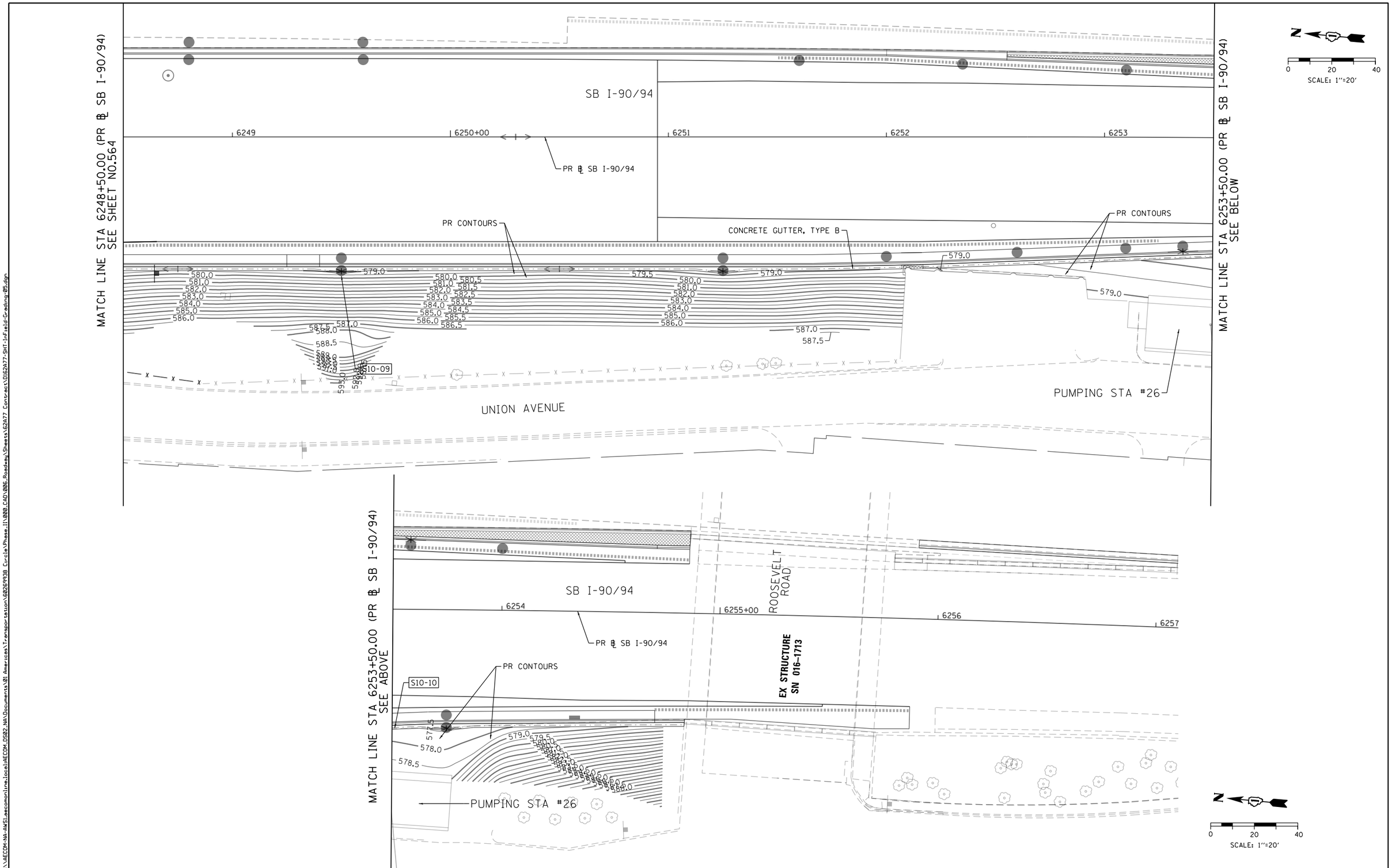

FILE PATH = pw:\\AECOM-NA-AWS1.aecomonline.local:AECOM.DS02.NA\Documents\01 Americas\Transportation\60269938 Circle\Phase.II\000.CAD\006.Roadway\Sheets\62A77 Contract\D162A77-SHT-InField-Grading-05.dgn

AECOM
303 EAST WACKER DRIVE, SUITE 1400
CHICAGO, IL 60601-5276
PHONE: (312) 373-7700 FAX: (312) 373-6800

D162A77-SHT-InField-Grading-05.dgn	DESIGNED - SDH	REVISED -	
USER NAME = chiua	DRAWN - AFC	REVISED -	
PLOT SCALE = 40.0000 ' / in.	CHECKED - MJE	REVISED -	
PLOT DATE = 1/31/2020	DATE - 1/29/2019	REVISED -	

STATE OF ILLINOIS
DEPARTMENT OF TRANSPORTATION

INFIELD GRADING

SCALE: 1"=20' | SHEET 6 OF 8 SHEETS | STA. 6221+05.00 TO STA. 6226+75.00

F.A.I. RTE.	SECTION	COUNTY	TOTAL SHEETS	SHEET NO.
90/94/290	2015-018R	COOK	1360	565
		CONTRACT NO. 62A77		
		ILLINOIS FED. AID PROJECT		

ROUTE NO.	SECTION	COUNTY	TOTAL SHEETS	SHEET NO.
F.A.I.-94	92526.6-IP	COOK	119	31
FED. ROAD DIV. NO. 4	ILLINOIS	PROJECT I-94-3(18)-51		

Note: Frontage Road 'B' Drainage to be Connected to Existing Drain Starts in Existing Union Ave. Sewer.

For Details & Locations of Special Manholes See Sheets S-25, 26, 27, 28.

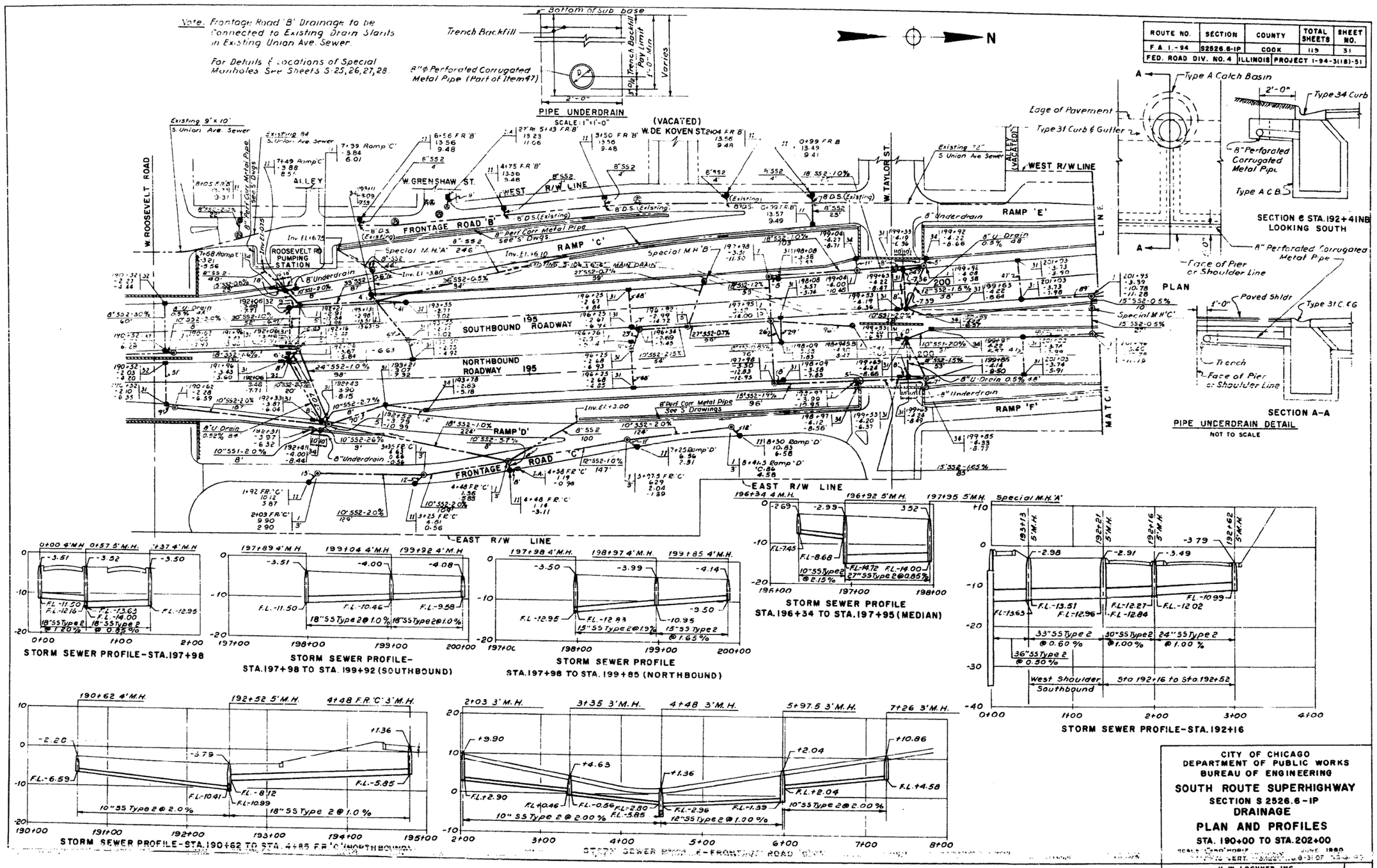

CITY OF CHICAGO
DEPARTMENT OF PUBLIC WORKS
BUREAU OF ENGINEERING

SOUTH ROUTE SUPERHIGHWAY
SECTION S 2526.6-IP
DRAINAGE

PLAN AND PROFILES
STA. 190+00 TO STA. 202+00

SCALE: 1"=20' HORIZ. 1"=5' VERT. JUNE 1960
DATE: 1-29-07

H. W. LOCHNER, INC.
ENGINEERS
CHICAGO, ILL.

FOR INFORMATION ONLY

FILE PATH = pw:\\AECOM-NA-AWS\aecomonline.local\AECOM_DS02_NA\Documents\01 Americas\Transportation\60269938 Circle\Phase_II\000.CAD\006_Roadway\Sheets\62677 Contracts\D162677-SHT-EX-MAINDRAIN-1959-01.dgn

AECOM
303 EAST WACKER DRIVE, SUITE 1400
CHICAGO, IL 60601-5276
PHONE: (312) 373-7700 FAX: (312) 373-6800

D162677-SHT-EX-MAINDRAIN-1959-01.dgn	DESIGNED -	REVISED -	
USER NAME = ChiuA	DRAWN -	REVISED -	
PLOT SCALE = 40.0000 ' / in.	CHECKED -	REVISED -	
PLOT DATE = 1/29/2020	DATE - 1/29/2019	REVISED -	

STATE OF ILLINOIS
DEPARTMENT OF TRANSPORTATION

EXISTING MAIN DRAIN PLANS

SCALE: | SHEET 1 OF 14 SHEETS | STA. | TO STA.

F.A.I. RTE.	SECTION	COUNTY	TOTAL SHEETS	SHEET NO.
90/94/290	2015-018R	COOK	1360	567
		CONTRACT NO. 62A77		
		ILLINOIS FED. AID PROJECT		

ROUTE NO.	SECTION	COUNTY	TOTAL SHEETS	SHEET NO.
F.A.I.-94	2526.6-1P	COOK	119	32
FED. ROAD DIV. NO. 6	ILLINOIS	PROJECT I-94-3(18)-91		

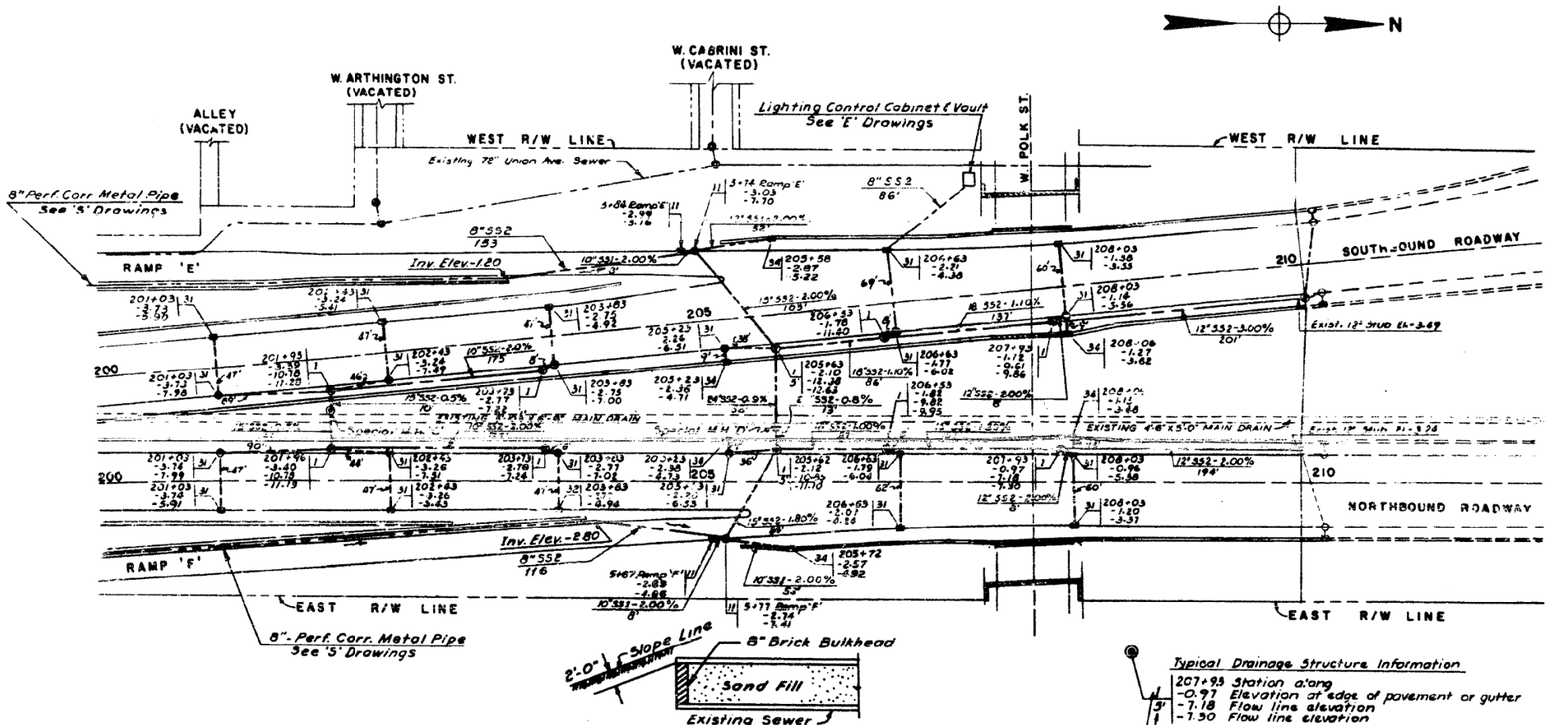

DETAIL OF BULKHEAD LOCATION
For Sewers Greater than 2'-0" Not to Scale

Typical Drainage Structure Information
207+93 Station along
-0.97 Elevation at edge of pavement or gutter
5' -7.18 Flow line elevation
-7.30 Flow line elevation
Size of Manhole
Type of Frame and Grate

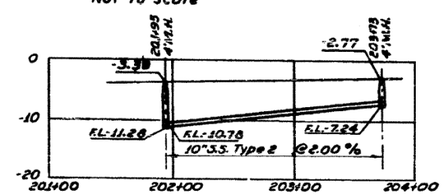

STORM SEWER PROFILE
STA. 201+00 TO STA. 204+00 (SOUTHBOUND)

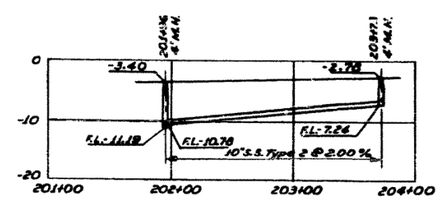

STORM SEWER PROFILE
STA. 201+00 TO STA. 204+00 (NORTHBOUND)

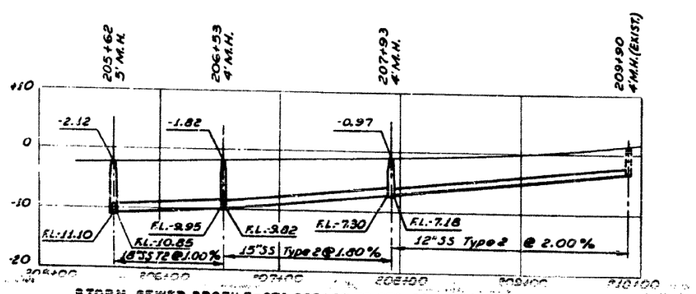

STORM SEWER PROFILE-STA. 205+62 TO STA. 209+90 (NORTHBOUND)

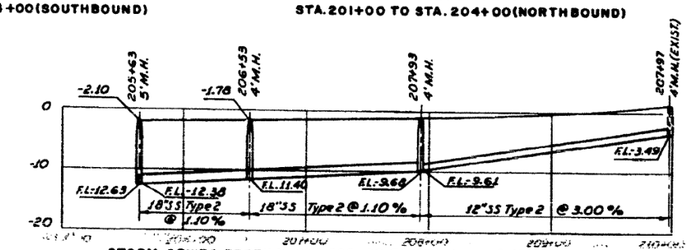

STORM SEWER PROFILE-STA. 205+63 TO STA. 209+97 (SOUTHBOUND)

DRAINAGE NOTES:

ALL INLETS FOR NORTH AND SOUTH BOUND ROADWAYS AND RAMPS SHALL BE INLETS TYPE A.

ALL INLETS FOR CITY STREETS SHALL BE INLET ASSEMBLIES WITH A TYPE 4 GRATE AND BEND.

ALL CONNECTIONS FROM INLET ASSEMBLIES TO TYPE A CATCH BASINS SHALL BE MADE WITH 8-INCH STORM SEWER, TYPE 1.

ALL CONNECTIONS FROM TYPE A INLET TO TYPE A CATCH BASINS SHALL BE MADE WITH 8-INCH STORM SEWER, TYPE 1 AT A MINIMUM SLOPE OF 2 PER CENT EXCEPT AS NOTED.

CONNECTIONS FROM TYPE A CATCH BASINS TO TYPE A MANHOLES SHALL BE MADE WITH 10-INCH STORM SEWER TYPE 2 AT A MINIMUM SLOPE OF 2 PER CENT EXCEPT AS NOTED.

ALL CONNECTIONS FROM INLETS TO CATCH BASINS SHALL BE TYPE 1 STORM SEWER AND PAID FOR AS SUCH REGARDLESS OF COVER.

ALL CONNECTIONS FROM CATCH BASINS TO MANHOLES OR STORM SEWERS SHALL BE TYPE 2 STORM SEWER AND PAID FOR AS SUCH REGARDLESS OF COVER.

STORM SEWER GRADES ARE FIGURED FROM CENTER TO CENTER OF DRAINAGE STRUCTURES.

ALL MANHOLES ARE TO BE TYPE A MANHOLES WITH A TYPE 1 FRAME AND OPEN LID UNLESS OTHERWISE NOTED. CITY STREET MANHOLES AND INLETS HAVE A 2-FOOT DIAMETER. EXPRESSWAY MANHOLES ARE TO BE 4-FOOT DIAMETER UNLESS OTHERWISE NOTED.

DRAINAGE STRUCTURE ELEVATIONS SHALL BE MODIFIED TO MEET FINISHED CURB AND EDGE OF PAVEMENT GRADES.

LENGTHS OF STORM SEWER SHOWN ON PLANS ARE FROM INSIDE FACES OF DRAINAGE STRUCTURES.

TRENCHES FOR NEW SEWERS AND DRAINAGE CONNECTIONS SHOWN ON DRAINAGE SHEETS G , G , AND G SHALL BE BACKFILLED WITH GRADE 8 STONE AND PAID FOR AS TRENCH BACKFILL, ITEM

EXISTING SEWERS AND HOUSE SERVICE CONNECTIONS CUT BY EXCAVATION FOR SUPERHIGHWAY SHALL BE PLUGGED WITH 10 FEET OF CONCRETE AS PART OF ITEM 1, SPECIAL EXCAVATION AT NO ADDITIONAL COST.

STORM SEWERS MUST CLEAR ALL NEW AND EXISTING SUB-PIERS. SEE "S" DRAWINGS FOR NEW SUB-PIER LOCATIONS.

PIPE UNDERDRAINS SHALL BE 6-INCH PERFORATED CORRUGATED METAL PIPE

DRAINAGE STRUCTURE DETAILS SHOWN ON SHEETS G

FOR DETAILS AND LOCATIONS OF SPECIAL MANHOLES SEE SHEETS S-23,24,25,&26

FOR GRADES AND LOCATIONS OF DRAINS BEHIND RETAINING WALLS SEE SHEETS S

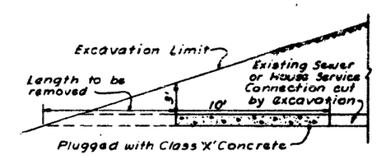

DETAIL OF CONCRETE SEWER PLUG

CITY OF CHICAGO
DEPARTMENT OF PUBLIC WORKS
BUREAU OF ENGINEERING
SOUTH ROUTE SUPERHIGHWAY
SECTION 2526.6-1P
DRAINAGE
PLAN AND PROFILES
STA. [illegible] TO STA. [illegible]
SCALE: 1" = 50' HORIZ. 1" = 10' VERT. JUNE 1960 SHEET NO. 32 OF 113 SHEETS
H. W. LOCHNER, INC. ENGINEERS CHICAGO, ILL.

FOR INFORMATION ONLY

FILE PATH = pw:\\AECOM-NA-AWS1.aecomonline.local:AECOM_DS02_NA\Documents\01 Americas\Transportation\60269338 Circle\Phase_II\000_CAD\006_Roadway\Sheets\62A77 Contracts\D162A77-SHT-EX-MAINDRAIN-1959-02.dgn

AECOM
303 EAST WACKER DRIVE, SUITE 1400
CHICAGO, IL 60601-5276
PHONE: (312) 373-7700 FAX: (312) 373-6800

D162A77-SHT-EX-MAINDRAIN-1959-02.dgn	DESIGNED -	REVISED -
USER NAME = ChuA	DRAWN -	REVISED -
PLOT SCALE = 40.0000 ' / in.	CHECKED -	REVISED -
PLOT DATE = 1/29/2020	DATE - 1/29/2019	REVISED -

STATE OF ILLINOIS
DEPARTMENT OF TRANSPORTATION

EXISTING MAIN DRAIN PLANS

SCALE: | SHEET 2 OF 14 SHEETS | STA. TO STA.

F.A.I. RTE.	SECTION	COUNTY	TOTAL SHEETS	SHEET NO.
90/94/290	2015-018R	COOK	1360	568
		CONTRACT NO. 62A77		
		ILLINOIS FED. AID PROJECT		

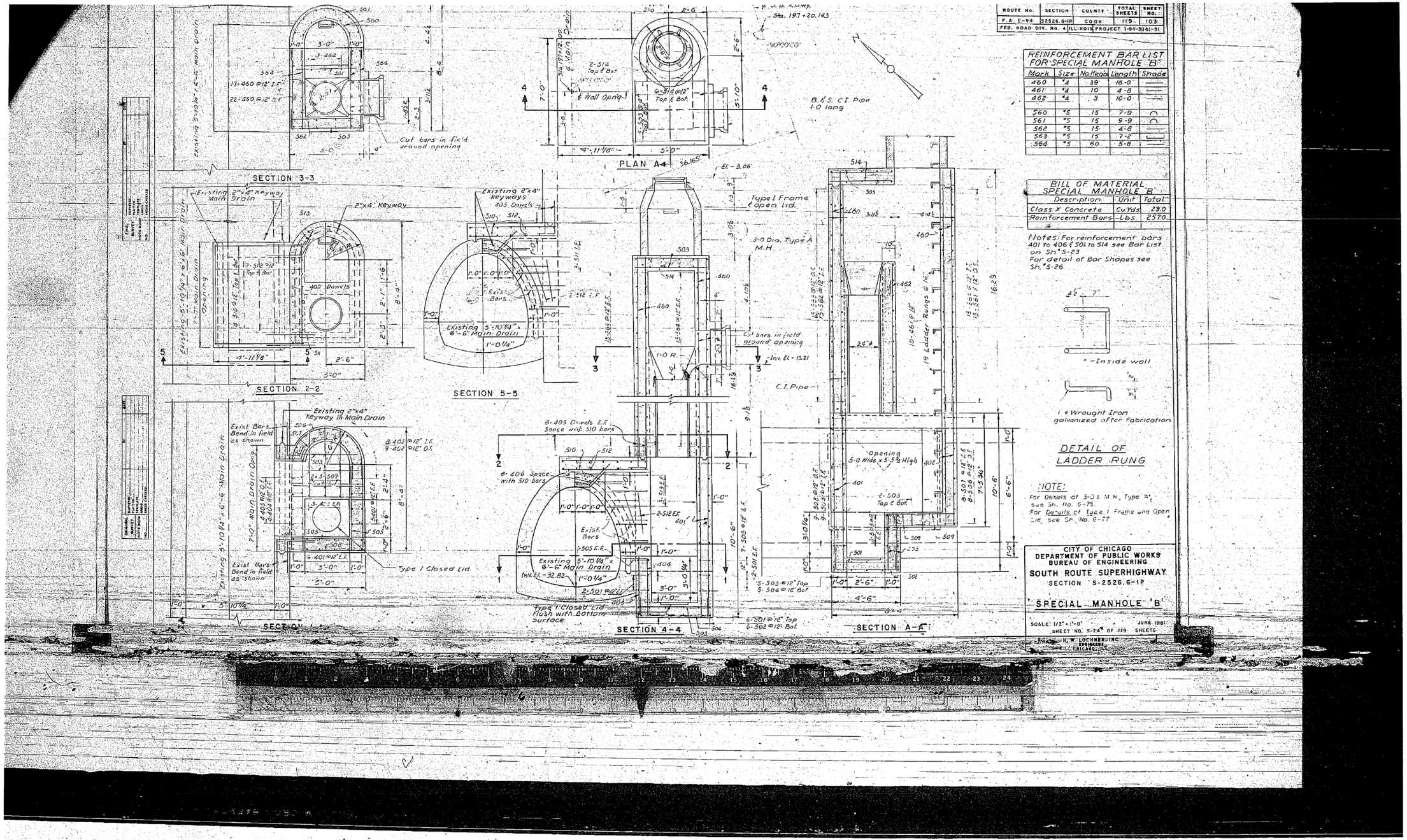

FILE PATH = pw:\\AECOM-NA-AWS1.aecomonline.local:AECOM_DS02_NA\Documents\01 Americas\Transportation\60269938 Circle\Phase II\000_CAD\006_Roadway\Sheets\62A77 Contracts\D162A77-SHT-EX-MAINDRAIN-1959-03.dgn

AECOM
303 EAST WACKER DRIVE, SUITE 1400
CHICAGO, IL 60601-5276
PHONE: (312) 373-7700 FAX: (312) 373-6800

D162A77-SHT-EX-MAINDRAIN-1959-03.dgn	DESIGNED -	REVISED -
USER NAME = ChiuA	DRAWN -	REVISED -
PLOT SCALE = 40.0000 ' / in.	CHECKED -	REVISED -
PLOT DATE = 1/29/2020	DATE - 1/29/2019	REVISED -

STATE OF ILLINOIS
DEPARTMENT OF TRANSPORTATION

EXISTING MAIN DRAIN PLANS

SCALE: | SHEET 3 OF 14 SHEETS | STA. | TO STA.

F.A.I. RTE.	SECTION	COUNTY	TOTAL SHEETS	SHEET NO.
90/94/290	2015-018R	COOK	1360	569

CONTRACT NO. 62A77

ILLINOIS FED. AID PROJECT

FOR INFORMATION ONLY

ROUTE NO.	SECTION	COUNTY	TOTAL SHEETS	SHEET NO.
F.A. I-94	92526.6-1P	COOK	119	104
FED. ROAD DIV. No. 4	ILLINOIS	PROJECT I-94-3(18)-81		

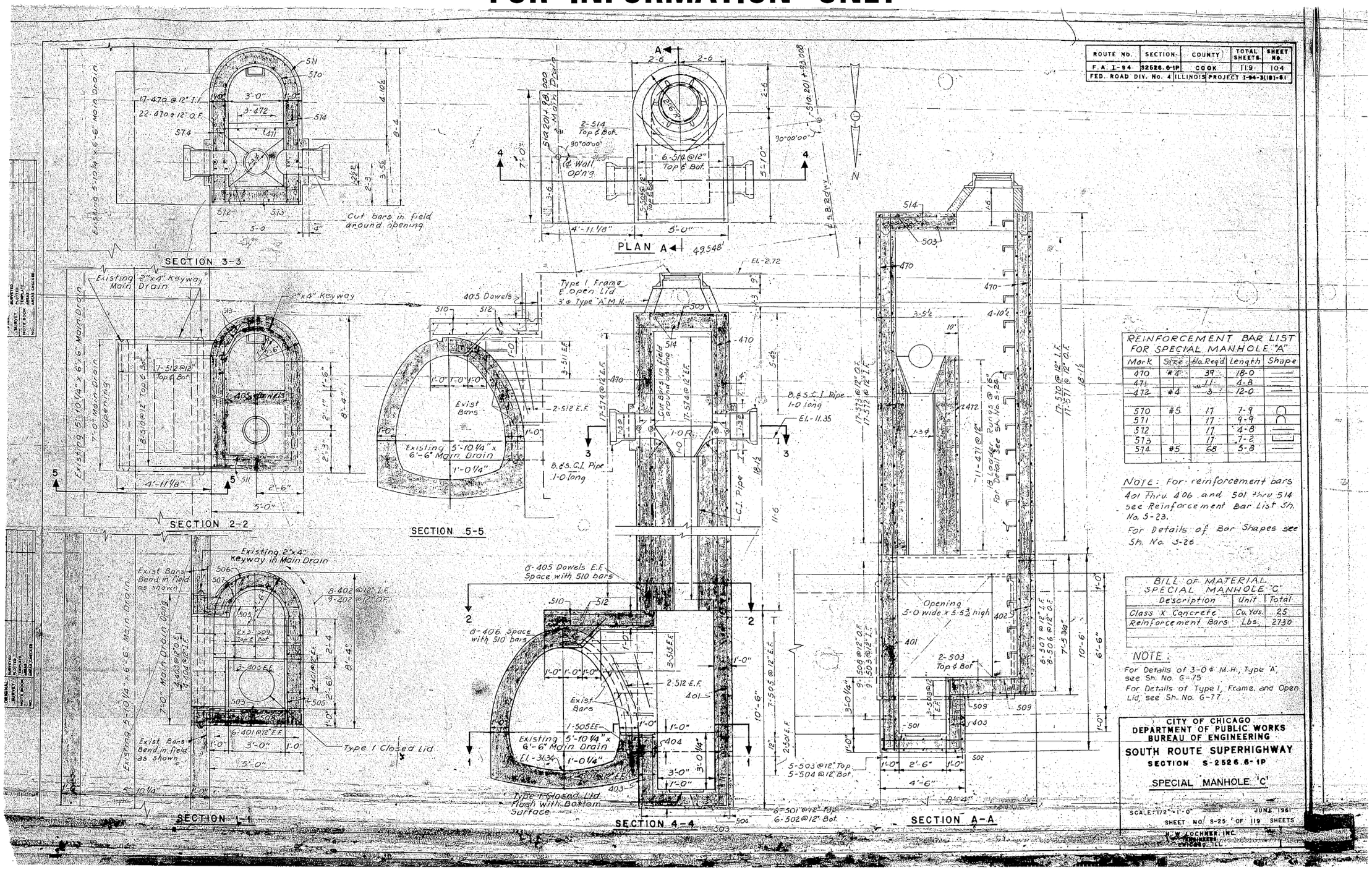

REINFORCEMENT BAR LIST FOR SPECIAL MANHOLE "A"

Mark	Size	No. Req'd	Length	Shape
470	#4	39	18-0	
471		11	4-8	
472	#4	3	12-0	
570	#5	17	7-9	
571		17	9-9	
572		17	4-8	
573		17	7-2	
574	#5	68	5-8	

NOTE: For reinforcement bars 401 thru 406 and 501 thru 514 see Reinforcement Bar List Sh. No. S-23.

For Details of Bar Shapes see Sh. No. S-26

BILL OF MATERIAL SPECIAL MANHOLE "C"

Description	Unit	Total
Class X Concrete	Cu. Yds.	25
Reinforcement Bars	Lbs.	2730

NOTE:

For Details of 3-0 ø M.H., Type 'A', see Sh. No. G-75

For Details of Type 1, Frame, and Open Lid, see Sh. No. G-77

CITY OF CHICAGO
DEPARTMENT OF PUBLIC WORKS
BUREAU OF ENGINEERING

SOUTH ROUTE SUPERHIGHWAY

SECTION S-2526.6-1P

SPECIAL MANHOLE 'C'

SCALE: 1/2" = 1'-0" JUNE 1981

SHEET NO. S-25 OF 119 SHEETS

H.W. LOCHNER, INC. ENGINEERS CHICAGO, ILL.

AECOM
303 EAST WACKER DRIVE, SUITE 1400
CHICAGO, IL 60601-5276
PHONE: (312) 373-7700 FAX: (312) 373-6800

D162A77-SHT-EX-MAINDRAIN-1959-04.dgn	DESIGNED -	REVISED -	
USER NAME = ChiuA	DRAWN -	REVISED -	
PLOT SCALE = 40.0000 ' / in.	CHECKED -	REVISED -	
PLOT DATE = 1/29/2020	DATE - 1/29/2019	REVISED -	

STATE OF ILLINOIS
DEPARTMENT OF TRANSPORTATION

EXISTING MAIN DRAIN PLANS

SCALE: SHEET 4 OF 14 SHEETS STA. TO STA.

F.A.I. RTE.	SECTION	COUNTY	TOTAL SHEETS	SHEET NO.
90/94/290	2015-018R	COOK	1360	570

CONTRACT NO. 62A77

ILLINOIS FED. AID PROJECT

FILE PATH = pw:\\AECOM-NA-AWSi.aecomonline.local:AECOM_DS02_NA\Documents\01 Americas\Transportation\60269938 Circle\Phase_II\000.CAD\006.Roadway\Sheets\62A77-SHT-EX-MAINDRAIN-1959-04.dgn

FOR INFORMATION ONLY

ROUTE NO.	SECTION	COUNTY	TOTAL SHEETS	SHEET No.
F.A. I-94	92526.6-1P	COOK	119	105
FED. ROAD DIV. No. 4	ILLINOIS	PROJECT I-94-3(181)-51		

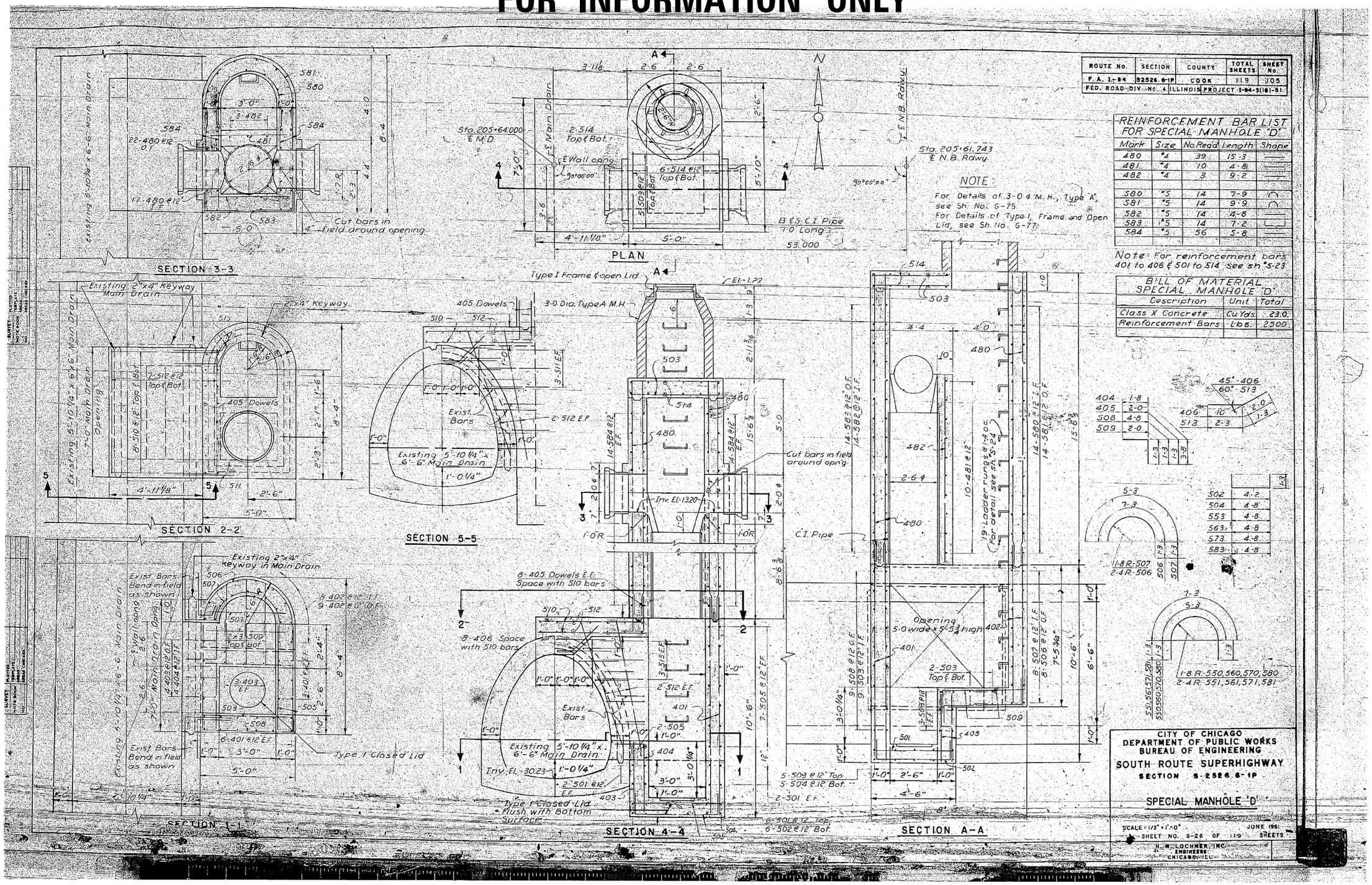

NOTE

For Details of 3-0 ϕ M.H., Type 'A', see Sh. No. G-75.
For Details of Type I, Frame and Open Lid, see Sh. No. G-77.

REINFORCEMENT BAR LIST FOR SPECIAL MANHOLE 'D'

Mark	Size	No. Req'd	Length	Shape
480	#4	39	15-3	
481	#4	10	4-8	
482	#4	3	9-2	
580	#5	14	7-9	
581	#5	14	9-9	
582	#5	14	4-8	
583	#5	14	7-2	
584	#5	56	5-8	

Note: For reinforcement bars 401 to 406 & 501 to 514 see sh. S-23.

BILL OF MATERIAL SPECIAL MANHOLE 'D'

Description	Unit	Total
Class X Concrete	Cu. Yds.	23.0
Reinforcement Bars	Lbs.	2500

404	1-8
405	2-0
508	4-8
509	2-0

45°-406		
60°-513		
406	10	2-0
513	2-3	1-3

502	4-2
504	4-8
553	4-8
563	4-8
573	4-8
583	4-8

CITY OF CHICAGO
DEPARTMENT OF PUBLIC WORKS
BUREAU OF ENGINEERING
SOUTH ROUTE SUPERHIGHWAY
SECTION S-2526.6-1P

SPECIAL MANHOLE 'D'

SCALE: 1/2" = 1'-0" JUNE 1961
SHEET NO. S-26 OF 119 SHEETS
H.W. LOCHNER INC. ENGINEERS CHICAGO, ILL.

FILE PATH = pw:\\AECOM-NA-AWS1.aecomonline.local:AECOM_DS02_NA\Documents\01 Americas\Transportation\60269938 Circle\Phase_II\000_CAD\006_Roadway\Sheets\62A77 Contracts\D162A77-SHT-EX-MAINDRAIN-1959-05.dgn

AECOM
303 EAST WACKER DRIVE, SUITE 1400
CHICAGO, IL 60601-5276
PHONE: (312) 373-7700 FAX: (312) 373-6800

D162A77-SHT-EX-MAINDRAIN-1959-05.dgn	DESIGNED -	REVISED -	
USER NAME = ChiuA	DRAWN -	REVISED -	
PLOT SCALE = 40.0000 ' / in.	CHECKED -	REVISED -	
PLOT DATE = 1/29/2020	DATE - 1/29/2019	REVISED -	

STATE OF ILLINOIS
DEPARTMENT OF TRANSPORTATION

EXISTING MAIN DRAIN PLANS

SCALE: SHEET 5 OF 14 SHEETS STA. TO STA.

F.A.I. RTE.	SECTION	COUNTY	TOTAL SHEETS	SHEET NO.
90/94/290	2015-018R	COOK	1360	571

CONTRACT NO. 62A77

ILLINOIS FED. AID PROJECT

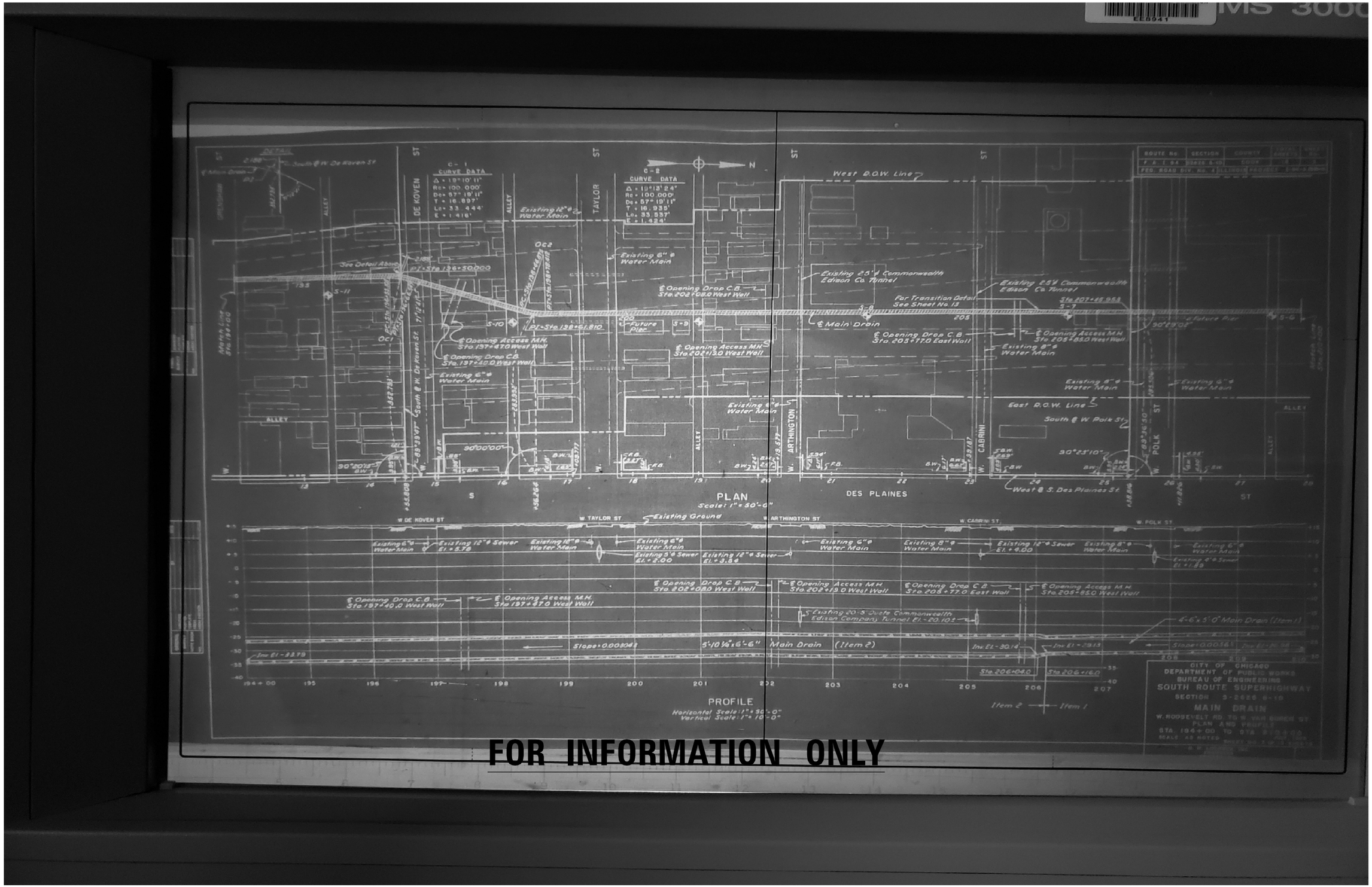

FOR INFORMATION ONLY

FILE PATH = pw:\\AECOM-NA-AWS1.aecomonline.local:AECOM_DS02_NA\Documents\01 Americas\Transportation\60269938 Circle\Phase II\000_CAD\006_Roadway\Sheets\62A77 Contracts\D162A77-SHT-EX-MAINDRAIN-1959-06.dgn

AECOM
303 EAST WACKER DRIVE, SUITE 1400
CHICAGO, IL 60601-5276
PHONE: (312) 373-7700 FAX: (312) 373-6800

D162A77-SHT-EX-MAINDRAIN-1959-06.dgn	DESIGNED -	REVISED -
USER NAME = ChiuA	DRAWN -	REVISED -
PLOT SCALE = 40.0000 ' / in.	CHECKED -	REVISED -
PLOT DATE = 1/29/2020	DATE - 1/29/2019	REVISED -

STATE OF ILLINOIS
DEPARTMENT OF TRANSPORTATION

EXISTING MAIN DRAIN PLANS

SCALE: | SHEET 6 OF 14 SHEETS | STA. TO STA.

F.A.I. RTE.	SECTION	COUNTY	TOTAL SHEETS	SHEET NO.
90/94/290	2015-018R	COOK	1360	572
		CONTRACT NO. 62A77		
		ILLINOIS FED. AID PROJECT		

FOR INFORMATION ONLY

FILE PATH = pw:\\AECOM-NA-AWS1.aecomonline.local:AECOM.DS02.NA\Documents\01 Americas\Transportation\60269938 Circle\Phase II\000 CAD\006 Roadway\Sheets\62A77 Contracts\D162A77-SHT-EX-MAINDRAIN-1959-07.dgn

AECOM
303 EAST WACKER DRIVE, SUITE 1400
CHICAGO, IL 60601-5276
PHONE: (312) 373-7700 FAX: (312) 373-6800

D162A77-SHT-EX-MAINDRAIN-1959-07.dgn	DESIGNED -	REVISED -
USER NAME = ChuA	DRAWN -	REVISED -
PLOT SCALE = 40.0000 ' / in.	CHECKED -	REVISED -
PLOT DATE = 1/29/2020	DATE - 1/29/2019	REVISED -

STATE OF ILLINOIS
DEPARTMENT OF TRANSPORTATION

EXISTING MAIN DRAIN PLANS

SCALE: | SHEET 7 OF 14 SHEETS | STA. | TO STA.

F.A.I. RTE.	SECTION	COUNTY	TOTAL SHEETS	SHEET NO.
90/94/290	2015-018R	COOK	1360	573

CONTRACT NO. 62A77

ILLINOIS FED. AID PROJECT

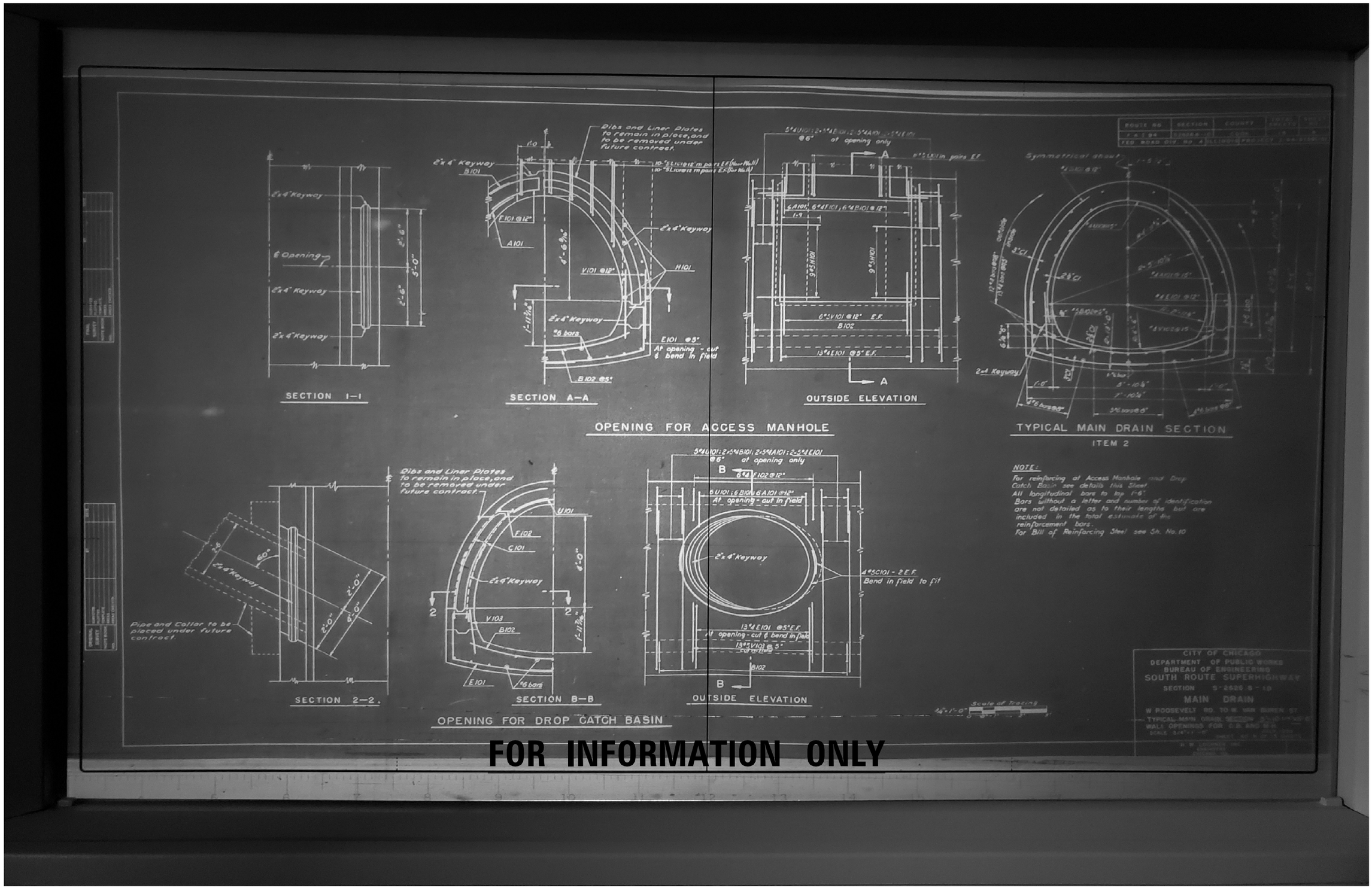

FILE PATH = pw:\\AECOM-NA-AWS1.aecomonline.local:AECOM_DS02_NA\Documents\01 Americas\Transportation\60269938 Circle\Phase II\000.CAD\006.Roadway\Sheets\62A77 Contracts\D162A77-SHT-EX-MAINDRAIN-1959-08.dgn

AECOM
303 EAST WACKER DRIVE, SUITE 1400
CHICAGO, IL 60601-5276
PHONE: (312) 373-7700 FAX: (312) 373-6800

D162A77-SHT-EX-MAINDRAIN-1959-08.dgn	DESIGNED -	REVISED -
USER NAME = ChiuA	DRAWN -	REVISED -
PLOT SCALE = 40.0000 ' / in.	CHECKED -	REVISED -
PLOT DATE = 1/29/2020	DATE - 1/29/2019	REVISED -

STATE OF ILLINOIS
DEPARTMENT OF TRANSPORTATION

EXISTING MAIN DRAIN PLANS

SCALE: | SHEET 8 OF 14 SHEETS | STA. TO STA.

F.A.I. RTE.	SECTION	COUNTY	TOTAL SHEETS	SHEET NO.
90/94/290	2015-018R	COOK	1360	574

CONTRACT NO. 62A77

ILLINOIS FED. AID PROJECT

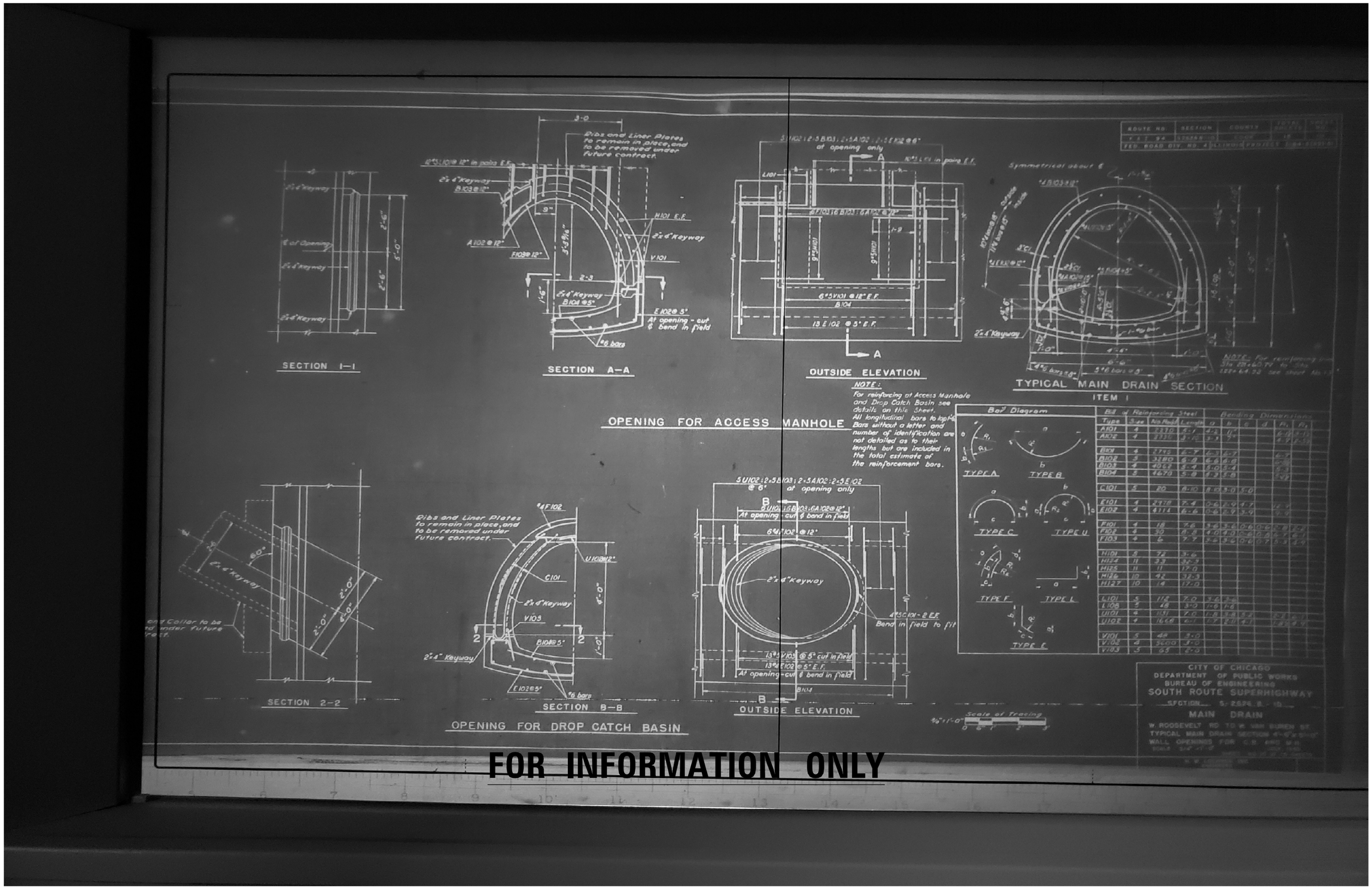

FILE PATH = pw:\\AECOM-NA-AWS1.aecomonline.local:AECOM.DS02.NA\Documents\01 Americas\Transportation\60269938 Circle\Phase II\000 CAD\006 Roadway\Sheets\62A77 Contracts\D162A77-SHT-EX-MAINDRAIN-1959-09.dgn

AECOM
303 EAST WACKER DRIVE, SUITE 1400
CHICAGO, IL 60601-5276
PHONE: (312) 373-7700 FAX: (312) 373-6800

D162A77-SHT-EX-MAINDRAIN-1959-09.dgn	DESIGNED -	REVISED -
USER NAME = ChuA	DRAWN -	REVISED -
PLOT SCALE = 40.0000 ' / in.	CHECKED -	REVISED -
PLOT DATE = 1/29/2020	DATE - 1/29/2019	REVISED -

STATE OF ILLINOIS
DEPARTMENT OF TRANSPORTATION

EXISTING MAIN DRAIN PLANS

SCALE: | SHEET 9 OF 14 SHEETS | STA. | TO STA.

F.A.I. RTE.	SECTION	COUNTY	TOTAL SHEETS	SHEET NO.
90/94/290	2015-018R	COOK	1360	575

CONTRACT NO. 62A77

ILLINOIS FED. AID PROJECT

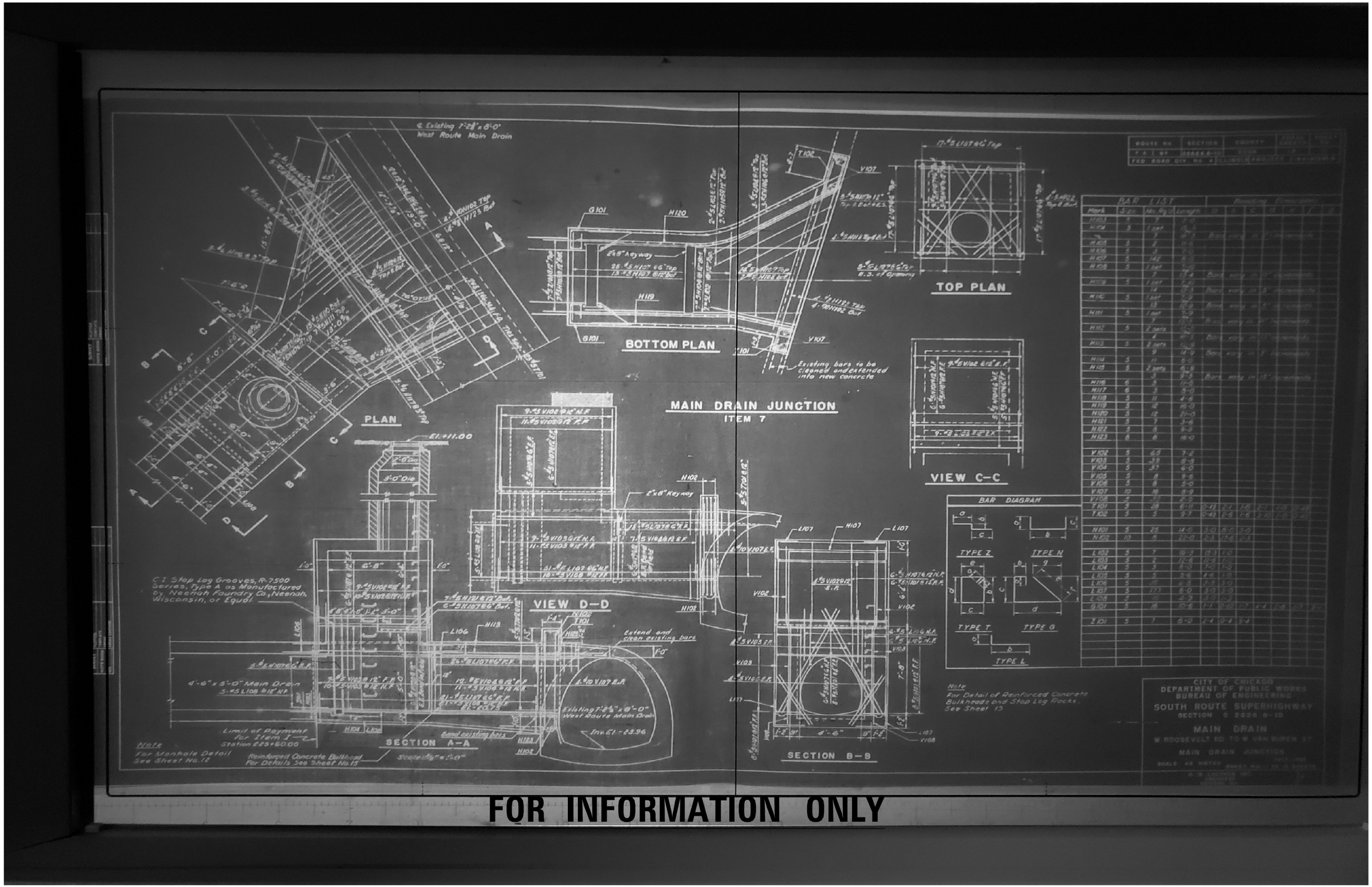

FOR INFORMATION ONLY

FILE PATH = pw:\\AECOM-NA-ANSI.aecomonline.local:AECOM_DS02_NA\Documents\01 Americas\Transportation\60269938 Circle\Phase II\000.CAD\006.Roadway\Sheets\62A77 Contracts\D162A77-SHT-EX-MAINDRAIN-1959-10.dgn

AECOM
303 EAST WACKER DRIVE, SUITE 1400
CHICAGO, IL 60601-5276
PHONE: (312) 373-7700 FAX: (312) 373-6800

D162A77-SHT-EX-MAINDRAIN-1959-10.dgn	DESIGNED -	REVISED -	
USER NAME = ChiuA	DRAWN -	REVISED -	
PLOT SCALE = 40.0000 ' / in.	CHECKED -	REVISED -	
PLOT DATE = 1/29/2020	DATE - 1/29/2019	REVISED -	

STATE OF ILLINOIS
DEPARTMENT OF TRANSPORTATION

EXISTING MAIN DRAIN PLANS

SCALE: | SHEET 10 OF 14 SHEETS | STA. | TO STA.

F.A.I. RTE.	SECTION	COUNTY	TOTAL SHEETS	SHEET NO.
90/94/290	2015-018R	COOK	1360	576

CONTRACT NO. 62A77

ILLINOIS FED. AID PROJECT

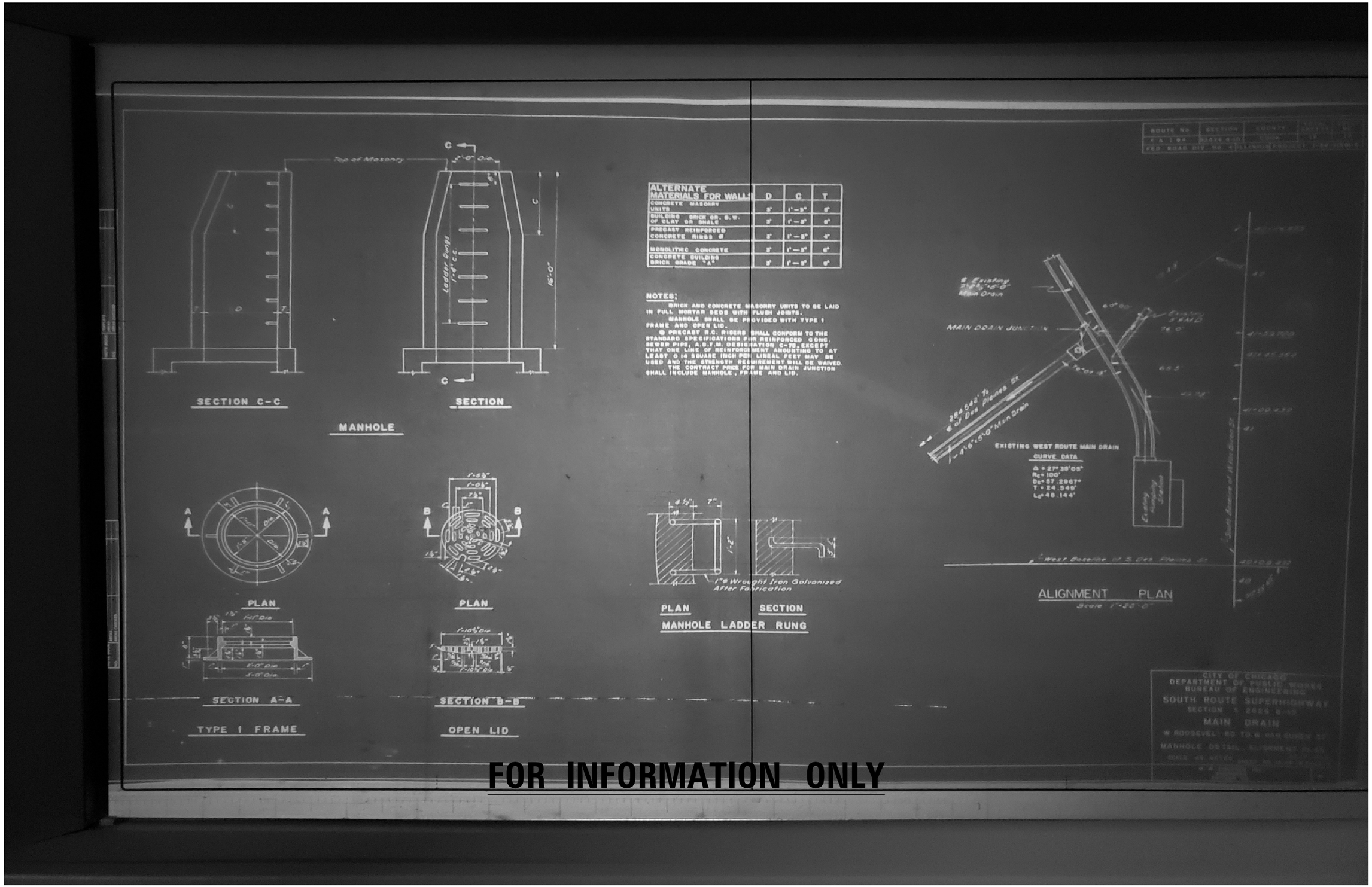

FOR INFORMATION ONLY

FILE PATH = pw:\\AECOM-NA-AWS1.aecomonline.local:AECOM_DS02_NA\Documents\01 Americas\Transportation\60269938 Circle\Phase_II\000_CAD\006_Roadway\Sheets\62A77 Contract\D162A77-SHT-EX-MAINDRAIN-1959-11.dgn

AECOM 303 EAST WACKER DRIVE, SUITE 1400 CHICAGO, IL 60601-5276 PHONE: (312) 373-7700 FAX: (312) 373-6800	D162A77-SHT-EX-MAINDRAIN-1959-11.dgn	DESIGNED -	REVISED -	STATE OF ILLINOIS DEPARTMENT OF TRANSPORTATION	EXISTING MAIN DRAIN PLANS	F.A.I. RTE.	SECTION	COUNTY	TOTAL SHEETS / SHEET NO.
	USER NAME = ChiuA	DRAWN -	REVISED -			90/94/290	2015-018R	COOK	1360 / 577
	PLOT SCALE = 40.0000 ' / in.	CHECKED -	REVISED -					CONTRACT NO. 62A77	
	PLOT DATE = 1/29/2020	DATE - 1/29/2019	REVISED -		SCALE: SHEET 11 OF 14 SHEETS STA. TO STA.		ILLINOIS FED. AID PROJECT		

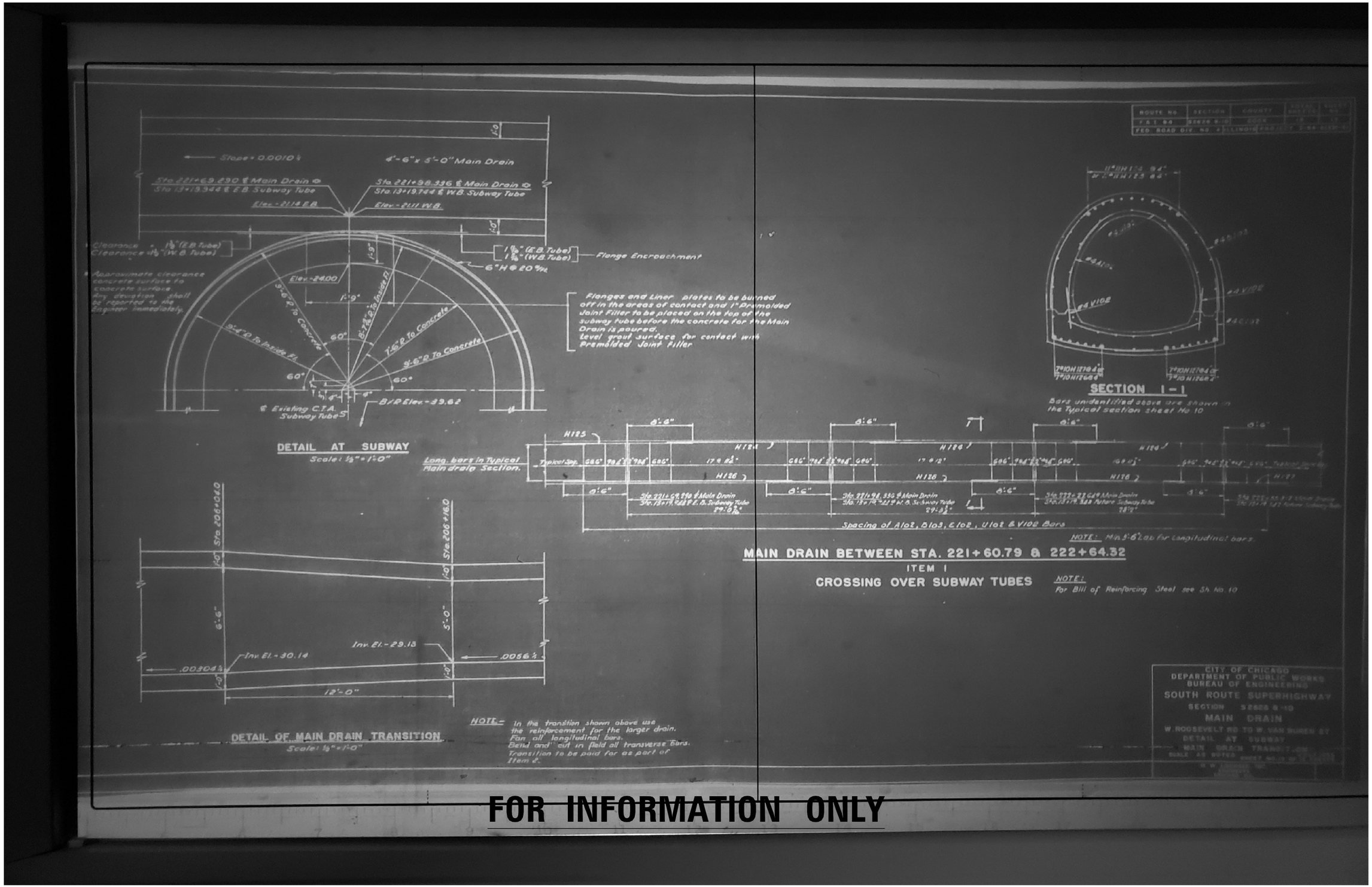

FOR INFORMATION ONLY

FILE PATH = pw:\\AECOM-NA-AWS1.aecomonline.local:AECOM_DS02_NA\Documents\01 Americas\Transportation\60269938 Circle\Phase_II\000_CAD\006_Roadway\Sheets\62A77 Contract\D162A77-SHT-EX-MAINDRAIN-1959-12.dgn

AECOM 303 EAST WACKER DRIVE, SUITE 1400 CHICAGO, IL 60601-5276 PHONE: (312) 373-7700 FAX: (312) 373-6800	D162A77-SHT-EX-MAINDRAIN-1959-12.dgn	DESIGNED -	REVISED -	STATE OF ILLINOIS DEPARTMENT OF TRANSPORTATION	EXISTING MAIN DRAIN PLANS	F.A.I. RTE.	SECTION	COUNTY	TOTAL SHEETS / SHEET NO.
	USER NAME = ChiuA	DRAWN -	REVISED -			90/94/290	2015-018R	COOK	1360 / 578
	PLOT SCALE = 40.0000 ' / in.	CHECKED -	REVISED -					CONTRACT NO. 62A77	
	PLOT DATE = 1/29/2020	DATE - 1/29/2019	REVISED -		SCALE: SHEET 12 OF 14 SHEETS STA. TO STA.		ILLINOIS	FED. AID PROJECT	

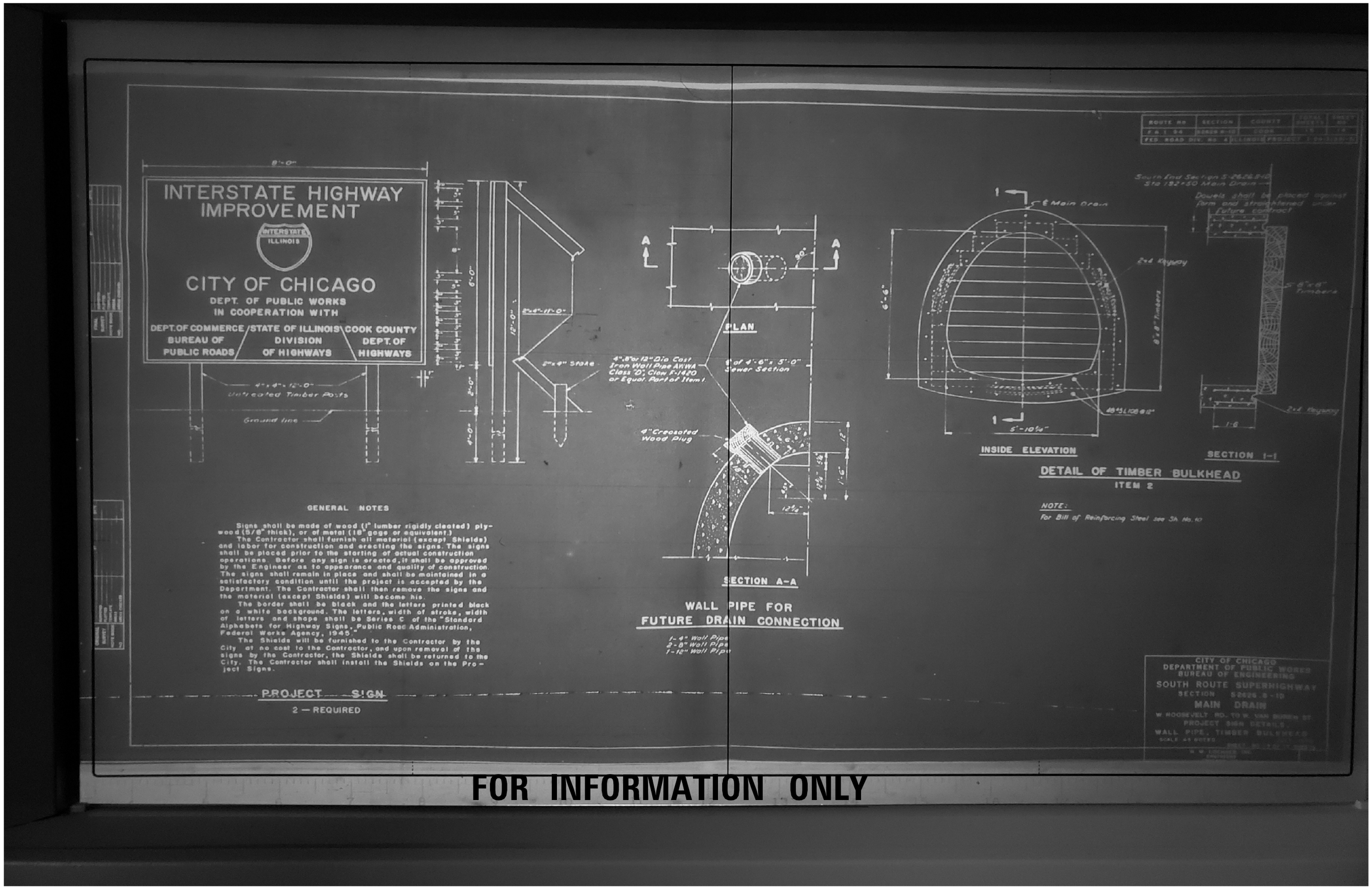

FOR INFORMATION ONLY

FILE PATH = pw:\\AECOM-NA-AWS1.aecomonline.local:AECOM_DS02_NA\Documents\01 Americas\Transportation\60269938 Circle\Phase.II\000.CAD\006.Roadway\Sheets\62A77 Contracts\D162A77-SHT-EX-MAINDRAIN-1959-13.dgn

AECOM
303 EAST WACKER DRIVE, SUITE 1400
CHICAGO, IL 60601-5276
PHONE: (312) 373-7700 FAX: (312) 373-6800

D162A77-SHT-EX-MAINDRAIN-1959-13.dgn	DESIGNED -	REVISED -
USER NAME = ChiuA	DRAWN -	REVISED -
PLOT SCALE = 40.0000 ' / in.	CHECKED -	REVISED -
PLOT DATE = 1/29/2020	DATE - 1/29/2019	REVISED -

STATE OF ILLINOIS
DEPARTMENT OF TRANSPORTATION

EXISTING MAIN DRAIN PLANS

SCALE: | SHEET 13 OF 14 SHEETS | STA. TO STA.

F.A.I. RTE.	SECTION	COUNTY	TOTAL SHEETS	SHEET NO.
90/94/290	2015-018R	COOK	1360	579

CONTRACT NO. 62A77

ILLINOIS FED. AID PROJECT

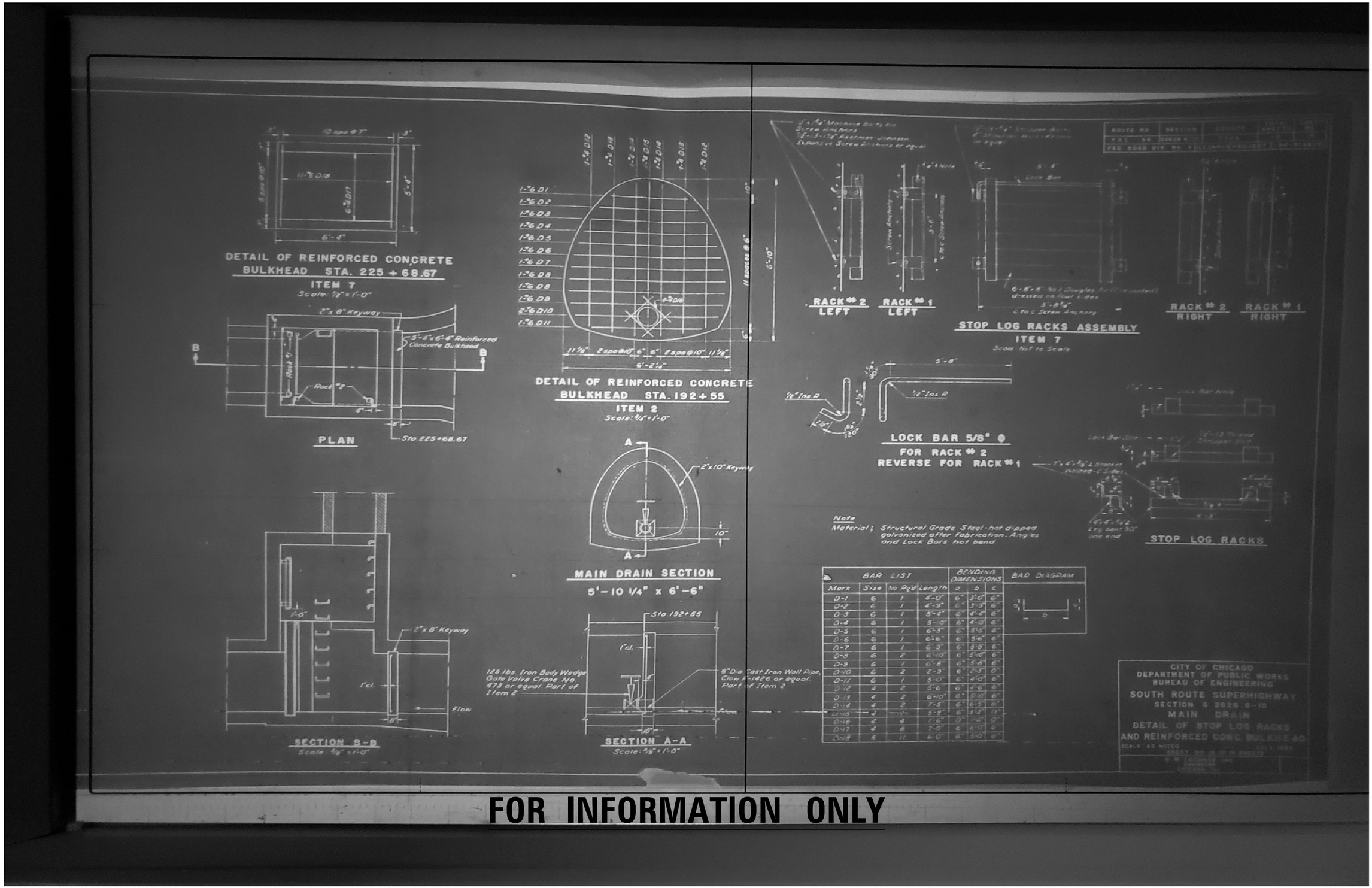

BAR LIST				BENDING DIMENSIONS		
Mark	Size	No Req'd	Length	a	b	c
D-1	6	1	4'-0"	6"	3'-0"	6"
D-2	6	1	4'-9"	6"	3'-9"	6"
D-3	6	1	5'-4"	6"	4'-4"	6"
D-4	6	1	5'-10"	6"	4'-10"	6"
D-5	6	1	6'-3"	6"	5'-3"	6"
D-6	6	1	6'-6"	6"	5'-6"	6"
D-7	6	1	6'-9"	6"	5'-9"	6"
D-8	6	2	6'-10"	6"	5'-10"	6"
D-9	6	1	6'-8"	6"	5'-8"	6"
D-10	6	2	2'-9"	6"	2'-3"	0"
D-11	6	1	5'-0"	6"	4'-0"	6"
D-12	4	2	5'-6"	6"	4'-6"	6"
D-13	4	2	6'-10"	6"	5'-10"	6"
D-14	4	2	7'-5"	6"	6'-5"	6"
D-15	4	1	5'-8"	6"	5'-2"	0"
D-16	4	4	7'-6"	0"	1'-6"	0"
D-17	4	6	7'-0"	6"	6'-0"	6"
D-18	5	11	6'-0"	6"	5'-0"	6"

FILE PATH = pw:\\AECOM-NA-AWS1.aecomonline.local:AECOM_DS02_NA\Documents\01 Americas\Transportation\60269938 Circle\Phase_II\000_CAD\006_Roadway\Sheets\62A77 Contract\D162A77-SHT-EX-MAINDRAIN-1959-14.dgn

AECOM
303 EAST WACKER DRIVE, SUITE 1400
CHICAGO, IL 60601-5276
PHONE: (312) 373-7700 FAX: (312) 373-6800

D162A77-SHT-EX-MAINDRAIN-1959-14.dgn	DESIGNED -	REVISED -	
USER NAME = ChiuA	DRAWN -	REVISED -	
PLOT SCALE = 40.0000 ' / in.	CHECKED -	REVISED -	
PLOT DATE = 1/29/2020	DATE - 1/29/2019	REVISED -	

STATE OF ILLINOIS
DEPARTMENT OF TRANSPORTATION

EXISTING MAIN DRAIN PLANS

SCALE: | SHEET 14 OF 14 SHEETS | STA. | TO STA.

F.A.I. RTE.	SECTION	COUNTY	TOTAL SHEETS	SHEET NO.
90/94/290	2015-018R	COOK	1360	580

CONTRACT NO. 62A77

ILLINOIS FED. AID PROJECT

FOR INFORMATION ONLY

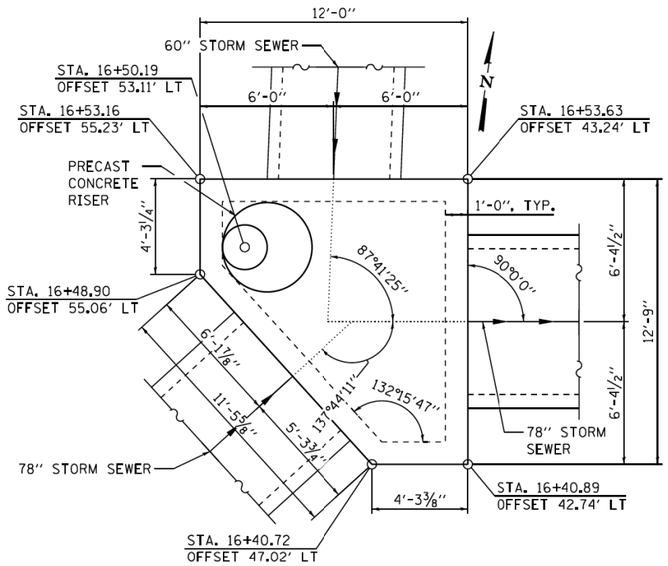

PLAN

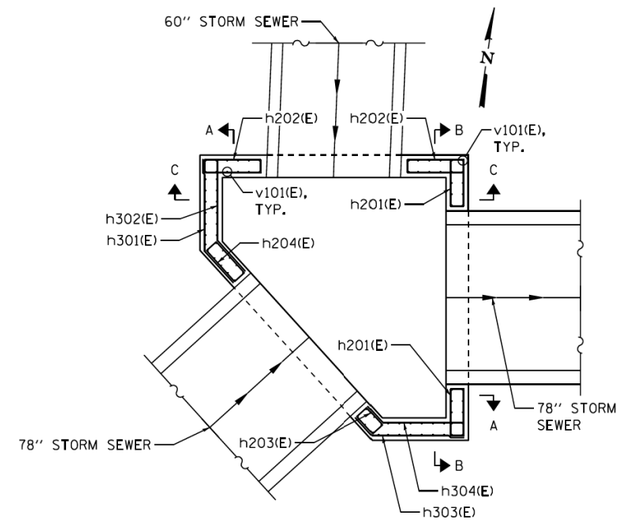

SECTIONAL WALL PLAN

(AT MID-HEIGHT OF WALL)

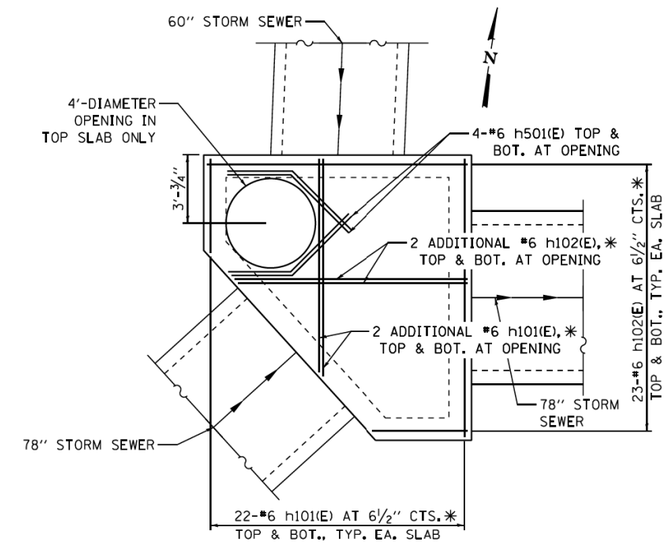

SLAB PLAN

(TOP SLAB SHOWN,
BOT. SLAB SIMILAR)

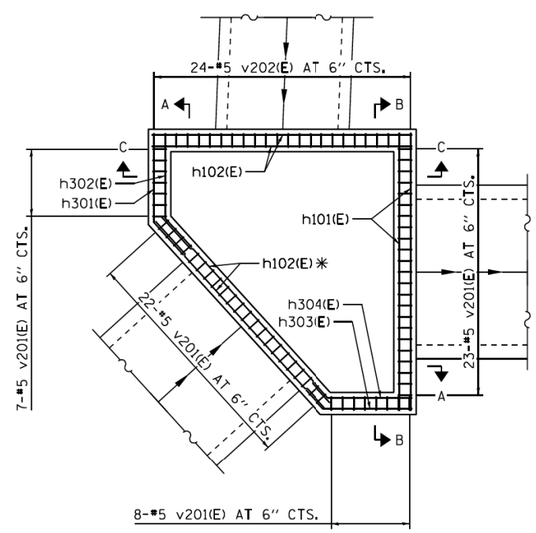

SECTIONAL WALL PLAN

(ABOVE STORM SEWERS)

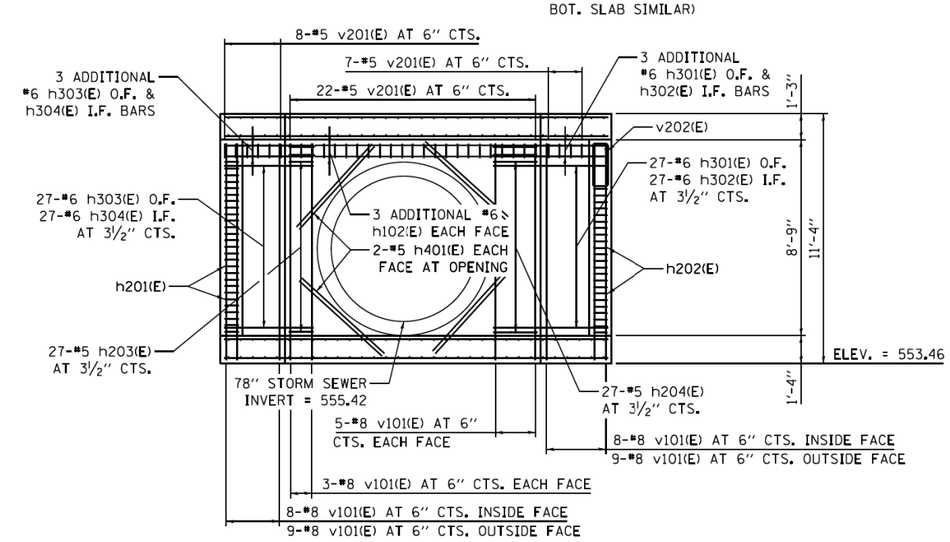

SECTION A-A

NOTES:

1. STATIONS AND OFFSETS ARE TAKEN ALONG EX ℄ SB I-90/94.
2. ✳ = CUT TO FIT.
3. CLEAR COVER IS 2" ON ALL FACES EXCEPT THE BOTTOM OF THE BOTTOM SLAB. AN ADDITIONAL 1" FOR A TOTAL OF 3" CLEAR COVER IS PROVIDED FOR CASTING AGAINST EARTH.

FILE PATH = pw:\\AECOM-NA-AWS1.aecomonline.local:AECOM_DS02_NA\Documents\01 Americas\Transportation\60269938 Circle\Phase II\000.CAD\006-Roadway\Sheets\60X79_Contracts\D160X79-sht-Drain-Detail-05A.dgn

D160X79-sht-Drain-Detail-05A.dgn	DESIGNED - BMJ	REVISED - 8 11/20/2019	STATE OF ILLINOIS DEPARTMENT OF TRANSPORTATION
USER NAME = bmjanus	DRAWN - BMJ	REVISED -	
PLOT SCALE = 6.0000 ' / in.	CHECKED - AMD	REVISED -	
PLOT DATE = 11/20/2019	DATE - 9-10-2018	REVISED -	

TranSystems

DRAINAGE DETAILS
JUNCTION CHAMBER NO. 3

SCALE: NONE | SHEET 5A OF 6 SHEETS | STA. TO STA.

F.A.I. RTE.	SECTION	COUNTY	TOTAL SHEETS	SHEET NO.
90/94/290	2014-005R&B	COOK	888	295A
		CONTRACT NO. 60X79		
		ILLINOIS FED. AID PROJECT		

FILE PATH = pw:\\AECOM-NA-AWS1.aecomonline.local:AECOM_DS02_NA\Documents\01 Americas\Transportation\60269938 Circle\Phase II\000.CAD\006-Roadway\Sheets\62A77 Contracts\D162A77-SHT-EX-JC-60X79-01.dgn

AECOM
303 EAST WACKER DRIVE, SUITE 1400
CHICAGO, IL 60601-5276
PHONE: (312) 373-7700 FAX: (312) 373-6800

D162A77-SHT-EX-JC-60X79-01.dgn	DESIGNED -	REVISED -	STATE OF ILLINOIS DEPARTMENT OF TRANSPORTATION
USER NAME = ChiuA	DRAWN -	REVISED -	
PLOT SCALE = 40.0000 ' / in.	CHECKED -	REVISED -	
PLOT DATE = 1/29/2020	DATE - 1/29/2019	REVISED -	

EXISTING JUNCTION CHAMBER PLANS

SCALE: | SHEET 1 OF 2 SHEETS | STA. TO STA.

F.A.I. RTE.	SECTION	COUNTY	TOTAL SHEETS	SHEET NO.
90/94/290	2015-018R	COOK	1360	580A
		CONTRACT NO. 62A77		
		ILLINOIS FED. AID PROJECT		

FOR INFORMATION ONLY

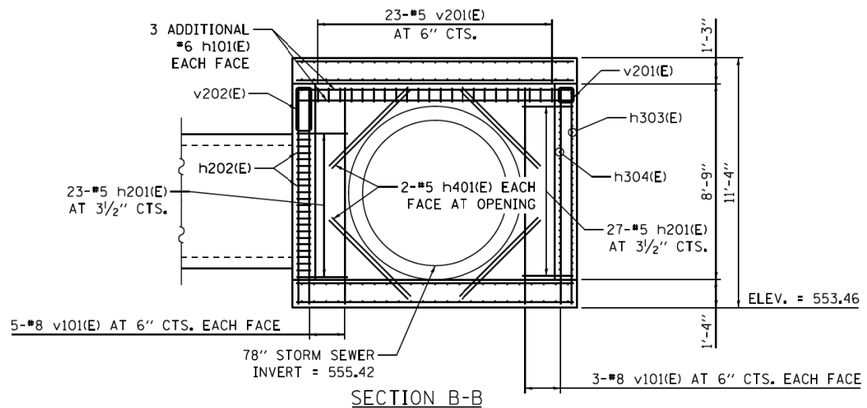

SECTION B-B

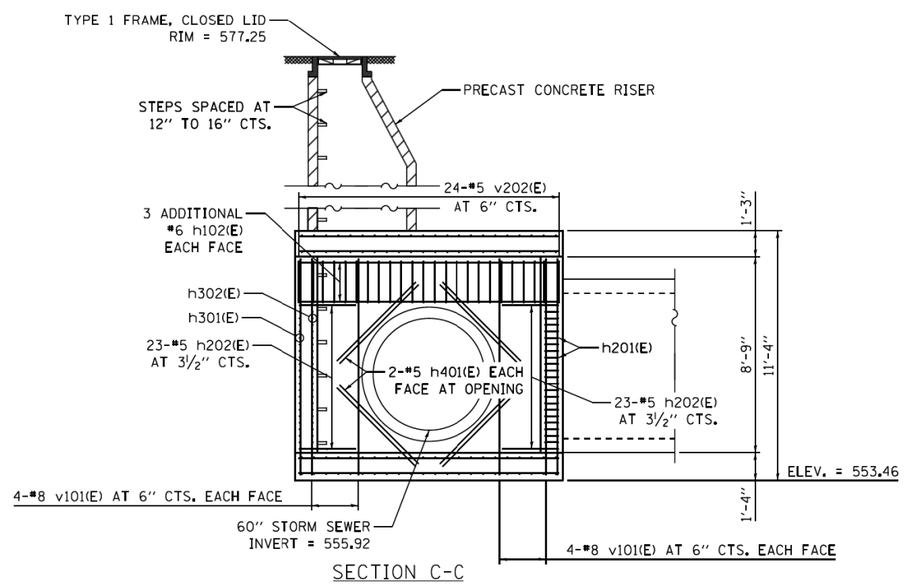

SECTION C-C

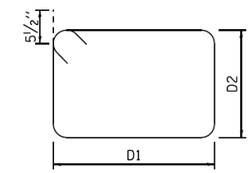

TIE BARS

BAR	SIZE	D1	D2	LENGTH
h201(E)	#5	2'-2"	8"	6'-7"
h202(E)	#5	2'-8"	8"	7'-7"
h203(E)	#5	1'-1"	8"	4'-5"
h204(E)	#5	1'-11"	8"	6'-1"
v201(E)	#5	8"	8"	3'-7"
v202(E)	#5	1'-11"	8"	6'-1"

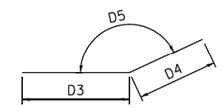

BENT BARS

BAR	SIZE	D3	D4	D5	LENGTH
h301(E)	#6	4'-1"	1'-11"	138°	6'-0"
h302(E)	#6	3'-8"	1'-10"	138°	5'-6"
h303(E)	#6	1'-1"	4'-1"	132°	5'-2"
h304(E)	#6	1'-0"	3'-8"	132°	4'-8"
h501(E)	#6	2'-10"	3'-8"	135°	6'-6"

8

JUNCTION CHAMBER NO. 3
BILL OF MATERIAL

BAR	NO.	SIZE	LENGTH	SHAPE
h101(E)	98	#6	12'-5"	
h102(E)	108	#6	11'-8"	
h201(E)	50	#5	6'-7"	
h202(E)	46	#5	7'-7"	
h203(E)	27	#5	4'-5"	
h204(E)	27	#5	6'-1"	
h301(E)	30	#6	6'-0"	
h302(E)	30	#6	5'-6"	
h303(E)	30	#6	5'-2"	
h304(E)	30	#6	4'-8"	
h401(E)	48	#5	5'-0"	
h501(E)	8	#6	6'-6"	
v101(E)	82	#8	9'-8"	
v201(E)	60	#5	3'-7"	
v202(E)	24	#5	6'-1"	
CONCRETE STRUCTURES			CU YD	19.7
REINFORCEMENT BARS, EPOXY COATED			POUND	8,510
TYPE 1 FRAME, CLOSED LID			EACH	1
PRECAST CONCRETE RISER			EACH	1

NOTE: COST OF STEPS INCLUDED IN COST OF CONCRETE STRUCTURES.

NOTES:

1. A PRECAST REINFORCED CONCRETE ALTERNATE SHALL BE ALLOWED FOR THIS STRUCTURE. SHOP PLANS AND CALCULATIONS SHALL BE SUBMITTED BY THE CONTRACTOR TO THE ENGINEER ACCORDING TO THE APPLICABLE REQUIREMENTS OF ARTICLE 504 OF THE STANDARD SPECIFICATIONS.
2. ALL INVERTS AND ELEVATIONS SHALL BE FIELD VERIFIED BY THE CONTRACTOR PRIOR TO ORDERING MATERIALS AND CONSTRUCTION.
3. STATION, OFFSET AND RIM ELEVATION PROVIDED ARE AT THE CENTER OF THE PROPOSED FRAME AND LID.
4. CLEAR COVER IS 2" ON ALL FACES EXCEPT THE BOTTOM OF THE BOTTOM SLAB. AN ADDITIONAL 1" FOR A TOTAL OF 3" CLEAR COVER IS PROVIDED FOR CASTING AGAINST EARTH.

FILE PATH = pw:\\AECOM-NA-AWSi.secomonline.local:AECOM_DS02_NA\Documents\01 Americas\Transportation\60269938 Circle\Phase_II\000_CAD\006_Roadway\Sheets\60X79_Contract\D160X79-sht-Drain-Detail-058.dgn

D160X79-sht-Drain-Detail-058.dgn	DESIGNED - BMJ	REVISED - 8 11/20/2019	
USER NAME = bmjanus	DRAWN - BMJ	REVISED -	
PLOT SCALE = 5.0000 ' / in.	CHECKED - AMD	REVISED -	
PLOT DATE = 11/20/2019	DATE - 9-10-2018	REVISED -	

Tran Systems

STATE OF ILLINOIS
DEPARTMENT OF TRANSPORTATION

DRAINAGE DETAILS
JUNCTION CHAMBER NO. 3

SCALE: NONE | SHEET 5B OF 6 SHEETS | STA. TO STA.

F.A.I. RTE.	SECTION	COUNTY	TOTAL SHEETS	SHEET NO.
90/94/290	2014-005R&B	COOK	888	295B
		CONTRACT NO. 60X79		
	ILLINOIS	FED. AID PROJECT		

FILE PATH = pw:\\AECOM-NA-AWSi.secomonline.local:AECOM_DS02_NA\Documents\01 Americas\Transportation\60269938 Circle\Phase_II\000_CAD\006_Roadway\Sheets\62A77 Contracts\D162A77-SHT-EX-JC-60X79-02.dgn

AECOM
303 EAST WACKER DRIVE, SUITE 1400
CHICAGO, IL 60601-5276
PHONE: (312) 373-7700 FAX: (312) 373-6800

D162A77-SHT-EX-JC-60X79-02.dgn	DESIGNED -	REVISED -
USER NAME = ChiuA	DRAWN -	REVISED -
PLOT SCALE = 40.0000 ' / in.	CHECKED -	REVISED -
PLOT DATE = 1/29/2020	DATE - 1/29/2019	REVISED -

STATE OF ILLINOIS
DEPARTMENT OF TRANSPORTATION

EXISTING JUNCTION CHAMBER PLANS

SCALE: | SHEET 2 OF 2 SHEETS | STA. TO STA.

F.A.I. RTE.	SECTION	COUNTY	TOTAL SHEETS	SHEET NO.
90/94/290	2015-018R	COOK	1360	580B
		CONTRACT NO. 62A77		
	ILLINOIS	FED. AID PROJECT		

FOR INFORMATION ONLY

39-2

S.W. ¼ Sec. 16. 39. 14.

22

FOR STREET GRADES SEE GRADE ATLAS

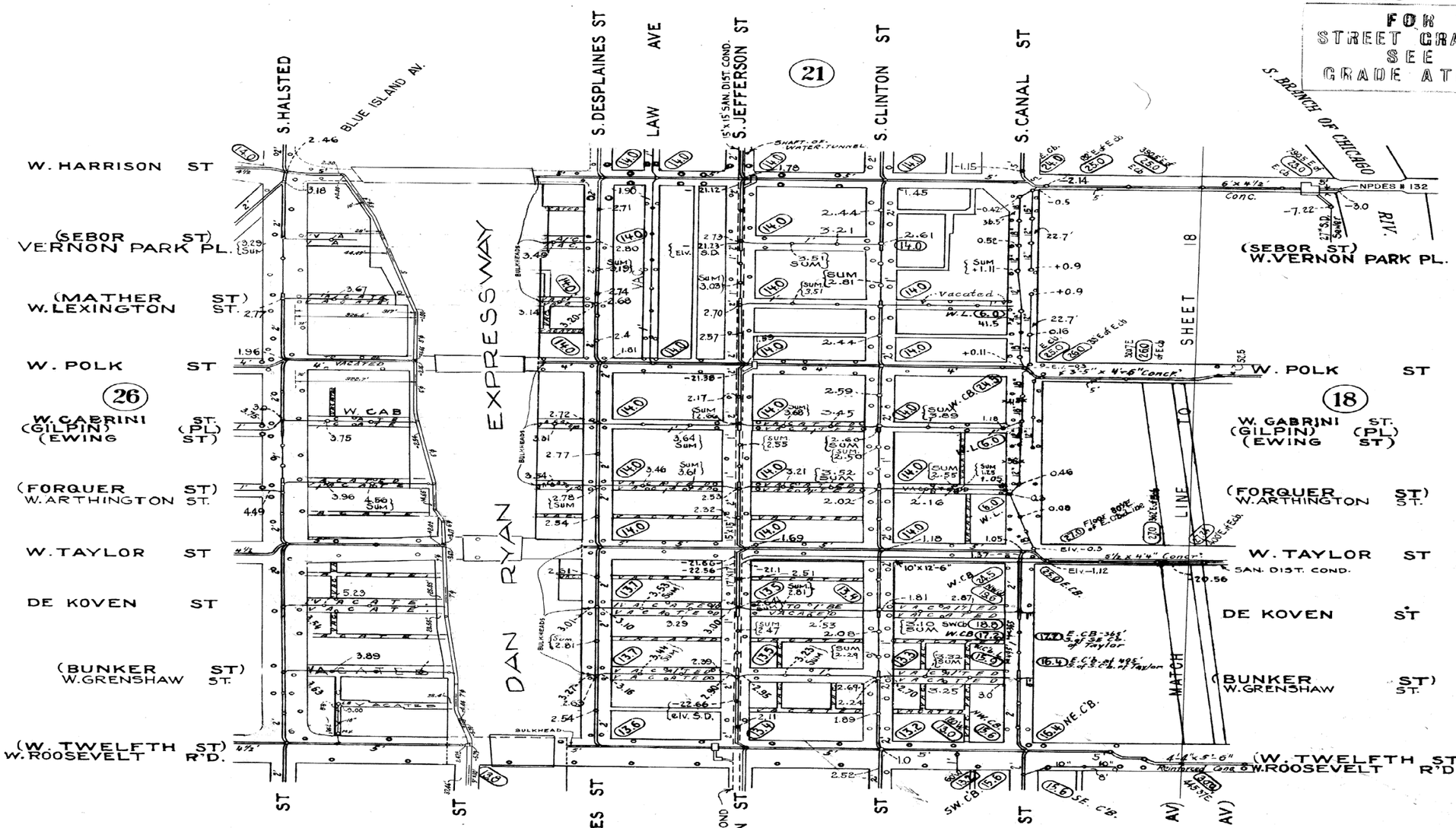

FOR STREET GRADES SEE GRADE ATLAS

FOR STREET GRADES SEE GRADE ATLAS

39-2

FILE PATH = pw:\\AECOM-NA-AWS1.aecomonline.local:AECOM_DS02_NA\Documents\01 Americas\Transportation\60269938 Circle\Phase_II\000_CAD\006_Roadway\Sheets\62A77 Contracts\D162A77-SHT-EX-CDWM-ATLAS-01.dgn

AECOM
303 EAST WACKER DRIVE, SUITE 1400
CHICAGO, IL 60601-5276
PHONE: (312) 373-7700 FAX: (312) 373-6800

D162A77-SHT-EX-CDWM-ATLAS-01.dgn	DESIGNED -	REVISED -
USER NAME = chiua	DRAWN -	REVISED -
PLOT SCALE = 40.0000 ' / in.	CHECKED -	REVISED -
PLOT DATE = 1/31/2020	DATE - 1/29/2019	REVISED -

STATE OF ILLINOIS
DEPARTMENT OF TRANSPORTATION

EXISTING CDWM SEWER ATLAS

SCALE: | SHEET 1 OF 1 SHEETS | STA. TO STA.

F.A.I. RTE.	SECTION	COUNTY	TOTAL SHEETS	SHEET NO.
90/94/290	2015-018R	COOK	1360	580C

CONTRACT NO. 62A77

ILLINOIS FED. AID PROJECT

FOR INFORMATION ONLY

CONSTRUCTION SEQUENCING NOTES:

1. DRAWINGS ARE BASED ON RECORD DRAWINGS RECEIVED FROM CHICAGO DEPARTMENT OF WATER MANAGEMENT (CDWM). IN ADVANCE OF PERFORMING THE WORK, THE CONTRACTOR SHALL EXCAVATE AND VERIFY IN THE FIELD, THE LOCATION, SIZE, JOINT TYPE OF THE EXISTING 54" PIPE AND FITTINGS TO BE REMOVED WHERE THE PROPOSED CONNECTIONS ARE TO BE MADE. CONTACT CHICAGO DEPARTMENT OF WATER MANAGEMENT (CDWM) FOR SHUTDOWN OF WATER MAINS (312-744-5070). DEWATER EXISTING 54" WATER MAIN.
2. REMOVE EXISTING 54" WATER MAIN, SEE SHEET 107.
3. INSTALL CARBON FIBER LINING IN EXISTING 54" WATER MAIN BETWEEN STATION 900+51.09 AND STATION 901+84.09.
4. INSTALL 70' - 72" STEEL CASING PIPE BETWEEN STATIONS 902+14.43 AND 902+84.73 UNDER LOCATIONS OF EXISTING 60" COMBINED SEWER, PROPOSED RETAINING WALL AND PROPOSED 60" COMBINED SEWER.
5. INSTALL 48" WATER MAIN IN CASING PIPE USING CASING SPACERS.
6. INSTALL 1-48" X 24" TEE FOR INSPECTION MANHOLE AT APPROXIMATE STATION 902+07.73. TEMPORARILY PLUG AND BRACE EAST RUN OF TEE FOR PRESSURE TESTING. INSTALL TEMPORARY FLUSHING HYDRANT ON BRANCH OUTLET OF TEE.
7. INSTALL 2- 48" X 1/4 VERTICAL BENDS AT APPROXIMATE STATION 902+95.09 TO ADJUST THE VERTICAL ALIGNMENT OF PIPELINE. BUILD PIPE SUPPORT, TYPE 3.
8. INSTALL 48" PIPE TO THE WEST AS SHOWN.
9. INSTALL 1-48" BUTTERFLY VALVE AT STATION 903+22.41 AND 48" PIPE TO WEST. INSTALL 2-2" TAPS AND BUILD BASINS PER THE DETAILS.
10. INSTALL 1-54"X 48" STEEL TRANSITION REDUCER. WELD THE 54" JOINT. INSTALL 48" PIPE WITH THRUST COLLAR AND BUILD THRUST RESTRAINTS (SEE SECTION A-A). INSTALL 48" PIPE TO EAST AND CONNECT WITH 1-48" MJ SLEEVE.
11. CONTACT CDWM TO OPEN THE VALVES TO THE WEST THAT WERE SHUTDOWN (312-744-5070).
12. SLOWLY OPEN THE NEW 48" BUTTERFLY VALVE (NOTE 9) AND FILL THE NEW WATER MAIN. FLUSH ALL AIR FROM THE SYSTEM.
13. CLOSE THE 48" BUTTERFLY VALVE AND PRESSURE TEST THE NEW 48" WATER MAIN SEGMENT IN ACCORDANCE WITH THE CONTRACT DOCUMENTS.
14. AFTER APPROVAL OF THE PRESSURE TEST, DEWATER THE NEW 48" WATER MAIN IN PREPARATION FOR MAKING THE FINAL CONNECTION.
15. REMOVE THE TEMPORARY PLUG AND FLUSHING HYDRANT FROM THE 48" TEE (NOTE 6). INSTALL 24" PLUG IN BRANCH OUTLET. BUILD BASIN PER THE DETAILS.
16. INSTALL 48" PIPE AND 2 - 48" X 1/4 BENDS TO THE EAST AS SHOWN TO ADJUST THE VERTICAL ALIGNMENT OF THE PIPELINE. BUILD PIPE SUPPORT, TYPE 3.
17. INSTALL 1-54"X 48" STEEL TRANSITION REDUCER. WELD THE 54" JOINT.
18. CONNECT TO THE NEW 48" WATER MAIN WITH 48" PIPE AND 1-48" MJ SLEEVE.
19. CONTACT CDWM TO OPERATE VALVES FOR FILLING AND FLUSHING THE WATER MAIN.
20. DISINFECT PER THE CONTRACT DOCUMENTS. AFTER APPROVAL OF DISINFECTION, WATER MAIN MAY BE PUT INTO SERVICE.
21. RESTORE ALL WATER MAIN TRENCHES PER THE DETAILED DRAWING.

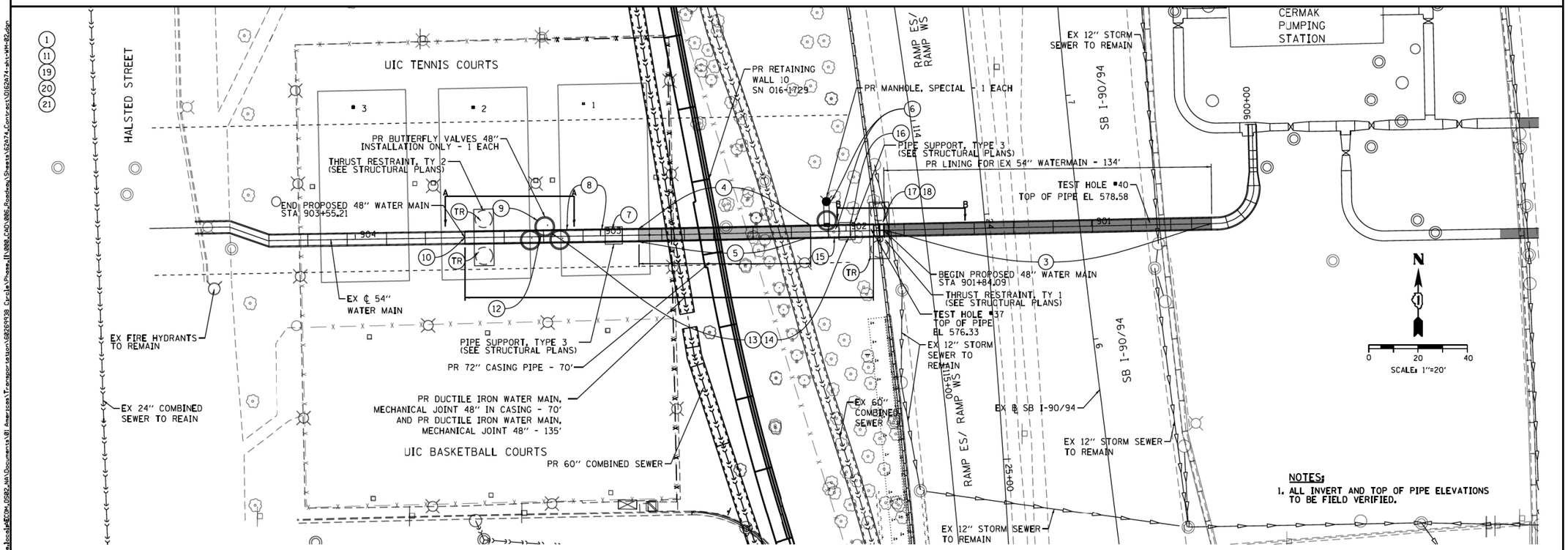

PROPOSED SOUTHWEST WATER MAIN REPLACEMENT

AECOM 303 EAST WACKER DRIVE, SUITE 1400 CHICAGO, IL 60601-5276 PHONE: (312) 373-7700 FAX: (312) 373-6800	D162A74-sht-WM-02.dgn	DESIGNED - RBB	REVISED -	STATE OF ILLINOIS DEPARTMENT OF TRANSPORTATION	PROPOSED SOUTHWEST WATER MAIN REPLACEMENT	F.A.I. RTE.	SECTION	COUNTY	TOTAL SHEETS	SHEET NO.
	USER NAME = PIMSARNO	DRAWN - CRH	REVISED -			90/94/290	2015-022-I	COOK	275	108
	PLOT SCALE = 40.0000 ' / in.	CHECKED - MJE	REVISED -					CONTRACT NO. 62A74		
	PLOT DATE = 5/15/2017	DATE - 05/15/2017	REVISED -		SCALE: 1"=20' SHEET 2 OF 12 SHEETS STA. TO STA.			ILLINOIS FED. AID PROJECT		

FILE PATH = pw:\\AECOM-NA-AWS1.aecomonline.local:AECOM_DS02_NA\Documents\01 Americas\Transportation\60269938 Circle\Phase_II\000_CAD\006_Roadway\Sheets\62A74-sht-WM-02.dgn

AECOM 303 EAST WACKER DRIVE, SUITE 1400 CHICAGO, IL 60601-5276 PHONE: (312) 373-7700 FAX: (312) 373-6800	D162A77-SHT-EX-WATERMAIN-2017-1962-01.dgn	DESIGNED -	REVISED -	STATE OF ILLINOIS DEPARTMENT OF TRANSPORTATION	EXISTING WATER MAIN PLANS	F.A.I. RTE.	SECTION	COUNTY	TOTAL SHEETS	SHEET NO.
	USER NAME = ChiuA	DRAWN -	REVISED -			90/94/290	2015-018R	COOK	1360	581
	PLOT SCALE = 40.0000 ' / in.	CHECKED -	REVISED -					CONTRACT NO. 62A77		
	PLOT DATE = 1/29/2020	DATE - 1/29/2019	REVISED -		SCALE: SHEET 1 OF 11 SHEETS STA. TO STA.			ILLINOIS FED. AID PROJECT		

FILE PATH = pw:\\AECOM-NA-AWS1.aecomonline.local:AECOM_DS02_NA\Documents\01 Americas\Transportation\60269938 Circle\Phase_II\000_CAD\006_Roadway\Sheets\62A77 Contracts\D162A77-SHT-EX-WATERMAIN-2017-1962-01.dgn

FOR INFORMATION ONLY

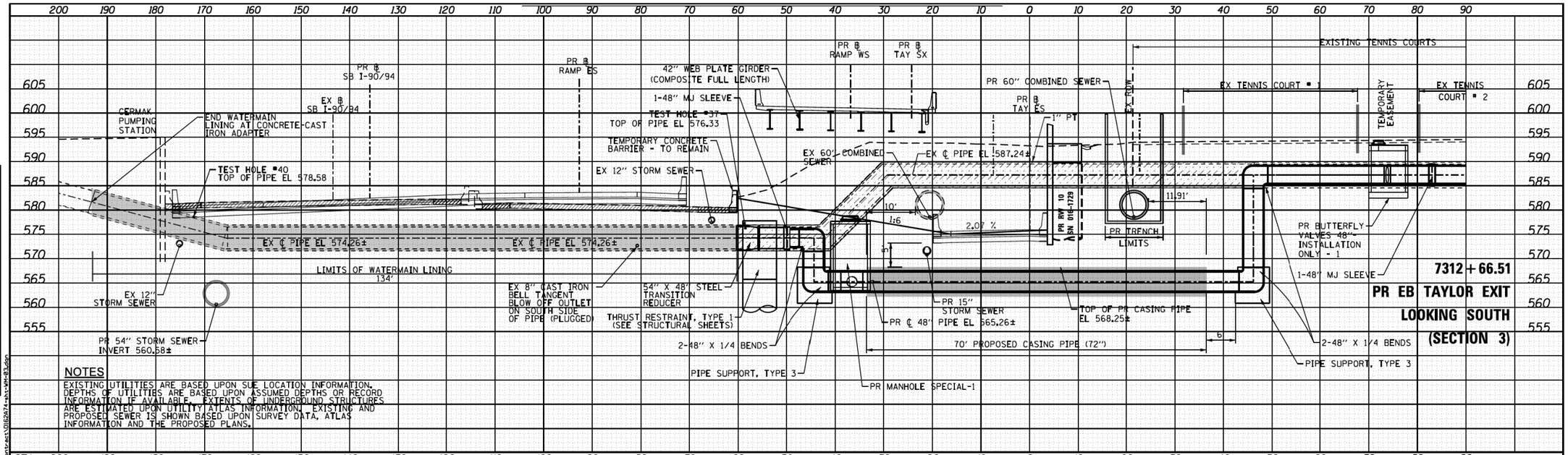

NOTES

EXISTING UTILITIES ARE BASED UPON SUE LOCATION INFORMATION. DEPTHS OF UTILITIES ARE BASED UPON ASSUMED DEPTHS OR RECORD INFORMATION IF AVAILABLE. EXTENTS OF UNDERGROUND STRUCTURES ARE ESTIMATED UPON UTILITY ATLAS INFORMATION. EXISTING AND PROPOSED SEWER IS SHOWN BASED UPON SURVEY DATA, ATLAS INFORMATION AND THE PROPOSED PLANS.

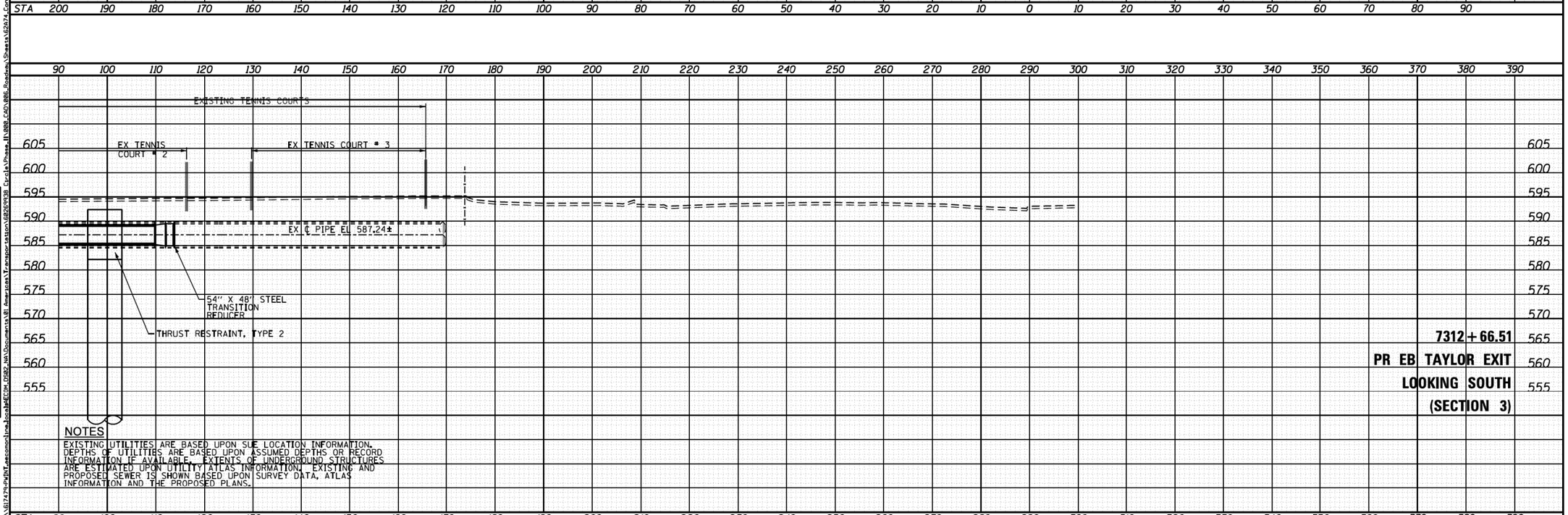

NOTES

EXISTING UTILITIES ARE BASED UPON SUE LOCATION INFORMATION. DEPTHS OF UTILITIES ARE BASED UPON ASSUMED DEPTHS OR RECORD INFORMATION IF AVAILABLE. EXTENTS OF UNDERGROUND STRUCTURES ARE ESTIMATED UPON UTILITY ATLAS INFORMATION. EXISTING AND PROPOSED SEWER IS SHOWN BASED UPON SURVEY DATA, ATLAS INFORMATION AND THE PROPOSED PLANS.

FINAL SURVEY — SURVEYED / PLOTTED / TABULATED / AREAS / AREAS CHECKED — NOTE BOOK NO. — BY — DATE

FILE PATH = pw:\\AECOM-NA-AWS1.aecomonline.local:AECOM-DS02_NA\Documents\01 Americas\Transportation\60269938 Circle\Phase II\000.CAD\006.Roadway\Sheets\62A74-sht-WM-03.dgn

AECOM 303 EAST WACKER DRIVE, SUITE 1400 CHICAGO, IL 60601-5276 PHONE: (312) 373-7700 FAX: (312) 373-6800	D162A74-sht-WM-03.dgn	DESIGNED - RBB	REVISED -
	USER NAME = PIMSARNO	DRAWN - CRH	REVISED -
	PLOT SCALE = 20.0000 ' / in.	CHECKED - MJE	REVISED -
	PLOT DATE = 5/15/2017	DATE - 05/15/2017	REVISED -

STATE OF ILLINOIS
DEPARTMENT OF TRANSPORTATION

CERMAK PUMPING STATION 54" SOUTH WEST WATER MAIN PROFILE
PROPOSED WATER MAIN REPLACEMENT AND LINING

SCALE: 1" = 10' | SHEET 3 OF 12 SHEETS | STA. 7312+66.51 TO STA. 7312+66.51

F.A.I. RTE.	SECTION	COUNTY	TOTAL SHEETS	SHEET NO.
90/94/290	2015-022-I	COOK	275	109
		CONTRACT NO. 62A74		
		ILLINOIS FED. AID PROJECT		

FILE PATH = pw:\\AECOM-NA-AWS1.aecomonline.local:AECOM-DS02_NA\Documents\01 Americas\Transportation\60269938 Circle\Phase II\000.CAD\006.Roadway\Sheets\62A77-SHT-EX-WATERMAIN-2017-1962-02.dgn

AECOM 303 EAST WACKER DRIVE, SUITE 1400 CHICAGO, IL 60601-5276 PHONE: (312) 373-7700 FAX: (312) 373-6800	D162A77-SHT-EX-WATERMAIN-2017-1962-02.dgn	DESIGNED -	REVISED -
	USER NAME = ChiuA	DRAWN -	REVISED -
	PLOT SCALE = 40.0000 ' / in.	CHECKED -	REVISED -
	PLOT DATE = 1/29/2020	DATE - 1/29/2019	REVISED -

STATE OF ILLINOIS
DEPARTMENT OF TRANSPORTATION

EXISTING WATER MAIN PLANS

SCALE: | SHEET 2 OF 11 SHEETS | STA. TO STA.

F.A.I. RTE.	SECTION	COUNTY	TOTAL SHEETS	SHEET NO.
90/94/290	2015-018R	COOK	1360	582
		CONTRACT NO. 62A77		
		ILLINOIS FED. AID PROJECT		

FOR INFORMATION ONLY

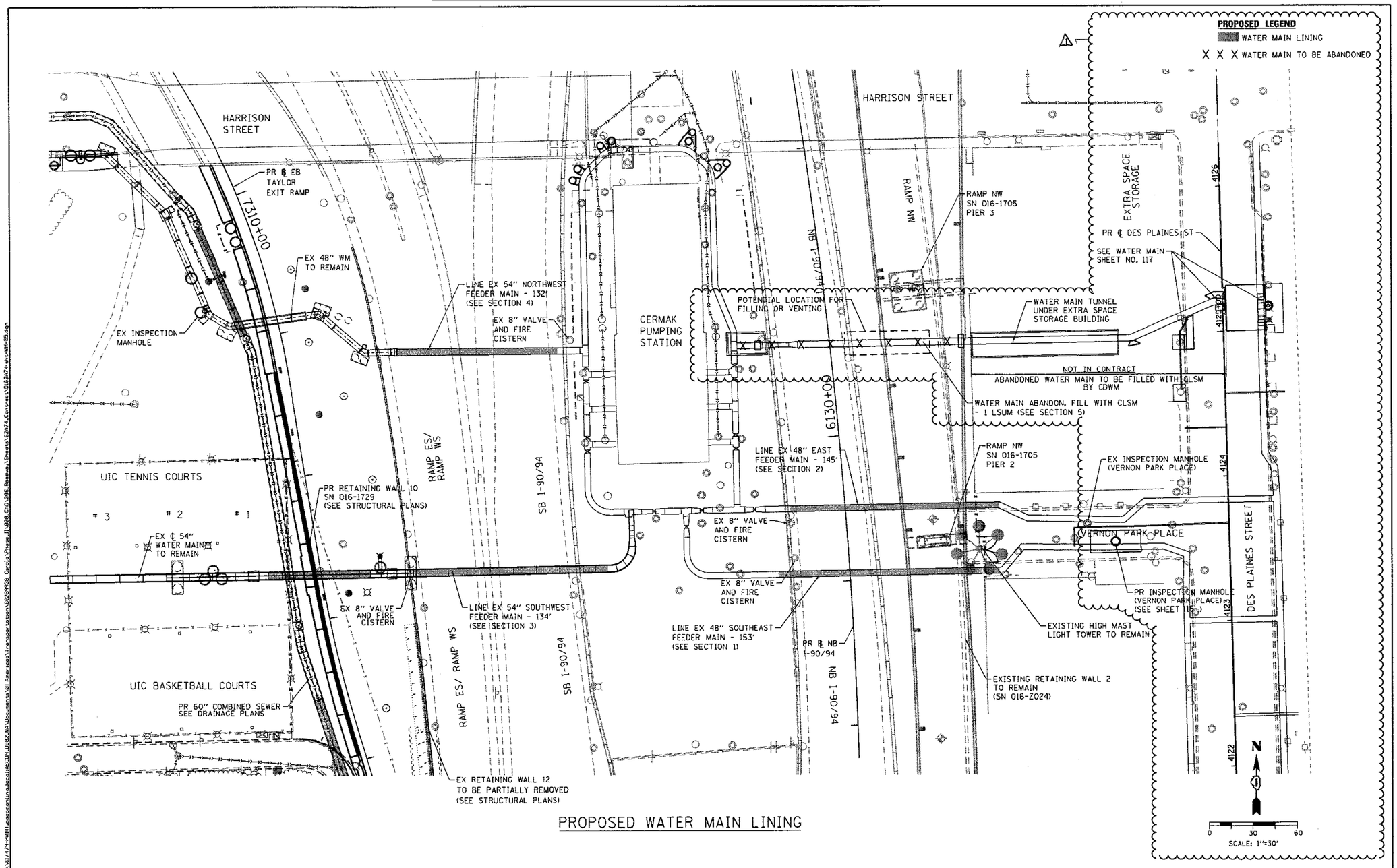

PROPOSED WATER MAIN LINING

AECOM 303 EAST WACKER DRIVE, SUITE 1400 CHICAGO, IL 60601-5276 PHONE: (312) 373-7700 FAX: (312) 373-6800	D162A74-sht-WM-05.dgn	DESIGNED - RBB	REVISED - 7/14/2017	STATE OF ILLINOIS DEPARTMENT OF TRANSPORTATION	PROPOSED WATER MAIN LINING	F.A.I. RTE. 90/94/290	SECTION 2015-022-1	COUNTY COOK	TOTAL SHEETS 275 / SHEET NO. 111
	USER NAME = ChiuA	DRAWN - CRH	REVISED -					CONTRACT NO. 62A74	
	PLOT SCALE = 60.0000 ' / in.	CHECKED - MJE	REVISED -						
	PLOT DATE = 7/13/2017	DATE - 05/15/2017	REVISED -		SCALE: 1"=30' SHEET 5 OF 12 SHEETS STA. TO STA.	ILLINOIS FED. AID PROJECT			

REV 7-19-17

AECOM 303 EAST WACKER DRIVE, SUITE 1400 CHICAGO, IL 60601-5276 PHONE: (312) 373-7700 FAX: (312) 373-6800	D162A77-SHT-EX-WATERMAIN-2017-1962-03.dgn	DESIGNED -	REVISED -	STATE OF ILLINOIS DEPARTMENT OF TRANSPORTATION	EXISTING WATER MAIN PLANS	F.A.I. RTE. 90/94/290	SECTION 2015-018R	COUNTY COOK	TOTAL SHEETS 1360 / SHEET NO. 583
	USER NAME = ChiuA	DRAWN -	REVISED -					CONTRACT NO. 62A77	
	PLOT SCALE = 40.0000 ' / in.	CHECKED -	REVISED -						
	PLOT DATE = 1/29/2020	DATE - 1/29/2019	REVISED -		SCALE: SHEET 3 OF 11 SHEETS STA. TO STA.	ILLINOIS FED. AID PROJECT			

FOR INFORMATION ONLY

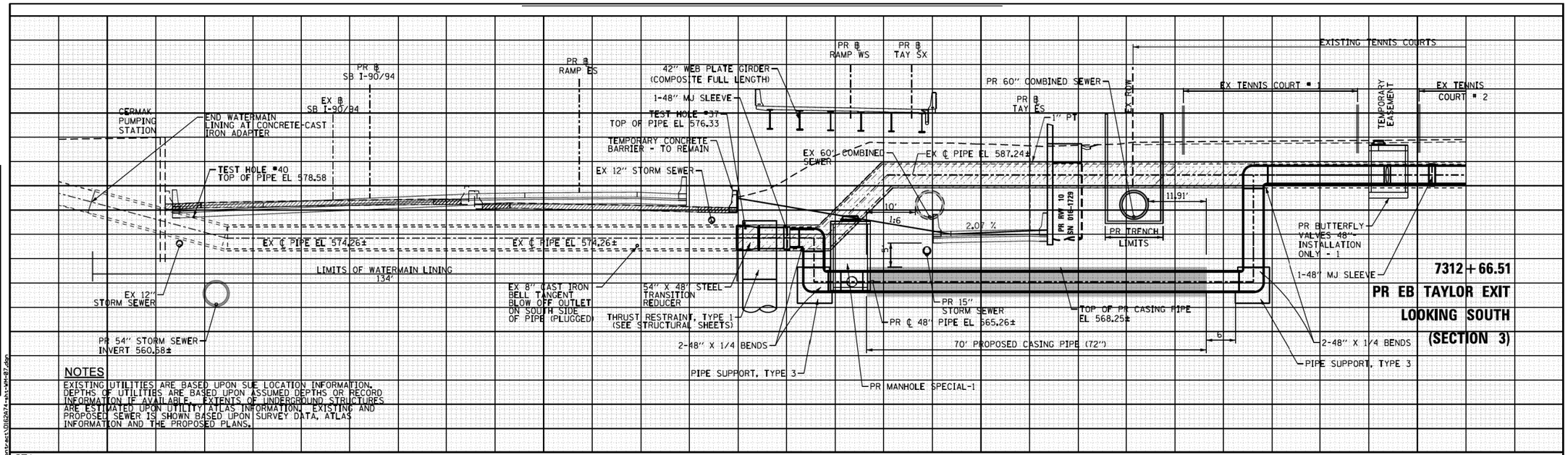

NOTES

EXISTING UTILITIES ARE BASED UPON SUE LOCATION INFORMATION. DEPTHS OF UTILITIES ARE BASED UPON ASSUMED DEPTHS OR RECORD INFORMATION IF AVAILABLE. EXTENTS OF UNDERGROUND STRUCTURES ARE ESTIMATED UPON UTILITY ATLAS INFORMATION. EXISTING AND PROPOSED SEWER IS SHOWN BASED UPON SURVEY DATA, ATLAS INFORMATION AND THE PROPOSED PLANS.

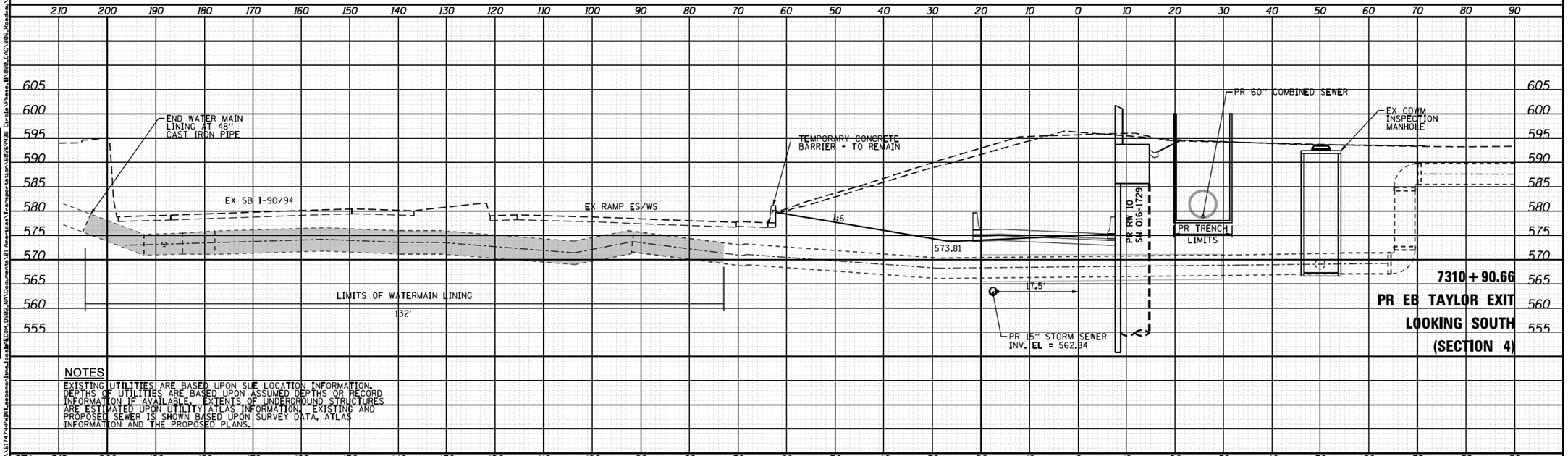

NOTES

EXISTING UTILITIES ARE BASED UPON SUE LOCATION INFORMATION. DEPTHS OF UTILITIES ARE BASED UPON ASSUMED DEPTHS OR RECORD INFORMATION IF AVAILABLE. EXTENTS OF UNDERGROUND STRUCTURES ARE ESTIMATED UPON UTILITY ATLAS INFORMATION. EXISTING AND PROPOSED SEWER IS SHOWN BASED UPON SURVEY DATA, ATLAS INFORMATION AND THE PROPOSED PLANS.

FINAL SURVEY: SURVEYED / PLOTTED / TRAVERSE / NOTE BOOK / AREAS / AREAS CHECKED / NO. / BY / DATE

FILE PATH = pw:\\AECOM-NA-AWS1.aecomonline.local:AECOM-DS02-NA\Documents\01 Americas\Transportation\60269938 Circle\Phase II\000.CAD\006.Roadway\Sheets\62A74-sht-WM-07.dgn

AECOM 303 EAST WACKER DRIVE, SUITE 1400 CHICAGO, IL 60601-5276 PHONE: (312) 373-7700 FAX: (312) 373-6800	D162A74-sht-WM-07.dgn	DESIGNED - RBB	REVISED -
	USER NAME = PIMSARNO	DRAWN - CRH	REVISED -
	PLOT SCALE = 20.0000 ' / in.	CHECKED - MJE	REVISED -
	PLOT DATE = 5/15/2017	DATE - 05/15/2017	REVISED -

STATE OF ILLINOIS
DEPARTMENT OF TRANSPORTATION

CERMAK PUMPING STATION 54" WEST WATER MAIN PROFILE
PROPOSED WATER MAIN REPLACEMENT AND LINING

SCALE: 1" = 10' | SHEET 7 OF 12 SHEETS | STA. 7310+90.66 TO STA. 7310+90.66

F.A.I. RTE.	SECTION	COUNTY	TOTAL SHEETS	SHEET NO.
90/94/290	2015-022-I	COOK	275	113
		CONTRACT NO. 62A74		
		ILLINOIS FED. AID PROJECT		

FILE PATH = pw:\\AECOM-NA-AWS1.aecomonline.local:AECOM-DS02-NA\Documents\01 Americas\Transportation\60269938 Circle\Phase II\000.CAD\006.Roadway\Sheets\62A77-SHT-EX-WATERMAIN-2017-1962-04.dgn

AECOM 303 EAST WACKER DRIVE, SUITE 1400 CHICAGO, IL 60601-5276 PHONE: (312) 373-7700 FAX: (312) 373-6800	D162A77-SHT-EX-WATERMAIN-2017-1962-04.dgn	DESIGNED -	REVISED -
	USER NAME = ChiuA	DRAWN -	REVISED -
	PLOT SCALE = 40.0000 ' / in.	CHECKED -	REVISED -
	PLOT DATE = 1/29/2020	DATE - 1/29/2019	REVISED -

STATE OF ILLINOIS
DEPARTMENT OF TRANSPORTATION

EXISTING WATER MAIN PLANS

SCALE: | SHEET 4 OF 11 SHEETS | STA. TO STA.

F.A.I. RTE.	SECTION	COUNTY	TOTAL SHEETS	SHEET NO.
90/94/290	2015-018R	COOK	1360	584
		CONTRACT NO. 62A77		
		ILLINOIS FED. AID PROJECT		

FOR INFORMATION ONLY

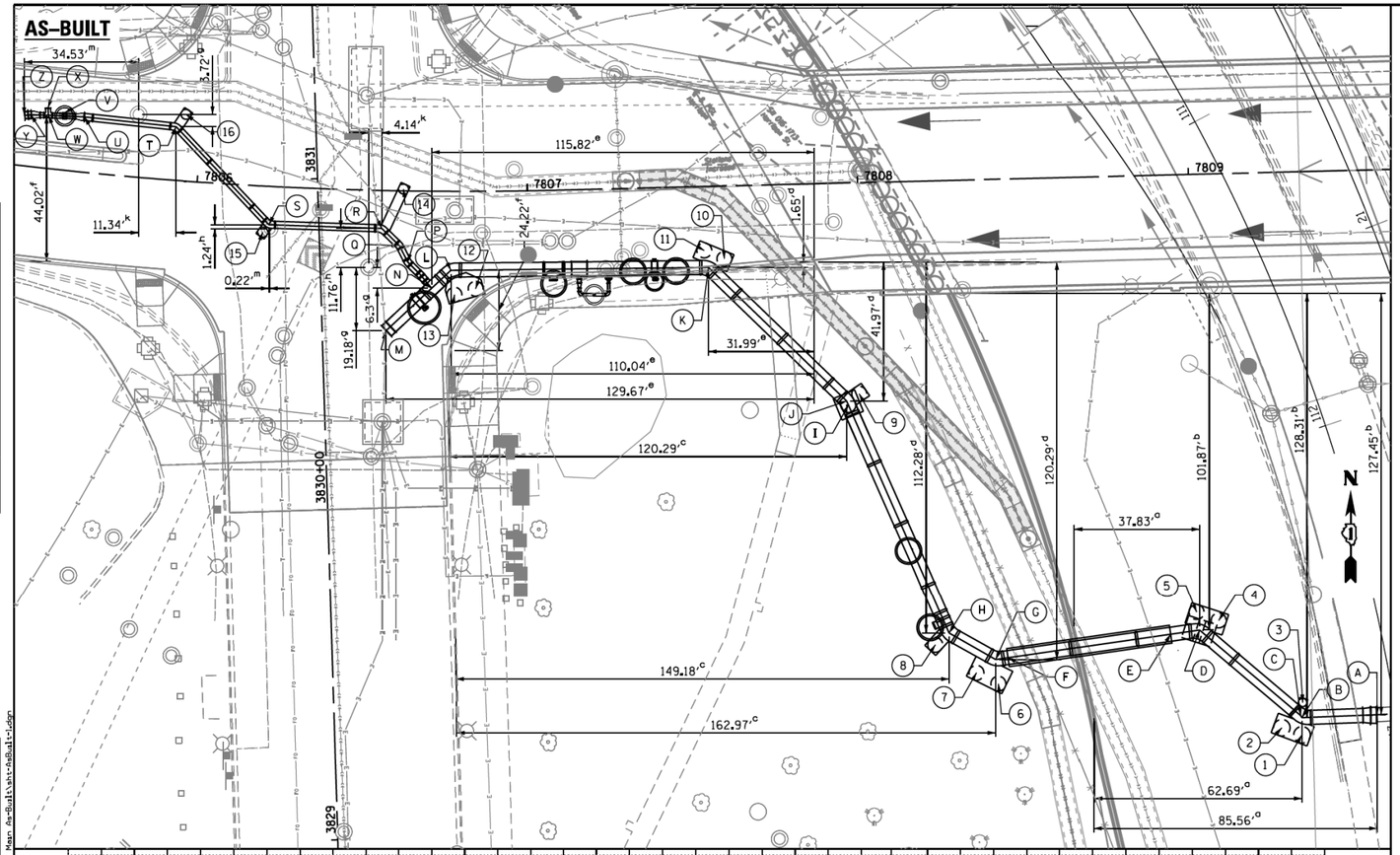

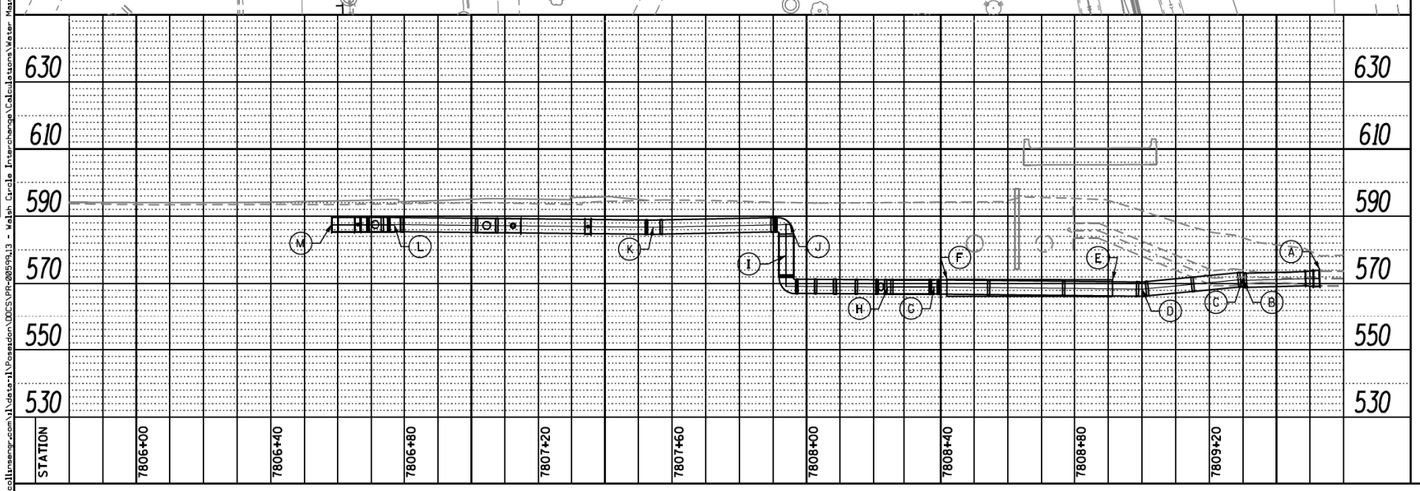

℄ 48"Ø WATER MAIN AS-BUILT:

A. TIE-IN TO EXISTING WATER MAIN
7809+52.91 @ 164.78' RT
TOP/PIPE EL. 573.71'

B. ℄ BEND
7809+30.2 @ 165.07' RT
℄ EL. 570.82'

C. ℄ BEND
7809+29.85 @ 164.49' RT
℄ EL. 571.09'

D. ℄ BEND
7808+99.97 @ 137.87' RT
℄ EL. 568.24'

E. END OF CASING
7808+91.20 @ 139' RT
TOP EL. 571.03'

F. END OF CASING
7808+41.83 @ 145.44' RT
TOP EL. 571.12'

G. ℄ BEND
7808+38.09 @ 145.22' RT
℄ EL. 568.89'

H. ℄ BEND
7808+24.26 @ 136.86' RT
℄ EL. 568.91'

I. ℄ RISER
7807+94 @ 66.25' RT
TOP EL. 587.55'
BOTTOM EL. 569.05'
TOP THRUSH EL. 572.55'

J. ℄ BEND
7807+95.06 @ 65.80' RT
℄ EL. 587.47'

K. ℄ BEND
7807+54.38 @ 24.46' RT
℄ EL. 586.66'

L. ℄ BEND
7806+77.01 @ 23.86' RT
℄ EL. 587.47'

M. TIE-IN TO EXISTING WATER MAIN
7806+58.13 @ 42.36' RT
℄ EL. 587.47'

℄ 24"Ø WATER MAIN AS-BUILT:

N. 24" TEE
7806+71.34 @ 29.22' RT
EL. 587.29' @ ℄ 48"Ø W.M.

O. ℄ 24" @ BEND
7806+67.88 @ 25.13' RT
℄ EL. 587.37

P. ℄ 24" @ BEND
7806+64.20 @ 21.48' RT
℄ EL. 583.75'

Q. ℄ 24" @ BEND
7806+61.71 @ 16.58' RT
℄ EL. 583.45'

R. ℄ 24" @ BEND
7806+56.33 @ 11.94' RT
℄ EL. 588.61'

S. ℄ 24" @ BEND
7806+22.30 @ 11.56' RT
℄ EL. 587.7'

T. ℄ 24" @ BEND
7805+92.43 @ 16.18' LT
℄ EL. 587.90'

U. 24" x 16"
7805+64.17 @ 16.65' LT
TOP/PIPE EL. 588.50'

V. TOP/VALVE
7805+58.08 @ 16.63' LT
EL. 590.15'

W. 16" x 12" TEE @ TOP/PIPE
7805+53.14 @ 16.01' LT
EL. 587.74'

X. ℄ 12" @ BEND & TOP
7805+52.75 @ 18.23' LT
EL. 588.51

Y. 24" x 16"
7805+47.8 @ 15.57' LT
TOP/PIPE EL. 588.25'

Z. 24" TIE-IN
7805+45.90 @ 15.17' LT
TOP/PIPE 588.13'

THRUST BLOCK AS-BUILT AT 48"Ø WATER MAIN:

1. THRUST BLOCK
7809+30.1 @ 170.27' RT
EL. 566.89'

2. THRUST BLOCK
7809+24.04 @ 167.98' RT
EL. 566.55'

3. THRUST BLOCK
7809+30.56 @ 160.54' RT
EL. 568.98'

4. THRUST BLOCK
7809+05.77 @ 135.11' RT
EL. 566.51'

5. THRUST BLOCK
7808+99.16 @ 132.40' RT
EL. 566.54'

6. THRUST BLOCK
7808+38 @ 152.56' RT
EL. 567.15'

7. THRUST BLOCK
7808+32.23 @ 149.11' RT
EL. 567.05'

8. THRUST BLOCK
7808+19.98 @ 140.35' RT
EL. 567.11'

9. THRUST BLOCK
7807+98.82 @ 63.73' RT
EL. 585.34'

10. THRUST BLOCK
7807+59.21 @ 21.98' RT
EL. 584.20'

11. THRUST BLOCK
7807+53.21 @ 19.31' RT
EL. 584.61'

12. THRUST BLOCK
7806+84.33 @ 29.42' RT
EL. 582.33'

13. THRUST BLOCK
7806+78.08 @ 31.21' RT
EL. 583.40'

THRUST BLOCK AS-BUILT AT 24"Ø WATER MAIN:

14. THRUST BLOCK
7806+62.65 @ 0.55' LT
EL. 584.90'

15. THRUST BLOCK
7806+20.62 @ 13.91' RT
EL. 586.25'

16. THRUST BLOCK
7805+95.13 @ 20.12' LT
EL. 586.14'

SHOWN DIMENSIONS MEASURED:

a. WEST FROM RETENTION WALL

b. SOUTH FROM SOUTHEAST END OF WEST ABUTMENT

c. EAST FROM BACK OF CURB

d. SOUTH OF JOINT BETWEEN ROADWAY PAVEMENT AND BRIDGE APPROACH

e. WEST OF SOUTHEAST CORNER OF BACK OF CURB

f. NORTH OF BACK OF CURB

g. SOUTH OF CENTER OF MANHOLE

h. NORTH OF CENTER OF MANHOLE

k. EAST OF CENTER OF MANHOLE

m. WEST OF CENTER OF MANHOLE

sht-AsBuilt-1.dgn	DESIGNED -	REVISED -	
USER NAME = dmckane	DRAWN - DMM	REVISED -	
PLOT SCALE = 40.0000 ' / in.	CHECKED - JMS	REVISED -	
PLOT DATE = 8/11/2015	DATE - 5/1/15	REVISED -	

STATE OF ILLINOIS
DEPARTMENT OF TRANSPORTATION

WATER MAIN
AS-BUILT PLAN AND 48" W.M. PROFILE

SCALE: | SHEET OF SHEETS | STA. TO STA.

F.A.I. RTE.	SECTION	COUNTY	TOTAL SHEETS	SHEET NO.
90/94/290	2013-007R	COOK	1	2
		CONTRACT NO. 60W26		
		ILLINOIS FED. AID PROJECT		

FILE PATH = \\civilnaexp.com\il\data-il\Evanston\DGS\PR-0059913 - Wilson Circle Interchange\Calculations\Water Main As-Built\sht-AsBuilt-1.dgn

AECOM
303 EAST WACKER DRIVE, SUITE 1400
CHICAGO, IL 60601-5276
PHONE: (312) 373-7700 FAX: (312) 373-6800

D162A77-SHT-EX-WATERMAIN-2017-1962-05.dgn	DESIGNED -	REVISED -
USER NAME = ChiuA	DRAWN -	REVISED -
PLOT SCALE = 40.0000 ' / in.	CHECKED -	REVISED -
PLOT DATE = 1/29/2020	DATE - 1/29/2019	REVISED -

STATE OF ILLINOIS
DEPARTMENT OF TRANSPORTATION

EXISTING WATER MAIN PLANS

SCALE: | SHEET 5 OF 11 SHEETS | STA. TO STA.

F.A.I. RTE.	SECTION	COUNTY	TOTAL SHEETS	SHEET NO.
90/94/290	2015-018R	COOK	1360	585
		CONTRACT NO. 62A77		
		ILLINOIS FED. AID PROJECT		

FILE PATH = pw:\\AECOM-NA-AWSiaecomonline.local:AECOM_DS02_NA\Documents\01 Americas\Transportation\60269938 Circle\Phase_II\000.CAD\006.Roadway\Sheets\62A77 Contracts\D162A77-SHT-EX-WATERMAIN-2017-1962-05.dgn

FOR INFORMATION ONLY

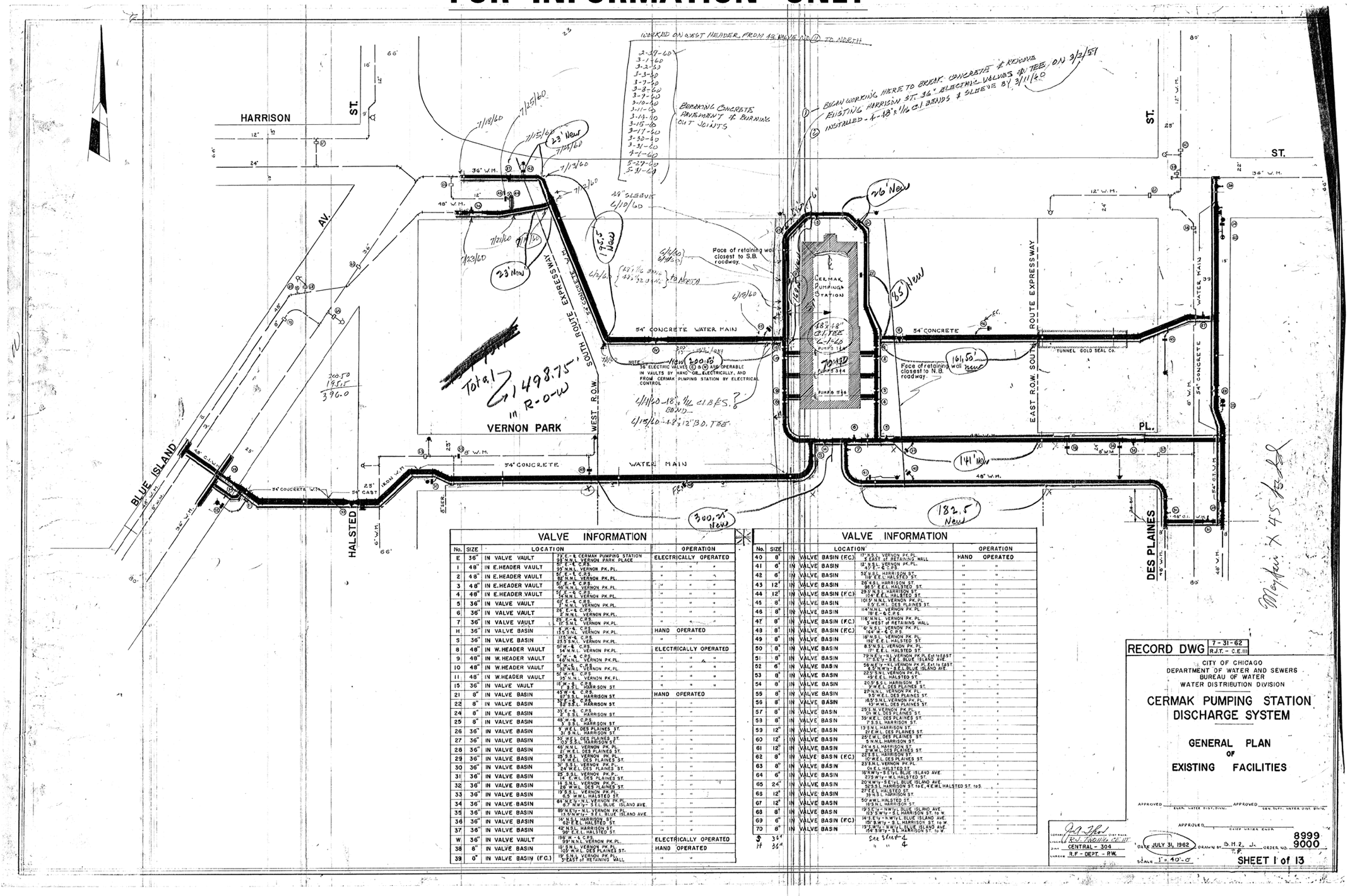

VALVE INFORMATION

No.	SIZE	LOCATION	OPERATION
E	36"	IN VALVE VAULT — 73' E. & CERMAK PUMPING STATION; 33' N.N.L. VERNON PARK PLACE	ELECTRICALLY OPERATED
1	48"	IN E.HEADER VAULT — 51' E. & C.P.S. 33' N.N.L. VERNON PK. PL.	" " "
2	48"	IN E.HEADER VAULT — 51' E. & C.P.S. 50' N.N.L. VERNON PK. PL.	" " "
3	48"	IN E.HEADER VAULT — 51' E. & C.P.S. 46' N.N.L. VERNON PK. PL.	" " "
4	48"	IN E.HEADER VAULT — 51' E. & C.P.S. 14' N.N.L. VERNON PK. PL.	" " "
5	36"	IN VALVE VAULT — 62' W. & C.P.S. 2' N.N.L. VERNON PK. PL.	" " "
6	36"	IN VALVE VAULT — 26' W. & C.P.S. 2' N.N.L. VERNON PK. PL.	" " "
7	36"	IN VALVE VAULT — 27' S.N.L. VERNON PK. PL.	" " "
H	36"	IN VALVE BASIN — 13.5' W. & C.P.S. 13.5' S.N.L. VERNON PK. PL.	HAND OPERATED
S	36"	IN VALVE BASIN — 11.5' W. & C.P.S. 23.5' S.N.L. VERNON PK. PL.	" "
8	48"	IN W.HEADER VAULT — 50' W. & C.P.S. 14' N.N.L. VERNON PK. PL.	ELECTRICALLY OPERATED
9	48"	IN W.HEADER VAULT — 5' W. & C.P.S. 46' N.N.L. VERNON PK. PL.	" " "
10	48"	IN W.HEADER VAULT — 5' W.N.L. C.P.S. 32' N.N.L. VERNON PK. PL.	" " "
11	48"	IN W.HEADER VAULT — 5' W. & C.P.S. 35' N.N.L. VERNON PK. PL.	" " "
15	36"	IN VALVE VAULT — 18' W. & C.P.S. 1' S.S.L. HARRISON ST.	" " "
21	8"	IN VALVE BASIN — 45' W. & C.P.S. 67' S.S.L. HARRISON ST.	HAND OPERATED
22	8"	IN VALVE BASIN — 32' E. & C.P.S. 82' S.S.L. HARRISON ST.	" "
24	8"	IN VALVE BASIN — 33' E. & C.P.S. 3' S.S.L. HARRISON ST.	" "
25	8"	IN VALVE BASIN — 49' W. & C.P.S. 3' S.S.L. HARRISON ST.	" "
26	36"	IN VALVE BASIN — 5' W.E.L. DES PLAINES ST. 31' S.N.L. HARRISON ST.	" "
27	36"	IN VALVE BASIN — 30' W.E.L. DES PLAINES ST. 5' S.N.L. HARRISON ST.	" "
28	36"	IN VALVE BASIN — 40' N.N.L. VERNON PK. PL. 27' W.E.L. DES PLAINES ST.	" "
29	36"	IN VALVE BASIN — 25' N.N.L. VERNON PK. PL. 31' W.E.L. DES PLAINES ST.	" "
30	36"	IN VALVE BASIN — 31' N.N.L. VERNON PK. PL. 24' W.E.L. DES PLAINES ST.	" "
31	36"	IN VALVE BASIN — 25' S.S.L. VERNON PK. PL. 14' E.W.L. DES PLAINES ST.	" "
32	36"	IN VALVE BASIN — 14' S.N.L. VERNON PK. PL. 26' W.E.L. DES PLAINES ST.	" "
33	36"	IN VALVE BASIN — 19' S.S.L. VERNON PK. PL. 6.5' W.W.L. HALSTED ST.	" "
34	36"	IN VALVE BASIN — 64' N.E.ly-N.L. VERNON PK. PL. 67' N.W.ly-S.E.L. BLUE ISLAND AVE.	" "
35	36"	IN VALVE BASIN — 89' N.E.ly-N.L. VERNON PK. PL. 15.5' N.W.ly-S.E.L. BLUE ISLAND AVE.	" "
36	36"	IN VALVE BASIN — 14' N.S.L. HARRISON ST. 62' E.E.L. HALSTED ST.	" "
37	36"	IN VALVE BASIN — 42' N.S.L. HARRISON ST. 98' E.E.L. HALSTED ST.	" "
W	36"	IN VALVE VAULT — 198' W. & C.P.S. 59' N.N.L. VERNON PK. PL.	ELECTRICALLY OPERATED
38	8"	IN VALVE BASIN — 16' S.N.L. VERNON PK. PL. 105' W.W.L. DES PLAINES ST.	HAND OPERATED
39	6"	IN VALVE BASIN (F.C.) — 19' S.N.L. VERNON PK. PL. 3' EAST of RETAINING WALL	" "

VALVE INFORMATION

No.	SIZE	LOCATION	OPERATION
40	6"	IN VALVE BASIN (F.C.) — 17' N.S.L. VERNON PK. PL. 2' EAST of RETAINING WALL	HAND OPERATED
41	6"	IN VALVE BASIN — 12' N.S.L. VERNON PK. PL. 43' E. C.P.S.	" "
42	6"	IN VALVE BASIN — 52' N.S.L. HARRISON ST. 118' E.E.L. HALSTED ST.	" "
43	12"	IN VALVE BASIN — 28' W.S.L. HARRISON ST. 98.5' E.E.L. HALSTED ST.	" "
44	12"	IN VALVE BASIN (F.C.) — 29.5' N.S.L. HARRISON ST. 104' E.E.L. HALSTED ST.	" "
45	8"	IN VALVE BASIN — 101.5' N.N.L. VERNON PK. PL. 5.5' E.W.L. DES PLAINES ST.	" "
46	8"	IN VALVE BASIN — 114' N.N.L. VERNON PK. PL. 78' E. & C.P.S.	" "
47	6"	IN VALVE BASIN (F.C.) — 116' N.N.L. VERNON PK. PL. 5' WEST of RETAINING WALL	" "
48	8"	IN VALVE BASIN (F.C.) — 6' N.S.L. VERNON PK. PL. 164' W. & C.P.S.	" "
49	8"	IN VALVE BASIN — 18' N.S.L. VERNON PK. PL. 197' E.E.L. HALSTED ST.	" "
50	8"	IN VALVE BASIN — 8.5' N.S.L. VERNON PK. PL. 77' E.E.L. HALSTED ST.	" "
51	8"	IN VALVE BASIN — 79' N.E.ly-N.L. VERNON PK. PL. 5' EAST 17' S.E.ly-S.E.L. BLUE ISLAND AVE.	" "
52	6"	IN VALVE BASIN — 56' N.E.ly-N.L. VERNON PK. PL. 5' EAST to EAST 17' S.W.ly-S.E.L. BLUE ISLAND AVE.	" "
53	8"	IN VALVE BASIN — 22.5' S.N.L. VERNON PK. PL. 49' E.E.L. HALSTED ST.	" "
54	8"	IN VALVE BASIN — 20.5' S.S.L. HARRISON ST. 3' W.E.L. DES PLAINES ST.	" "
55	8"	IN VALVE BASIN — 27' N.N.L. VERNON PK. PL. 9.5' W.E.L. DES PLAINES ST.	" "
56	8"	IN VALVE BASIN — 18.5' S.N.L. VERNON PK. PL. 43' W.W.L. DES PLAINES ST.	" "
57	6"	IN VALVE BASIN — 29.5' N.VERNON PK.PL. 0' W.L. DES PLAINES ST.	" "
58	8"	IN VALVE BASIN — 39' W.E.L. DES PLAINES ST. 7.5' S.S.L. HARRISON ST.	" "
59	12"	IN VALVE BASIN — 13.5' N.L. HARRISON ST. 21' E.W.L. DES PLAINES ST.	" "
60	12"	IN VALVE BASIN — 25' E.W.L. DES PLAINES ST. 5' N.N.L. HARRISON ST.	" "
61	12"	IN VALVE BASIN — 24' N.S.L. HARRISON ST. 2' W.W.L. DES PLAINES ST.	" "
62	8"	IN VALVE BASIN (F.C.) — 22' S.L. HARRISON ST. 10' W.E.L. DES PLAINES ST.	" "
63	8"	IN VALVE BASIN — 23' S.N.L. VERNON PK.PL. 0' E.L. HALSTED ST.	" "
64	6"	IN VALVE BASIN — 16' N.W.ly-S.E.L. BLUE ISLAND AVE. 27' S.W.ly-W.L. HALSTED ST.	" "
65	24"	IN VALVE BASIN — 20' N.W.ly-S.E.L. BLUE ISLAND AVE. 30' S.S.L. HARRISON ST. to E., 4' E.W.L. HALSTED ST. to S.	" "
66	12"	IN VALVE BASIN — 27' E.L. HALSTED ST. 39' N.S.L. HARRISON ST.	" "
67	12"	IN VALVE BASIN — 50' E.W.L. HALSTED ST. 0' N.S.L. HARRISON ST.	" "
68	8"	IN VALVE BASIN — 19' N.W.ly-S.E.L. BLUE ISLAND AVE. 33' S.W.ly-W.L. HARRISON ST. to W.	" "
69	6"	IN VALVE BASIN (F.C.) — 14.5' E.W.ly-N.W.ly-L. BLUE ISLAND AVE. 10' S.W.L. HARRISON ST. to W.	" "
70	8"	IN VALVE BASIN — 19' S.W.ly-N.W.L. BLUE ISLAND AVE. 56' S.W.ly-W.L. HARRISON ST. to W.	" "
S	36"	See Sheet 4	
H	36"	" " 4	

RECORD DWG 7-31-62 R.J.T. - C.E.III

CITY OF CHICAGO
DEPARTMENT OF WATER AND SEWERS
BUREAU OF WATER
WATER DISTRIBUTION DIVISION

CERMAK PUMPING STATION DISCHARGE SYSTEM

GENERAL PLAN OF EXISTING FACILITIES

APPROVED _____ GEN. WATER DIST. DIVISN. APPROVED _____ GEN. SUPT. WATER DIST. DIVISN.

APPROVED _____ CHIEF WATER ENGR.

CHIEF ENGINEER R.J. Tabulis C.E. III
DIV. CENTRAL - 304
DIRECTOR R.F. - DEPT. - R.W.

DATE JULY 31, 1962 DRAWN BY S.H.Z. J.F. ORDER NO. 8999 9000

SCALE 1" = 40'-0"

SHEET 1 of 13

FILE PATH = pw:\\AECOM-NA-AWS\aecomonline.local\AECOM_DS02_NA\Documents\01 Americas\Transportation\60269938 Circle\Phase_II\000.CAD\006.Roadway\Sheets\62A77 Contracts\D162A77-SHT-EX-WATERMAIN-2017-1962-06.dgn

AECOM
303 EAST WACKER DRIVE, SUITE 1400
CHICAGO, IL 60601-5276
PHONE: (312) 373-7700 FAX: (312) 373-6800

D162A77-SHT-EX-WATERMAIN-2017-1962-06.dgn	DESIGNED -	REVISED -	
USER NAME = ChiuA	DRAWN -	REVISED -	
PLOT SCALE = 40.0000 ' / in.	CHECKED -	REVISED -	
PLOT DATE = 1/29/2020	DATE - 1/29/2019	REVISED -	

STATE OF ILLINOIS
DEPARTMENT OF TRANSPORTATION

EXISTING WATER MAIN PLANS

SCALE: | SHEET 6 OF 11 SHEETS | STA. TO STA.

F.A.I. RTE.	SECTION	COUNTY	TOTAL SHEETS	SHEET NO.
90/94/290	2015-018R	COOK	1360	586

CONTRACT NO. 62A77

ILLINOIS FED. AID PROJECT

FOR INFORMATION ONLY

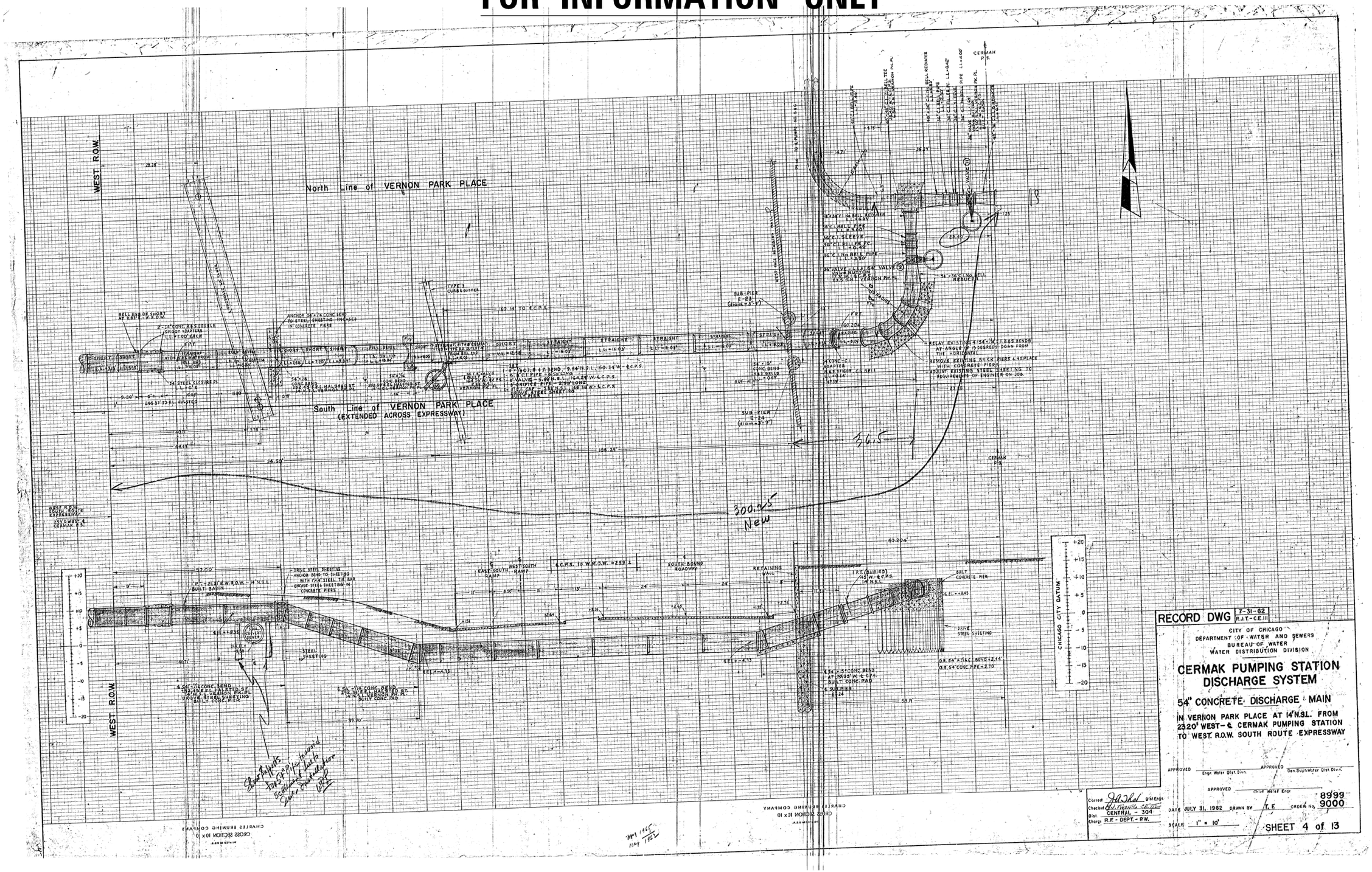

FILE PATH = pw:\\AECOM-NA-AWS\aecomonline.local:AECOM.DS02.NA\Documents\01 Americas\Transportation\60269938 Circle\Phase II\000.CAD\006.Roadway\Sheets\62A77 Contracts\D162A77-SHT-EX-WATERMAIN-2017-1962-07.dgn

AECOM
303 EAST WACKER DRIVE, SUITE 1400
CHICAGO, IL 60601-5276
PHONE: (312) 373-7700 FAX: (312) 373-6800

D162A77-SHT-EX-WATERMAIN-2017-1962-07.dgn	DESIGNED -	REVISED -
USER NAME = ChuA	DRAWN -	REVISED -
PLOT SCALE = 40.0000 ' / in.	CHECKED -	REVISED -
PLOT DATE = 1/29/2020	DATE - 1/29/2019	REVISED -

STATE OF ILLINOIS
DEPARTMENT OF TRANSPORTATION

EXISTING WATER MAIN PLANS

SCALE: | SHEET 7 OF 11 SHEETS | STA. | TO STA.

F.A.I. RTE.	SECTION	COUNTY	TOTAL SHEETS	SHEET NO.
90/94/290	2015-018R	COOK	1360	587
		CONTRACT NO. 62A77		
		ILLINOIS FED. AID PROJECT		

FOR INFORMATION ONLY

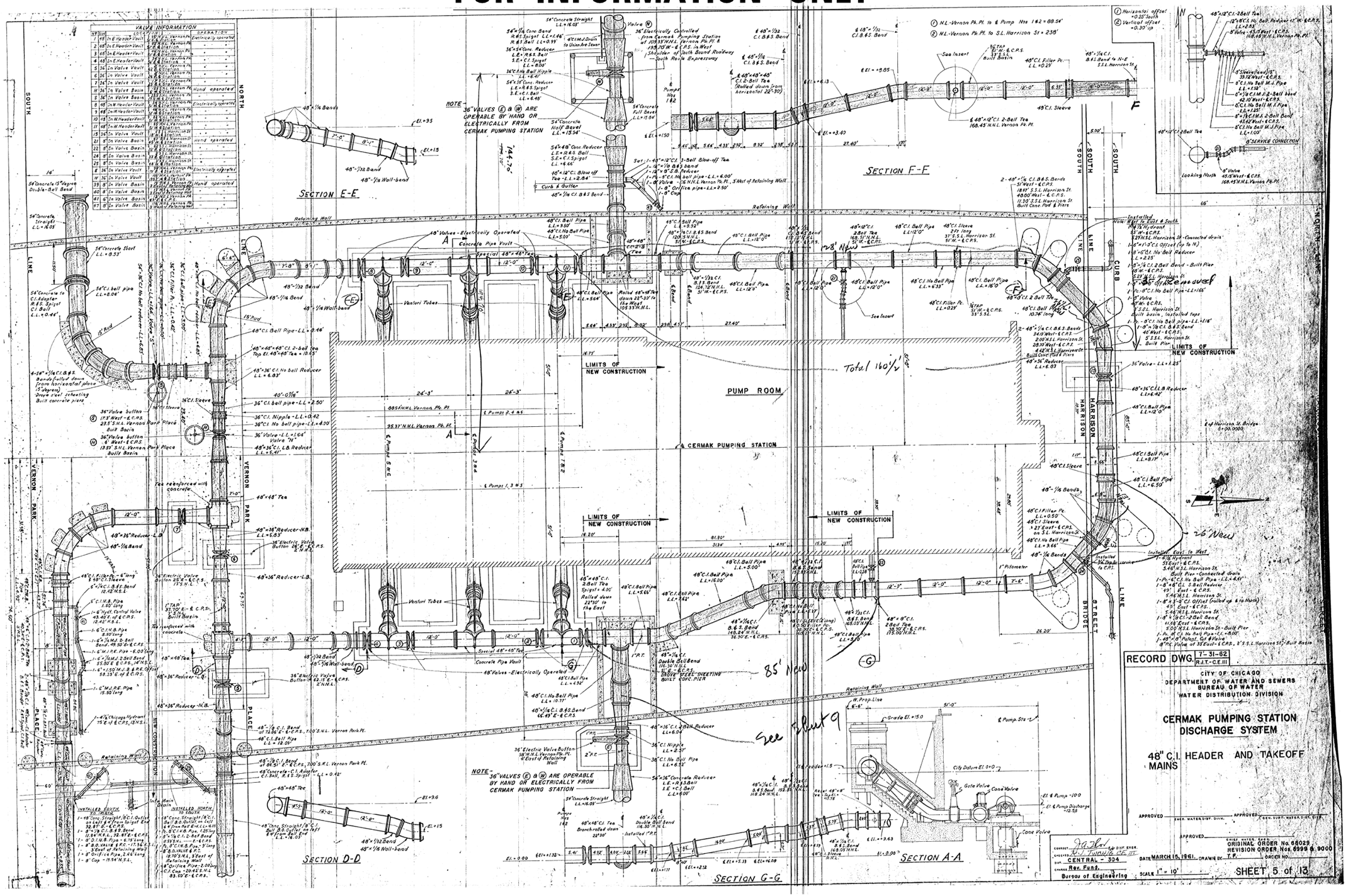

AECOM 303 EAST WACKER DRIVE, SUITE 1400 CHICAGO, IL 60601-5276 PHONE: (312) 373-7700 FAX: (312) 373-6800	D162A77-SHT-EX-WATERMAIN-2017-1962-08.dgn	DESIGNED -	REVISED -
	USER NAME = ChiuA	DRAWN -	REVISED -
	PLOT SCALE = 40.0000 ' / in.	CHECKED -	REVISED -
	PLOT DATE = 1/29/2020	DATE - 1/29/2019	REVISED -

STATE OF ILLINOIS
DEPARTMENT OF TRANSPORTATION

EXISTING WATER MAIN PLANS

SCALE: | SHEET 8 OF 11 SHEETS | STA. | TO STA.

F.A.I. RTE.	SECTION	COUNTY	TOTAL SHEETS	SHEET NO.
90/94/290	2015-018R	COOK	1360	588

CONTRACT NO. 62A77

ILLINOIS FED. AID PROJECT

FILE PATH = pw:\\AECOM-NA-AWS\aecomonline.local\AECOM.DS02.NA\Documents\01 Americas\Transportation\60269938 Circle\Phase II\000.CAD\006.Roadway\Sheets\62A77 Contracts\D162A77-SHT-EX-WATERMAIN-2017-1962-08.dgn

FOR INFORMATION ONLY

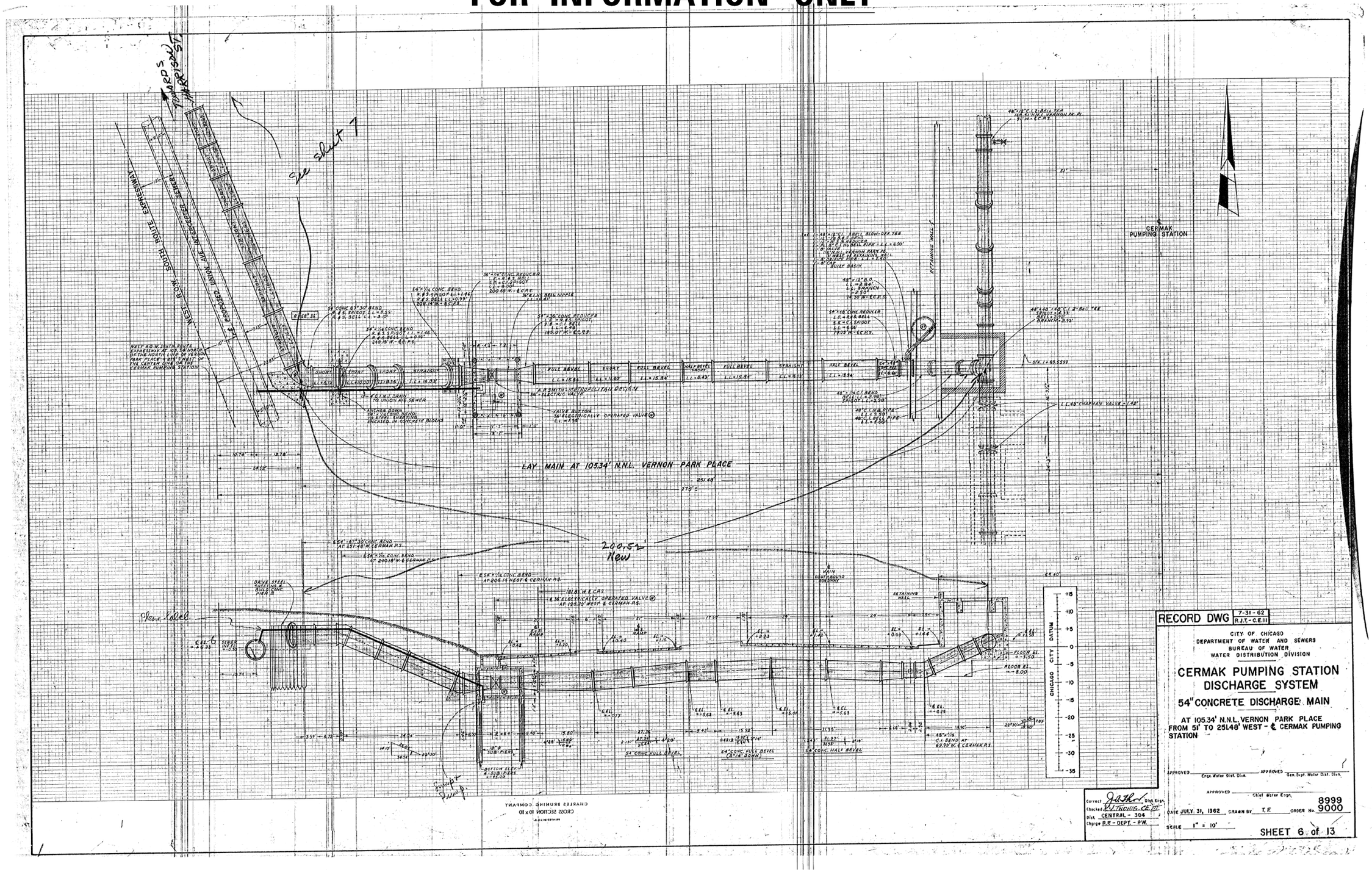

FILE PATH = pw:\\AECOM-NA-AWS1.aecomonline.local:AECOM_DS02_NA\Documents\01 Americas\Transportation\60269938 Circle\Phase_II\000_CAD\006_Roadway\Sheets\62A77 Contract\D162A77-SHT-EX-WATERMAIN-2017-1962-09.dgn

AECOM 303 EAST WACKER DRIVE, SUITE 1400 CHICAGO, IL 60601-5276 PHONE: (312) 373-7700 FAX: (312) 373-6800	D162A77-SHT-EX-WATERMAIN-2017-1962-09.dgn	DESIGNED -	REVISED -	STATE OF ILLINOIS DEPARTMENT OF TRANSPORTATION	EXISTING WATER MAIN PLANS	F.A.I. RTE.	SECTION	COUNTY	TOTAL SHEETS	SHEET NO.
	USER NAME = ChiuA	DRAWN -	REVISED -			90/94/290	2015-018R	COOK	1360	589
	PLOT SCALE = 40.0000 ' / in.	CHECKED -	REVISED -			CONTRACT NO. 62A77				
	PLOT DATE = 1/29/2020	DATE - 1/29/2019	REVISED -		SCALE: SHEET 9 OF 11 SHEETS STA. TO STA.	ILLINOIS FED. AID PROJECT				

FOR INFORMATION ONLY

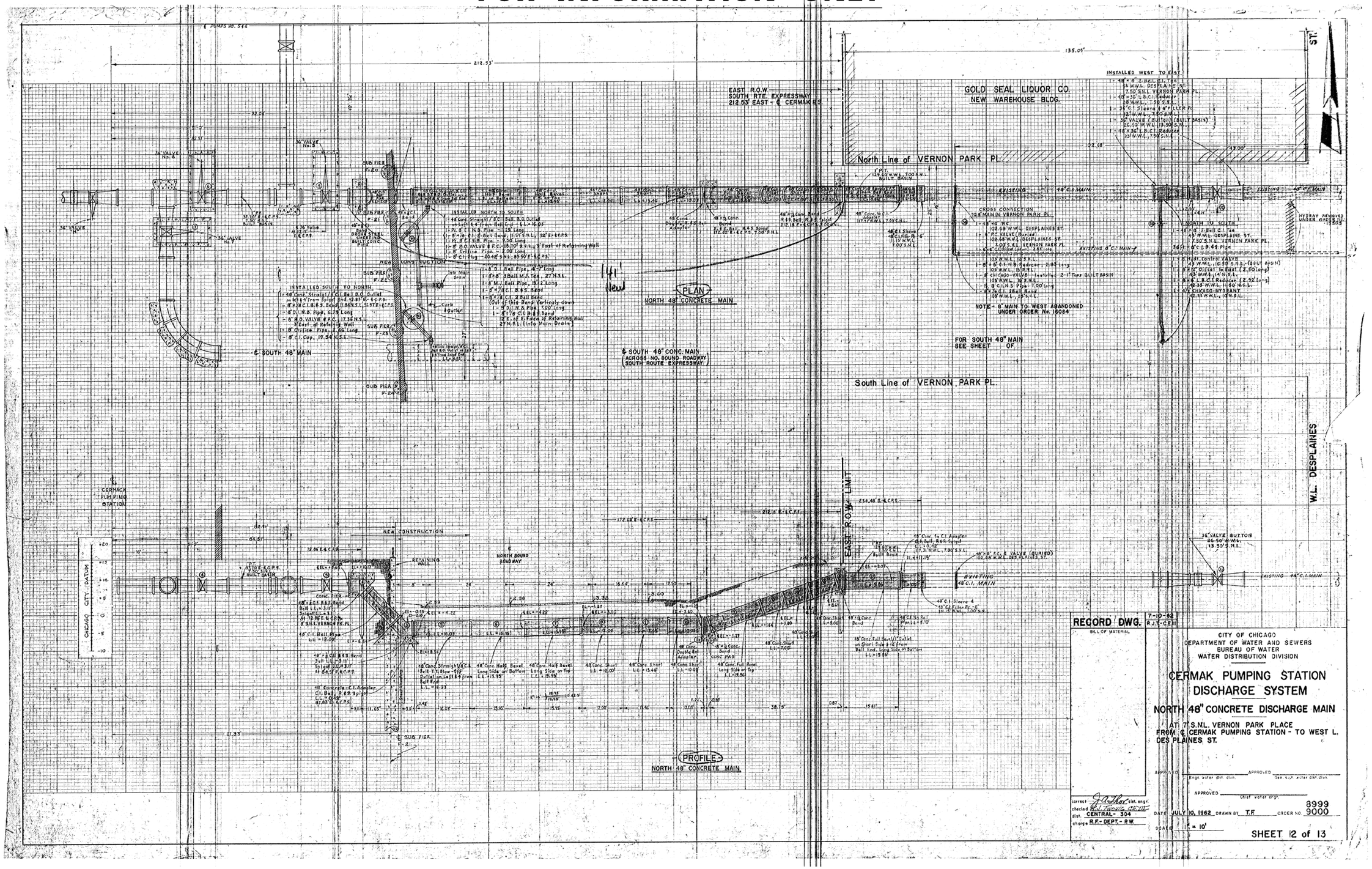

FILE PATH = pw:\\AECOM-NA-AWS\Leecomonline.local\AECOM_DS02_NA\Documents\01 Americas\Transportation\60269938 Circle\Phase_II\000_CAD\006_Roadway\Sheets\62A77 Contracts\D162A77-SHT-EX-WATERMAIN-2017-1962-10.dgn

AECOM
303 EAST WACKER DRIVE, SUITE 1400
CHICAGO, IL 60601-5276
PHONE: (312) 373-7700 FAX: (312) 373-6800

D162A77-SHT-EX-WATERMAIN-2017-1962-10.dgn	DESIGNED -	REVISED -	
USER NAME = ChiuA	DRAWN -	REVISED -	
PLOT SCALE = 40.0000 ' / in.	CHECKED -	REVISED -	
PLOT DATE = 1/29/2020	DATE - 1/29/2019	REVISED -	

STATE OF ILLINOIS
DEPARTMENT OF TRANSPORTATION

EXISTING WATER MAIN PLANS

SCALE: SHEET 10 OF 11 SHEETS STA. TO STA.

F.A.I. RTE.	SECTION	COUNTY	TOTAL SHEETS	SHEET NO.
90/94/290	2015-018R	COOK	1360	590

CONTRACT NO. 62A77

ILLINOIS FED. AID PROJECT

FOR INFORMATION ONLY

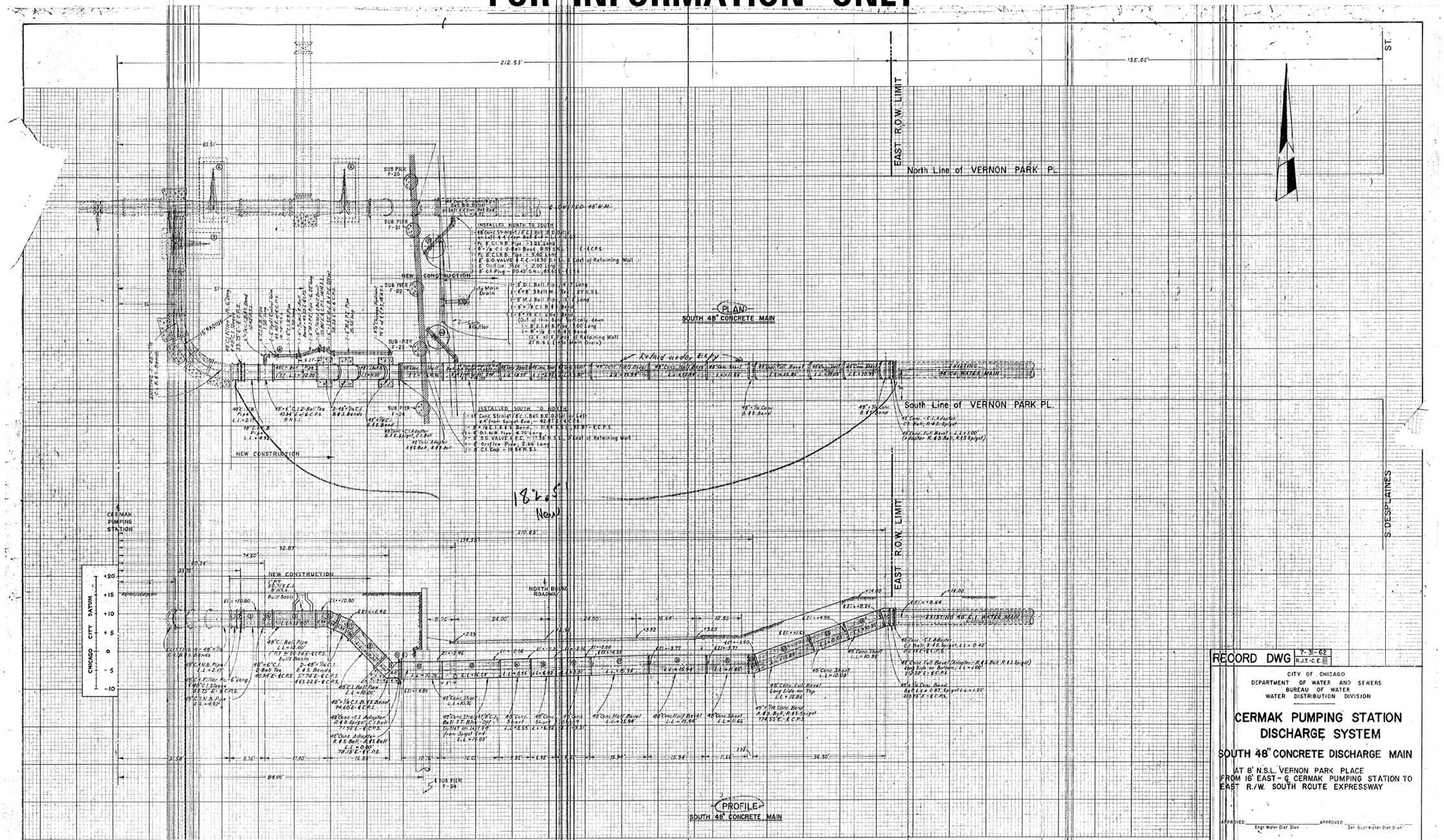

RECORD DWG 7-3-62 R.J.T.-C.E.III

CITY OF CHICAGO
DEPARTMENT OF WATER AND SEWERS
BUREAU OF WATER
WATER DISTRIBUTION DIVISION

CERMAK PUMPING STATION DISCHARGE SYSTEM

SOUTH 48" CONCRETE DISCHARGE MAIN

AT 8' N.S.L. VERNON PARK PLACE
FROM 16' EAST - ℄ CERMAK PUMPING STATION TO
EAST R.W. SOUTH ROUTE EXPRESSWAY

APPROVED _____ Engr Water Dist. Divn. APPROVED _____ Gen. Supt. Water Dist. Divn.

APPROVED _____ Chief Water Engr.

Correct: J. A. Thor Chf. Engr.
Checked: Robert J. Twohig, C.E. III
Dist. CENTRAL - 304
Charge: R.F. - DEPT. - P.W.

DATE JULY 31, 1962 DRAWN BY T.F. ORDER No. 8999 9000

SCALE 1" = 10' SHEET 13 of 13

FILE PATH = pw:\\AECOM-NA-AWS\aecomonline.local\AECOM_DS02_NA\Documents\01 Americas\Transportation\60269938 Circle\Phase_II\000_CAD\006_Roadway\Sheets\62A77-SHT-EX-WATERMAIN-2017-1962-11.dgn

AECOM
303 EAST WACKER DRIVE, SUITE 1400
CHICAGO, IL 60601-5276
PHONE: (312) 373-7700 FAX: (312) 373-6800

D162A77-SHT-EX-WATERMAIN-2017-1962-11.dgn	DESIGNED -	REVISED -	
USER NAME = ChiuA	DRAWN -	REVISED -	
PLOT SCALE = 40.0000 ' / in.	CHECKED -	REVISED -	
PLOT DATE = 1/29/2020	DATE - 1/29/2019	REVISED -	

STATE OF ILLINOIS
DEPARTMENT OF TRANSPORTATION

EXISTING WATER MAIN PLANS

SCALE: | SHEET 11 OF 11 SHEETS | STA. | TO STA.

F.A.I. RTE.	SECTION	COUNTY	TOTAL SHEETS	SHEET NO.
90/94/290	2015-018R	COOK	1360	591

CONTRACT NO. 62A77

ILLINOIS FED. AID PROJECT

FOR INFORMATION ONLY

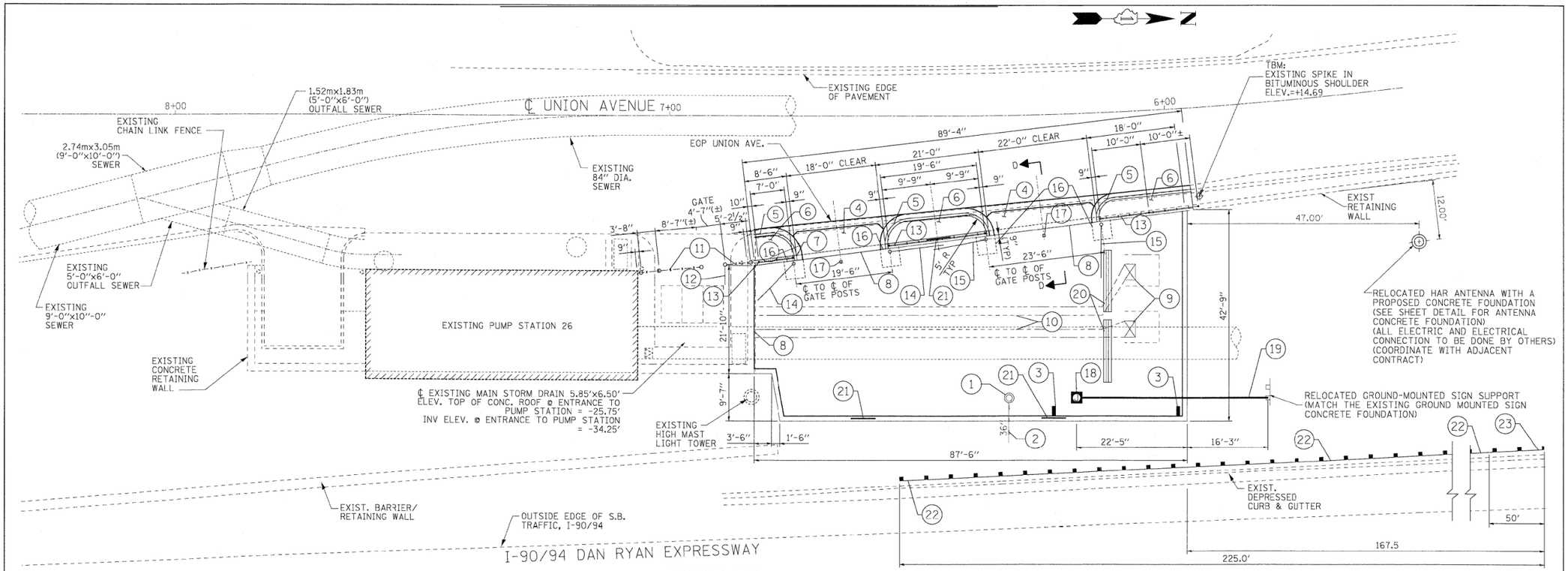

PROPOSED PLAN

LEGEND:

1. MANHOLE (EXISTING) RIM. EL= -3.95 INV EL (E) = -12.50± (EX.)
2. 36" RCCP (EXISTING) (FROM I-90/94 DRAINAGE SYSTEM)
3. DRAINAGE SCUPPER, DS-12 (SEE STRUCTURAL PLANS)
4. 10" PORTLAND CEMENT CONCRETE DRIVEWAY PAVEMENT WITH PAVEMENT FABRIC AND 12" AGGREGATE SUBGRADE
5. COMBINATION CONCRETE CURB AND GUTTER, TYPE B-6.12 AND SUBBASE GRANULAR MATERIAL, TYPE B 6"
6. 10" HOT-MIX ASPHALT SHOULDERS AND SUBBASE GRANULAR MATERIAL, TYPE B 6"
7. STRUCTURAL REPAIR OF CONCRETE (DEPTH GREATER THAN 5")
8. ¾" PREFORMED JOINT FILLER
9. TRANSFORMER PLATFORM (BY OTHERS)
10. ELECTRICAL CONDUIT HANGERS ATTACHED TO STRUCTURE FOR TRANSFORMER (HANGERS ARE INCIDENTAL TO PCC DECK SLAB) (ALL CONDUITS AND WIRES TO CONNECT THE TRANSFORMERS WILL BE INSTALLED BY OTHERS)
11. CHAIN LINK FENCE, 7' (W/ BARBED WIRE)
12. CHAIN LINK GATES, 7' x 4' SINGLE, SPECIAL (W/ BARBED WIRE)
13. CHAIN LINK FENCE, 7' SPECIAL (W/ BARBED WIRE)
14. CHAIN LINK GATES, 7' x 10' DOUBLE, SPECIAL (W/ BARBED WIRE)
15. CHAIN LINK GATES, 7' x 12' DOUBLE, SPECIAL (W/ BARBED WIRE)
16. GATE POST CONNECTION ADJACENT TO EXISTING CONCRETE RETAINING WALL (SEE STRUCTURAL DETAIL) (INCIDENTAL TO GATE PAY ITEMS)
17. PLUNGER ROD CUP EMBEDDED IN CONCRETE (TYPICAL AT MEETINGS AT DOUBLE GATES) (INCIDENTIAL TO GATE PAY ITEMS)
18. JUNCTION BOX (WIRES TO BE SPICED AND BOX TO BE PLACE AT LOCATION OF EXISTING SIGN)
19. 2" PVC CONDUIT IN TRENCH AND TRENCH AND BACKFILL FOR ELECTRICAL WORK (ELECTRIC CABLE IN CONDUIT INCIDENTIAL TO RELOCATE GROUND-MOUNTED SIGN SUPPORT)
20. CONCRETE BARRIER (PAID FOR AS TEMPORARY CONCRETE BARRIER)
21. SIGN PANEL, TYPE 2 (SEE DETAIL)
22. STEEL PLATE BEAM GUARD RAIL, TYPE A, 6 FOOT POSTS
23. TRAFFIC BARRIER TERMINAL, TYPE 1 (SPECIAL) TANGENT

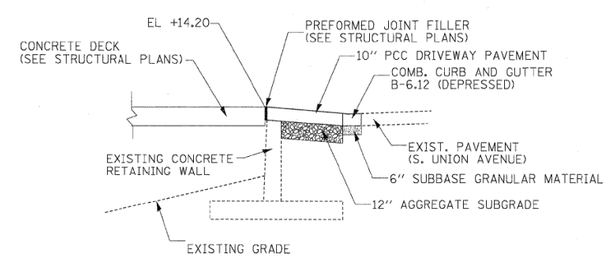

DETAIL D-D

NOTES:

1. REFER TO DRAINAGE, EROSION CONTROL & LANDSCAPING PLAN FOR ADDITIONAL INFORMATION.
2. CONTRACTOR TO FIELD VERIFY THE PROPOSED GATE SIZES.
3. TEMPORARY CONCRETE BARRIER SHALL BE FURNISH AND INSTALLED FOR PERMANENT USE. THE LOCATION WILL BE DETERMINED IN THE FIELD AND APPROVED BY THE ENGINEER.
4. WARNING SIGNS SHALL BE INSTALLED AND MOUNTED TO THE CHAIN LINK FENCE AND/OR THE RAILING ON THE PARAPET WALL IN ACCORDANCE WITH IDOT STANDARD 720001-01. MOUNTING SHALL BE DETERMINED BY THE CONTRACTOR AND APPROVED BY THE ENGINEER.
5. UTILIZE STANDARD 701601-07 AND 701801-04 FOR MOT, ADVANCE SIGNING AND SIDEWALK CLOSURES ALONG UNION AVENUE.

FILE NAME = $FILEL$	Primera	DESIGNED NWS	REVISED -	STATE OF ILLINOIS DEPARTMENT OF TRANSPORTATION	DAN RYAN PUMP STATION #26 RETAINING WALL AND TRUCK PARKING AREA PROPOSED SITE PLAN
		DRAWN NWS	REVISED -		
		CHECKED RJD	REVISED -		
		DATE 10/29/2010	REVISED -		SCALE: 1" = 10' SHEET NO. 1 OF 1 SHEETS

F.A.I. RTE.	SECTION	COUNTY	TOTAL SHEETS	SHEET NO.
90/94	2010-075-I	COOK	33	6
		CONTRACT NO. 60L61		
		ILLINOIS FED. AID PROJECT		

AECOM
303 EAST WACKER DRIVE, SUITE 1400
CHICAGO, IL 60601-5276
PHONE: (312) 373-7700 FAX: (312) 373-6800

D162A77-SHT-EX-PS26-1999-01.dgn	DESIGNED -	REVISED -	STATE OF ILLINOIS DEPARTMENT OF TRANSPORTATION
USER NAME = ChuA	DRAWN -	REVISED -	
PLOT SCALE = 40.0000 ' / in.	CHECKED -	REVISED -	
PLOT DATE = 1/29/2020	DATE - 1/29/2019	REVISED -	

EXISTING PUMP STATION #26 PLANS

SCALE: SHEET 1 OF 6 SHEETS STA. TO STA.

F.A.I. RTE.	SECTION	COUNTY	TOTAL SHEETS	SHEET NO.
90/94/290	2015-018R	COOK	1360	592
		CONTRACT NO. 62A77		
		ILLINOIS FED. AID PROJECT		

FILE PATH = pw:\\AECOM-NA-AWS1.aecomonline.local:AECOM_DS02_NA\Documents\01 Americas\Transportation\60269938 Circle\Phase II\000_CAD\006_Roadway\Sheets\62A77 Contracts\D162A77-SHT-EX-PS26-1999-01.dgn

FOR INFORMATION ONLY

Benchmark: Existing spike in bituminous shoulder of S. Union Avenue. Sta. 5+94.11, offset 18.07 ft. Elev. +14.69 (Chicago City Datum).

Existing Structure: Pumping station being rehabilitated under construction

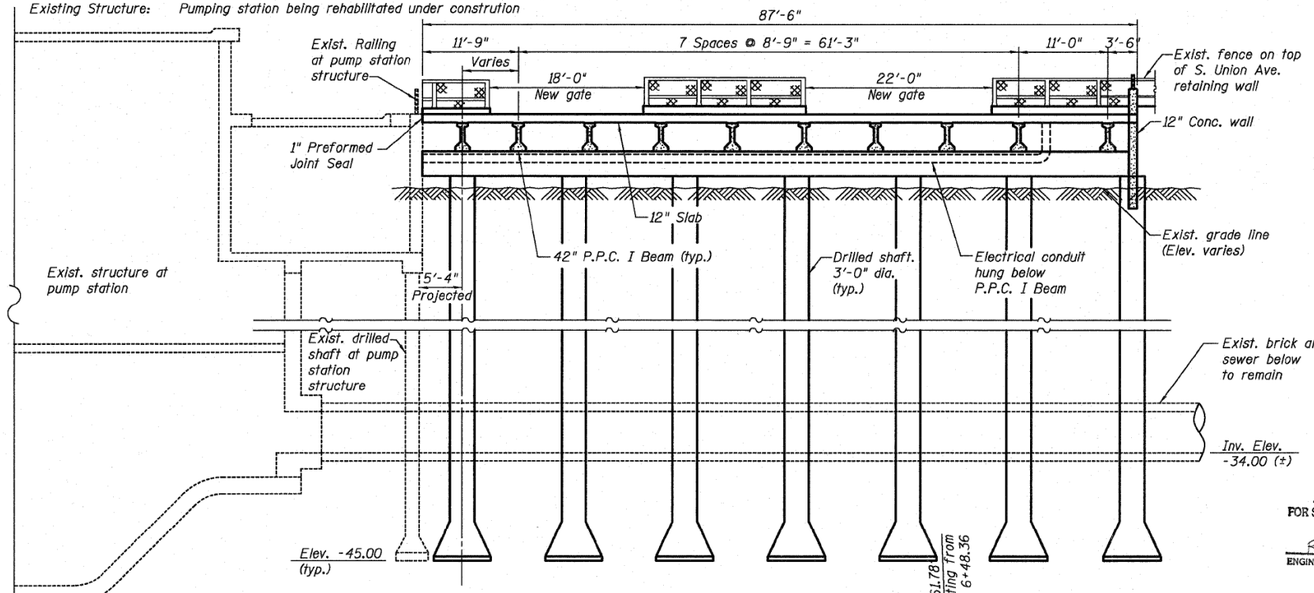

LONGITUDINAL SECTION A-A

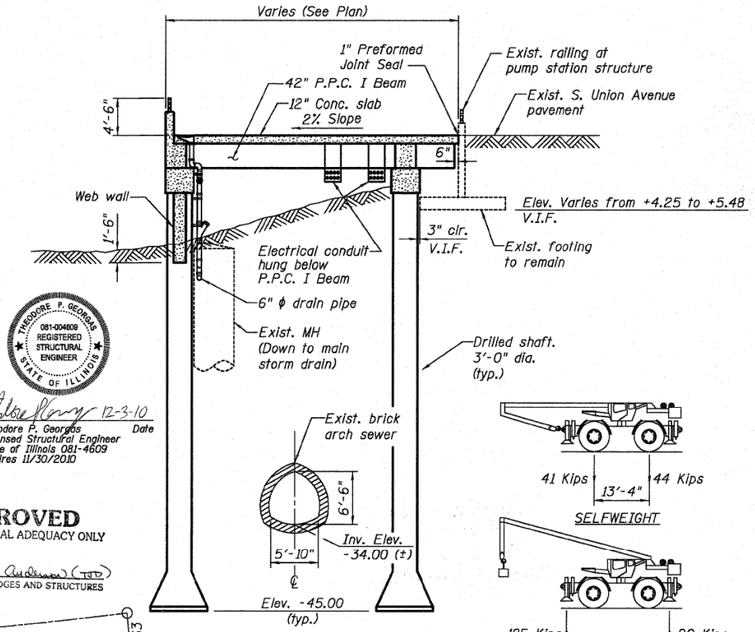

CROSS SECTION B-B

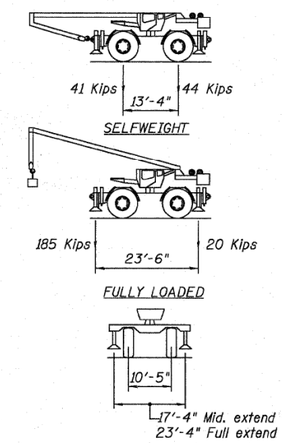

LOADING HL-93

Allow 50#/Sq. Ft. future wearing surface.

SPECIAL LOADING CRANE GROVE RT760E

Crane Capacity = 120 Kips
Crane Selfweight = 85 Kips

DESIGN SPECIFICATIONS

2010 AASHTO LRFD Bridge Design Specifications,

DESIGN STRESSES

FIELD UNITS

f'c = 3,500 psi
fy = 60,000 psi (Reinforcement)

PRECAST PRESTRESSED UNITS

f'c = 6,000 psi
f'ci = 5,000 psi
fpu = 270,000 psi (½" ϕ low relax. strands)
fpbt = 201,960 psi (½" ϕ low relax. strands)

SEISMIC DATA

Seismic Performance Zone (SPZ) = 1
Design Spectral Acceleration at 1.0 sec. (S_{D1}) = 0.085g
Design Spectral Acceleration at 0.2 sec. (S_{DS}) = 0.143g
Soil Site Class = D

60 TON CRANE LOADING

(GROVE RT760E)

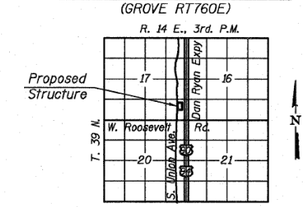

LOCATION SKETCH

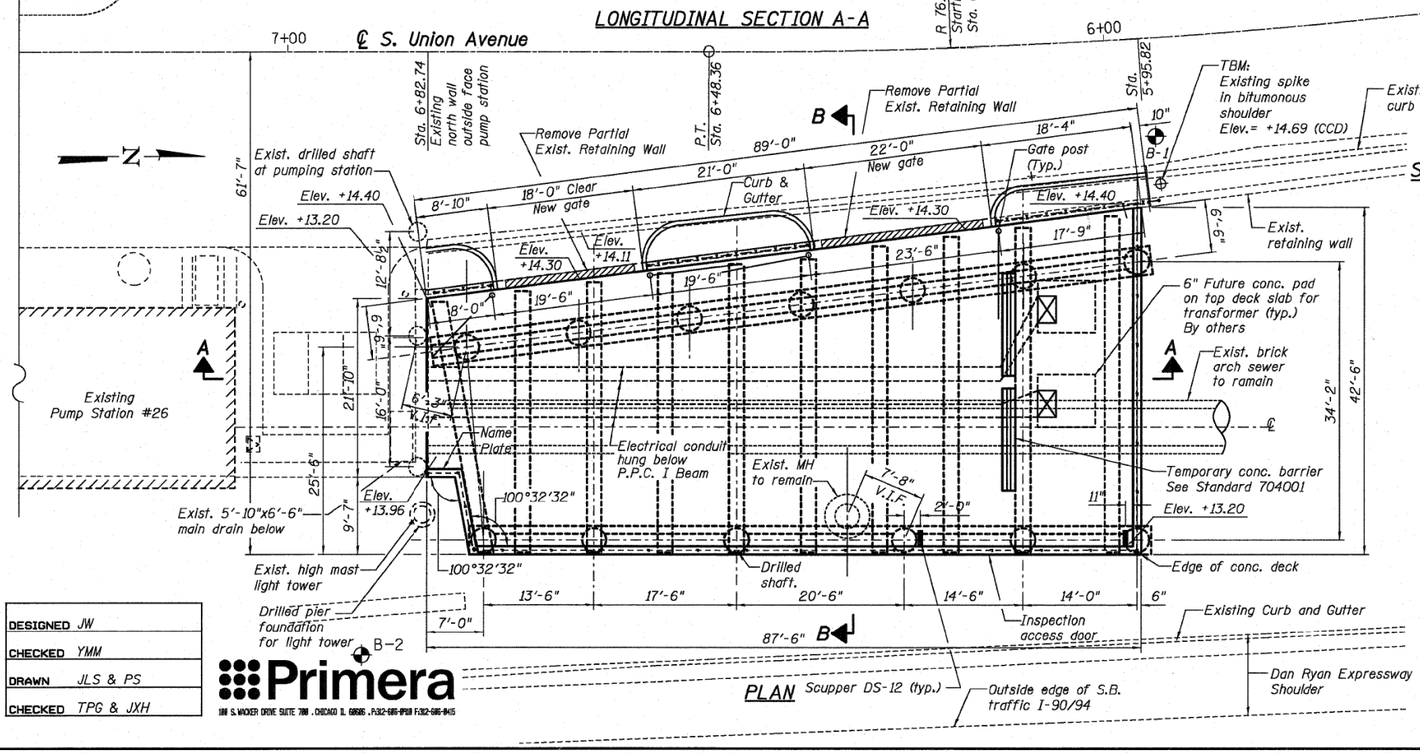

PLAN

DESIGNED	JW
CHECKED	YMM
DRAWN	JLS & PS
CHECKED	TPG & JXH

Primera
188 S. WACKER DRIVE SUITE 700 , CHICAGO IL 60606 , P:312-685-8900 F:312-685-8415

THEODORE P. GEORGAS 081-004609 REGISTERED STRUCTURAL ENGINEER STATE OF ILLINOIS

12-3-10
Theodore P. Georgas — Date
Licensed Structural Engineer
State of Illinois 081-4609
Expires 11/30/2010

APPROVED
FOR STRUCTURAL ADEQUACY ONLY
ENGINEER OF BRIDGES AND STRUCTURES

GENERAL PLAN

I-90/94 DAN RYAN PUMP STATION #26
ROOSEVELT ROAD AT S. UNION AVENUE
RETAINING WALL TRUCK PARKING AREA
STRUCTURE NUMBER 016-1308

SHEET NO. S1	F.A.I. RTE.	SECTION	COUNTY	TOTAL SHEETS	SHEET NO.
S19 SHEETS	90/94	2010-075-I	COOK	33	10
			CONTRACT NO. 60L61		
	DATE: 12-03-10	ILLINOIS	FED. AID PROJECT		

FILE PATH = pw:\\AECOM-NA-AWS\eacommonline.local\AECOM_DS02_NA\Documents\01 Americas\Transportation\60269938 Circle\Phase_II\000_CAD\006_Roadway\Sheets\62A77 Contracts\D162A77-SHT-EX-PS26-1999-02.dgn

AECOM
303 EAST WACKER DRIVE, SUITE 1400
CHICAGO, IL 60601-5276
PHONE: (312) 373-7700 FAX: (312) 373-6800

D162A77-SHT-EX-PS26-1999-02.dgn	DESIGNED -	REVISED -
USER NAME = ChiuA	DRAWN -	REVISED -
PLOT SCALE = 40.0000 ' / in.	CHECKED -	REVISED -
PLOT DATE = 1/29/2020	DATE - 1/29/2019	REVISED -

STATE OF ILLINOIS
DEPARTMENT OF TRANSPORTATION

EXISTING PUMP STATION #26 PLANS

SCALE: | SHEET 2 OF 6 SHEETS | STA. | TO STA.

F.A.I. RTE.	SECTION	COUNTY	TOTAL SHEETS	SHEET NO.
90/94/290	2015-018R	COOK	1360	593
		CONTRACT NO. 62A77		
	ILLINOIS	FED. AID PROJECT		

FOR INFORMATION ONLY

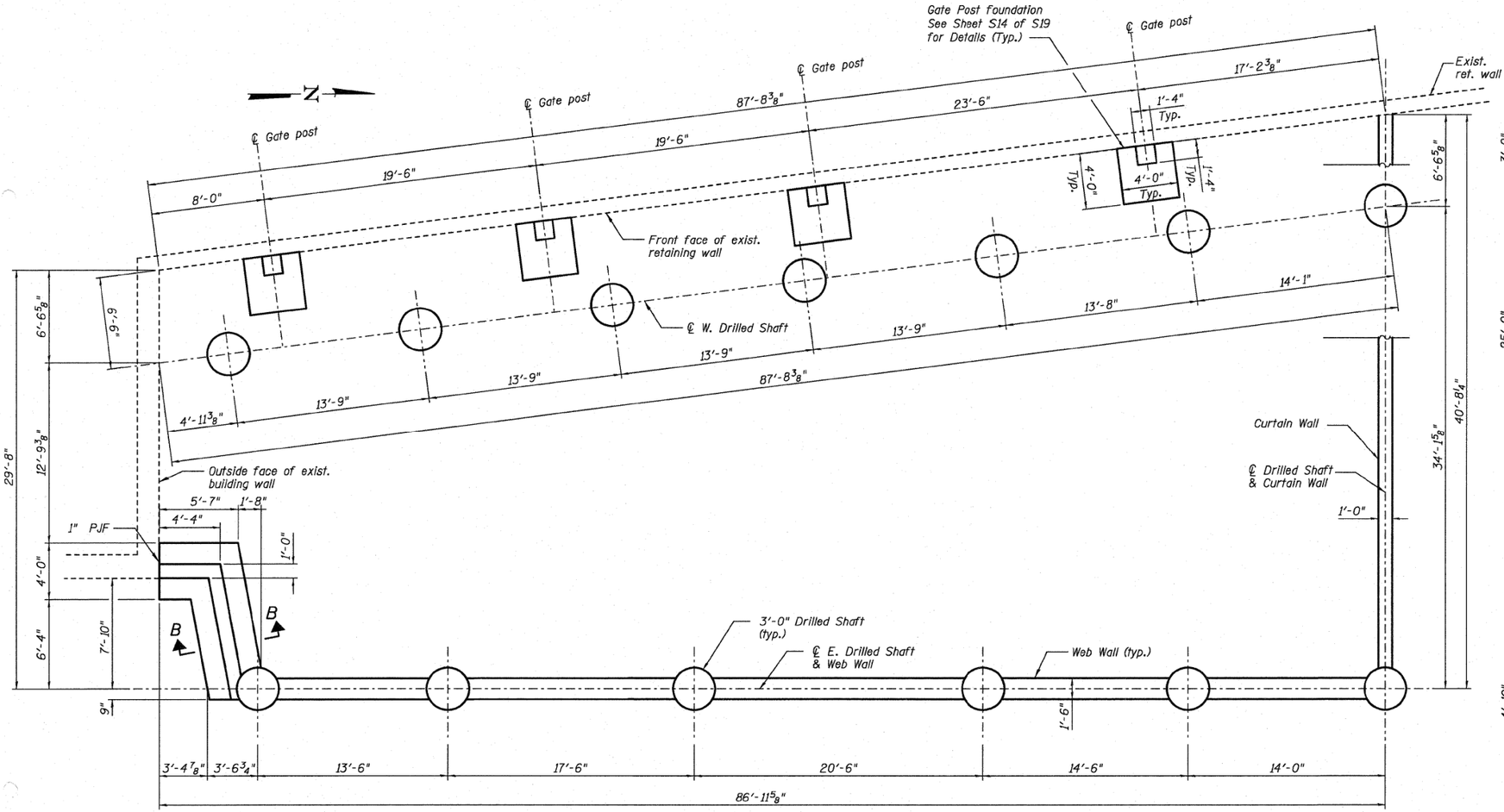

FOUNDATION PLAN

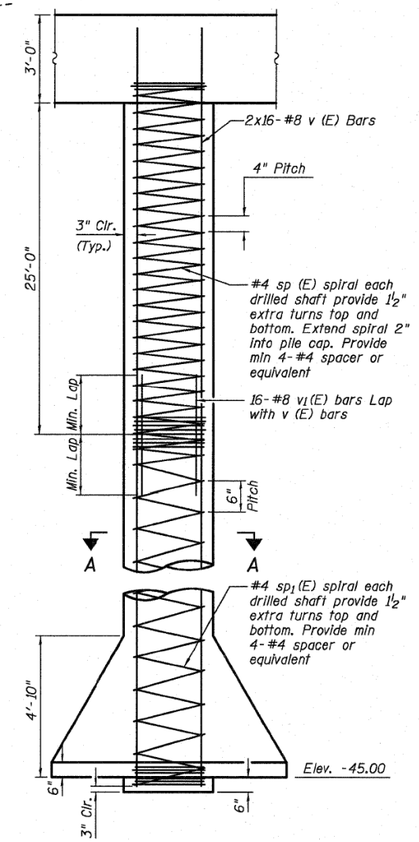

DRILLED SHAFT DETAIL

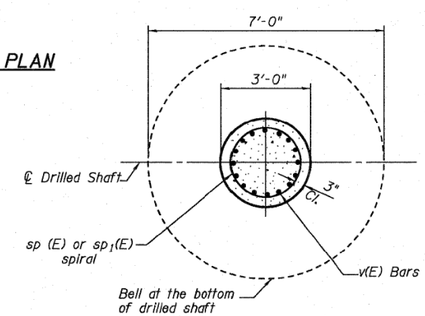

SECTION A-A

MIN. BAR LAP

#5 = 3'-3"
#6 = 3'-10"
#7 = 5'-2"
#8 = 6'-9"

Notes:

See Sheet S14 for Section B-B.

DESIGNED	JW
CHECKED	YMM
DRAWN	JLS & PS
CHECKED	TPG & JXH

Primera
188 S. WACKER DRIVE SUITE 700 . CHICAGO IL 60606 . P:312-686-0900 F:312-686-0415

FOUNDATION PLAN AND DETAILS
STRUCTURE NUMBER 016-1308

SHEET NO. S11	F.A.I. RTE.	SECTION	COUNTY	TOTAL SHEETS	SHEET NO.
S19 SHEETS	90/94	2010-075-I	COOK	33	20
			CONTRACT NO. 60L61		
	DATE: 12-03-10	ILLINOIS	FED. AID PROJECT		

FILE PATH = pw:\\AECOM-NA-AWS1.aecomonline.local:AECOM_DS02_NA\Documents\01 Americas\Transportation\60269938 Circle\Phase_II\000_CAD\006_Roadway\Sheets\62A77 Contracts\D162A77-SHT-EX-PS26-1999-03.dgn

AECOM
303 EAST WACKER DRIVE, SUITE 1400
CHICAGO, IL 60601-5276
PHONE: (312) 373-7700 FAX: (312) 373-6800

D162A77-SHT-EX-PS26-1999-03.dgn	DESIGNED -	REVISED -	
USER NAME = ChiuA	DRAWN -	REVISED -	
PLOT SCALE = 40.0000 ' / in.	CHECKED -	REVISED -	
PLOT DATE = 1/29/2020	DATE - 1/29/2019	REVISED -	

STATE OF ILLINOIS
DEPARTMENT OF TRANSPORTATION

EXISTING PUMP STATION #26 PLANS

SCALE: SHEET 3 OF 6 SHEETS STA. TO STA.

F.A.I. RTE.	SECTION	COUNTY	TOTAL SHEETS	SHEET NO.
90/94/290	2015-018R	COOK	1360	594
		CONTRACT NO. 62A77		
	ILLINOIS	FED. AID PROJECT		

FOR INFORMATION ONLY

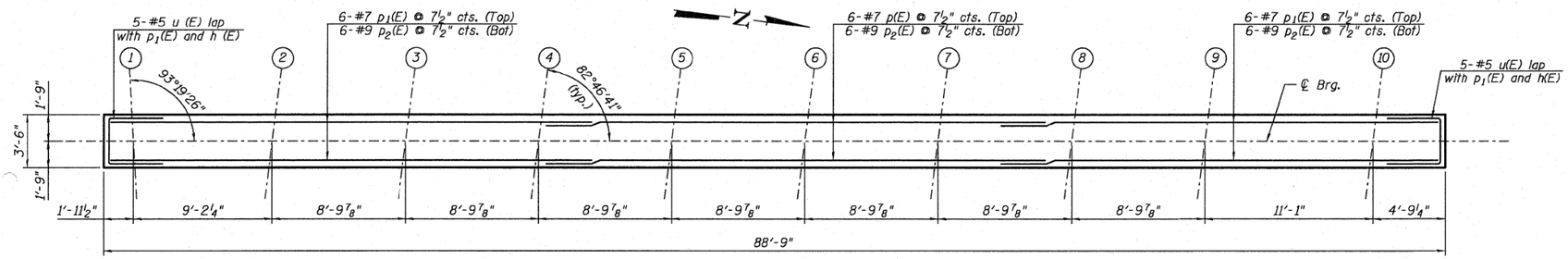

TOP PLAN

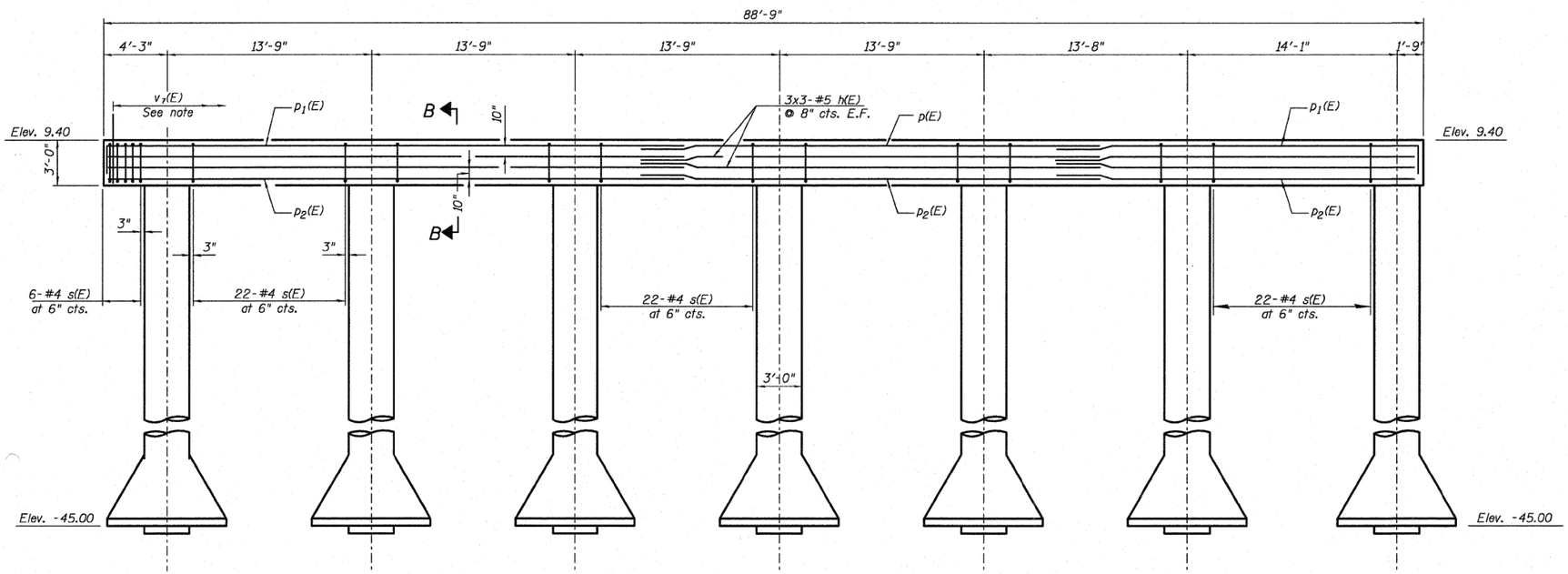

ELEVATION

WEST PIER BILL OF MATERIAL

Bar	No.	Size	Length	Shape
h(E)	18	#5	31'-8"	
p(E)	6	#7	33'-0"	
p1(E)	12	#7	35'-8"	
p2(E)	18	#9	35'-4"	
s(E)	138	#4	12'-4"	
* sp(E)	7	#5	26'-0"	
* sp1(E)	7	#5	28'-0"	
u(E)	10	#5	9'-2"	
v(E)	224	#8	31'-6"	
v1(E)	112	#8	14'-1"	
v7(E)	158	#5	5'-4"	
Concrete Structures			Cu. Yd.	34.5
Reinforcement Bars, Epoxy Coated			Pound	29,570
Drilled Shaft In Soil			Cu. Yd.	114.8

* Length is height of spiral

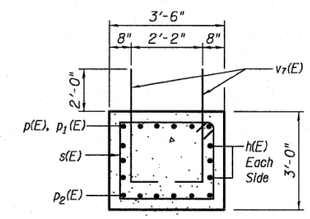

SECTION B-B

NOTES:

See Diaphragm elevations on Sheet S8 of S19 for location and spacing of $v_7(E)$.

See Sheet S11 for Drilled Shaft reinforcement details.

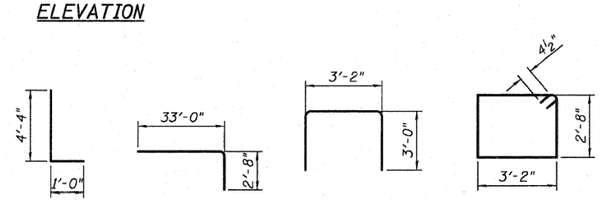

Bar v7(E) Bar p1(E) Bar u(E) Bar s(E)

MIN. BAR LAP

#5 = 3'-3"
#6 = 3'-10"
#7 = 5'-2"
#8 = 6'-9"

DESIGNED	JW
CHECKED	YMM
DRAWN	JLS & PS
CHECKED	TPG & JXH

Primera
189 S. WACKER DRIVE SUITE 700 , CHICAGO IL 60606 , P:312-686-9900 F:312-686-9905

WEST PIER DETAILS
STRUCTURE NUMBER 016-1308

SHEET NO. S12	F.A.I. RTE.	SECTION	COUNTY	TOTAL SHEETS	SHEET NO.
S19 SHEETS	90/94	2010-075-I	COOK	33	21
			CONTRACT NO. 60L61		
	DATE: 12-03-10	ILLINOIS	FED. AID PROJECT		

FILE PATH = pw:\\AECOM-NA-AWSieecomonline.local:AECOM_DS02_NA\Documents\01 Americas\Transportation\60269938 Circle\Phase_II\000_CAD\006_Roadway\Sheets\62A77 Contracts\D162A77-SHT-EX-PS26-1999-04.dgn

AECOM
303 EAST WACKER DRIVE, SUITE 1400
CHICAGO, IL 60601-5276
PHONE: (312) 373-7700 FAX: (312) 373-6800

D162A77-SHT-EX-PS26-1999-04.dgn	DESIGNED -	REVISED -
USER NAME = ChiuA	DRAWN -	REVISED -
PLOT SCALE = 40.0000 ' / in.	CHECKED -	REVISED -
PLOT DATE = 1/29/2020	DATE - 1/29/2019	REVISED -

STATE OF ILLINOIS
DEPARTMENT OF TRANSPORTATION

EXISTING PUMP STATION #26 PLANS

SCALE: SHEET 4 OF 6 SHEETS STA. TO STA.

F.A.I. RTE.	SECTION	COUNTY	TOTAL SHEETS	SHEET NO.
90/94/290	2015-018R	COOK	1360	595
		CONTRACT NO. 62A77		
	ILLINOIS	FED. AID PROJECT		

FOR INFORMATION ONLY

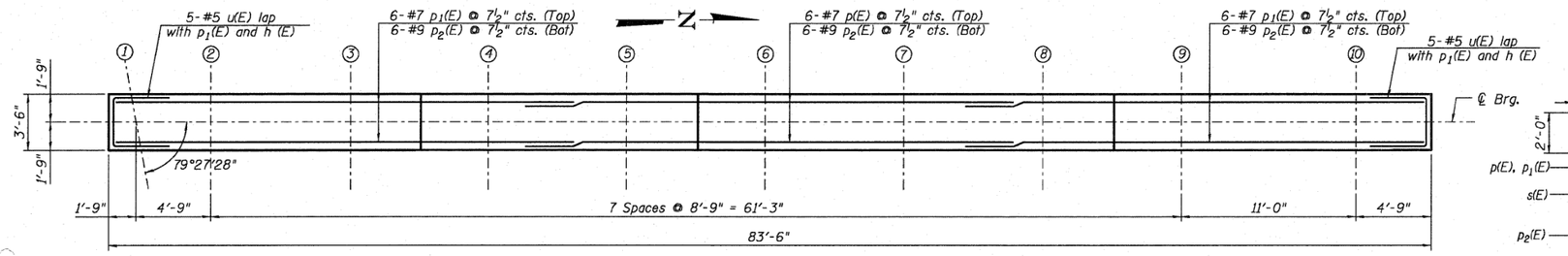

TOP PLAN

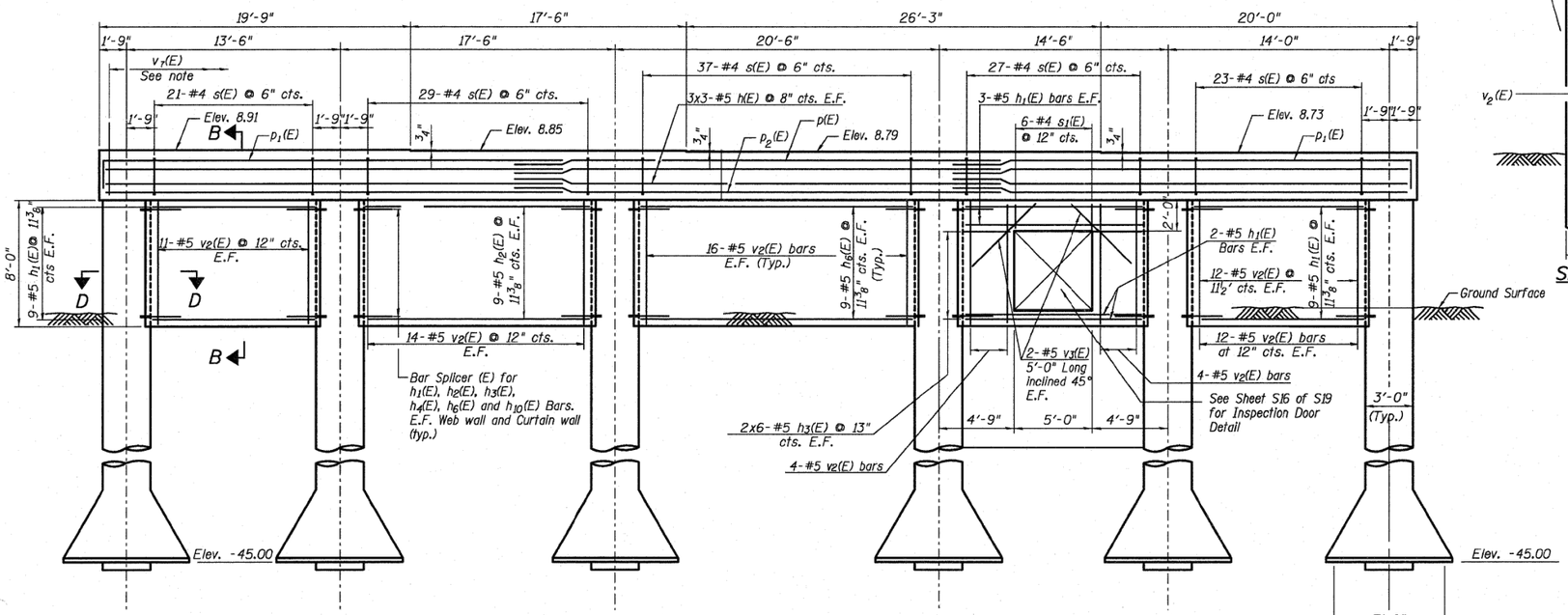

ELEVATION

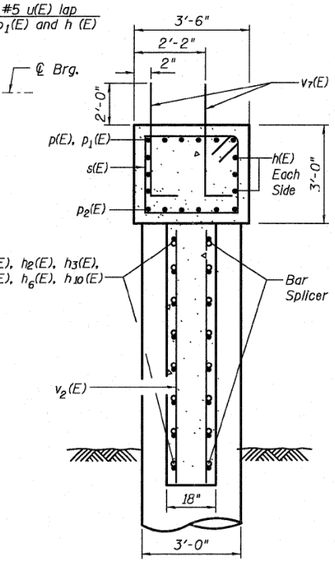

SECTION B-B

EAST PIER BILL OF MATERIAL

Bar	No.	Size	Length	Shape
h(E)	18	#5	31'-8"	
h1(E)	46	#5	10'-6"	
h2(E)	18	#5	14'-0"	
h3(E)	24	#5	3'-0"	
h6(E)	18	#5	17'-6"	
p(E)	6	#7	33'-0"	
p1(E)	12	#7	35'-8"	
p2(E)	18	#9	35'-4"	
s(E)	137	#4	12'-4"	
s1(E)	6	#4	6'-7"	
* sp(E)	6	#5	26'-0"	
* sp1(E)	6	#5	28'-0"	
u(E)	10	#5	9'-2"	
v(E)	192	#8	31'-6"	
v1(E)	96	#8	14'-0"	
v2(E)	122	#5	7'-8"	
v3(E)	4	#5	5'-0"	
v7(E)	148	#5	5'-4"	
Concrete Structures			Cu. Yd.	69.1
Reinforcement Bars, Epoxy Coated			Pound	28,360
Bar Splicers			Each	180
Drilled Shaft In Soil			Cu. Yd.	88.0

* Length is height of spiral

NOTES:

See Diaphragm elevations on Sheet S8 of S19 for location and spacing of $v_7(E)$.

See Sheet S11 for Drilled Shaft reinforcement details.

See Sheet S12 for Bars v7(E), p1(E), u(E) and s(E) details.

See Sheet S14 for additional Bar Splicers in Drilled Shafts for Curtain Walls.

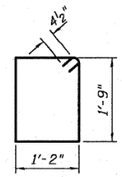

Bar s1(E)

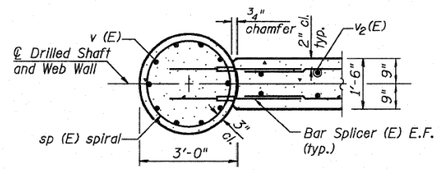

SECTION D-D

MIN. BAR LAP

#5 = 3'-3"
#6 = 3'-10"
#7 = 5'-2"
#8 = 6'-9"

EAST PIER DETAILS
STRUCTURE NUMBER 016-1308

SHEET NO. S13	F.A.I. RTE.	SECTION	COUNTY	TOTAL SHEETS	SHEET NO.
	90/94	2010-075-I	COOK	33	22
S19 SHEETS			CONTRACT NO. 60L61		
	DATE: 12-03-10		ILLINOIS	FED. AID PROJECT	

DESIGNED	JW
CHECKED	YMM
DRAWN	JLS & PS
CHECKED	TPG & JXH

Primera
1111 S. WACKER DRIVE SUITE 700 . CHICAGO IL 60606 . P:312-686-4900 F:312-686-4415

FILE PATH = pw:\\AECOM-NA-AWS\eecomonline.local\AECOM_DS02_NA\Documents\01 Americas\Transportation\60269938 Circle\Phase_II\000_CAD\006_Roadway\Sheets\62A77 Contracts\D162A77-SHT-EX-PS26-1999-05.dgn

AECOM
303 EAST WACKER DRIVE, SUITE 1400
CHICAGO, IL 60601-5276
PHONE: (312) 373-7700 FAX: (312) 373-6800

D162A77-SHT-EX-PS26-1999-05.dgn	DESIGNED -	REVISED -	
USER NAME = ChiuA	DRAWN -	REVISED -	
PLOT SCALE = 40.0000 ' / in.	CHECKED -	REVISED -	
PLOT DATE = 1/29/2020	DATE - 1/29/2019	REVISED -	

STATE OF ILLINOIS
DEPARTMENT OF TRANSPORTATION

EXISTING PUMP STATION #26 PLANS

SCALE: | SHEET 5 OF 6 SHEETS | STA. TO STA.

F.A.I. RTE.	SECTION	COUNTY	TOTAL SHEETS	SHEET NO.
90/94/290	2015-018R	COOK	1360	596
		CONTRACT NO. 62A77		
	ILLINOIS	FED. AID PROJECT		

FOR INFORMATION ONLY

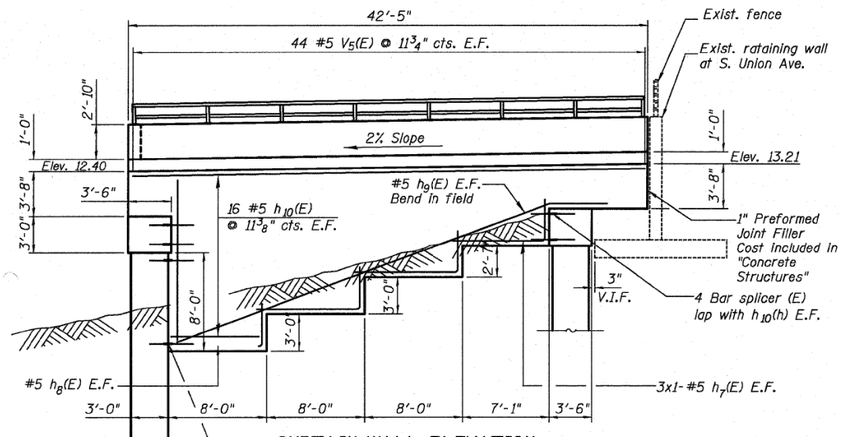

CURTAIN WALL ELEVATION

Note: Order h_{10}(E), v_5(E) bars in full length. Cut bars in field to fit the wall shape.

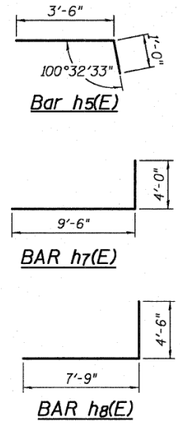

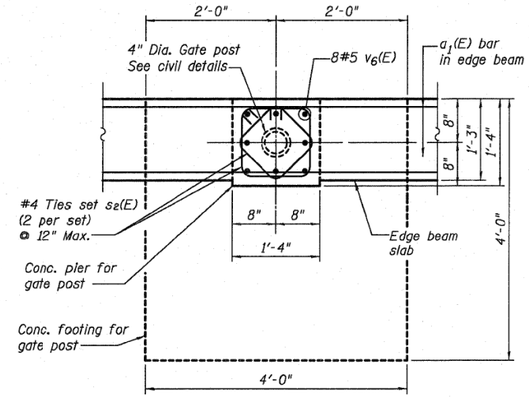

SECTION A-A

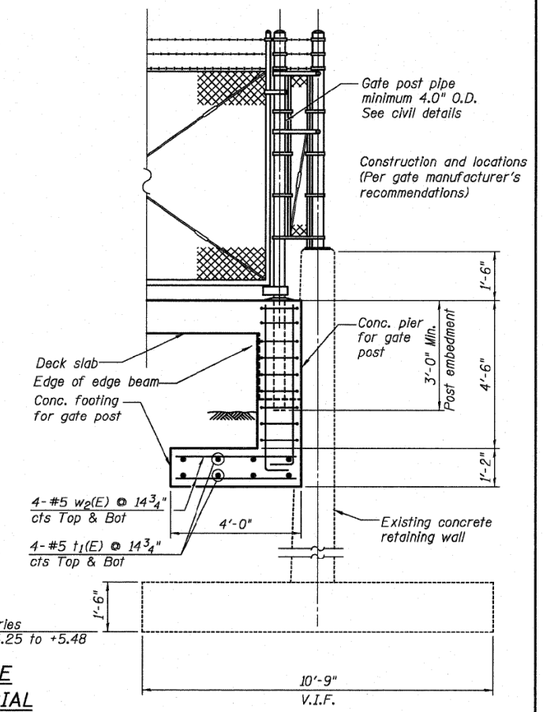

TYPICAL GATE POST AT ENTRANCE

(See civil drawings for gate details)

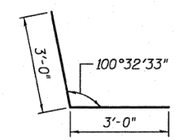

BAR h_{11}(E)

SUBSTRUCTURE BILL OF MATERIAL

Bar	No.	Size	Length	Shape
h_4(E)	34	#5	8'-0"	
h_5(E)	34	#5	4'-6"	
h_7(E)	6	#5	13'-6"	
h_8(E)	2	#5	12'-3'	
h_9(E)	2	#5	39'-6'	
h_{10} (E)	32	#5	42'-3"	
h_{11} (E)	8	#5	6'-0"	
h_{12} (E)	8	#5	7'-0"	
h_{13} (E)	8	#5	6'-0"	
n (E)	24	#5	5'-0"	
t (E)	11	#5	3'-6"	
t_1(E)	32	#5	3'-8"	
s_2(E)	48	#4	4'-9"	
v_4(E)	24	#5	18'-10"	
v_5(E)	88	#5	14'-2"	
v_6(E)	32	#5	6'-10"	
v_7(E)	16	#5	5'-4"	
w(E)	4	#5	9'-0"	
w_1 (E)	4	#5	4'-0"	
w_2(E)	32	#5	3'-8"	
Concrete Structures			Cu. Yd.	26.2
Reinforcement Bars, Epoxy Coated			Pound	4910
Bar Splicers			Each	51

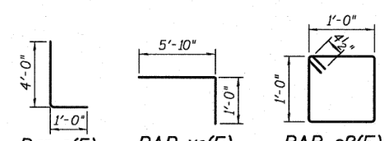

Bar n(E) BAR v_6(E) BAR s2(E)

Note:

See Sheet S11 for location of Section B-B.

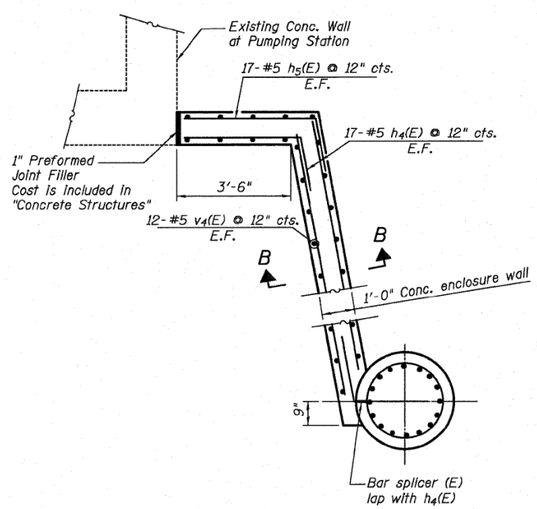

ENCLOSURE WALL CONNECTED TO DRILLED SHAFT

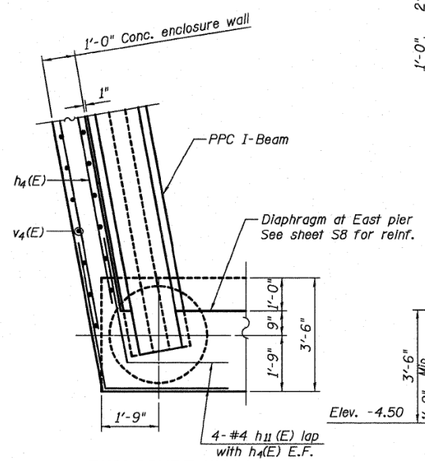

ENCLOSURE WALL CONNECTED TO DIAPHRAGM WALL

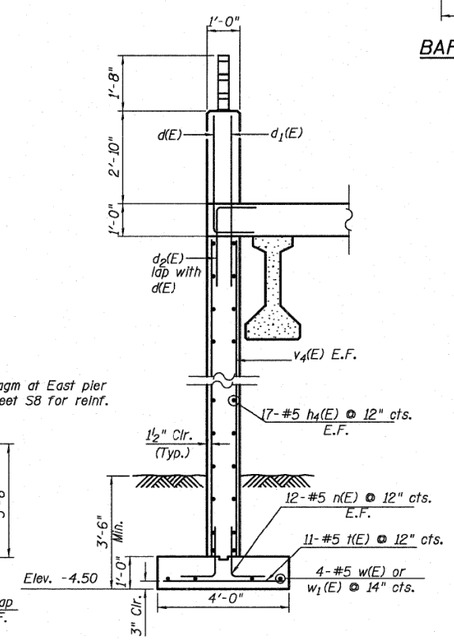

SECTION B-B

SUBSTRUCTURE DETAILS
STRUCTURE NUMBER 016-1308

DESIGNED	JW
CHECKED	YMM
DRAWN	JLS & PS
CHECKED	TPG & JXH

Primera
188 S. WACKER DRIVE SUITE 700 . CHICAGO IL 60606 . P:312-686-9960 F:312-686-9435

SHEET NO. S14	F.A.I. RTE.	SECTION	COUNTY	TOTAL SHEETS	SHEET NO.
	90/94	2010-075-I	COOK	33	23
S19 SHEETS			CONTRACT NO. 60L61		
	DATE: 12-03-10	ILLINOIS	FED. AID PROJECT		

AECOM
303 EAST WACKER DRIVE, SUITE 1400
CHICAGO, IL 60601-5276
PHONE: (312) 373-7700 FAX: (312) 373-6800

D162A77-SHT-EX-PS26-1999-06.dgn	DESIGNED -	REVISED -	
USER NAME = ChiuA	DRAWN -	REVISED -	
PLOT SCALE = 40.0000 ' / in.	CHECKED -	REVISED -	
PLOT DATE = 1/29/2020	DATE - 1/29/2019	REVISED -	

STATE OF ILLINOIS
DEPARTMENT OF TRANSPORTATION

EXISTING PUMP STATION #26 PLANS

SCALE: SHEET 6 OF 6 SHEETS STA. TO STA.

F.A.I. RTE.	SECTION	COUNTY	TOTAL SHEETS	SHEET NO.
90/94/290	2015-018R	COOK	1360	597
		CONTRACT NO. 62A77		
	ILLINOIS	FED. AID PROJECT		

FILE PATH = pw:\\AECOM-NA-AWS1.aecomonline.local:AECOM_DS02_NA\Documents\01 Americas\Transportation\60269938 Circle\Phase_II\000_CAD\006_Roadway\Sheets\62A77 Contracts\D162A77-SHT-EX-PS26-1999-06.dgn

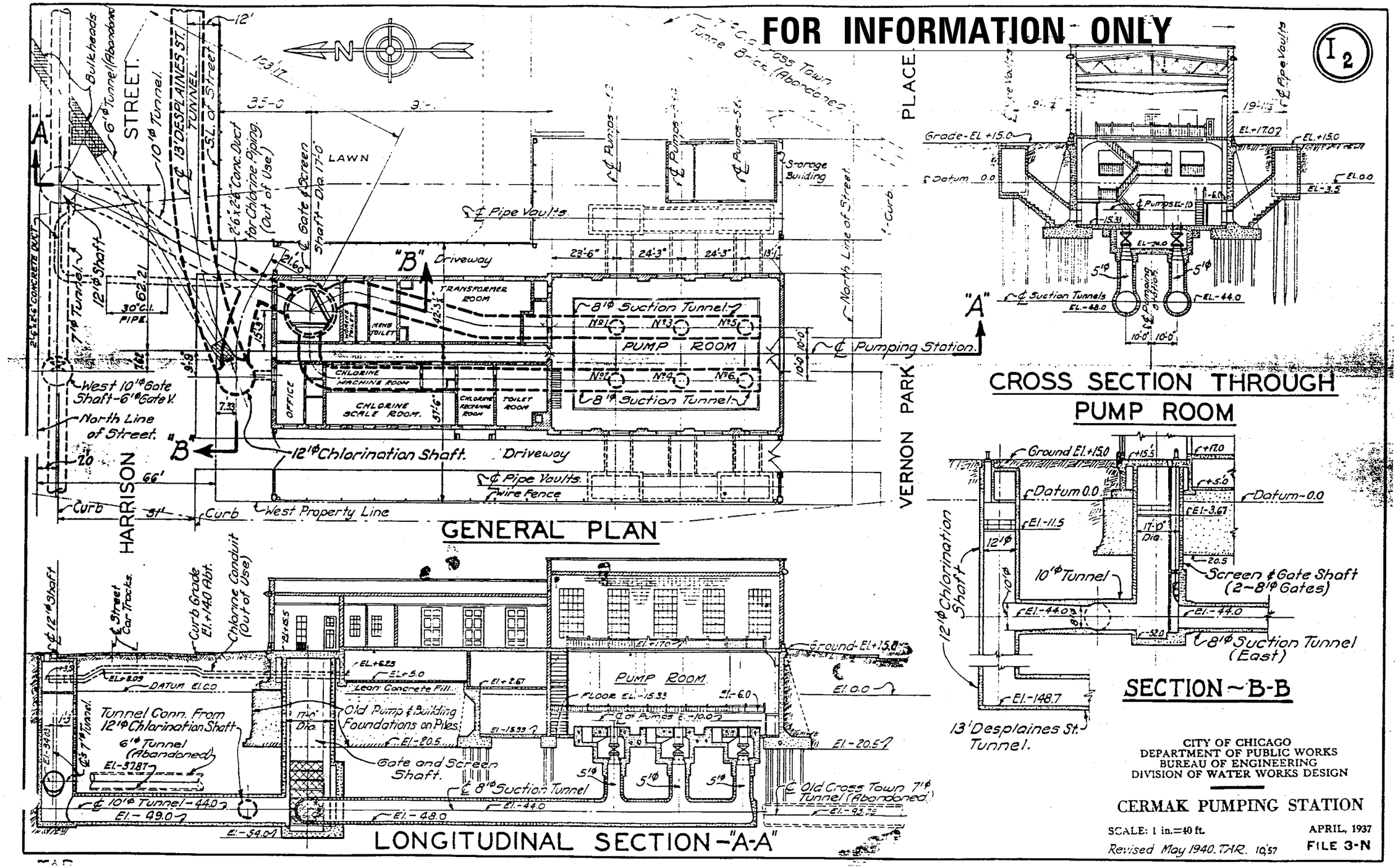
FOR INFORMATION ONLY

CITY OF CHICAGO
DEPARTMENT OF PUBLIC WORKS
BUREAU OF ENGINEERING
DIVISION OF WATER WORKS DESIGN

CERMAK PUMPING STATION

SCALE: 1 in.=40 ft. APRIL, 1937

Revised May 1940. TAR. 10/57 FILE 3-N

AECOM 303 EAST WACKER DRIVE, SUITE 1400 CHICAGO, IL 60601-5276 PHONE: (312) 373-7700 FAX: (312) 373-6800	D162A77-SHT-EX-ABANDONWATERTUNNEL-00.dgn	DESIGNED -	REVISED -	STATE OF ILLINOIS DEPARTMENT OF TRANSPORTATION	EXISTING WATER TUNNEL PLANS	F.A.I. RTE. 90/94/290	SECTION 2015-018R	COUNTY COOK	TOTAL SHEETS 1360 / SHEET NO. 598
	USER NAME = ChiuA	DRAWN -	REVISED -					CONTRACT NO. 62A77	
	PLOT SCALE = 40.0000 ' / in.	CHECKED -	REVISED -		SCALE: SHEET 1 OF 3 SHEETS STA. TO STA.				
	PLOT DATE = 1/29/2020	DATE - 1/29/2019	REVISED -				ILLINOIS FED. AID PROJECT		

FILE PATH = pw:\\AECOM-NA-AWS1.aecomonline.local:AECOM.DS02.NA\Documents\01 Americas\Transportation\60269938 Circle\Phase.II\000.CAD\006.Roadway\Sheets\62A77 Contract\D162A77-SHT-EX-ABANDONWATERTUNNEL-00.dgn

FOR INFORMATION ONLY

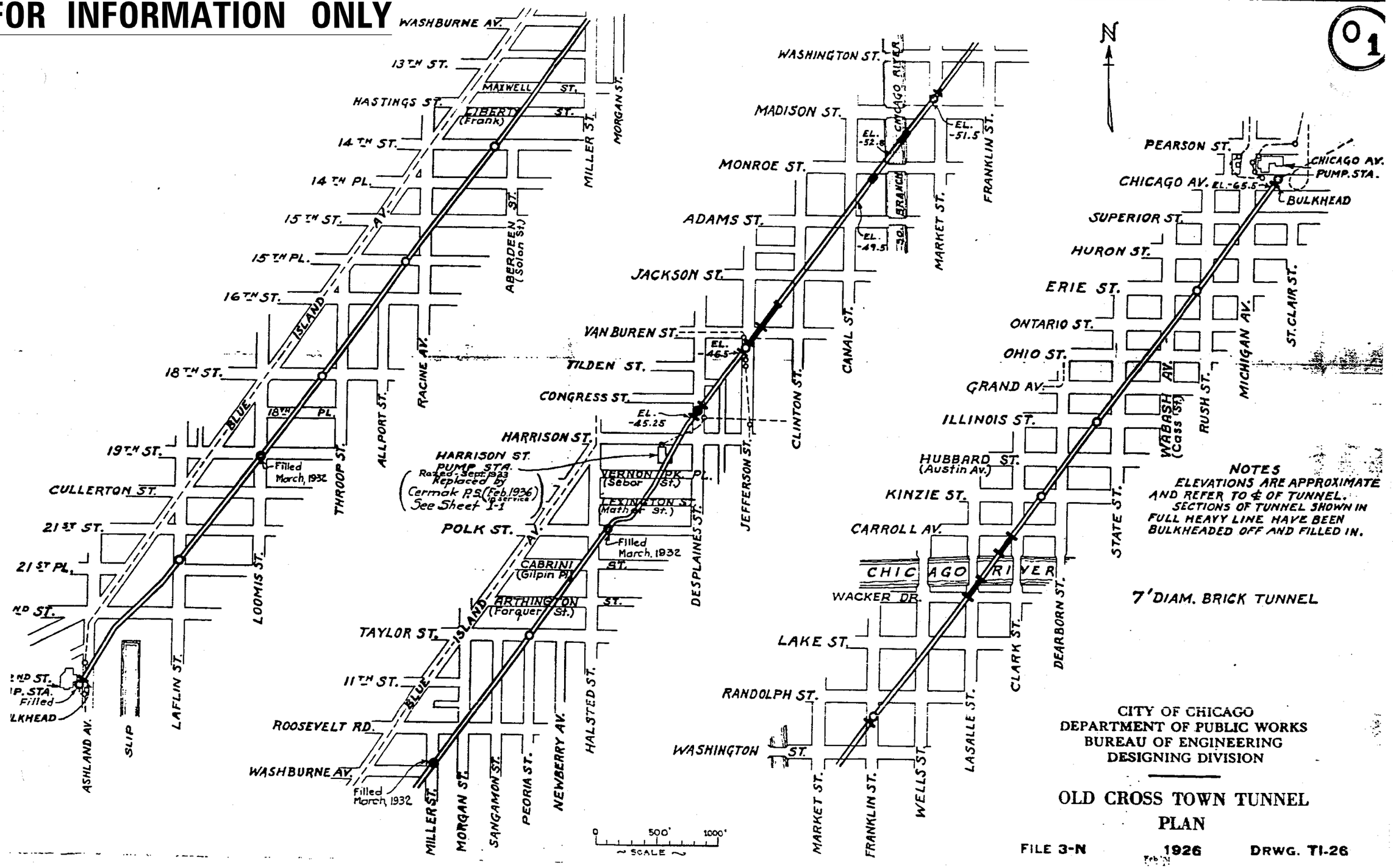
WASHBURNE AV.
13TH ST.
MAXWELL ST.
HASTINGS ST.
LIBERTY ST. (Frank)
14TH ST.
14TH PL.
15TH ST.
15TH PL.
16TH ST.
18TH ST.
18TH PL.
19TH ST.
CULLERTON ST.
21ST ST.
21ST PL.
ND ST.
ND ST.
P. STA.
Filled
LKHEAD
ASHLAND AV.
SLIP
LAFLIN ST.
LOOMIS ST.
THROOP ST.
ALLPORT ST.
RACINE AV.
ABERDEEN ST. (Solon St.)
MILLER ST.
MORGAN ST.
BLUE ISLAND AV.
Filled March, 1932
WASHINGTON ST.
MADISON ST.
MONROE ST.
ADAMS ST.
JACKSON ST.
VAN BUREN ST.
TILDEN ST.
CONGRESS ST.
HARRISON ST.
HARRISON ST. PUMP STA. Razed Sept. 1923 Replaced by Cermak P.S. (Feb. 1936) See Sheet 1-1
POLK ST.
CABRINI (Gilpin Pl.)
ARTHINGTON ST. (Forquer St.)
TAYLOR ST.
11TH ST.
ROOSEVELT RD.
WASHBURNE AV.
Filled March, 1932
MILLER ST.
MORGAN ST.
SANGAMON ST.
PEORIA ST.
NEWBERRY AV.
HALSTED ST.
DESPLAINES ST.
JEFFERSON ST.
CLINTON ST.
CANAL ST.
MARKET ST.
FRANKLIN ST.
CHICAGO RIVER
BRANCH
EL. -52.8
EL. -51.5
EL. -49.5
EL. -46.5
EL. -45.25
VERNON PK. PL. (Sebor St.)
LEXINGTON ST. (Mathias St.)
Filled March, 1932
ST.
ST.
ST.

FOR INFORMATION ONLY

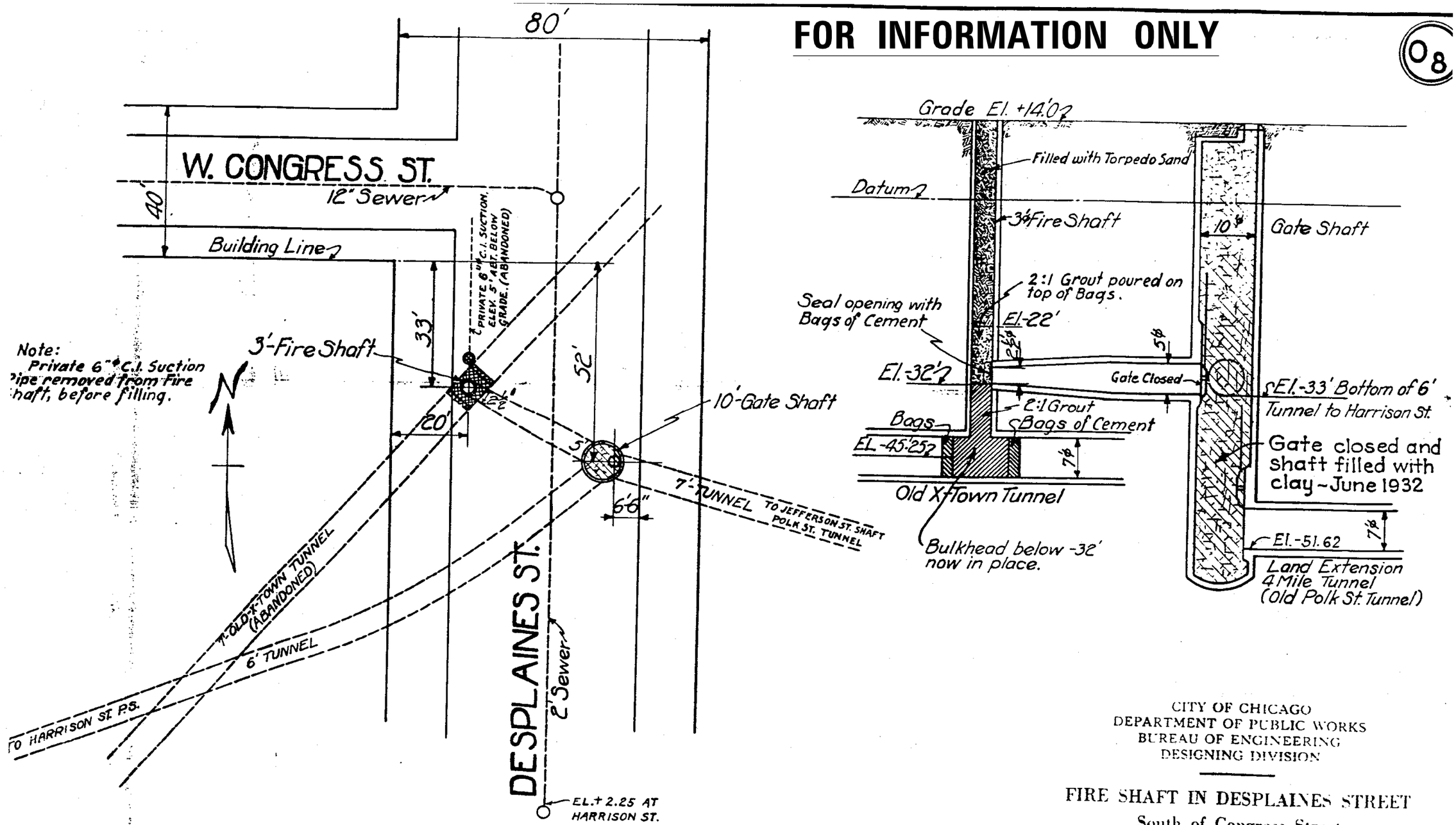

CITY OF CHICAGO
DEPARTMENT OF PUBLIC WORKS
BUREAU OF ENGINEERING
DESIGNING DIVISION

FIRE SHAFT IN DESPLAINES STREET
South of Congress Street
Scales: 1 in. = 20 ft. and 30 ft.

1925
5-47

FILE 3-N DRWG. NO. TI-9

FILE PATH = pw:\\AECOM-NA-AWS1.aecomonline.local:AECOM_DS02_NA\Documents\01 Americas\Transportation\60269938 Circle\Phase II\000.CAD\006.Roadway\Sheets\62A77 Contracts\D162A77-SHT-EX-ABANDONWATERTUNNEL-02.dgn

AECOM
303 EAST WACKER DRIVE, SUITE 1400
CHICAGO, IL 60601-5276
PHONE: (312) 373-7700 FAX: (312) 373-6800

D162A77-SHT-EX-ABANDONWATERTUNNEL-02.dgn	DESIGNED -	REVISED -
USER NAME = ChuA	DRAWN -	REVISED -
PLOT SCALE = 40.0000 ' / in.	CHECKED -	REVISED -
PLOT DATE = 1/29/2020	DATE - 1/29/2019	REVISED -

STATE OF ILLINOIS
DEPARTMENT OF TRANSPORTATION

EXISTING WATER TUNNEL PLANS

SCALE: SHEET 3 OF 3 SHEETS STA. TO STA.

F.A.I. RTE.	SECTION	COUNTY	TOTAL SHEETS	SHEET NO.
90/94/290	2015-018R	COOK	1360	599
		CONTRACT NO. 62A77		
		ILLINOIS FED. AID PROJECT		

FOR INFORMATION ONLY

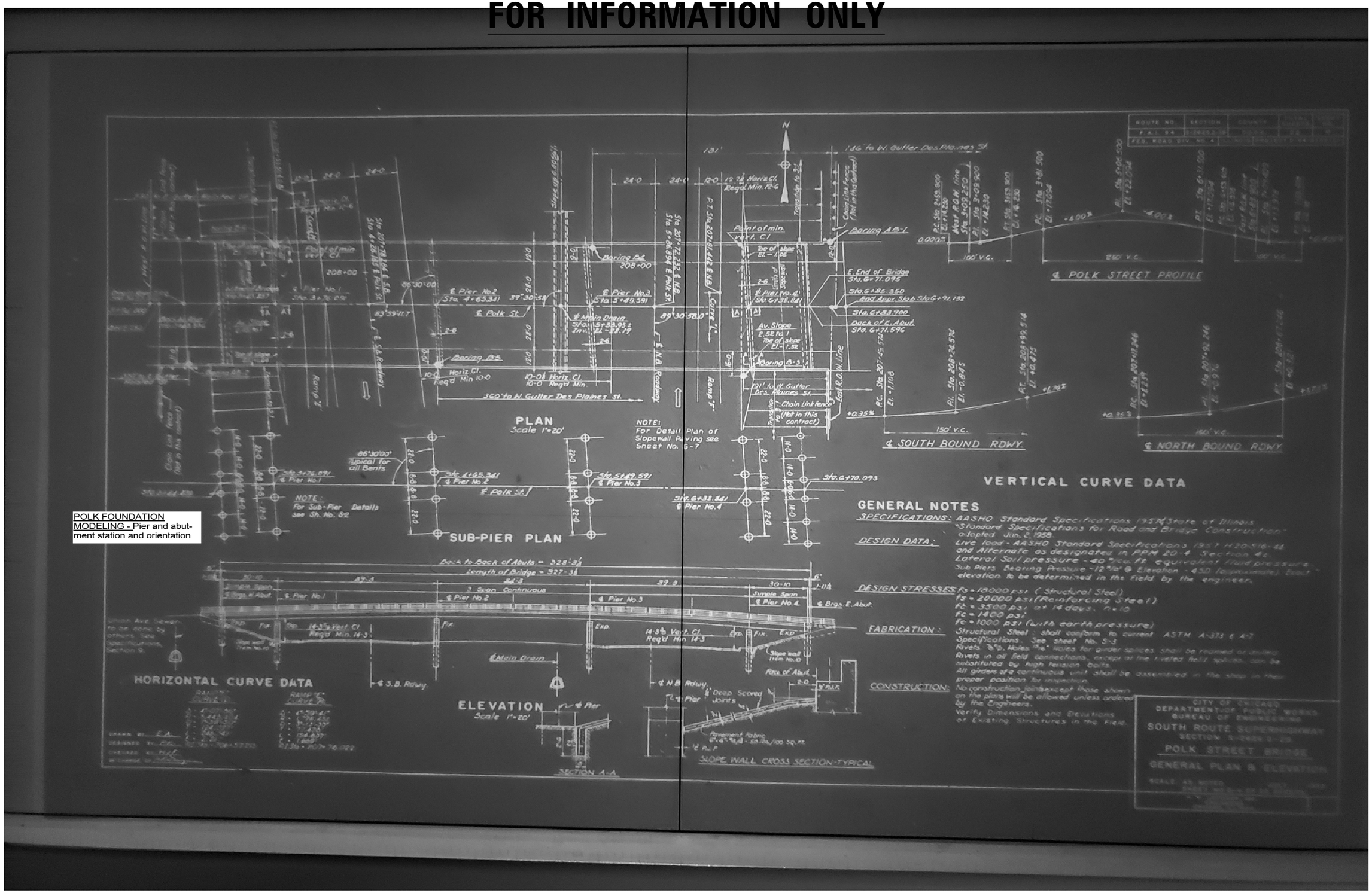

POLK FOUNDATION MODELING - Pier and abutment station and orientation

FILE PATH = pw:\\AECOM-NA-AWS1.aecomonline.local:AECOM_DS02_NA\Documents\01 Americas\Transportation\60269938 Circle\Phase II\000_CAD\006_Roadway\Sheets\62A77 Contracts\D162A77-SHT-EX-POLK-01.dgn

AECOM
303 EAST WACKER DRIVE, SUITE 1400
CHICAGO, IL 60601-5276
PHONE: (312) 373-7700 FAX: (312) 373-6800

D162A77-SHT-EX-POLK-01.dgn	DESIGNED -	REVISED -
USER NAME = ChiuA	DRAWN -	REVISED -
PLOT SCALE = 40.0000 ' / in.	CHECKED -	REVISED -
PLOT DATE = 1/29/2020	DATE - 1/29/2019	REVISED -

STATE OF ILLINOIS
DEPARTMENT OF TRANSPORTATION

EXISTING POLK STREET BRIDGE FOUNDATIONS

SCALE: | SHEET 1 OF 3 SHEETS | STA. TO STA.

F.A.I. RTE.	SECTION	COUNTY	TOTAL SHEETS	SHEET NO.
90/94/290	2015-018R	COOK	1360	599A

CONTRACT NO. 62A77

ILLINOIS FED. AID PROJECT

FOR INFORMATION ONLY

FILE PATH = pw:\\AECOM-NA-AWS\aecomonline.local\AECOM_DS02_NA\Documents\01 Americas\Transportation\60269938 Circle\Phase II\000 CAD\006 Roadway\Sheets\62A77 Contracts\D162A77-SHT-EX-POLK-02.dgn

AECOM
303 EAST WACKER DRIVE, SUITE 1400
CHICAGO, IL 60601-5276
PHONE: (312) 373-7700 FAX: (312) 373-6800

D162A77-SHT-EX-POLK-02.dgn	DESIGNED -	REVISED -	
USER NAME = ChiuA	DRAWN -	REVISED -	
PLOT SCALE = 40.0000 ' / in.	CHECKED -	REVISED -	
PLOT DATE = 1/29/2020	DATE - 1/29/2019	REVISED -	

STATE OF ILLINOIS
DEPARTMENT OF TRANSPORTATION

EXISTING POLK STREET BRIDGE FOUNDATIONS

SCALE: | SHEET 2 OF 3 SHEETS | STA. TO STA.

F.A.I. RTE.	SECTION	COUNTY	TOTAL SHEETS	SHEET NO.
90/94/290	2015-018R	COOK	1360	599B
		CONTRACT NO. 62A77		
		ILLINOIS FED. AID PROJECT		

FOR INFORMATION ONLY

	SECTION	COUNTY		
90/94	*	COOK	81	13
STA. —		TO STA. —		
FED. RD. DIST. NO.	ILLINOIS	FED. AID PROJECT		

* 2626.2-28-DM & 0101.6 IP-R(85)
0101.6-IP-R(85)

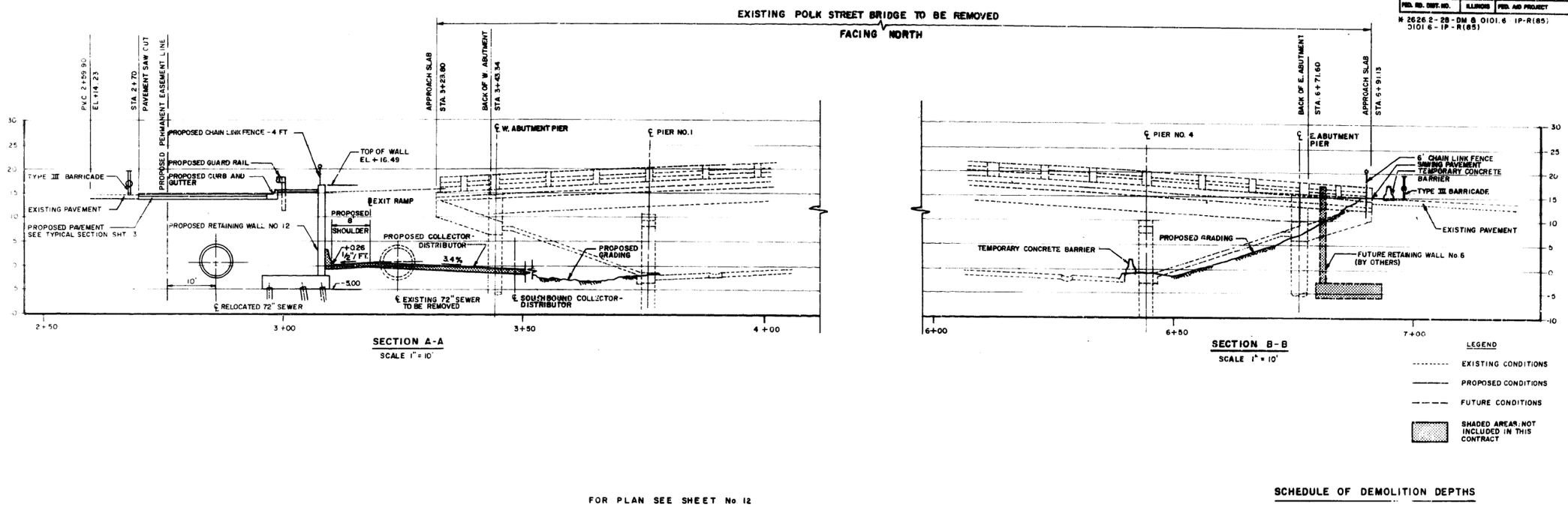

FOR PLAN SEE SHEET No. 12

SCHEDULE OF DEMOLITION DEPTHS

EAST & WEST ABUTMENT PIERS	EL. -5.00
PIER NO. 1	EL. -5.40
PIER NO. 2 (NOT SHOWN)	EL. -4.17
PIER NO. 3 (NOT SHOWN)	EL. -4.13
PIER NO. 4	EL. -5.48

STATE OF ILLINOIS
DEPARTMENT OF TRANSPORTATION
F.A.I. [illegible]
POLK STREET BRIDGE DEMOLITION AND RETAINING WALLS NOS. 8, 11 AND 12
POLK ST. SECTIONS
[illegible] NOTED
[illegible]
[illegible]
Chicago, Illinois

FILE PATH = pw:\\AECOM-NA-AWS1.aecomonline.local:AECOM.DS02.NA\Documents\01 Americas\Transportation\60269938 Circle\Phase_II\000_CAD\006_Roadway\Sheets\62A77 Contract\D162A77-SHT-EX-POLK-03.dgn

AECOM
303 EAST WACKER DRIVE, SUITE 1400
CHICAGO, IL 60601-5276
PHONE: (312) 373-7700 FAX: (312) 373-6800

D162A77-SHT-EX-POLK-03.dgn	DESIGNED -	REVISED -	
USER NAME = ChiuA	DRAWN -	REVISED -	
PLOT SCALE = 40.0000 ' / in.	CHECKED -	REVISED -	
PLOT DATE = 1/29/2020	DATE - 1/29/2019	REVISED -	

STATE OF ILLINOIS
DEPARTMENT OF TRANSPORTATION

EXISTING POLK STREET BRIDGE FOUNDATIONS

SCALE: | SHEET 3 OF 3 SHEETS | STA. TO STA.

F.A.I. RTE.	SECTION	COUNTY	TOTAL SHEETS	SHEET NO.
90/94/290	2015-018R	COOK	1360	599C
		CONTRACT NO. 62A77		
		ILLINOIS FED. AID PROJECT		

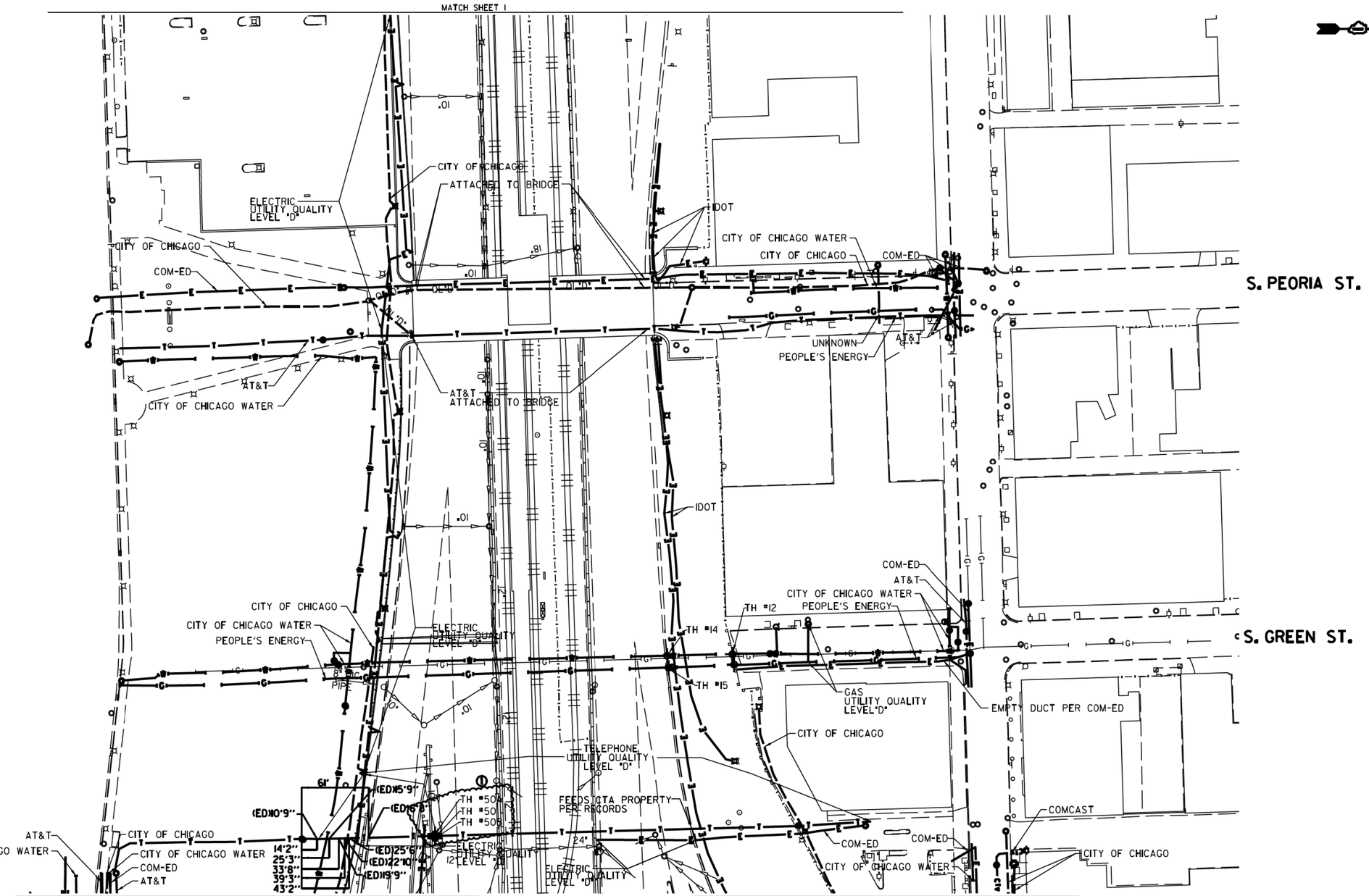

AERIAL
UNKNOWN
CABLE TV
TELEPHONE
GAS
ELECTRIC
TRAFFIC SIGNAL/LIGHTING
WATER
SANITARY SEWER
FIBER OPTIC
TBE TEST HOLE
END OF INFORMATION

UTILITY OWNERS

AT&T = TELEPHONE
COMCAST= CABLE TV
COM-ED = ELECTRIC
CITY OF CHICAGO = ELECTRIC
CITY OF CHICAGO WATER = WATER
IDOT = ELECTRIC
PEOPLE'S ENERGY = GAS

NOTE: ALL ELECTRONIC DEPTHS MARKED AS (ED) WERE OBTAINED UTILIZING A SONDE DEVICE. DEPTHS ON THE AT&T DUCT WERE RECORDED FROM AN AT&T CONTRACTOR. DEPTHS ON THE COMED DUCT WERE RECORDED BY A CARDNO CREW. CARDNO CAN NOT VERIFY THE ACCURACY OF THESE DEPTHS AND SHOULD BE USED AS APPROXIMATE AND AS INFORMATION ONLY.

UTILITIES SHOWN ON THESE PLANS AS DEPICTED IN THE LEGEND HAVE BEEN INVESTIGATED BY CARDNO IN ACCORDANCE WITH SUE INDUSTRY STANDARDS. ALL OTHER INFORMATION SHOWN HAS BEEN PROVIDED TO CARDNO BY OTHERS. CARDNO SUE FIELD INVESTIGATION WAS PERFORMED 3/14/13 THROUGH 7/25/14. CHANGES TO UTILITIES MAY HAVE BEEN MADE AND THEREFORE MAY RESULT IN VARIANCES FROM THIS PLAN. CONSIDERATION SHOULD BE GIVEN TO UPDATING THIS PLAN IF DEEMED ADVISABLE PRIOR TO FINAL DESIGN AND CONSTRUCTION.

ADDITIONAL CARDNO SUE FIELD INVESTIGATION WAS PERFORMED 11/17/16 THROUGH 12/09/16 AND SURVEYED BY CLAASSEN, WHITE & ASSOCIATES.

ALL UTILITIES SHOWN QUALITY LEVEL "B" UNLESS NOTED OTHERWISE.

20 0 METERS 20 40
50 0 FEET 50 100

LICENSED PROFESSIONAL ENGINEER KENNETH F. SLANINKA, Jr. 062-055488 STATE OF ILLINOIS

3-13-17
DATE
license expires 11-30-17

Cardno TBE

CWA SURVEY
CLAASSEN, WHITE & ASSOCIATES, P.C.
LAND SURVEYORS
121 AIRPORT DRIVE, UNIT L JOLIET, ILLINOIS 60431
(815) 744-3720 claassenwhite@cwasurvey.com

Dynasty Group
Engineers & Surveyors

TBE Job No. IL09510531, 563, 647, 737
SUE Plan Page: 2 of 12

Utility Quality Level "A": Visually Verified Test Hole
Utility Quality Level "B": Designating/non Visually Verified Test Hole
Utility Quality Level "C": Research with Survey
Utility Quality Level "D": Records Research

DESIGNED	JP	REVISED	① 12/20/16
DRAWN	SRK	REVISED	
CHECKED	MGR	REVISED	
DATE	12/18/15	REVISED	

STATE OF ILLINOIS
DEPARTMENT OF TRANSPORTATION

I-941-901-290 (Circle Interchange)
Chicago, Illinois

SHEET 1 OF 14 SHEETS

F.A. RTE.	SECTION	COUNTY	TOTAL SHEETS	SHEET NO.
	N/A	Cook	1360	600
		Contract No. N/A		
FED. ROAD DIST. NO. _	ILLINOIS	IDOT Project No. P-91-259-12		