ROUTE NO.	SECTION	COUNTY	TOTAL SHEETS	SHEET NO.
FAI 74	★	VERMILION	71	37
FED. ROAD DIST. NO. 7		ILLINOIS	FED. AID PROJECT-	

SHEET NO. 8
17 SHEETS

★ (10-92-8HB-4)BR

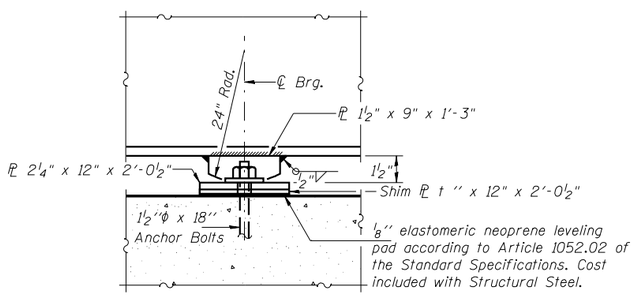

ELEVATION

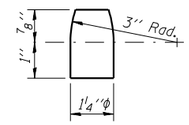

PINTLE

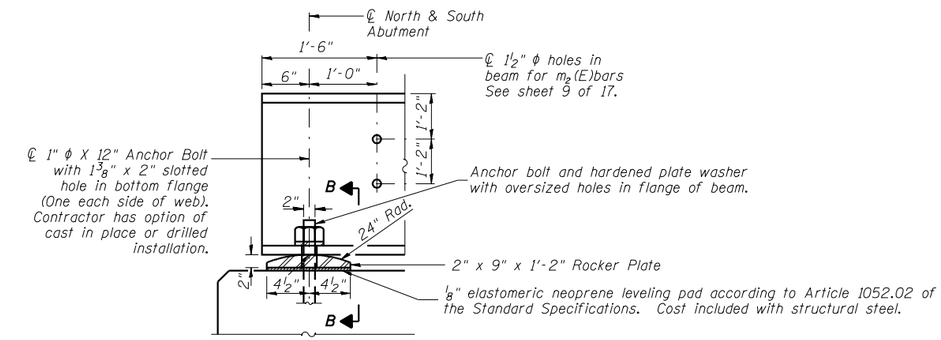

ELEVATION

Note "A"
1⅜''φ Holes-1'' deep in top PL for 1¼''φ Pintles. Thread or press fit pintles in bottom PL.

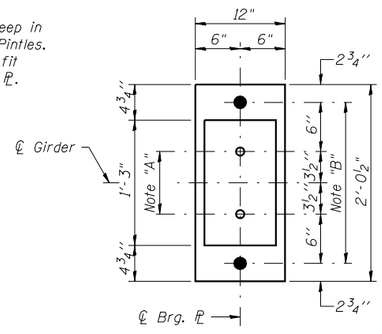

Note "B"
2''φ Holes for 1½''φ Anchor Bolts-3'' x 3'' x 5/16'' PL washer under nut.

PLAN AT PIER

INTERIOR GIRDER MOMENT TABLE			
		0.4 Sp. 1 & 0.6 Sp. 2	Pier
Is	(in4)	14929	32071
$I_{c(n)}$	(in4)	37204	
$I_{c(3n)}$	(in4)	26673	
Ss	(in3)	758	1387
$S_{c(n)}$	(in3)	1040	
$S_{c(3n)}$	(in3)	946	
Z	(in3)		
DC1	(k/ft)	0.760	0.900
M DC1	(k-ft)	595	1587
DC2	(k/ft)	0.137	0.137
M DC2	(k-ft)	109	214
DW	(k/ft)	0.267	0.267
M DW	(k-ft)	212	418
M LL	(k-ft)	1114	1084
M Imp	(k-ft)	367	358
M LL+Imp	(k-ft)	1481	1442
Ma (Strength I)	(k-ft)	3790	5402
Mr	(k-ft)	5371	
fs DC1	(ksi)	9.4	13.7
fs DC2	(ksi)	1.4	1.9
fs DW	(ksi)	2.7	3.6
fs 1.3(LL+I)	(ksi)	22.2	12.5
fs (Ser II)	(ksi)	35.7	31.7
fs (Total) (Strength I)	(ksi)		41.7
V_{sr}	(k)	23.1	

Interior Girder Reaction Table - HL93 Loading			
		Abututment	Pier
R_{DC1}	(k)	32.0	128.7
R_{DC2+DW}	(k)	16.2	55.6
R_{LL}	(k)	55.0	105.1
R_{Imp}	(k)	18.2	34.7
R (Total)	(k)	121.4	324.1

Interior Girder Reaction Table - HS20 Loading			
		Abututment	Pier
R_{DL}	(k)	47.9	184.7
R_{LL}	(k)	34.2	59.6
R_{Imp}	(k)	7.3	8.7
R (Total)	(k)	89.4	253.0

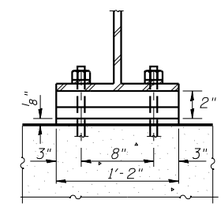

SECTION B-B

END OF GIRDER AT ABUTMENTS

Is and Ss are the moment of inertia and section modulus of the steel section used in computing fs due to non-composite loads.

$I_{c(n)}$ and $S_{c(n)}$ are the moment of inertia and section modulus of the composite section used in computing fs due to short-term composite loads.

$I_{c(3n)}$ and $S_{c(3n)}$ are the moment of inertia and section modulus of the composite section used in computing fs due to long-term composite loads.

V_{sr} is the maximum of 0.75 (LL+IM) shear range in span.

Z is the plastic section modulus used to determine the fully plastic moments in the non-composite areas.

Ma (Strength I)= 1.25 M(DC1+DC2) + 1.5 DW + 1.75 M(LL+Imp)

Mr is the Full Plastic Moment Capacity computed in accordance with AASHTO 6.10.3.1.3 and 6.10.4.2.2

fs (Service II) is the sum of the stresses due to DC1 + DC2 + DW +1.3 (LL+Imp).

fs (Total) (Non-compact section) is the sum of the stresses due to 1.25 (DC1 + DC2) +1.5 DW +1.75 (LL+Imp).

DC1 is the dead load acting on non-composite section.

DC2 is the dead load acting on the long-term composite section.

DW is the dead load acting on long-term composite section due to wearing surface.

Note: All Steel plates shown on this sheet shall be AASHTO M270 Grade 50.

LIN ENGINEERING, LTD.
210 N. Chestnut
(217) 483-468
Chatham, Illinois 62629
FAX (217) 483-4706

Designed By: MTH | Checked By: STD | Drawn By: JMD
Date: 11/02 | File: 092O203.DGN

REVISIONS	
NAME	DATE

ILLINOIS DEPARTMENT OF TRANSPORTATION

BEARING DETAILS
FAP ROUTE 840 (IL 49N)
OVER FAI RTE 74 (I-74)
SECTION (10-92-8HB-4) BR
VERMILION COUNTY
STA. 1160+20.53 (I-74)
STA. 50+00.00 (IL 49N)
STRUCTURE NO. 092-0203