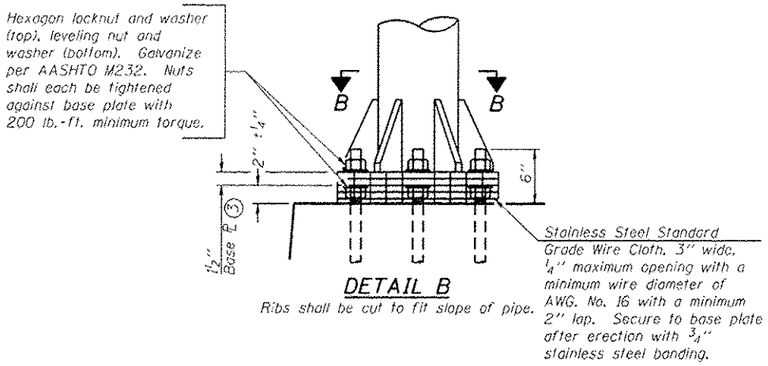

DETAIL B

Ribs shall be cut to fit slope of pipe.

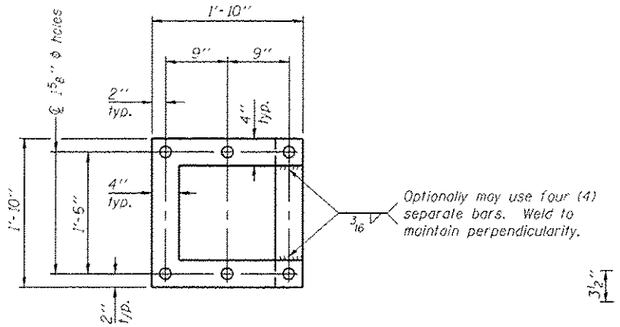

POSITIONING PLATE(S)

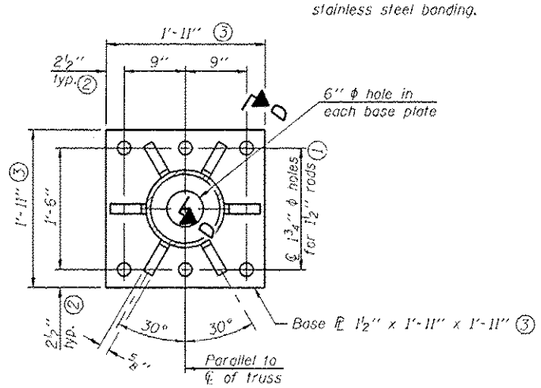

SECTION B-B

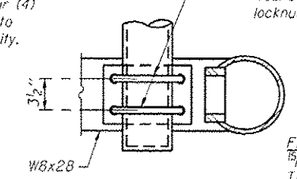

SECTION C-C

(Handhole cover not shown)

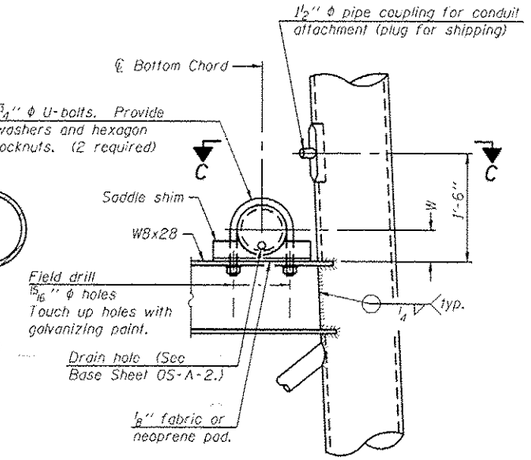

DETAIL C

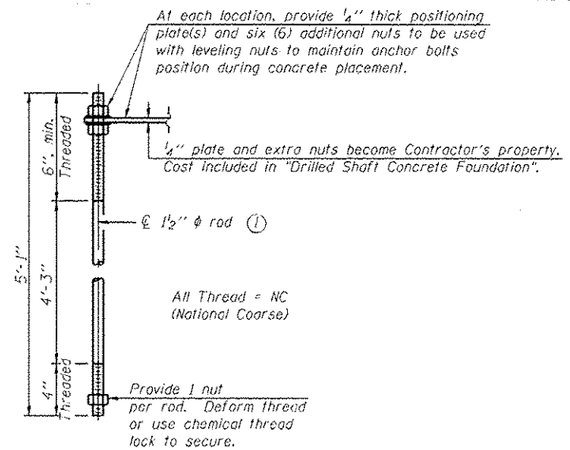

ANCHOR ROD DETAIL

Anchor rods shall conform to ASTM F1554 Grade 105 Galvanize upper 12" minimum per AASHTO M232. No welding shall be permitted on rods.

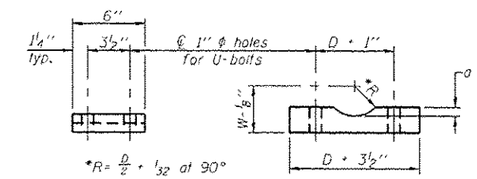

D = Outside Diameter of Chord.
For W, see Base Sheet OS-A-6.

Truss Chord Nominal Dia.	a
7"	1"
8 1/2"	1 1/4"
9"	1 3/8"

SADDLE SHIM DETAIL

ASTM B26 Alloy 356-F
or
ASTM B209 Alloy 6061-T651
(4 required per sign truss)

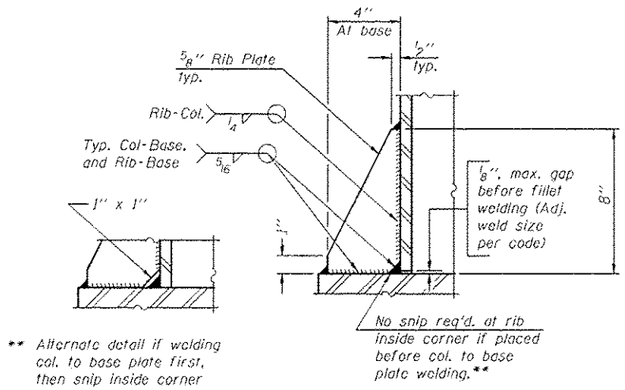

** Alternate detail if welding col. to base plate first, then snip inside corner of ribs. Terminate weld on rib 1/4" from snip.

SECTION D-D

TYPE III-A TRUSS
12" ϕ PIPE SUPPORT FRAME DETAILS

Notes:
For Type III-A Truss spans greater than 150 ft. and up to 160 ft.:

① 1 3/4" ϕ rod, 2" ϕ holes

② 2 3/4" edge distance

③ Base ℄ 1 5/8" x 1'-11 1/2" x 1'-11 1/2"

OS4-A-8aA 6-1-12

FILE NAME =	USER NAME = steffenrk	DESIGNED -	REVISED -	STATE OF ILLINOIS DEPARTMENT OF TRANSPORTATION	OVERHEAD SIGN STRUCTURES SUPPORT FRAME FOR TYPE III-A ALUMINUM TRUSS	F.A. RTE.	SECTION	COUNTY	TOTAL SHEETS / SHEET NO.
d:\pw_work\pwidot\steffenrk\d0358933\D746306-sht-details.dgn		DRAWN -	REVISED -			VARS	*	**	47 / 16
	PLOT SCALE = 100.0000 ' / in.	CHECKED -	REVISED -			* D7 OVC SIN STR REPL 14-42		CONTRACT NO. 46306	
Defaults	PLOT DATE = 10/29/2013	DATE -	REVISED -		SCALE: SHEET OF SHEETS STA. TO STA.	ILLINOIS FED. AID PROJECT			

**EFFINGHAM, MACON, COLES