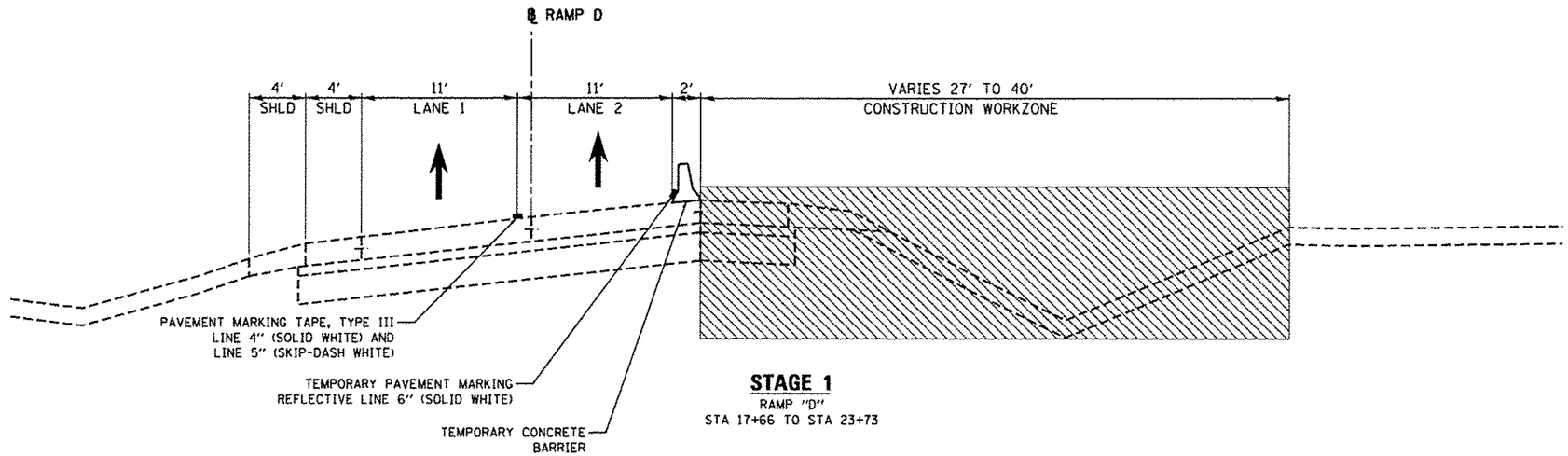

STAGE 1
RAMP "D"
STA 17+66 TO STA 23+73

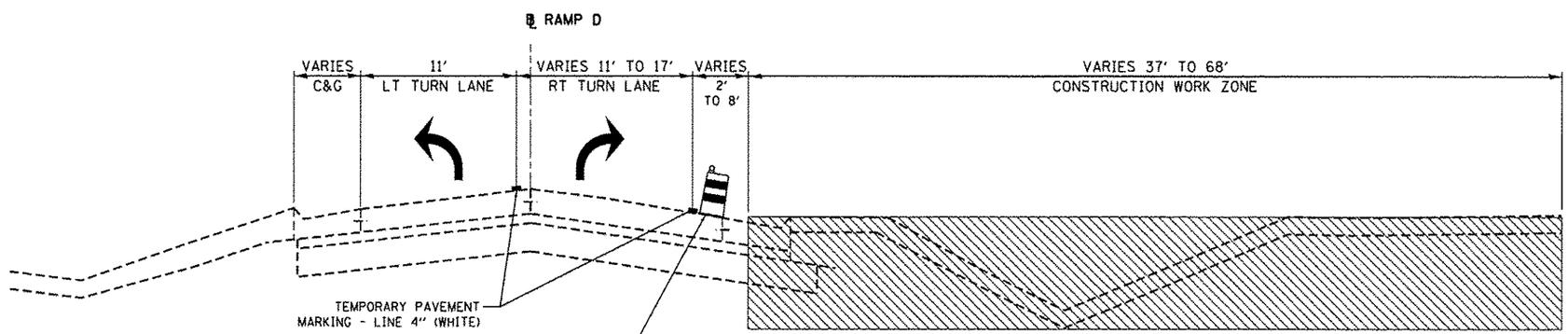

STAGE 1
RAMP "D"
STA 23+73 TO STA 24+57

SINGH + ASSOCIATES, INC. CONSULTING ENGINEERS	USER NAME = .USER.	DESIGNED - OB	REVISED -	STATE OF ILLINOIS DEPARTMENT OF TRANSPORTATION	SUGGESTED STAGES OF CONSTRUCTION AND TRAFFIC CONTROL RAMP D TYPICAL SECTIONS – STAGE 1	F.A.P. RTE.	SECTION	COUNTY	TOTAL SHEETS	SHEET NO.
	FILE NAME = D160W13-sht-staging3.dgn	DRAWN - AS	REVISED -			575	14-N	WILL	163	35
	PLOT SCALE = 5.0000 ' / in.	CHECKED - IY	REVISED -					CONTRACT NO. 60W13		
	PLOT DATE = 12/17/2013	DATE - 12/17/2013	REVISED -		SCALE: N/A SHEET 2 OF 4 SHEETS STA. N/A TO STA. N/A		ILLINOIS FED. AID PROJECT			