04-25-14 LETTING ITEM 111

F.A.P. RTE.	SECTION	COUNTY	TOTAL SHEETS	SHEET NO.
575	14-N	WILL	163	1
	ILLINOIS	CONTRACT NO. 60W13		

FOR INDEX OF SHEETS, SEE SHEET NO. 2
FOR LIST OF HIGHWAY STANDARDS, SEE SHEET NO. 3

PROJECT LOCATED IN THE CITY OF JOLIET

STATE OF ILLINOIS
DEPARTMENT OF TRANSPORTATION
DIVISION OF HIGHWAYS

PROPOSED HIGHWAY PLANS

FAP 575 (US 30)
SECTION 14–N
AT I–55 RAMPS B & D
LEFT AND RIGHT TURN LANES
PROJECT: ACCM-0575(185)
WILL COUNTY
C–91–184–13

RAMPS "B" & "D"
POSTED SPEED LIMIT = 40mph
DESIGN SPEED = 40mph

RAMP "B"
2010 ADT = 8,870
2040 ADT = 11,000

RAMP "D"
2010 ADT = 8,940
2040 ADT = 12,000

RAMP B
PROJECT LIMITS
STA 13+90.00

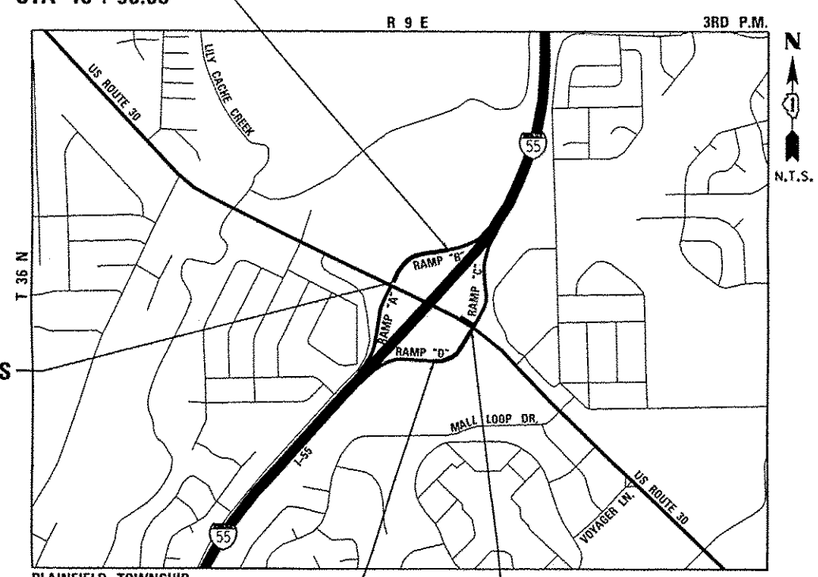

RAMP B
PROJECT LIMITS
STA 23+13.00

RAMP D
PROJECT LIMITS
STA 17+62.50

RAMP D
PROJECT LIMITS
STA 24+56.40

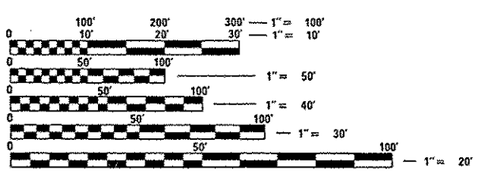

FULL SIZE PLANS HAVE BEEN PREPARED USING STANDARD ENGINEERING SCALES. REDUCED SIZED PLANS WILL NOT CONFORM TO STANDARD SCALES. IN MAKING MEASUREMENTS ON REDUCED PLANS, THE ABOVE SCALES MAY BE USED.

J.U.L.I.E.
JOINT UTILITY LOCATION INFORMATION FOR EXCAVATION
1–800–892–0123
OR 811

PROJECT ENGINEER: MARC GRIGAS, P.E. (STRAND) (815) 744–4200
PROJECT MANAGER: KEN ENG, P.E. (IDOT) (847) 705–4247

GROSS + NET LENGTH = 1,616.90 FT. = 0.306 MILE

CONTRACT NO. 60W13

STRAND ASSOCIATES, INC.
MARC A. GRIGAS, P.E.
THIS STAMP APPLIES TO
DRAWINGS NO. 1–32, 43–60, 102–143
MARC A. GRIGAS 062-060836 LICENSED PROFESSIONAL ENGINEER OF ILLINOIS
DATE: 12/16/13 EXP: 11/30/15

SINGH + ASSOCIATES, INC.
RAGHESHKUMAR PATEL, P.E.
THIS STAMP APPLIES TO
DRAWINGS NO. 44-101
RAGHESHKUMAR D. PATEL 062-064617 LICENSED PROFESSIONAL ENGINEER OF ILLINOIS
Ragh Patel
DATE: 12/16/13 EXP: 11/30/15

SINGH + ASSOCIATES, INC.
ISAAC YUN, P.E.
THIS STAMP APPLIES TO
DRAWINGS NO. 33-42, 61-93
ISAAC YUN 062-062257 LICENSED PROFESSIONAL ENGINEER OF ILLINOIS
DATE: 12/16/2013 EXP: 11/30/2015

D–91–184–13

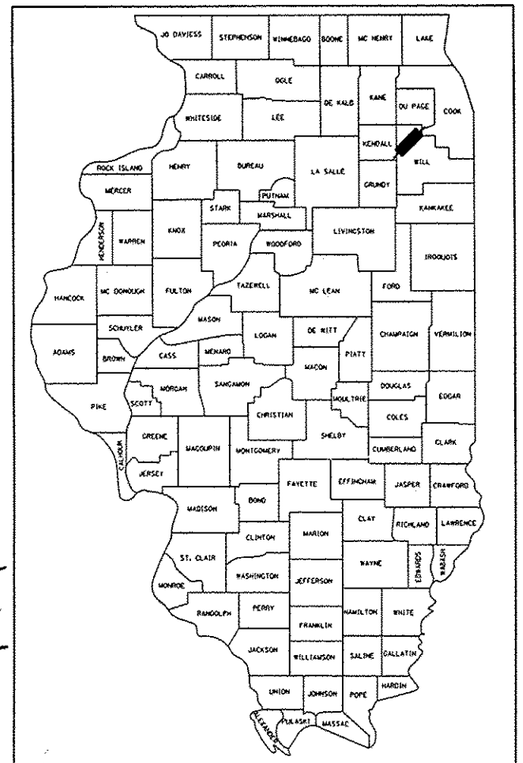

LOCATION OF SECTION INDICATED THUS:–

STRAND ASSOCIATES®
1170 SOUTH HOUBOLT ROAD
JOLIET, ILLINOIS 60431
(815) 744-4200
(DFPR NO. 184-001273)

STATE OF ILLINOIS
DEPARTMENT OF TRANSPORTATION
DIVISION OF HIGHWAYS

SUBMITTED December 18, 2013
John Fritzen
DEPUTY DIRECTOR OF HIGHWAYS, REGION ENGINEER
Jan 24 2014
John D. Baranzelli, P.E. /bl
acting ENGINEER OF DESIGN AND ENVIRONMENT
Jan 24 2014
Omer Osman, P.E. /bl
DIRECTOR OF HIGHWAYS, CHIEF ENGINEER

PRINTED BY THE AUTHORITY OF THE STATE OF ILLINOIS

INDEX OF SHEETS

INDEX OF SHEETS (CONTINUED)

IDOT HIGHWAY STANDARDS

IDOT HIGHWAY STANDARDS (CONT.)

GENERAL NOTES

1. ALL CONSTRUCTION SHALL BE DONE ACCORDING TO THE STATE OF ILLINOIS "STANDARD SPECIFICATIONS FOR ROAD AND BRIDGE CONSTRUCTION" ADOPTED JAN. 1, 2012, THE "SUPPLEMENTAL SPECIFICATIONS AND RECURRING SPECIAL PROVISIONS" ADOPTED JANUARY 1, 2014. THE DETAILS IN THESE PLANS, AND THE SPECIAL PROVISIONS INCLUDED IN THE CONTRACT DOCUMENTS.

2. THE SCALE SHOWN ON THE DRAWINGS APPLIES ONLY TO FULL SIZE PLANS AND NOT TO THE REDUCED SIZE PLANS. DO NOT SCALE PLANS FOR CONSTRUCTION DIMENSIONS.

3. ANY REFERENCE TO STANDARDS THROUGHOUT THE PLANS OR SPECIAL PROVISIONS SHALL BE INTERPRETED TO BE THE LATEST STANDARDS OF THE ILLINOIS DEPARTMENT OF TRANSPORTATION.

4. IT SHALL BE THE CONTRACTOR'S RESPONSIBILITY TO VERIFY ALL DIMENSIONS AND CONDITIONS EXISTING IN THE FIELD PRIOR TO CONSTRUCTION AND ORDERING OF MATERIALS.

5. THE LOCATION AND ELEVATION OF THE VARIOUS UNDERGROUND UTILITIES AS SHOWN ON THE DRAWINGS ARE APPROXIMATE. THE CONTRACTOR SHALL USE SPECIAL CARE WHEN CONDUCTING CONSTRUCTION OPERATIONS NEAR THEM AND IS RESPONSIBLE FOR ANY DAMAGE CAUSED.

6. THE CONTRACTOR SHALL NOTIFY THE AGENCIES AND UTILITIES AT LEAST 10 DAYS PRIOR TO ANY CONSTRUCTION IN THE AREA AND SHALL COMPLY WITH ALL RESTRICTIONS FOR EQUIPMENT MOVEMENTS AND CLEARANCES IN REGARDS TO THEIR FACILITIES.

7. 48 HOURS PRIOR TO THE START OF ANY EXCAVATION, THE CONTRACTOR SHALL CALL J.U.L.I.E. AND THE CITY OF JOLIET FOR VERIFICATION OF ALL UTILITY LOCATIONS IN THE FIELD.

8. THE CONTRACTOR SHALL CONTACT THE DISTRICT ONE ARTERIAL TRAFFIC CONTROL SUPERVISOR AT 847-705-4470 AND THE DISTRICT ONE TRAFFIC CONTROL SUPERVISOR AT 847-705-4155 A MINIMUM OF 72 HOURS IN ADVANCE OF BEGINNING ANY WORK.

9. THE CONTRACTOR SHALL COORDINATE WITH ALL ABOVE AND UNDERGROUND UTILITY COMPANIES IF UTILITIES NEED TO BE RELOCATED.

10. THE CONTRACTOR SHALL ENSURE ALL PERMITS HAVE BEEN OBTAINED PRIOR TO COMMENCEMENT OF WORK

11. WHERE SECTION OR SUBSECTION MONUMENTS ARE ENCOUNTERED, THE ENGINEER SHALL BE NOTIFIED BEFORE SUCH MONUMENTS ARE REMOVED. THE CONTRACTOR SHALL PROTECT AND CAREFULLY PRESERVE ALL PROPERTY MARKER MONUMENTS UNTIL THE OWNER, AN AUTHORIZED AGENT, OR LAND SURVEYOR HAS WITNESSED OR OTHERWISE REFERENCED THEIR LOCATION. THE CONTRACTOR WILL BE RESPONSIBLE FOR HAVING AN AUTHORIZED SURVEYOR REESTABLISH ANY SECTION OR SUB-SECTION MONUMENTS DISRUPTED BY THEIR OPERATIONS.

12. THE CONTRACTOR SHALL ENSURE THAT POSITIVE DRAINAGE IS MAINTAINED AT ALL TIMES DURING AND AFTER THE CONSTRUCTION OF THE PROPOSED COMBINATION CONCRETE CURB AND GUTTER. THIS WORK SHALL BE INCLUDED FOR THE CONTRACT UNIT PRICE FOR THE APPLICABLE TYPE OF COMBINATION CONCRETE CURB AND GUTTER.

13. PROPOSED CURB AND GUTTER HAS VARIABLE WIDTH GUTTERS AS SHOWN ON THE PLANS. THE VARIABLE WIDTH GUTTER SHALL BE INCLUDED IN THE CONTRACT UNIT PRICE FOR THE APPLICABLE TYPE OF COMBINATION CONCRETE CURB AND GUTTER.

14. THE CONTRACTOR SHALL TAKE ALL NECESSARY PRECAUTIONS FOR THE PROTECTION OF EXISTING PLANT MATERIAL FOR WHICH THE CONTRACT DOES NOT PROVIDE REMOVAL. THE PROTECTION OF EXISTING PLANT MATERIAL AND THE REPAIR OR REPLACEMENT OF EXISTING PLANT MATERIAL DAMAGED BY THE CONTRACTOR SHALL BE DONE IN ACCORDANCE WITH THE REQUIREMENTS OF SECTION 201 OF THE STANDARD SPECIFICATIONS.

15. THE CONTRACTOR SHALL BE REQUIRED TO MAINTAIN ACCESS TO ALL PRIVATE AND COMMERCIAL PROPERTIES AT ALL TIMES DURING THE CONSTRUCTION OF THIS PROJECT.

16. ALL DAMAGE TO EXISTING PAVEMENT MARKINGS OR RAISED REFLECTIVE PAVEMENT MARKERS OUTSIDE THE REMOVAL LINE SHOWN ON THE PLANS SHALL BE REPLACED AT THE CONTRACTOR'S EXPENSE.

17. USE #8 EPOXY-COATED TIE BARS, CONFORMING TO ART. 1006.10 OF THE STANDARD SPECIFICATION, FOR ALL TIE BARS BETWEEN TRAVEL LANES. USE THE "LONGITUDINAL CONSTRUCTION JOINT (TIE BAR GROUTED IN PLACE)" DETAIL SHOWN ON HIGHWAY STANDARD 420001 FOR ALL LONGITUDINAL JOINTS AS SHOWN IN THE PLANS.

18. ALL PAVEMENT PATCHING LOCATIONS WILL BE DETERMINED IN THE FIELD BY THE ENGINEER.

19. WHENEVER A SEWER CROSSES UNDER A WATER MAIN, THE MINIMUM VERTICAL DISTANCE FROM THE TOP OF THE SEWER TO THE BOTTOM OF THE WATER MAIN SHALL BE 18 INCHES. FURTHERMORE, A MINIMUM HORIZONTAL DISTANCE OF 10 FEET BETWEEN SEWERS AND WATER MAINS SHALL BE MAINTAINED UNLESS: THE SEWER IS LAID IN A SEPARATE TRENCH, KEEPING A MINIMUM 18" VERTICAL SEPARATION; OR THE SEWER IS LAID IN THE SAME TRENCH WITH THE WATER MAIN LOCATED AT THE OPPOSITE SIDE ON A BENCH OF UNDISTURBED EARTH, KEEPING A MINIMUM 18" VERTICAL SEPARATION. IF EITHER THE VERTICAL OR HORIZONTAL DISTANCES DESCRIBED ABOVE CANNOT BE MAINTAINED, OR THE SEWER CROSSES ABOVE THE WATER MAIN, THE SEWER SHALL BE CONSTRUCTED TO WATER MAIN STANDARDS.

20. THE CITY OF JOLIET WATER DEPARTMENT SHALL BE RESPONSIBLE FOR TURNING WATER MAIN VALVES ON AND OFF. THE CONTRACTOR IS NOT ALLOWED TO TURN THE WATER MAIN VALVES ON AND OFF.

21. ALL STORM SEWER AND CULVERTS SHALL BE O-RING GASKETED OR EQUAL CONFORMING TO ASTM C443. THIS WORK SHALL BE INCLUDED IN THE COST FOR STORM SEWERS OF THE CLASS, TYPE AND SIZE SPECIFIED.

22. LAYOUT AND STAKING FOR ALL CONSTRUCTION OPERATIONS SHALL BE PROVIDED BY THE CONTRACTOR.

23. TOP SOIL SHALL BE FERTILE, FRIABLE, NATURAL LOAM, SURFACE SOIL, REASONABLY FREE OF SUBSOIL, CLAY LUMPS, BRUSH WEEDS AND OTHER LITTER AND FREE OF ROOT STUMPS, STONES AND OTHER MATERIAL HARMFUL TO PLANT GROWTH. TOP SOIL MUST MEET REQUIREMENTS OF ARTICLE 1081.05.

24. CLEARING OF BRUSH, BUSHES AND TREES WITH A DIAMETER LESS THAN 6" WILL NOT BE PAID FOR SEPARATELY PER SECTION 202 OF THE STANDARD SPECIFICATIONS.

25. WHERE SPECIFIED ON THE PLANS, OR DIRECTED BY THE ENGINEER, TRIMMING OF VEGETATION WILL BE CONSIDERED TO BE CLEARING AND NOT MEASURED FOR PAYMENT.

26. THE COST OF CONNECTING EXISTING STORM SEWERS TO THE PROPOSED DRAINAGE SYSTEM AND/OR CONNECTING PROPOSED STORM SEWER TO EXISTING STRUCTURES SHALL BE CONSIDERED INCLUDED IN THE COST OF THE PROPOSED DRAINAGE STRUCTURE AND/OR THE COST OF THE PROPOSED STORM SEWER. ALL NECESSARY ADDITIONAL PIPE USED WILL BE PAID FOR AT THE CONTRACT UNIT PRICE FOR STORM SEWER OF THE SIZE REQUIRED.

27. WHEN EXISTING DRAINAGE FACILITIES ARE DISTURBED, THE CONTRACTOR SHALL PROVIDE AND MAINTAIN TEMPORARY OUTLETS AND CONNECTIONS FOR ALL PRIVATE OR PUBLIC DRAINS, SEWERS, OR CATCH BASINS. CONTRACTOR SHALL PROVIDE FACILITIES TO TAKE IN ALL STORM WATER WHICH WILL BE RECEIVED BY THESE DRAINS AND SEWERS AND DISCHARGE SAME. CONTRACTOR SHALL PROVIDE AND MAINTAIN AN EFFICIENT PUMPING PLANT, IF NECESSARY, AND A TEMPORARY OUTLET SHALL BE PREPARED AT ALL TIMES TO DISPOSE OF THE WATER RECEIVED FROM THESE TEMPORARY CONNECTIONS UNTIL SUCH TIME AS THE PERMANENT ROADSIDE DRAINAGE SYSTEM IS BUILT AND IN SERVICE. THIS WORK WILL NOT BE PAID FOR DIRECTLY, BUT SHALL BE INCLUDED IN THE COST OF EARTH EXCAVATION.

28. PROPOSED END SECTIONS SHALL BE SLOPED TO MATCH THE PROPOSED CULVERTS AND STORM SEWER PIPE SLOPES. STORM SEWER PIPE LENGTHS IN SCHEDULES INCLUDE THE LENGTH OF END SECTION WHERE APPLICABLE. DRAINAGE STRUCTURE GRADES SHALL BE VERIFIED IN THE FIELD PRIOR TO INSTALLATION OF DRAINAGE ITEMS. DRAINAGE STRUCTURES MAY REQUIRE REVISIONS TO MEET EXISTING FIELD CONDITIONS. ANY ADJUSTMENT SHALL BE AS DIRECTED BY THE ENGINEER. PROPOSED RIM ELEVATIONS SHOWN FOR DRAINAGE STRUCTURES IN THE GUTTER REFERENCE THE PROPOSED EDGE OF PAVEMENT ELEVATION.

29. UNLESS OTHERWISE NOTED, LOCATIONS SHOWN ON THE PLANS ARE TO THE CENTER OF GUTTER FOR GRATES IN THE CURB AND GUTTER AND TO THE CENTER OF THE GRATE/LID FOR ALL OTHER STRUCTURES. FLAT TOPS AND CONES ARE TO BE TURNED SO THAT THE FRAME IS CLOSEST TO THE CENTER LINE OF THE ROAD, UNLESS OTHERWISE NOTED ON THE STRUCTURE IN THE PLANS. ALL FLAT TOPS AND CONES ARE ASSUMED TO BE ECCENTRIC.

30. ALL SUBSURFACE DRAINS AND/OR FIELD TILES ENCOUNTERED IN THE ROADWAY EXCAVATION SHALL BE REMOVED AND CONSIDERED TO BE INCLUDED IN THE COST OF EARTH EXCAVATION. THE CONTRACTOR SHALL BE RESPONSIBLE FOR CAPPING THE EXISTING SUBSURFACE DRAINS OR CONNECTING TO THE PROPOSED DITCHES AT THE LOCATIONS SHOWN IN THE PLANS OR AS DIRECTED BY THE OWNER. THIS WORK SHALL NOT BE MEASURED SEPARATELY FOR PAYMENT, BUT SHALL BE INCLUDED IN THE COST OF EARTH EXCAVATION.

31. UNDERDRAIN MINIMUM SLOPES SHALL BE 0.20% AND HAVE BEEN IDENTIFIED ON THE DRAINAGE PLAN AND PROFILE SHEETS. TRANSVERSE UNDERDRAINS SHALL MATCH THE CROSS SLOPE OF THE ROADWAY SURFACE.

32. REMOVAL OF END SECTIONS SHALL BE PAID PER FOOT UNDER PIPE CULVERT OR STORM SEWER REMOVAL.

33. THE PROPOSED DRAINAGE STRUCTURES AND PIPES SHALL BE PROTECTED IMMEDIATELY AFTER THEY ARE CONSTRUCTED UNTIL THE SURFACES THAT DRAIN TO THEM ARE FULLY PAVED OR VEGETATED.

34. ALL SIGN RELOCATIONS AND PROPOSED SIGNS SHALL BE PLACED IN THE LOCATION INDICATED IN THE SIGN SCHEDULE IN THE SCHEDULE OF QUANTITIES. ALL SIGNS SHALL BE INSTALLED ACCORDING TO THE MUTCD AND THE ILLINOIS STANDARD SPECIFICATIONS.

35. IT IS ASSUMED THAT THE TOP 12" OF THE EXISTING GROUND OUTSIDE THE PAVEMENT SHALL BE EXCAVATED AND RE-SPREAD. QUANTITIES FOR THIS WORK ARE INCLUDED IN TOP SOIL EXCAVATION AND PLACEMENT.

36. THE CONTRACTOR SHALL BE SOLELY RESPONSIBLE FOR JOB SITE SAFETY AS WELL AS SUPERVISION, DIRECTION AND MEANS/METHOD OF CONSTRUCTION.

37. THE CONTRACTOR'S ATTENTION IS CALLED TO THE FACT THAT THE PRESERVATION OF EXISTING TREES IS OF UTMOST IMPORTANCE. ALL TREE PROTECTION, TREE REMOVAL, PRUNING AND ROOT PRUNING SHALL BE COMPLETED BEFORE CONSTRUCTION OPERATIONS COMMENCE IN ANY AREA. AT NO TIME SHALL THE CONTRACTOR PRUNE OR REMOVE ANY TREES UNLESS SPECIFICALLY DIRECTED BY THE ENGINEER.

38. THE GENERAL CONTRACTOR IS REQUIRED TO HIRE AN ENVIRONMENTAL FIRM WITH AT LEAST FIVE (5) DOCUMENTED LEAKING UNDERGROUND STORAGE CLEANUPS OR THAT IS PRE-QUALIFIED IN HAZARDOUS WASTE BY THE DEPARTMENT TO REMEDIATE THE SOIL CONTAMINATION AND MONITOR FOR WORKER PROTECTION.

39. THE CONTRACTOR SHALL ERECT A PERIMETER EROSION BARRIER AROUND EXISTING WETLANDS TO ESTABLISH A "WETLAND PROTECTION ZONE" BEFORE ANY WORK BEGINS OR ANY MATERIAL IS DELIVERED TO THE JOBSITE. NO WORK IS TO BE PERFORMED, MATERIALS STORED OR VEHICLES DRIVEN OR PARKED WITHIN THE "WETLAND PROTECTION ZONE". REMOVE PERIMETER EROSION BARRIER ONLY AFTER ALL CONSTRUCTION WORK HAS BEEN COMPLETED.

40. THE CONTRACTOR SHALL ATTACH AN ALUMINUM SIGN WITH THE FOLLOWING TEXT:
PROTECTED WETLAND - NO INTRUSION. THE SIGN(S) SHALL BE ATTACHED TO THE STAKES BY A METHOD APPROVED BY THE ENGINEER. THE SIGN(S) WILL BE PROVIDED BY THE DEPARTMENT AND SHALL BE PICKED UP BY THE CONTRACTOR FROM THE DISTRICT ONE ROADSIDE DEVELOPMENT ARCHITECT IN SCHAUMBURG, ILLINOIS. SCHEDULING THE PICKUP OF THE SIGNS CAN BE ARRANGED BY CONTACTING THE DISTRICT ONE ROADSIDE DEVELOPMENT UNIT AT (847)705-4171. WHEN WORK HAS BEEN COMPLETED, THE SIGN SHALL BE RETURNED TO THE DISTRICT ONE ROADSIDE DEVELOPMENT UNIT. THE COST OF PICKING UP, ATTACHING THE SIGNS TO THE TEMPORARY STAKES AND RETURNING THE SIGNS WILL NOT BE PAID FOR SEPARATELY, BUT SHALL BE INCLUDED IN THE CONTRACT UNIT PRICE FOR PERIMETER EROSION BARRIER.

41. QUANTITIES AND ASSOCIATED PAY ITEMS FOR EARTHWORK, LANDSCAPE RESTORATION, AND EROSION CONTROL WERE DEVELOPED ACCORDING TO THE NECESSARY GRADING FOR THE PROJECT PROPOSED AS SHOWN IN THE CROSS SECTIONS. AREAS DISTURBED BEYOND THE SLOPE INTERCEPTS SHALL HAVE EROSION CONTROL AND LANDSCAPING RESTORATION ACCORDING TO THE ADJACENT REQUIREMENTS SHOWN IN THE PLANS. THE GROUND SHALL BE GRADED AND RESTORED TO MATCH THE EXISTING PRE-CONSTRUCTION CONDITIONS. ALL WORK DESCRIBED ABOVE BEYOND THE SLOPE INTERCEPTS WILL NOT BE PAID FOR SEPARATELY AND SHALL BE CONSIDERED INCIDENTAL TO EARTH EXCAVATION.

42. FOR STORM SEWER CONSTRUCTED UNDER THE ROADWAY, BACKFILLING METHODS TWO AND THREE AUTHORIZED UNDER THE PROVISIONS OF ARTICLE 550.07 OF THE STANDARD SPECIFICATIONS WILL NOT BE ALLOWED.

43. ALL SAW CUTS NOT REQUIRED FOR REMOVAL OF EXISTING PAVEMENT FOR PRECAST CONCRETE PAVEMENT SLABS SHALL BE INCLUDED IN THE COST OF THE VARIOUS REMOVAL ITEMS.

44. THE TIE BARS AT THE LONGITUDINALLY SAWED OR CONSTRUCTION JOINT BETWEEN THE PCC SHOULDER AND THE ANCHOR SLAB OR BETWEEN PCC PAVEMENT SHALL NOT BE PAID FOR SEPARATELY BUT SHALL BE CONSIDERED INCLUDED IN THE COST PER SQUARE YARD OF THE PCC SHOULDER OR PCC PAVEMENT.

45. THE HOLES CREATED IN THE NEW PCC PAVEMENT FROM PINNING THE TEMPORARY IMPACT ATTENUATORS AND TEMPORARY CONCRETE BARRIERS SHALL BE FILLED WITH GROUT. FILLING THE HOLES WITH GROUT SHALL BE INCLUDED IN THE COST OF IMPACT ATTENUATORS, TEMPORARY AND TEMPORARY CONCRETE BARRIER.

46. FOR WORK OUTSIDE THE LIMITS OF BRIDGE APPROACH PAVEMENT, ALL REFERENCES IN THE HIGHWAY STANDARDS AND STANDARD SPECIFICATIONS FOR REINFORCEMENT, DOWEL BARS AND TIE BARS IN PAVEMENT, SHOULDERS, CURB, GUTTER, COMBINATION CURB & GUTTER AND MEDIAN, AND CHAIR SUPPORTS FOR CRC PAVEMENT, SHALL BE EPOXY COATED, UNLESS NOTED ON THE PLANS.

47. TWO WEEKS PRIOR TO PLACEMENT OF PERMANENT PAVEMENT MARKINGS, ENGINEER SHALL CONTACT CORY JUCIUS, ARTERIAL TRAFFIC OPERATIONS ENGINEER AT 847-705-4411.

48. BELOW ARE CONTACT DETAILS FOR VARIOUS BUSINESSES AND UTILITIES THAT WILL BE AFFECTED BY THE PROJECT.

AGENCY - CONTACT PERSON - TELEPHONE

NICOR - CONSTANCE LANE - (630) 388-3830
AT&T - BRUCE BROWN - (630) 573-5715
COMED - JOSEPH STACHO - (630) 424-5704
COMCAST CABLE COMM. - MARTHA GIERAS - (630 600-6352
CITY OF JOLIET - JIM EGGEN - (815) 724-4260

COMMITMENTS

THERE ARE NO COMMITMENTS FOR THIS PROJECT.

[ ] DENOTES WORK INCLUDED IN THE COST OF OTHER ITEMS.

FILE NAME = S:\JOL\60383--639\60346\005\Micro\CADD Sheets\60W13-sht-generic.dgn

STRAND ASSOCIATES®
1170 SOUTH HOUBOLT ROAD
JOLIET, ILLINOIS 60431
(815) 744-4200

USER NAME = dennisw	DESIGNED - JLB	REVISED -	
MODEL NAME = Default	DRAWN - DJW	REVISED -	
PLOT SCALE = 2.0000 ' / in.	CHECKED - BMA	REVISED -	
PLOT DATE = 12/18/2013	DATE - 12/17/13	REVISED -	

STATE OF ILLINOIS
DEPARTMENT OF TRANSPORTATION

GENERAL NOTES

SCALE: N/A | SHEET 1 OF 1 SHEETS | STA. TO STA.

F.A.P. RTE.	SECTION	COUNTY	TOTAL SHEETS	SHEET NO.
575	14-N	WILL	163	3

CONTRACT NO. 60W13

ILLINOIS FED. AID PROJECT

				LH0EL.01	07A0L.01	L40EL.01	L40EL.02		07P0L.01		L40EL.03	L40EL.04
				CONSTRUCTION CODE								
				80% FED 20% STATE	100% STATE	80% FED 20% STATE	80% FED 20% STATE	80% FED 10% STATE 10% JOLIET	100% JOLIET	100% JOLIET	80% FED 20% STATE	80% FED 20% STATE
				ROADWAY 0004	ROADWAY 0004	RAMP B	RAMP D	VOYAGER LN.	RAMP B	RAMP D	INTER-CONNECT 0021	STREET LIGHTING 0021
						TRAFFIC SIGNALS 0021			EVP 0021			
CODE NO.	ITEM	UNIT	TOTAL QUANTITY	URBAN	URBAN	URBAN	URBAN	URBAN	URBAN	URBAN	URBAN	URBAN
20100110	TREE REMOVAL (6 TO 15 UNITS DIAMETER)	UNIT	7	7								
20101200	TREE ROOT PRUNING	EACH	1	1								
20200100	EARTH EXCAVATION	CU YD	895	895								
20201200	REMOVAL AND DISPOSAL OF UNSUITABLE MATERIAL	CU YD	2,150	2,150								
20400800	FURNISHED EXCAVATION	CU YD	1,980	1,980								
20800150	TRENCH BACKFILL	CU YD	30	30								
21001000	GEOTECHNICAL FABRIC FOR GROUND STABILIZATION	SQ YD	528.	528								
21101505	TOPSOIL EXCAVATION AND PLACEMENT	CU YD	2,445	2,445								
25000210	SEEDING, CLASS 2A	ACRE	1	1								
25000310	SEEDING, CLASS 4	ACRE	1	1								
25000400	NITROGEN FERTILIZER NUTRIENT	POUND	113	113								
25000600	POTASSIUM FERTILIZER NUTRIENT	POUND	113	113								
25000775	SELECTIVE MOWING STAKES	EACH	2	2								
25100630	EROSION CONTROL BLANKET	SQ YD	13,949	13,949								

* SPECIALTY ITEM

FILE NAME = S:\JOL\65302-6399\6346\805\Micro\C600_Sheets\60W13-sht-SQQ.dgn

STRAND ASSOCIATES® 1170 SOUTH HOLBOLT ROAD JOLIET, ILLINOIS 60431 (815) 744-4200

USER NAME = BillP	DESIGNED - JLB	REVISED -	
MODEL NAME = Default	DRAWN - DJW	REVISED -	
PLOT SCALE = 2.0000 ' / in.	CHECKED - BMA	REVISED -	
PLOT DATE = 12/23/2013	DATE - 12/17/13	REVISED -	

STATE OF ILLINOIS
DEPARTMENT OF TRANSPORTATION

SUMMARY OF QUANTITIES

SCALE: | SHEET OF SHEETS | STA. TO STA.

F.A. RTE.	SECTION	COUNTY	TOTAL SHEETS	SHEET NO.
575	14-N	WILL	163	4
		CONTRACT NO. 60W13		
		ILLINOIS FED. AID PROJECT		

				CONSTRUCTION CODE								
				80% FED 20% STATE	100% STATE	80% FED 20% STATE	80% FED 20% STATE	80% FED 10% STATE 10% JOLIET	100% JOLIET	100% JOLIET	80% FED 20% STATE	80% FED 20% STATE
				ROADWAY 0004	ROADWAY 0004	RAMP B	RAMP D	VOYAGER LN.	RAMP B	RAMP D	INTER-CONNECT 0021	STREET LIGHTING 0021
						TRAFFIC SIGNALS 0021			EVP 0021			
CODE NO.	ITEM	UNIT	TOTAL QUANTITY	URBAN	URBAN	URBAN	URBAN	URBAN	URBAN	URBAN	URBAN	URBAN
28000200	EARTH EXCAVATION FOR EROSION CONTROL	CU YD	113	113								
28000250	TEMPORARY EROSION CONTROL SEEDING	POUND	160	160								
28000305	TEMPORARY DITCH CHECKS	FOOT	69	69								
28000400	PERIMETER EROSION BARRIER	FOOT	972	972								
28000500	INLET AND PIPE PROTECTION	EACH	2	2								
28000510	INLET FILTERS	EACH	6	6								
28001000	AGGREGATE (EROSION CONTROL)	TON	32	32								
28100107	STONE RIPRAP, CLASS A4	SQ YD	20	20								
28200200	FILTER FABRIC	SQ YD	20	20								
30300001	AGGREGATE SUBGRADE IMPROVEMENT	CU YD	230	230								
30300112	AGGREGATE SUBGRADE IMPROVEMENT 12"	SQ YD	4,365	4,365								
31102100	SUBBASE GRANULAR MATERIAL, TYPE C 4"	SQ YD	1,202	1,202								
31200500	STABILIZED SUBBASE - HOT-MIX ASPHALT, 4"	SQ YD	3,052	3,052								
35800200	AGGREGATE BASE REPAIR	TON	193	193								

* SPECIALTY ITEM

FILE NAME = S:\JOL\6GW13-63PP\63\60\Micro\C600 Sheets\6GW13-sht-S00.dgn

STRAND ASSOCIATES® 1170 SOUTH HOUBOLT ROAD JOLIET, ILLINOIS 60431 (815) 744-4200

USER NAME = BillP	DESIGNED - JLB	REVISED -
MODEL NAME = Default	DRAWN - DJW	REVISED -
PLOT SCALE = 2.0000 ' / in.	CHECKED - BMA	REVISED -
PLOT DATE = 12/23/2013	DATE - 12/17/13	REVISED -

STATE OF ILLINOIS
DEPARTMENT OF TRANSPORTATION

SUMMARY OF QUANTITIES

SCALE: | SHEET OF SHEETS | STA. TO STA.

F.A. RTE.	SECTION	COUNTY	TOTAL SHEETS	SHEET NO.
575	14-N	WILL	163	5
		CONTRACT NO. 60W13		
	ILLINOIS FED. AID PROJECT			

				CONSTRUCTION CODE								
				80% FED 20% STATE	100% STATE	80% FED 20% STATE	80% FED 20% STATE	80% FED 10% STATE 10% JOLIET	100% JOLIET	100% JOLIET	80% FED 20% STATE	80% FED 20% STATE
				ROADWAY 0004	ROADWAY 0004	RAMP B	RAMP D	VOYAGER LN.	RAMP B	RAMP D	INTER-CONNECT 0021	STREET LIGHTING 0021
						TRAFFIC SIGNALS 0021			EVP 0021			
CODE NO.	ITEM	UNIT	TOTAL QUANTITY	URBAN	URBAN	URBAN	URBAN	URBAN	URBAN	URBAN	URBAN	URBAN
40300100	BITUMINOUS MATERIALS (PRIME COAT)	GALLON	2,669	2,669								
42000416	PORTLAND CEMENT CONCRETE PAVEMENT 9 3/4" (JOINTED)	SQ YD	2,869	2,869								
42001300	PROTECTIVE COAT	SQ YD	4,195	4,195								
44000100	PAVEMENT REMOVAL	SQ YD	372	372								
44000500	COMBINATION CURB AND GUTTER REMOVAL	FOOT	612	612								
44004250	PAVED SHOULDER REMOVAL	SQ YD	1,016	1,016								
44213200	SAW CUTS	FOOT	567	567								
48300415	PORTLAND CEMENT CONCRETE SHOULDERS 9 3/4"	SQ YD	1,227	1,227								
50105220	PIPE CULVERT REMOVAL	FOOT	6	6								
54213657	PRECAST REINFORCED CONCRETE FLARED END SECTIONS 12"	EACH	1	1								
54213675	PRECAST REINFORCED CONCRETE FLARED END SECTIONS 30"	EACH	1	1								
550A0340	STORM SEWERS, CLASS A, TYPE 2 12"	FOOT	27	27								
550A0380	STORM SEWERS, CLASS A, TYPE 2 18"	FOOT	42	42								
550A0410	STORM SEWERS, CLASS A, TYPE 2 24"	FOOT	30	30								

* SPECIALTY ITEM

FILE NAME = S:\JOB\6320-639\GS\GS\DPS\Micro\ICAGD Sheets\SBM13-bk-SGD.dgn

STRAND ASSOCIATES
1170 SOUTH HOUBOLT ROAD
JOLIET, ILLINOIS 60431
(815) 744-4200

USER NAME = BillP	DESIGNED - JLB	REVISED -	
MODEL NAME = Default	DRAWN - DJW	REVISED -	
PLOT SCALE = 2.0000 ' / in.	CHECKED - BMA	REVISED -	
PLOT DATE = 12/23/2013	DATE - 12/17/13	REVISED -	

STATE OF ILLINOIS
DEPARTMENT OF TRANSPORTATION

SUMMARY OF QUANTITIES

SCALE: | SHEET OF SHEETS | STA. TO STA.

F.A. RTE.	SECTION	COUNTY	TOTAL SHEETS	SHEET NO.
575	14-N	WILL	163	6
		CONTRACT NO. 60W13		
		ILLINOIS FED. AID PROJECT		

				CONSTRUCTION CODE								
				80% FED 20% STATE	100% STATE	80% FED 20% STATE	80% FED 20% STATE	80% FED 10% STATE 10% JOLIET	100% JOLIET	100% JOLIET	80% FED 20% STATE	80% FED 20% STATE
				ROADWAY 0004	ROADWAY 0004	RAMP B	RAMP D	VOYAGER LN.	RAMP B	RAMP D	INTER-CONNECT 0021	STREET LIGHTING 0021
						TRAFFIC SIGNALS 0021			EVP 0021			
CODE NO.	ITEM	UNIT	TOTAL QUANTITY	URBAN	URBAN	URBAN	URBAN	URBAN	URBAN	URBAN	URBAN	URBAN
550A0430	STORM SEWERS, CLASS A, TYPE 2 30"	FOOT	19	19								
55100500	STORM SEWER REMOVAL 12"	FOOT	27	27								
55100900	STORM SEWER REMOVAL 18"	FOOT	6	6								
60100060	CONCRETE HEADWALLS FOR PIPE DRAINS	EACH	3	3								
60107700	PIPE UNDERDRAINS 6"	FOOT	692	692								
60108200	PIPE UNDERDRAINS 6" (SPECIAL)	FOOT	70	70								
60219540	MANHOLES, TYPE A, 4'-DIAMETER, TYPE 24 FRAME AND GRATE	EACH	1	1								
60221100	MANHOLES, TYPE A, 5'-DIAMETER, TYPE 1 FRAME, CLOSED LID	EACH	1	1								
60500040	REMOVING MANHOLES	EACH	1	1								
60600095	CLASS SI CONCRETE (OUTLET)	CU YD	12	12								
60605000	COMBINATION CONCRETE CURB AND GUTTER, TYPE B-6.24	FOOT	451	451								
60605100	COMBINATION CONCRETE CURB AND GUTTER, TYPE B-6.24 (ABUTTING EXISTING PAVEMENT)	FOOT	229	229								
60608600	COMBINATION CONCRETE CURB AND GUTTER, TYPE M-6.06	FOOT	51	51								
60610500	COMBINATION CONCRETE CURB AND GUTTER, TYPE M-6.24 (ABUTTING EXISTING PAVEMENT)	FOOT	68	68								

* SPECIALTY ITEM

FILE NAME = S:\JOL\16300-63999\6346\050\Micros\CADD Sheets\60W13-ht-500.dgn

STRAND ASSOCIATES
1170 SOUTH HOUBOLT ROAD
JOLIET, ILLINOIS 60431
(815) 744-4200

USER NAME = 8:11P	DESIGNED - JLB	REVISED -	
MODEL NAME = Defaults	DRAWN - DJW	REVISED -	
PLOT SCALE = 2.0223 ' / in.	CHECKED - BMA	REVISED -	
PLOT DATE = 12/23/2013	DATE - 12/17/13	REVISED -	

STATE OF ILLINOIS
DEPARTMENT OF TRANSPORTATION

SUMMARY OF QUANTITIES

SCALE: | SHEET OF SHEETS | STA. TO STA.

F.A. RTE.	SECTION	COUNTY	TOTAL SHEETS	SHEET NO.
575	14-N	WILL	163	7

CONTRACT NO. 60W13

ILLINOIS FED. AID PROJECT

				CONSTRUCTION CODE								
				80% FED 20% STATE	100% STATE	80% FED 20% STATE	80% FED 20% STATE	80% FED 10% STATE 10% JOLIET	100% JOLIET	100% JOLIET	80% FED 20% STATE	80% FED 20% STATE
				ROADWAY 0004	ROADWAY 0004	RAMP B	RAMP D	VOYAGER LN.	RAMP B	RAMP D	INTER-CONNECT 0021	STREET LIGHTING 0021
						TRAFFIC SIGNALS 0021			EVP 0021			
CODE NO.	ITEM	UNIT	TOTAL QUANTITY	URBAN	URBAN	URBAN	URBAN	URBAN	URBAN	URBAN	URBAN	URBAN
60618300	CONCRETE MEDIAN SURFACE, 4 INCH	SQ FT	724	724								
63500105	DELINEATORS	EACH	25	25								
67000400	ENGINEER'S FIELD OFFICE, TYPE A	CAL MO	6	6								
67100100	MOBILIZATION	L SUM	1	1								
70106800	CHANGEABLE MESSAGE SIGN	CAL MO	8	8								
70300100	SHORT TERM PAVEMENT MARKING	FOOT	1,692	1,692								
70300210	TEMPORARY PAVEMENT MARKING LETTERS AND SYMBOLS	SQ FT	396	396								
70300240	TEMPORARY PAVEMENT MARKING - LINE 6"	FOOT	1,232	1,232								
70300520	PAVEMENT MARKING TAPE, TYPE III 4"	FOOT	7,111	7,111								
70300530	PAVEMENT MARKING TAPE, TYPE III 5"	FOOT	419	419								
70300540	PAVEMENT MARKING TAPE, TYPE III 6"	FOOT	936	936								
70300550	PAVEMENT MARKING TAPE, TYPE III 8"	FOOT	832	832								
70300560	PAVEMENT MARKING TAPE, TYPE III 12"	FOOT	272	272								
70300570	PAVEMENT MARKING TAPE, TYPE III 24"	FOOT	246	246								

* SPECIALTY ITEM

FILE NAME = S:\JOB\50300-69\PVG\345\PDM\Micro\CHGO Sheets\EBW13-sht-500.dgn

STRAND ASSOCIATES
1170 SOUTH HOUBOLT ROAD
JOLIET, ILLINOIS 60431
(815) 744-6200

USER NAME = BillP	DESIGNED - JLB	REVISED -	
MODEL NAME = Default	DRAWN - DJW	REVISED -	
PLOT SCALE = 2.0000 ' / in.	CHECKED - BMA	REVISED -	
PLOT DATE = 12/23/2013	DATE - 12/17/13	REVISED -	

STATE OF ILLINOIS
DEPARTMENT OF TRANSPORTATION

SUMMARY OF QUANTITIES

SCALE: | SHEET OF SHEETS | STA. TO STA.

F.A. RTE.	SECTION	COUNTY	TOTAL SHEETS	SHEET NO.
575	14-N	WILL	163	8

CONTRACT NO. 60W13

ILLINOIS FED. AID PROJECT

				CONSTRUCTION CODE								
				80% FED 20% STATE	100% STATE	80% FED 20% STATE	80% FED 20% STATE	80% FED 10% STATE 10% JOLIET	100% JOLIET	100% JOLIET	80% FED 20% STATE	80% FED 20% STATE
				ROADWAY 0004	ROADWAY 0004	RAMP B	RAMP D	VOYAGER LN.	RAMP B	RAMP D	INTER-CONNECT 0021	STREET LIGHTING 0021
						TRAFFIC SIGNALS 0021			EVP 0021			
CODE NO.	ITEM	UNIT	TOTAL QUANTITY	URBAN	URBAN	URBAN	URBAN	URBAN	URBAN	URBAN	URBAN	URBAN
70301000	WORK ZONE PAVEMENT MARKING REMOVAL	SQ FT	792	792								
70400100	TEMPORARY CONCRETE BARRIER	FOOT	1,250	1,250								
70600350	IMPACT ATTENUATORS, RELOCATE (NON- REDIRECTIVE), TEST LEVEL 3	EACH	2	2								
• 72000100	SIGN PANEL - TYPE 1	SQ FT	106	90		8	8					
• 72000200	SIGN PANEL - TYPE 2	SQ FT	173	173								
• 72000300	SIGN PANEL - TYPE 3	SQ FT	377	377								
* 72400310	REMOVE SIGN PANEL - TYPE 1	SQ FT	73	73								
* 72400320	REMOVE SIGN PANEL - TYPE 2	SQ FT	30	30								
* 72400330	REMOVE SIGN PANEL - TYPE 3	SQ FT	588	588								
* 72400730	RELOCATE SIGN PANEL - TYPE 3	SQ FT	96	96								
• 72700100	STRUCTURAL STEEL SIGN SUPPORT - BREAKAWAY	POUND	2,468	2,468								
• 73000100	WOOD SIGN SUPPORT	FOOT	452	452								
• 73400100	CONCRETE FOUNDATIONS	CU YD	9	9								
* 73502000	RELOCATE GROUND MOUNTED SIGN SUPPORT	EACH	2	2								

• SPECIALTY ITEM

FILE NAME = S:\JOL\16328-63PN\63146\PDD\Micro\CADD Sheets\6DW13-sht-500.dgn

STRAND ASSOCIATES
1170 SOUTH HOLBROOK ROAD
JOLIET, ILLINOIS 60431
(815) 744-4200

USER NAME = BillP	DESIGNED - JLB	REVISED -	
MODEL NAME = Default	DRAWN - DJW	REVISED -	
PLOT SCALE = 2.0000 ' / in.	CHECKED - BMA	REVISED -	
PLOT DATE = 12/23/2013	DATE - 12/17/13	REVISED -	

STATE OF ILLINOIS
DEPARTMENT OF TRANSPORTATION

SUMMARY OF QUANTITIES

SCALE: | SHEET OF SHEETS | STA. TO STA.

F.A. RTE.	SECTION	COUNTY	TOTAL SHEETS	SHEET NO.
575	14-N	WILL	163	9

CONTRACT NO. 60W13

ILLINOIS FED. AID PROJECT

	CODE NO.	ITEM	UNIT	TOTAL QUANTITY	CONSTRUCTION CODE								
					80% FED 20% STATE	100% STATE	80% FED 20% STATE	80% FED 20% STATE	80% FED 10% STATE 10% JOLIET	100% JOLIET	100% JOLIET	80% FED 20% STATE	80% FED 20% STATE
					ROADWAY 0004	ROADWAY 0004	TRAFFIC SIGNALS 0021			EVP 0021		INTER-CONNECT 0021	STREET LIGHTING 0021
							RAMP B	RAMP D	VOYAGER LN.	RAMP B	RAMP D		
					URBAN	URBAN	URBAN	URBAN	URBAN	URBAN	URBAN	URBAN	URBAN
*	73700100	REMOVE GROUND MOUNTED SIGN SUPPORT	EACH	29	29								
*	73700200	REMOVE CONCRETE FOUNDATION - GROUND MOUNT	EACH	16	16								
•	78005100	EPOXY PAVEMENT MARKING - LETTERS AND SYMBOLS	SQ FT	37	37								
•	78005130	EPOXY PAVEMENT MARKING - LINE 6"	FOOT	532	532								
•	78005180	EPOXY PAVEMENT MARKING - LINE 24"	FOOT	23	23								
•	78008200	POLYUREA PAVEMENT MARKING TYPE I - LETTERS AND SYMBOLS	SQ FT	546	546								
•	78008210	POLYUREA PAVEMENT MARKING TYPE I - LINE 4"	FOOT	3,288	3,288								
•	78008230	POLYUREA PAVEMENT MARKING TYPE I - LINE 6"	FOOT	1,956	1,956								
•	78008240	POLYUREA PAVEMENT MARKING TYPE I - LINE 8"	FOOT	284	284								
•	78008250	POLYUREA PAVEMENT MARKING TYPE I - LINE 12"	FOOT	73	73								
•	78008270	POLYUREA PAVEMENT MARKING TYPE I - LINE 24"	FOOT	187	187								
•	78100100	RAISED REFLECTIVE PAVEMENT MARKER	EACH	24	24								
•	78100300	REPLACEMENT REFLECTOR	EACH	18	18								
•	78200530	BARRIER WALL MARKERS, TYPE C	EACH	50	50								

• SPECIALTY ITEM

FILE NAME = S:\JOL\6208-6379\6246\DGN\Micro\CADD Sheets\60W13-sht-500.dgn

STRAND ASSOCIATES
1170 SOUTH HOLBROOK ROAD
JOLIET, ILLINOIS 60431
(815) 744-4200

USER NAME = BillP	DESIGNED - JLB	REVISED -	
MODEL NAME = Default	DRAWN - DJW	REVISED -	
PLOT SCALE = 2.0000 ' / in.	CHECKED - BMA	REVISED -	
PLOT DATE = 12/23/2013	DATE - 12/17/13	REVISED -	

STATE OF ILLINOIS
DEPARTMENT OF TRANSPORTATION

SUMMARY OF QUANTITIES

SCALE: | SHEET OF SHEETS | STA. TO STA.

F.A. RTE.	SECTION	COUNTY	TOTAL SHEETS	SHEET NO.
575	14-N	WILL	163	10
		CONTRACT NO. 60W13		
		ILLINOIS FED. AID PROJECT		

					CONSTRUCTION CODE								
					80% FED 20% STATE	100% STATE	80% FED 20% STATE	80% FED 20% STATE	80% FED 10% STATE 10% JOLIET	100% JOLIET	100% JOLIET	80% FED 20% STATE	80% FED 20% STATE
					ROADWAY 0004	ROADWAY 0004	RAMP B	RAMP D	VOYAGER LN.	RAMP B	RAMP D	INTER-CONNECT 0021	STREET LIGHTING 0021
							TRAFFIC SIGNALS 0021			EVP 0021			
	CODE NO.	ITEM	UNIT	TOTAL QUANTITY	URBAN	URBAN	URBAN	URBAN	URBAN	URBAN	URBAN	URBAN	URBAN
	78300100	PAVEMENT MARKING REMOVAL	SQ FT	468	468								
	78300200	RAISED REFLECTIVE PAVEMENT MARKER REMOVAL	EACH	2	2								
*	80400100	ELECTRIC SERVICE INSTALLATION	EACH	1									1
*	80400200	ELECTRIC UTILITY SERVICE CONNECTION	L SUM	1									1
*	80500020	SERVICE INSTALLATION - POLE MOUNTED	EACH	2			1	1					
*	81028200	UNDERGROUND CONDUIT, GALVANIZED STEEL, 2" DIA.	FOOT	6,865			1,005	951				4,909	
*	81028210	UNDERGROUND CONDUIT, GALVANIZED STEEL, 2 1/2" DIA.	FOOT	295			107	188					
*	81028220	UNDERGROUND CONDUIT, GALVANIZED STEEL, 3" DIA.	FOOT	1,103			120	102					881
*	81028240	UNDERGROUND CONDUIT, GALVANIZED STEEL, 4" DIA.	FOOT	849			519	330					
*	81400100	HANDHOLE	EACH	12			6	6					
*	81400200	HEAVY-DUTY HANDHOLE	EACH	4			2	2					
*	81400300	DOUBLE HANDHOLE	EACH	3			2	1					
*	81603090	UNIT DUCT, 600V, 3-1C NO. 4, 1/C NO. 6 GROUND, (XLP-TYPE USE), 1 1/4" DIA. POLYETHYLENE	FOOT	4,644									4,644
*	81800330	AERIAL CABLE, 3-1/C NO. 6 WITH MESSENGER WIRE	FOOT	2,000									2,000

* SPECIALTY ITEM

FILE NAME = S:\JOL\62020-63996\63946\D20\Micro\CADD Sheets\SUM13-011-SQD.dgn

STRAND ASSOCIATES
1170 SOUTH HOUBOLT ROAD
JOLIET, ILLINOIS 60431
(815) 744-4200

USER NAME = BLIP	DESIGNED - JLB	REVISED -
MODEL NAME = Default	DRAWN - DJW	REVISED -
PLOT SCALE = 2.0000 ' / in.	CHECKED - BMA	REVISED -
PLOT DATE = 12/23/2013	DATE - 12/17/13	REVISED -

STATE OF ILLINOIS
DEPARTMENT OF TRANSPORTATION

SUMMARY OF QUANTITIES

SCALE: | SHEET OF SHEETS | STA. TO STA.

F.A. RTE.	SECTION	COUNTY	TOTAL SHEETS	SHEET NO.
575	14-N	WILL	163	11

CONTRACT NO. 60W13

ILLINOIS FED. AID PROJECT

					CONSTRUCTION CODE								
					80% FED 20% STATE	100% STATE	80% FED 20% STATE	80% FED 20% STATE	80% FED 10% STATE 10% JOLIET	100% JOLIET	100% JOLIET	80% FED 20% STATE	80% FED 20% STATE
					ROADWAY 0004	ROADWAY 0004	RAMP B	RAMP D	VOYAGER LN.	RAMP B	RAMP D	INTER-CONNECT 0021	STREET LIGHTING 0021
							TRAFFIC SIGNALS 0021			EVP 0021			
	CODE NO.	ITEM	UNIT	TOTAL QUANTITY	URBAN	URBAN	URBAN	URBAN	URBAN	URBAN	URBAN	URBAN	URBAN
•	82102400	LUMINAIRE, SODIUM VAPOR, HORIZONTAL MOUNT, 400 WATT	EACH	6									6
•	82500420	LIGHTING CONTROLLER, BASE MOUNTED, 480VOLT, 200AMP (DUAL)	EACH	1									1
•	83050810	LIGHT POLE, ALUMINUM, 47.5 FT. M.H., 15 FT. MAST ARM	EACH	4									4
•	83057355	LIGHT POLE, WOOD, 60 FOOT, CLASS 4, WITH 15FT MAST ARM	EACH	9									9
•	83600200	LIGHT POLE FOUNDATION, 24" DIAMETER	FOOT	120									120
•	83800205	BREAKAWAY DEVICE, TRANSFORMER BASE, 15 INCH BOLT CIRCLE	EACH	12									12
•	84100110	REMOVAL OF TEMPORARY LIGHTING UNIT	EACH	8									8
•	84200804	REMOVAL OF POLE FOUNDATION	EACH	8									8
•	84400105	RELOCATE EXISTING LIGHTING UNIT	EACH	8									8
•	84500110	REMOVAL OF LIGHTING CONTROLLER	EACH	1									1
•	84500130	REMOVAL OF LIGHTING CONTROLLER FOUNDATION	EACH	1									1
*	85000200	MAINTENANCE OF EXISTING TRAFFIC SIGNAL INSTALLATION	EACH	4					1			3	
•	86400100	TRANSCEIVER - FIBER OPTIC	EACH	7			1	1	1			4	
•	87300925	ELECTRIC CABLE IN CONDUIT, TRACER, NO. 14 1C	FOOT	6,776								6,776	

• SPECIALTY ITEM

FILE NAME = S:\JOLIET\6380-ILSTP\NEW\ROADWAY\Micros\GHED Sheets\60W13-sht-SUM.dgn

STRAND ASSOCIATES
1170 SOUTH HOUBOLT ROAD
JOLIET, ILLINOIS 60431
(815) 744-4200

USER NAME = BillP	DESIGNED - JLB	REVISED -
MODEL NAME = Default	DRAWN - DJW	REVISED -
PLOT SCALE = 2.0000 ' / in.	CHECKED - BMA	REVISED -
PLOT DATE = 12/23/2013	DATE - 12/17/13	REVISED -

STATE OF ILLINOIS
DEPARTMENT OF TRANSPORTATION

SUMMARY OF QUANTITIES

SCALE: | SHEET OF SHEETS | STA. TO STA.

F.A. RTE.	SECTION	COUNTY	TOTAL SHEETS	SHEET NO.
575	14-N	WILL	163	12
		CONTRACT NO. 60W13		
		ILLINOIS FED. AID PROJECT		

	CODE NO.	ITEM	UNIT	TOTAL QUANTITY	CONSTRUCTION CODE								
					80% FED 20% STATE	100% STATE	80% FED 20% STATE	80% FED 20% STATE	80% FED 10% STATE 10% JOLIET	100% JOLIET	100% JOLIET	80% FED 20% STATE	80% FED 20% STATE
					ROADWAY 0004	ROADWAY 0004	RAMP B	RAMP D	VOYAGER LN.	RAMP B	RAMP D	INTER-CONNECT 0021	STREET LIGHTING 0021
							TRAFFIC SIGNALS 0021			EVP 0021			
					URBAN	URBAN	URBAN	URBAN	URBAN	URBAN	URBAN	URBAN	URBAN
•	87301225	ELECTRIC CABLE IN CONDUIT, SIGNAL NO. 14 3C	FOOT	1,378						678	700		
•	87301245	ELECTRIC CABLE IN CONDUIT, SIGNAL NO. 14 5C	FOOT	4,870			2,310	2,560					
•	87301255	ELECTRIC CABLE IN CONDUIT, SIGNAL NO. 14 7C	FOOT	2,006			1,074	932					
•	87301305	ELECTRIC CABLE IN CONDUIT, LEAD-IN, NO. 14 1 PAIR	FOOT	8,038			3,772	4,266					
•	87301805	ELECTRIC CABLE IN CONDUIT, SERVICE, NO. 6 2 C	FOOT	116			58	58					
•	87301900	ELECTRIC CABLE IN CONDUIT, EQUIPMENT GROUNDING CONDUCTOR, NO. 6 1C	FOOT	1,780			842	938					
•	87302245	ELECTRIC CABLE AERIAL SUSPENDED, SIGNAL, NO. 14 5C	FOOT	1,227			1,227						
•	87302255	ELECTRIC CABLE AERIAL SUSPENDED, SIGNAL, NO. 14 7C	FOOT	901			901						
•	87302505	ELECTRIC CABLE AERIAL SUSPENDED, SERVICE, NO. 6 2C	FOOT	90			90						
•	87502480	TRAFFIC SIGNAL POST, GALVANIZED STEEL 14 FT.	EACH	7			4	3					
•	87502490	TRAFFIC SIGNAL POST, GALVANIZED STEEL 15 FT.	EACH	1				1					
•	87502500	TRAFFIC SIGNAL POST, GALVANIZED STEEL 16 FT.	EACH	2				2					
•	87700160	STEEL MAST ARM ASSEMBLY AND POLE, 24 FT.	EACH	1			1						
•	87700180	STEEL MAST ARM ASSEMBLY AND POLE, 28 FT.	EACH	1				1					

• SPECIALTY ITEM

FILE NAME = S:\JOL\60300-63995\63460\800\Micro\CADD Sheets\60W13-sn-500.dgn

STRAND ASSOCIATES
1170 SOUTH HOUBOLT ROAD
JOLIET, ILLINOIS 60431
(815) 744-4200

USER NAME = BillP	DESIGNED - JLB	REVISED -
MODEL NAME = Defaults	DRAWN - DJW	REVISED -
PLOT SCALE = 2.0000 ' / in.	CHECKED - BMA	REVISED -
PLOT DATE = 12/23/2013	DATE - 12/17/13	REVISED -

STATE OF ILLINOIS
DEPARTMENT OF TRANSPORTATION

SUMMARY OF QUANTITIES

SCALE: | SHEET OF SHEETS | STA. TO STA.

F.A. RTE.	SECTION	COUNTY	TOTAL SHEETS	SHEET NO.
575	14-N	WILL	163	13

CONTRACT NO. 60W13

ILLINOIS FED. AID PROJECT

					CONSTRUCTION CODE								
					80% FED 20% STATE	100% STATE	80% FED 20% STATE	80% FED 20% STATE	80% FED 10% STATE 10% JOLIET	100% JOLIET	100% JOLIET	80% FED 20% STATE	80% FED 20% STATE
					ROADWAY 0004	ROADWAY 0004	RAMP B	RAMP D	VOYAGER LN.	RAMP B	RAMP D	INTER-CONNECT 0021	STREET LIGHTING 0021
							TRAFFIC SIGNALS 0021			EVP 0021			
	CODE NO.	ITEM	UNIT	TOTAL QUANTITY	URBAN	URBAN	URBAN	URBAN	URBAN	URBAN	URBAN	URBAN	URBAN
•	87700200	STEEL MAST ARM ASSEMBLY AND POLE, 32 FT.	EACH	1			1						
•	87700230	STEEL MAST ARM ASSEMBLY AND POLE, 38 FT.	EACH	1				1					
•	87700260	STEEL MAST ARM ASSEMBLY AND POLE, 44 FT.	EACH	2			1	1					
•	87702310	STEEL MAST ARM ASSEMBLY AND POLE WITH DUAL MAST ARMS, 24 FT. AND 36 FT.	EACH	1			1						
•	87800100	CONCRETE FOUNDATION, TYPE A	FOOT	40			16	24					
•	87800150	CONCRETE FOUNDATION, TYPE C	FOOT	8			4	4					
•	87800400	CONCRETE FOUNDATION, TYPE E 30-INCH DIAMETER	FOOT	20			10	10					
•	87800415	CONCRETE FOUNDATION, TYPE E 36-INCH DIAMETER	FOOT	60			36	24					
•	87900200	DRILL EXISTING HANDHOLE	EACH	22								22	
•	88030020	SIGNAL HEAD, LED, 1-FACE, 3-SECTION, MAST-ARM MOUNTED	EACH	13			7	6					
•	88030050	SIGNAL HEAD, LED, 1-FACE, 3-SECTION, BRACKET MOUNTED	EACH	7			4	3					
•	88030070	SIGNAL HEAD, LED, 1-FACE, 4-SECTION, BRACKET MOUNTED	EACH	1				1					
•	88030100	SIGNAL HEAD, LED, 1-FACE, 5-SECTION, BRACKET MOUNTED	EACH	2				2					
•	88030110	SIGNAL HEAD, LED, 1-FACE, 5-SECTION, MAST-ARM MOUNTED	EACH	6			4	2					

• SPECIALTY ITEM

FILE NAME = S:\JOLI63380-63PM\63346\PROJ\Micro\CADD Sheets\60W13-ss-500.dgn

STRAND ASSOCIATES
1170 SOUTH HOUBOLT ROAD
JOLIET, ILLINOIS 60431
(815) 744-4200

USER NAME = BillP	DESIGNED - JLB	REVISED -	
MODEL NAME = Default	DRAWN - DJW	REVISED -	
PLOT SCALE = 2.0000 ' / in.	CHECKED - BMA	REVISED -	
PLOT DATE = 12/23/2013	DATE - 12/17/13	REVISED -	

STATE OF ILLINOIS
DEPARTMENT OF TRANSPORTATION

SUMMARY OF QUANTITIES

SCALE: | SHEET OF SHEETS | STA. TO STA.

F.A. RTE.	SECTION	COUNTY	TOTAL SHEETS	SHEET NO.
575	14-N	WILL	163	14
		CONTRACT NO. 60W13		
		ILLINOIS FED. AID PROJECT		

				CONSTRUCTION CODE								
				80% FED 20% STATE	100% STATE	80% FED 20% STATE	80% FED 20% STATE	80% FED 10% STATE 10% JOLIET	100% JOLIET	100% JOLIET	80% FED 20% STATE	80% FED 20% STATE
				ROADWAY 0004	ROADWAY 0004	RAMP B	RAMP D	VOYAGER LN.	RAMP B	RAMP D	INTER-CONNECT 0021	STREET LIGHTING 0021
						TRAFFIC SIGNALS 0021			EVP 0021			
CODE NO.	ITEM	UNIT	TOTAL QUANTITY	URBAN	URBAN	URBAN	URBAN	URBAN	URBAN	URBAN	URBAN	URBAN
• 88030210	SIGNAL HEAD, LED, 2-FACE, 3-SECTION, BRACKET MOUNTED	EACH	1				1					
• 88200210	TRAFFIC SIGNAL BACKPLATE, LOUVERED, ALUMINUM	EACH	19			11	8					
• 88500100	INDUCTIVE LOOP DETECTOR	EACH	24			13	11					
• 88600100	DETECTOR LOOP, TYPE I	FOOT	1,359			826	533					
• 88600700	PREFORMED DETECTOR LOOP	FOOT	266			145	121					
• 88700200	LIGHT DETECTOR	EACH	6						3	3		
• 88700300	LIGHT DETECTOR AMPLIFIER	EACH	2						1	1		
• 89000100	TEMPORARY TRAFFIC SIGNAL INSTALLATION	EACH	2			1	1					
• 89502200	MODIFY EXISTING CONTROLLER	EACH	1					1				
• 89502210	MODIFY EXISTING CONTROLLER CABINET	EACH	1					1				
* 89502300	REMOVE ELECTRIC CABLE FROM CONDUIT	FOOT	872								872	
* 89502375	REMOVE EXISTING TRAFFIC SIGNAL EQUIPMENT	EACH	2			1	1					
* 89502380	REMOVE EXISTING HANDHOLE	EACH	17			8	9					
* 89502382	REMOVE EXISTING DOUBLE HANDHOLE	EACH	2			1	1					

• SPECIALTY ITEM

FILE NAME = S:\JOL\63201-63991\63146\850\Victoria\CE001 Sheets\E2GW13-ANC-SOQ.dgn

STRAND ASSOCIATES
1170 SOUTH HOUBOLT ROAD
JOLIET, ILLINOIS 60431
(815) 744-4200

USER NAME = BillP	DESIGNED - JLB	REVISED -
MODEL NAME = Default	DRAWN - DJW	REVISED -
PLOT SCALE = 2.0000 ' / in.	CHECKED - BMA	REVISED -
PLOT DATE = 12/23/2013	DATE - 12/17/13	REVISED -

STATE OF ILLINOIS
DEPARTMENT OF TRANSPORTATION

SUMMARY OF QUANTITIES

SCALE: | SHEET OF SHEETS | STA. TO STA.

F.A. RTE.	SECTION	COUNTY	TOTAL SHEETS	SHEET NO.
575	14-N	WILL	163	15

CONTRACT NO. 60W13

ILLINOIS FED. AID PROJECT

	CODE NO.	ITEM	UNIT	TOTAL QUANTITY	CONSTRUCTION CODE								
					80% FED 20% STATE	100% STATE	80% FED 20% STATE	80% FED 20% STATE	80% FED 10% STATE 10% JOLIET	100% JOLIET	100% JOLIET	80% FED 20% STATE	80% FED 20% STATE
					ROADWAY 0004	ROADWAY 0004	RAMP B	RAMP D	VOYAGER LN.	RAMP B	RAMP D	INTER-CONNECT 0021	STREET LIGHTING 0021
							TRAFFIC SIGNALS 0021			EVP 0021			
					URBAN	URBAN	URBAN	URBAN	URBAN	URBAN	URBAN	URBAN	URBAN
*	89502385	REMOVE EXISTING CONCRETE FOUNDATION	EACH	14			7	7					
•	X0324085	EMERGENCY VEHICLE PRIORITY SYSTEM LINE SENSOR CABLE, NO. 20 3/C	FOOT	1,378						678	700		
	X0326767	PROFILE DIAMOND GRINDING CONCRETE PAVEMENT	SQ YD	616	616								
•	X0327349	TEMPORARY WOOD POLE, 40 FT., CLASS 4	EACH	2									2
	X2511630	EROSION CONTROL BLANKET (SPECIAL)	SQ YD	2,875	2,875								
	X5537800	STORM SEWERS TO BE CLEANED 12"	FOOT	29		29							
	X5538000	STORM SEWERS TO BE CLEANED 18"	FOOT	75		75							
	X5538200	STORM SEWERS TO BE CLEANED 24"	FOOT	119		119							
	X7011015	TRAFFIC CONTROL AND PROTECTION (EXPRESSWAYS)	L SUM	1	1								
•	X8210040	TEMPORARY LUMINAIRE, HIGH PRESSURE SODIUM VAPOR, 400 WATT HORIZONTAL MOUNT	EACH	9									9
•	X8570215	FULL-ACTUATED CONTROLLER IN EXISTING CABINET	EACH	1					1				
•	X8570226	FULL-ACTUATED CONTROLLER AND TYPE IV CABINET, SPECIAL	EACH	2			1	1					
•	X8620200	UNINTERRUPTABLE POWER SUPPLY, SPECIAL	EACH	3			1	1	1				
•	X8710024	FIBER OPTIC CABLE IN CONDUIT, NO. 62.5/125, MM12F SM24F	FOOT	6,895								6,895	

• SPECIALTY ITEM

FILE NAME = S:\JOB\6320-6399\6346\DGN\Micro\CAD Sheets\6W13-sht-500.dgn

STRAND ASSOCIATES 1170 SOUTH HOUBOLT ROAD JOLIET, ILLINOIS 60431 (815) 744-4200

USER NAME = BillP	DESIGNED - JLB	REVISED -	
MODEL NAME = Default	DRAWN - DJW	REVISED -	
PLOT SCALE = 2.2222 ' / in.	CHECKED - BMA	REVISED -	
PLOT DATE = 12/23/2013	DATE - 12/17/13	REVISED -	

STATE OF ILLINOIS
DEPARTMENT OF TRANSPORTATION

SUMMARY OF QUANTITIES

SCALE: | SHEET OF SHEETS | STA. TO STA.

F.A. RTE.	SECTION	COUNTY	TOTAL SHEETS	SHEET NO.
575	14-N	WILL	163	16
		CONTRACT NO. 60W13		
		ILLINOIS FED. AID PROJECT		

				CONSTRUCTION CODE								
				80% FED 20% STATE	100% STATE	80% FED 20% STATE	80% FED 20% STATE	80% FED 10% STATE 10% JOLIET	100% JOLIET	100% JOLIET	80% FED 20% STATE	80% FED 20% STATE
				ROADWAY 0004	ROADWAY 0004	RAMP B	RAMP D	VOYAGER LN.	RAMP B	RAMP D	INTER-CONNECT 0021	STREET LIGHTING 0021
						TRAFFIC SIGNALS 0021			EVP 0021			
CODE NO.	ITEM	UNIT	TOTAL QUANTITY	URBAN	URBAN	URBAN	URBAN	URBAN	URBAN	URBAN	URBAN	URBAN
• X8800025	SIGNAL HEAD ,LED, 1-FACE, 3-SECTION, SPAN WIRE MOUNTED	EACH	7			7						
• X8800041	SIGNAL HEAD ,LED, 1-FACE 4-SECTION, SPAN WIRE MOUNTED	EACH	3			3						
• X8800046	SIGNAL HEAD ,LED, 1-FACE 5-SECTION, SPAN WIRE MOUNTED	EACH	2			2						
• X8950060	REMOVE EXISTING CONTROLLER	EACH	1					1				
• Z0013798	CONSTRUCTION LAYOUT	L SUM	1	1								
• Z0030850	TEMPORARY INFORMATION SIGNING	SQ FT	52	52								
• Z0033020	LUMINAIRE SAFETY CABLE ASSEMBLY	EACH	6									6
• Z0033028	MAINTENANCE OF LIGHTING SYSTEM	CAL MO	4									4
• Z0033056	OPTIMIZE TRAFFIC SIGNAL SYSTEM	EACH	1								1	
• Z0073510	TEMPORARY TRAFFIC SIGNAL TIMING	EACH	2			1	1					
X0327695	PRECAST CONCRETE PAVEMENT SLABS 9 3/4"	SQ FT	5,044	5,044								
* 66900200	NON-SPECIAL WASTE DISPOSAL	CU YD	2,100	2,100								
* 66900450	SPECIAL WASTE PLANS AND REPORTS	L SUM	1	1								
* 66900530	SOIL DISPOSAL ANALYSIS	EACH	2	2								

* SPECIALTY ITEM

FILE NAME = S:\JOL\60303-ESPTY\6016\BDS\Misc\ai\C4103 Sheets\60W13-sht-S00.dgn

STRAND ASSOCIATES 1370 SOUTH HOUBOLT ROAD JOLIET, ILLINOIS 60431 (815) 744-4200

USER NAME = BillP	DESIGNED - JLB	REVISED -
MODEL NAME = Default	DRAWN - DJW	REVISED -
PLOT SCALE = 2.0000 ' / in.	CHECKED - BMA	REVISED -
PLOT DATE = 12/23/2013	DATE - 12/17/13	REVISED -

STATE OF ILLINOIS
DEPARTMENT OF TRANSPORTATION

SUMMARY OF QUANTITIES

SCALE: | SHEET OF SHEETS | STA. TO STA.

F.A. RTE.	SECTION	COUNTY	TOTAL SHEETS	SHEET NO.
575	14-N	WILL	163	17
		CONTRACT NO. 60W13		
		ILLINOIS FED. AID PROJECT		

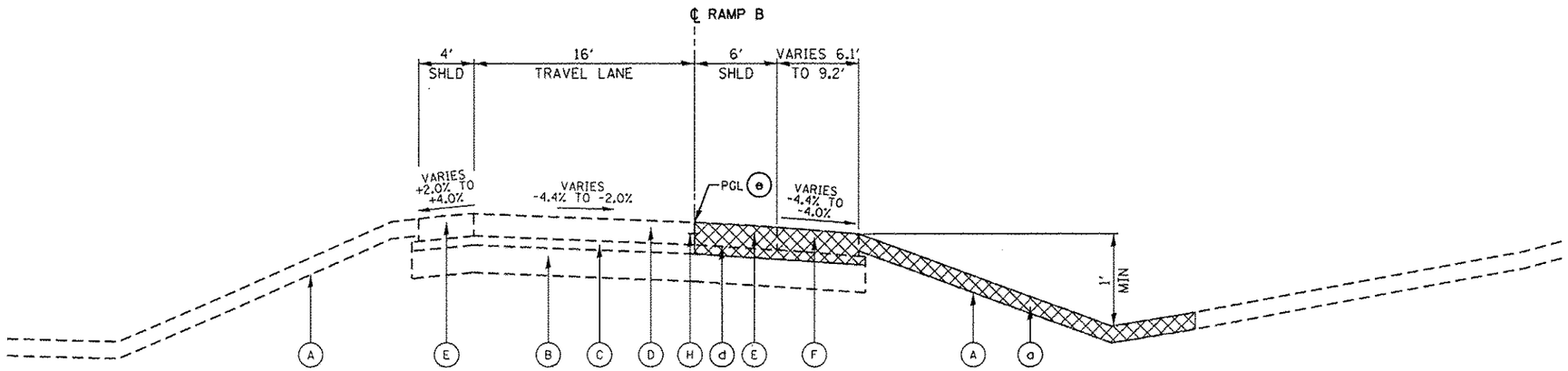

EXISTING RAMP "B"

STA 13+90.00 TO STA 15+90.00

EXISTING LEGEND

- (A) 12" TOP SOIL
- (B) 12" AGGREGATE SUBGRADE IMPROVEMENT
- (C) 4" STABILIZED SUBBASE - HOT-MIX ASPHALT
- (D) 9 3/4" PCC PAVEMENT
- (E) 9 3/4" PCC SHOULDERS
- (F) 9 3/4" AGGREGATE SHOULDERS
- (G) COMB. CONCETE CURB AND GUTTER, B-6.24
- (H) TIE BARS
- (I) TURF MEDIAN

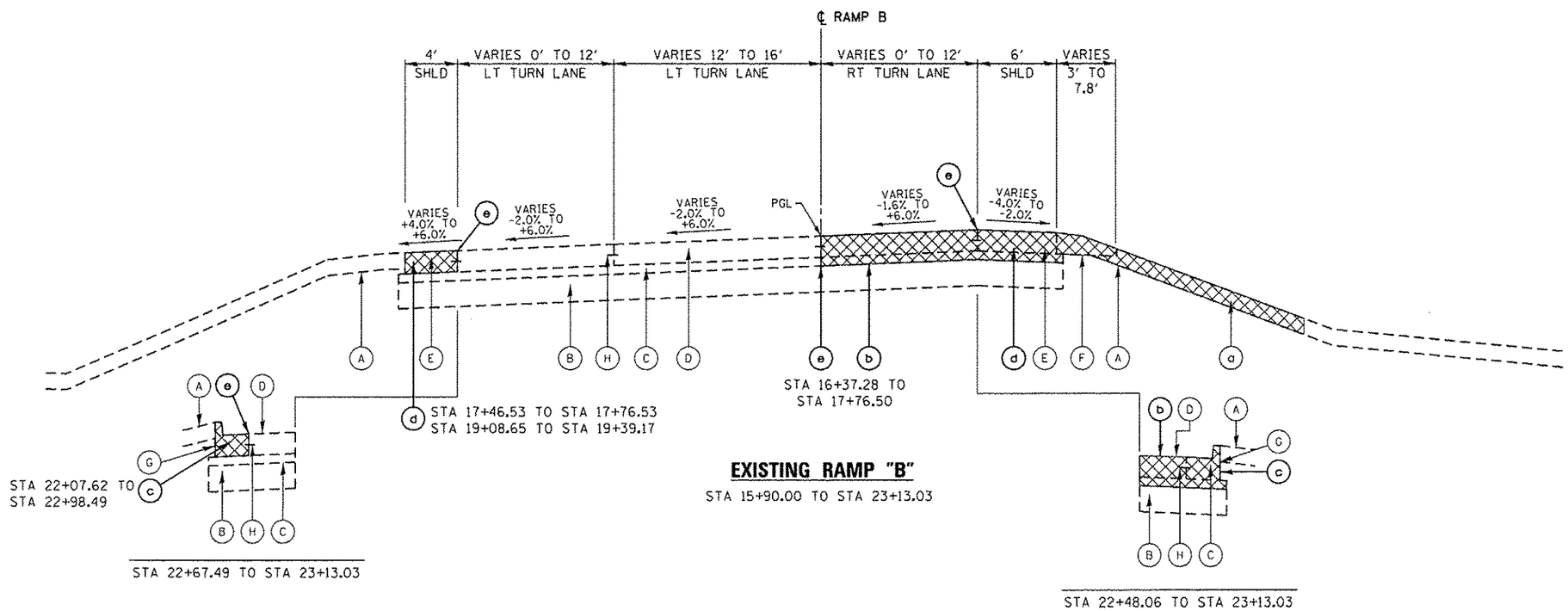

EXISTING RAMP "B"

STA 15+90.00 TO STA 23+13.03

REMOVAL LEGEND

- (a) TOP SOIL EXCAVATION
- (b) PAVEMENT REMOVAL
- (c) COMB. CURB & GUTTER REMOVAL
- (d) PAVED SHOULDER REMOVAL
- (e) SAW CUTS (INCIDENTAL)

REMOVAL ITEMS

NOTE:

SEE REMOVAL SHEETS FOR LOCATIONS OF PAVEMENT REMOVAL FOR PRECAST CONCRETE PAVEMENT SLABS.

FILE NAME = S:\JOL\6288-6299\6346\095\Micros\CADD Sheets\60W13-sht-typical.dgn

STRAND ASSOCIATES® 1170 SOUTH HOUBOLT ROAD JOLIET, ILLINOIS 60431 (815) 744-4200	USER NAME = dennisw	DESIGNED - JLB	REVISED -	STATE OF ILLINOIS DEPARTMENT OF TRANSPORTATION	TYPICAL SECTIONS	F.A.P. RTE. 575	SECTION 14-N	COUNTY WILL	TOTAL SHEETS 163 / SHEET NO. 18
	MODEL NAME = DeFault	DRAWN - DJW	REVISED -					CONTRACT NO. 60W13	
	PLOT SCALE = 10.0000 ' / in.	CHECKED - BMA	REVISED -						
	PLOT DATE = 12/18/2013	DATE - 12/17/13	REVISED -		SCALE: NTS SHEET 1 OF 7 SHEETS STA. TO STA.		ILLINOIS FED. AID PROJECT		

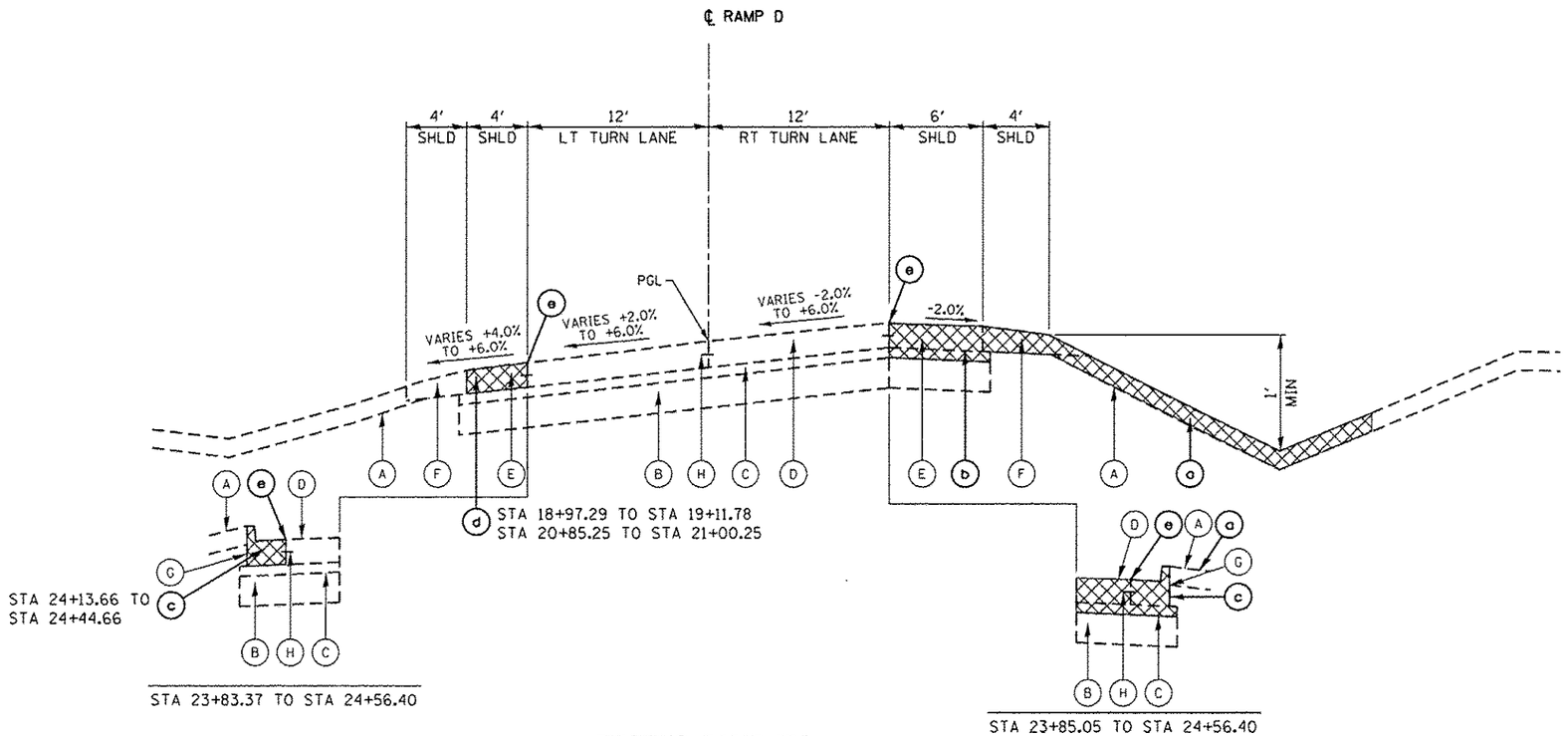

EXISTING RAMP "D"

STA 17+62.50 TO STA 24+56.40

EXISTING LEGEND

- (A) 12" TOP SOIL
- (B) 12" AGGREGATE SUBGRADE IMPROVEMENT
- (C) 4" STABILIZED SUBBASE - HOT-MIX ASPHALT
- (D) 9 3/4" PCC PAVEMENT
- (E) 9 3/4" PCC SHOULDERS
- (F) 9 3/4" AGGREGATE SHOULDERS
- (G) COMB. CONCETE CURB AND GUTTER, B-6.24
- (H) TIE BARS
- (I) TURF MEDIAN

REMOVAL LEGEND

- (a) TOP SOIL EXCAVATION
- (b) PAVEMENT REMOVAL
- (c) COMB. CURB & GUTTER REMOVAL
- (d) PAVED SHOULDER REMOVAL
- (e) SAW CUTS (INCIDENTAL)

REMOVAL ITEMS

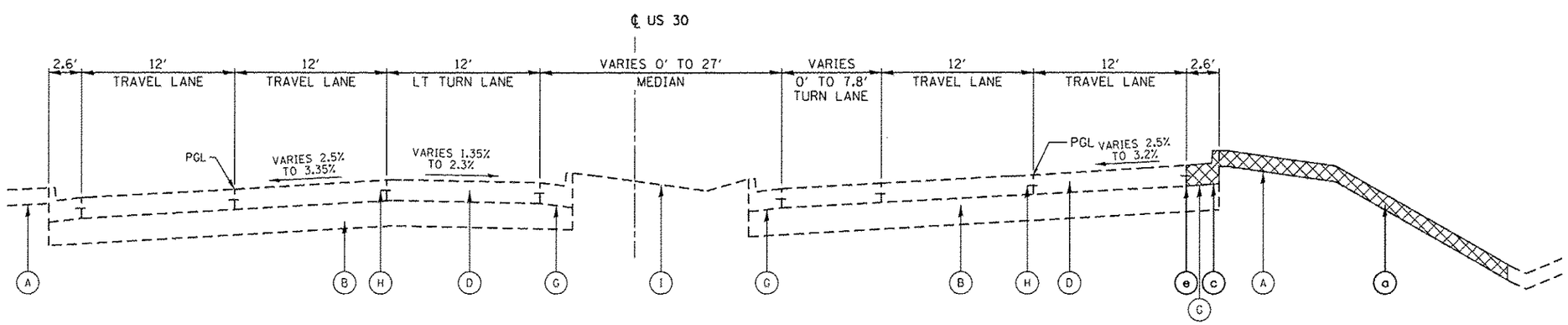

EXISTING US ROUTE 30

STA 3642+15.91 TO STA 3644+17.19

NOTE:

SEE REMOVAL SHEETS FOR LOCATIONS OF PAVEMENT REMOVAL FOR PRECAST CONCRETE PAVEMENT SLABS.

FILE NAME = S:\JOL\6320-6399\6346\DGN\Micro\CADD Sheets\60W13-ex-typical.dgn

STRAND ASSOCIATES 1170 SOUTH HOUBOLT ROAD JOLIET, ILLINOIS 60431 (815) 744-4200	USER NAME = dennisw	DESIGNED - JLB	REVISED -	STATE OF ILLINOIS DEPARTMENT OF TRANSPORTATION	TYPICAL SECTIONS	F.A.P. RTE.	SECTION	COUNTY	TOTAL SHEETS / SHEET NO.
	MODEL NAME = Default	DRAWN - DJW	REVISED -			575	14-N	WILL	163 / 19
	PLOT SCALE = 10.0000 ' / in.	CHECKED - BMA	REVISED -					CONTRACT NO. 60W13	
	PLOT DATE = 12/18/2013	DATE - 12/17/13	REVISED -		SCALE: NTS / SHEET 2 OF 7 SHEETS / STA. TO STA.			ILLINOIS FED. AID PROJECT	

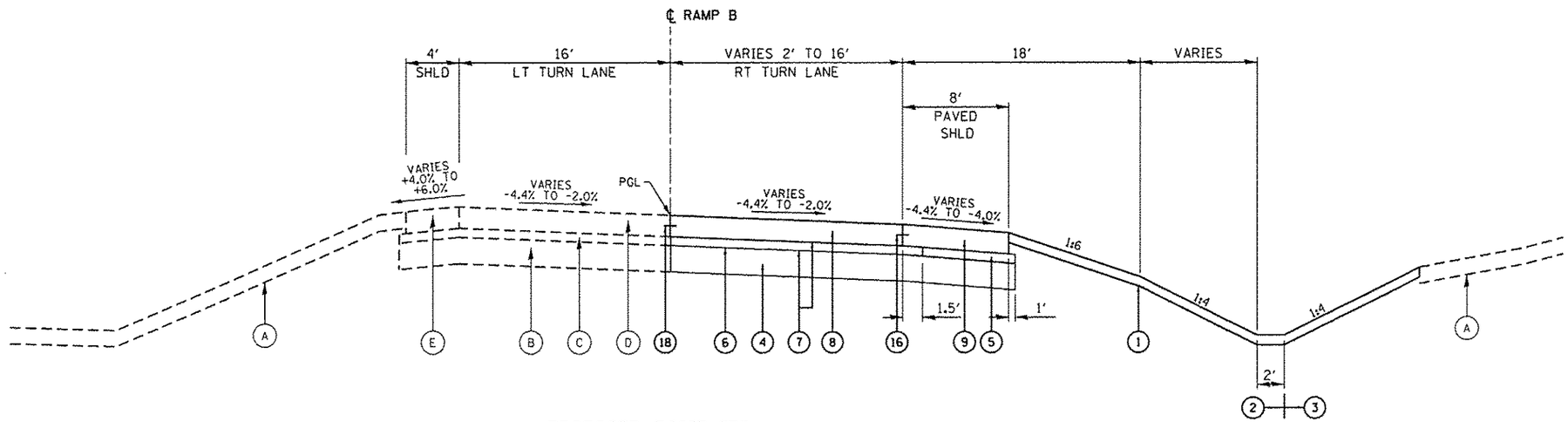

PROPOSED RAMP "B"

STA 13+90.00 TO STA 15+90.00

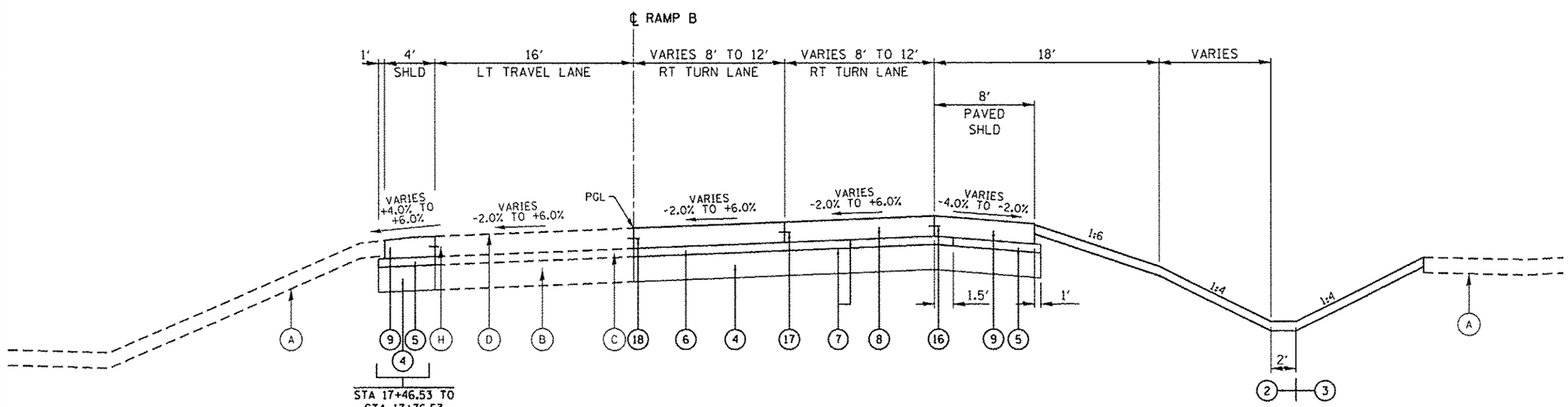

PROPOSED RAMP "B"

STA 15+90.00 TO STA 18+40.00

PROPOSED LEGEND

1. 4" TOPSOIL PLACEMENT
2. SEEDING, CLASS 2A
3. SEEDING, CLASS 4
4. AGGREGATE SUBGRADE IMPROVEMENT 12"
5. SUBBASE GRANULAR MATERIAL, TYPE C 4"
6. STABILIZED SUBBASE - HOT-MIX ASPHALT, 4"
7. BITUMINOUS MATERIALS (PRIME COAT)
8. PORTLAND CEMENT CONCRETE PAVEMENT 9 3/4" (JOINTED)
9. PORTLAND CEMENT CONCRETE SHOULDERS 9 3/4"
10. PIPE UNDERDRAINS 6"
11. COMBINATION CONCRETE CURB AND GUTTER, TYPE B-6.24
12. COMBINATION CONCRETE CURB AND GUTTER, TYPE B-6.24 (ABUTTING EXISTING PAVEMENT)
13. COMBINATION CONCRETE CURB AND GUTTER, TYPE M-6.06
14. COMBINATION CONCRETE CURB AND GUTTER, TYPE M-6.24 (ABUTTING EXISTING PAVEMENT)
15. CONCRETE MEDIAN SURFACE, 4 INCH
16. LONGITUDINAL CONSTRUCTION JOINT DRILL AND GROUT #6 TIE BARS 30" LONG AT 18" CTS
17. LONGITUDINAL SAWED JOINT #6 TIE BARS 36" LONG AT 18" CTS
18. LONGITUDINAL CONSTRUCTION JOINT DRILL AND GROUT #8 TIE BARS 30" LONG AT 18" CTS
19. CLASS SI CONCRETE (OUTLET)

NOTE:

SEE ROADWAY PLAN AND PROFILE SHEETS FOR LOCATIONS OF PRECAST CONCRETE PAVEMENT SLABS.

DENOTES WORK INCLUDED IN THE COST OF OTHER ITEMS.

EXISTING LEGEND

- A 12" TOP SOIL
- B 12" AGGREGATE SUBGRADE IMPROVEMENT
- C 4" STABILIZED SUBBASE - HOT-MIX ASPHALT
- D 9 3/4" PCC PAVEMENT
- E 9 3/4" PCC SHOULDERS
- F 9 3/4" AGGREGATE SHOULDERS
- G COMB. CONCETE CURB AND GUTTER, B-6.24
- H TIE BARS
- I TURF MEDIAN

FILE NAME = S:\JOB\6288--6399\6246\DESIGN\Micro\CADD Sheets\60W13-sht-typical.dgn

STRAND ASSOCIATES 1170 SOUTH HOUBOLT ROAD JOLIET, ILLINOIS 60431 (815) 744-4200	USER NAME = dennisw	DESIGNED - JLB	REVISED -	STATE OF ILLINOIS DEPARTMENT OF TRANSPORTATION	TYPICAL SECTIONS	F.A.P. RTE.	SECTION	COUNTY	TOTAL SHEETS	SHEET NO.
	MODEL NAME = Default	DRAWN - DJW	REVISED -			575	14-N	WILL	163	20
	PLOT SCALE = 10.0000 ' / in.	CHECKED - BMA	REVISED -					CONTRACT NO. 60W13		
	PLOT DATE = 12/18/2013	DATE - 12/17/13	REVISED -		SCALE: NTS SHEET 3 OF 7 SHEETS STA. TO STA.			ILLINOIS FED. AID PROJECT		

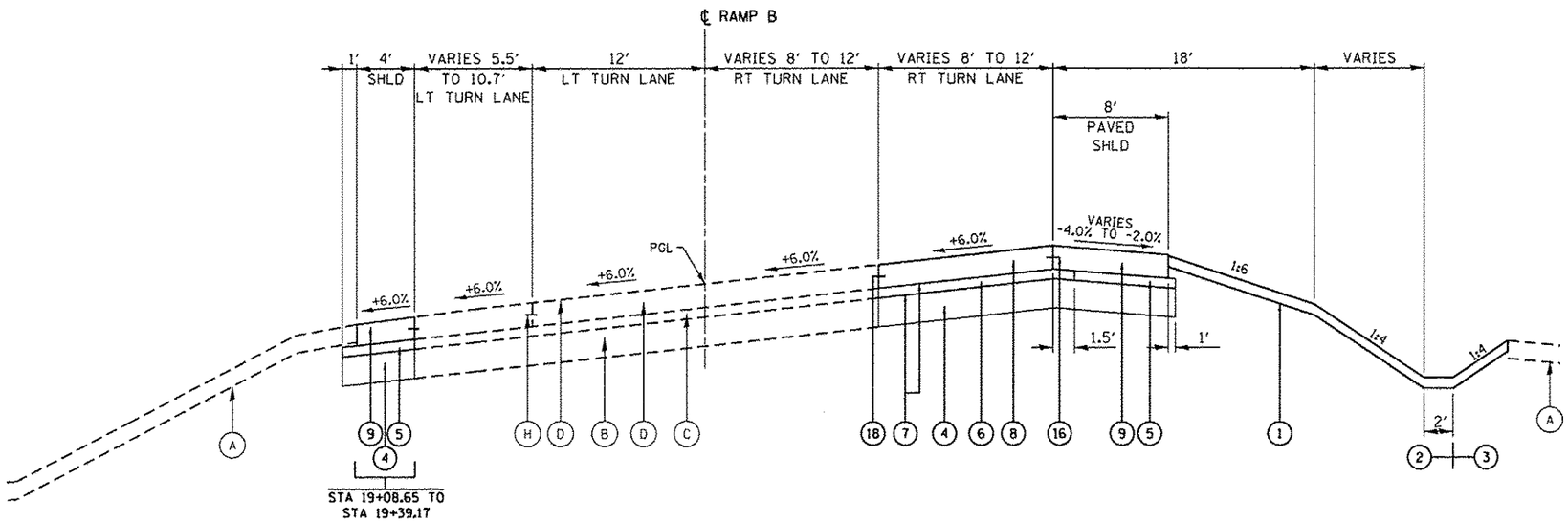

PROPOSED RAMP "B"

STA 18+40.00 TO STA 20+50.00

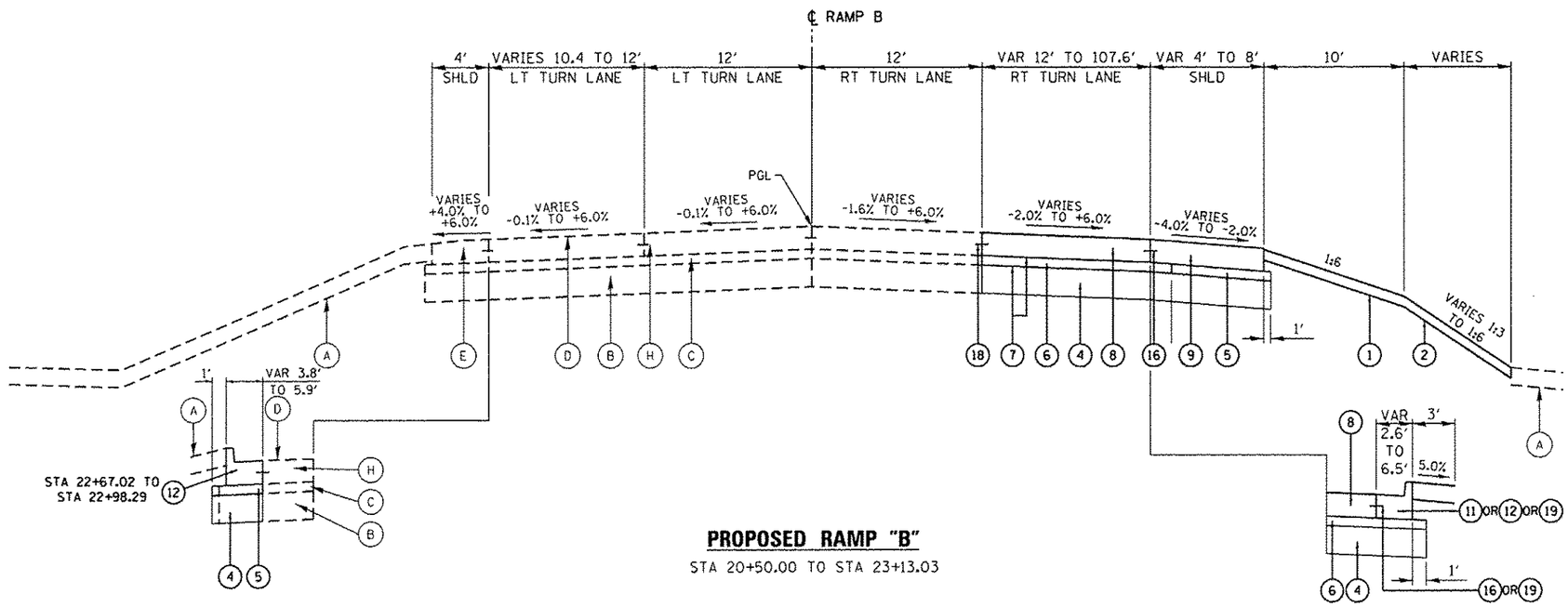

PROPOSED RAMP "B"

STA 20+50.00 TO STA 23+13.03

STA 22+67.49 TO STA 23+13.03

STA 21+92.80 TO STA 23+13.03

PROPOSED LEGEND

1. 4" TOPSOIL PLACEMENT
2. SEEDING, CLASS 2A
3. SEEDING, CLASS 4
4. AGGREGATE SUBGRADE IMPROVEMENT 12"
5. SUBBASE GRANULAR MATERIAL, TYPE C 4"
6. STABILIZED SUBBASE - HOT-MIX ASPHALT, 4"
7. BITUMINOUS MATERIALS (PRIME COAT)
8. PORTLAND CEMENT CONCRETE PAVEMENT 9 3/4" (JOINTED)
9. PORTLAND CEMENT CONCRETE SHOULDERS 9 3/4"
10. PIPE UNDERDRAINS 6"
11. COMBINATION CONCRETE CURB AND GUTTER, TYPE B-6.24
12. COMBINATION CONCRETE CURB AND GUTTER, TYPE B-6.24 (ABUTTING EXISTING PAVEMENT)
13. COMBINATION CONCRETE CURB AND GUTTER, TYPE M-6.06
14. COMBINATION CONCRETE CURB AND GUTTER, TYPE M-6.24 (ABUTTING EXISTING PAVEMENT)
15. CONCRETE MEDIAN SURFACE, 4 INCH
16. LONGITUDINAL CONSTRUCTION JOINT DRILL AND GROUT #6 TIE BARS 30" LONG AT 18" CTS
17. LONGITUDINAL SAWED JOINT #6 TIE BARS 36" LONG AT 18" CTS
18. LONGITUDINAL CONSTRUCTION JOINT DRILL AND GROUT #8 TIE BARS 30" LONG AT 18" CTS
19. CLASS SI CONCRETE (OUTLET)

NOTE:

SEE ROADWAY PLAN AND PROFILE SHEETS FOR LOCATIONS OF PRECAST CONCRETE PAVEMENT SLABS.

DENOTES WORK INCLUDED IN THE COST OF OTHER ITEMS.

EXISTING LEGEND

- A 12" TOP SOIL
- B 12" AGGREGATE SUBGRADE IMPROVEMENT
- C 4" STABILIZED SUBBASE - HOT-MIX ASPHALT
- D 9 3/4" PCC PAVEMENT
- E 9 3/4" PCC SHOULDERS
- F 9 3/4" AGGREGATE SHOULDERS
- G COMB. CONCETE CURB AND GUTTER, B-6.24
- H TIE BARS
- I TURF MEDIAN

FILE NAME = S:\JTX\6328-6399\6346\055\Micros\CADD Sheets\60W13-sht-typical.dgn

STRAND ASSOCIATES
1170 SOUTH HOUBOLT ROAD
JOLIET, ILLINOIS 60431
(815) 744-4200

USER NAME = dennisw	DESIGNED - JLB	REVISED -	
MODEL NAME = Default	DRAWN - DJW	REVISED -	
PLOT SCALE = 10.0000 ' / in.	CHECKED - BMA	REVISED -	
PLOT DATE = 12/18/2013	DATE - 12/17/13	REVISED -	

STATE OF ILLINOIS
DEPARTMENT OF TRANSPORTATION

TYPICAL SECTIONS

SCALE: NTS | SHEET 4 OF 7 SHEETS | STA. TO STA.

F.A.P. RTE.	SECTION	COUNTY	TOTAL SHEETS	SHEET NO.
575	14-N	WILL	163	21

CONTRACT NO. 60W13

ILLINOIS FED. AID PROJECT

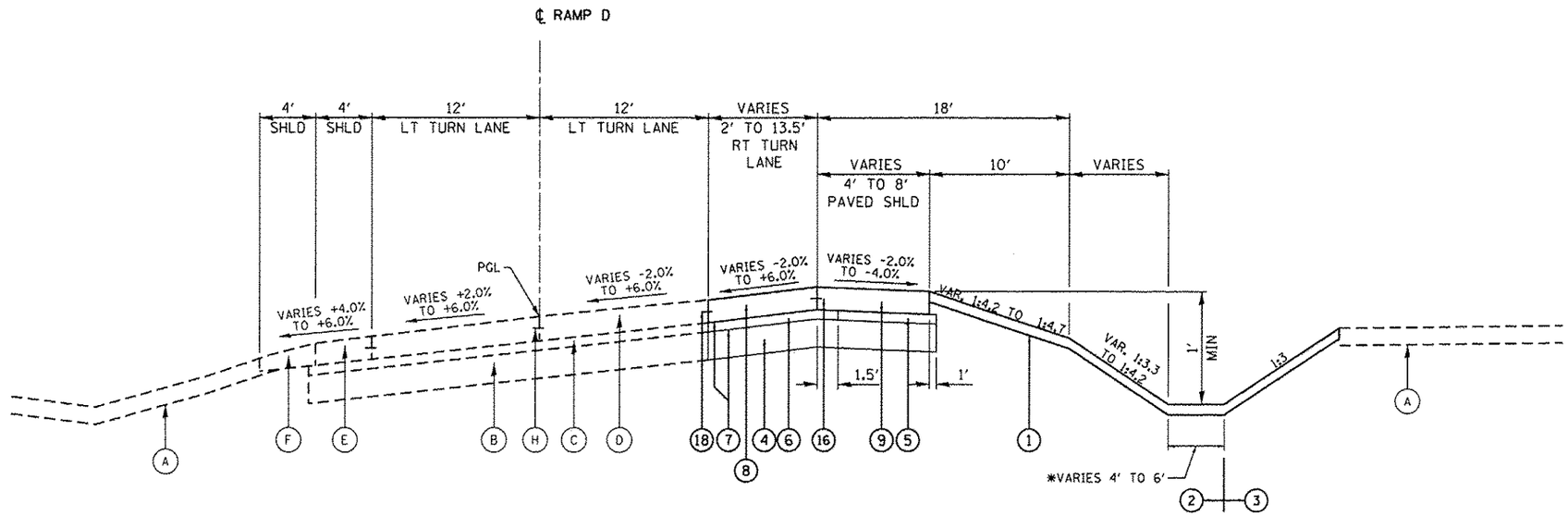

PROPOSED RAMP "D"

STA 17+62.50 TO STA 18+24.90
STA 21+00.00 TO STA 23+07.25

*4' FROM STA 17+62.50 TO STA 22+50.00
6' FROM STA 22+50.00 TO STA 23+37.03

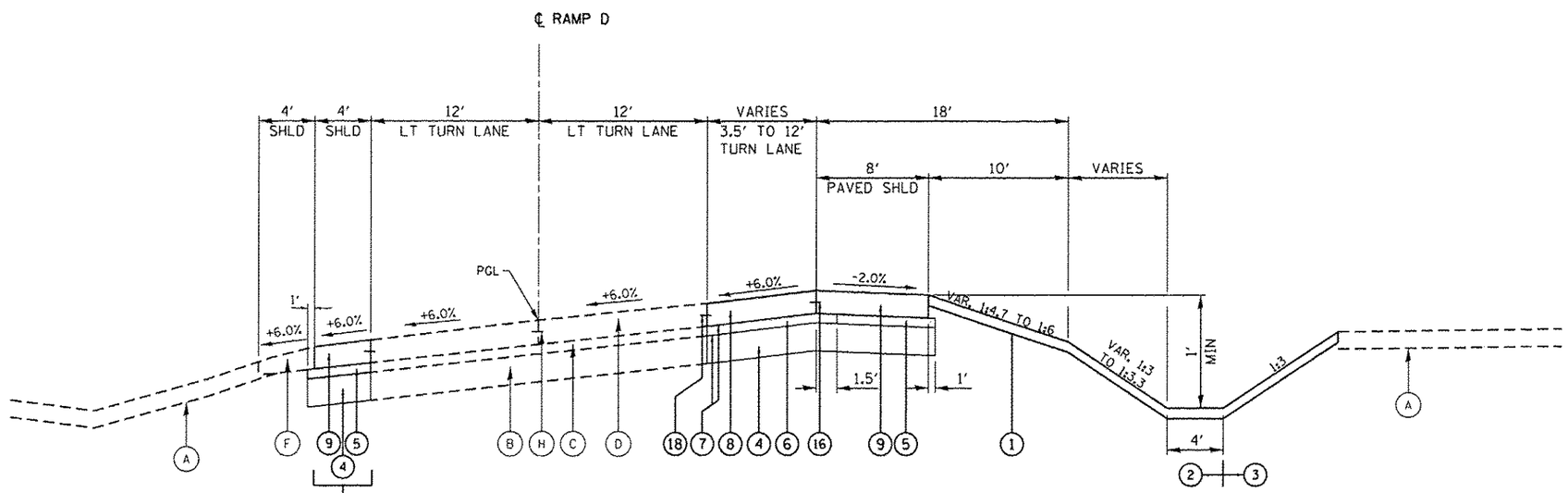

STA 18+97.29 TO STA 19+11.78
STA 20+85.25 TO STA 21+00.00

PROPOSED RAMP "D"

STA 18+24.90 TO STA 21+00.00

PROPOSED LEGEND

1. 4" TOPSOIL PLACEMENT
2. SEEDING, CLASS 2A
3. SEEDING, CLASS 4
4. AGGREGATE SUBGRADE IMPROVEMENT 12"
5. SUBBASE GRANULAR MATERIAL, TYPE C 4"
6. STABILIZED SUBBASE - HOT-MIX ASPHALT, 4"
7. BITUMINOUS MATERIALS (PRIME COAT)
8. PORTLAND CEMENT CONCRETE PAVEMENT 9 3/4" (JOINTED)
9. PORTLAND CEMENT CONCRETE SHOULDERS 9 3/4"
10. PIPE UNDERDRAINS 6"
11. COMBINATION CONCRETE CURB AND GUTTER, TYPE B-6.24
12. COMBINATION CONCRETE CURB AND GUTTER, TYPE B-6.24 (ABUTTING EXISTING PAVEMENT)
13. COMBINATION CONCRETE CURB AND GUTTER, TYPE M-6.06
14. COMBINATION CONCRETE CURB AND GUTTER, TYPE M-6.24 (ABUTTING EXISTING PAVEMENT)
15. CONCRETE MEDIAN SURFACE, 4 INCH
16. LONGITUDINAL CONSTRUCTION JOINT DRILL AND GROUT *6 TIE BARS 30" LONG AT 18" CTS
17. LONGITUDINAL SAWED JOINT *6 TIE BARS 36" LONG AT 18" CTS
18. LONGITUDINAL CONSTRUCTION JOINT DRILL AND GROUT *8 TIE BARS 30" LONG AT 18" CTS
19. CLASS SI CONCRETE (OUTLET)

NOTE:

SEE ROADWAY PLAN AND PROFILE SHEETS FOR LOCATIONS OF PRECAST CONCRETE PAVEMENT SLABS.

DENOTES WORK INCLUDED IN THE COST OF OTHER ITEMS.

EXISTING LEGEND

- A 12" TOP SOIL
- B 12" AGGREGATE SUBGRADE IMPROVEMENT
- C 4" STABILIZED SUBBASE - HOT-MIX ASPHALT
- D 9 3/4" PCC PAVEMENT
- E 9 3/4" PCC SHOULDERS
- F 9 3/4" AGGREGATE SHOULDERS
- G COMB. CONCETE CURB AND GUTTER, B-6.24
- H TIE BARS
- I TURF MEDIAN

FILE NAME = S:\JOL\16380-8999\8346\055\Micros\CADD Sheets\60W13-sht-typical.dgn

STRAND ASSOCIATES® 1170 SOUTH HOUBOLT ROAD JOLIET, ILLINOIS 60431 (815) 744-4200	USER NAME = dennisw	DESIGNED - JLB	REVISED -	STATE OF ILLINOIS DEPARTMENT OF TRANSPORTATION	TYPICAL SECTIONS	F.A.P. RTE. 575	SECTION 14-N	COUNTY WILL	TOTAL SHEETS 163 / SHEET NO. 22
	MODEL NAME = Default	DRAWN - DJW	REVISED -					CONTRACT NO. 60W13	
	PLOT SCALE = 10.0000 ' / in.	CHECKED - BMA	REVISED -						
	PLOT DATE = 12/18/2013	DATE - 12/17/13	REVISED -		SCALE: NTS / SHEET 5 OF 7 SHEETS / STA. / TO STA.			ILLINOIS FED. AID PROJECT	

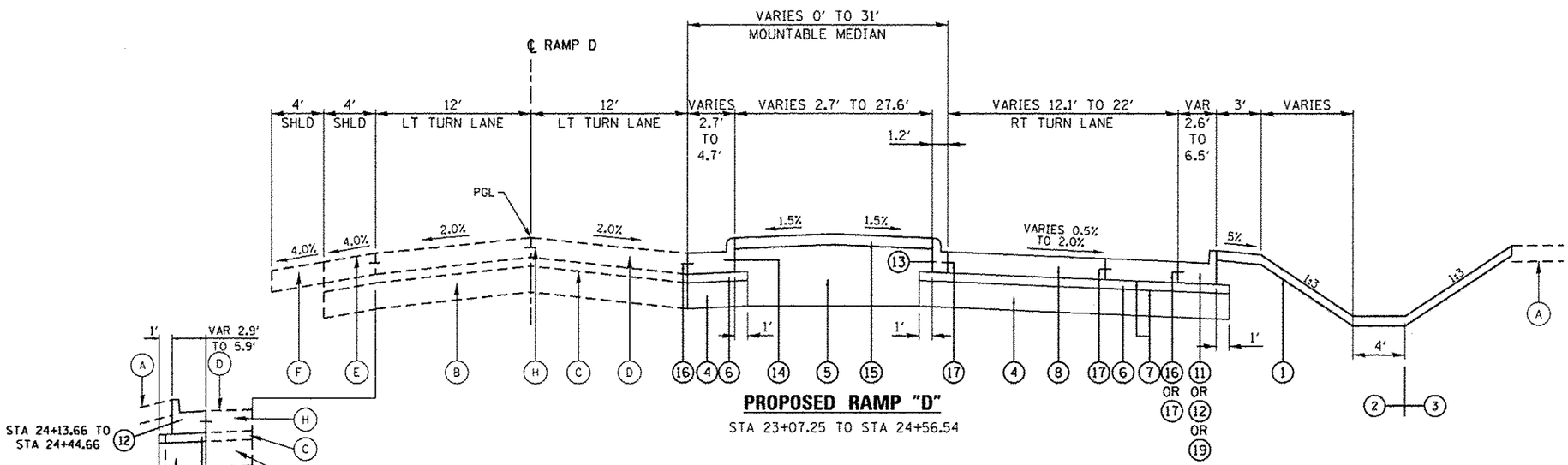

STA 22+67.49 TO STA 23+13.03

PROPOSED RAMP "D"

STA 23+07.25 TO STA 24+56.54

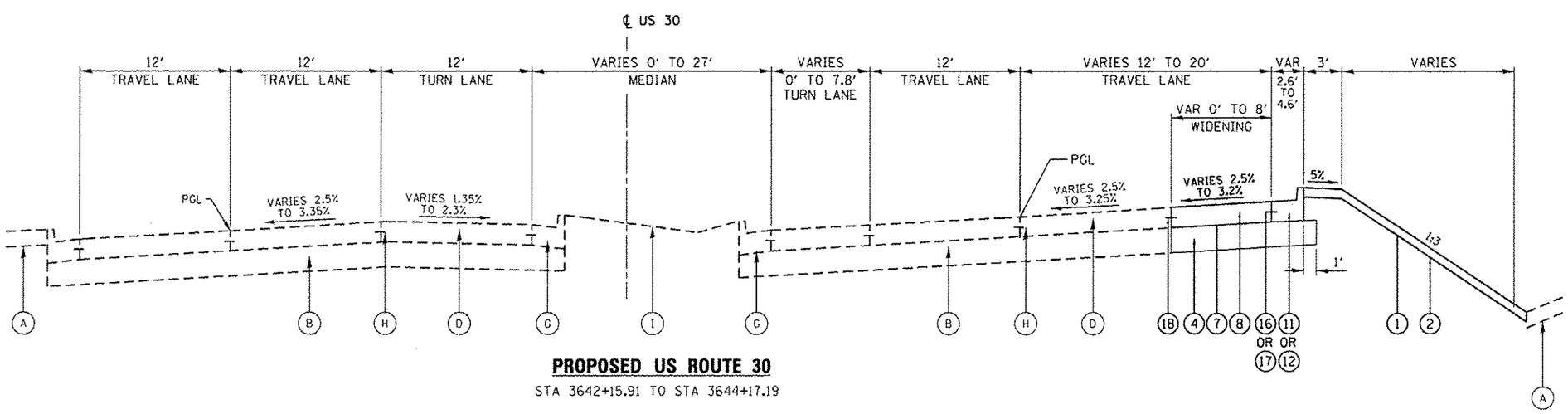

PROPOSED US ROUTE 30

STA 3642+15.91 TO STA 3644+17.19

PROPOSED LEGEND

1. 4" TOPSOIL PLACEMENT
2. SEEDING, CLASS 2A
3. SEEDING, CLASS 4
4. AGGREGATE SUBGRADE IMPROVEMENT 12"
5. SUBBASE GRANULAR MATERIAL, TYPE C 4"
6. STABILIZED SUBBASE - HOT-MIX ASPHALT, 4"
7. BITUMINOUS MATERIALS (PRIME COAT)
8. PORTLAND CEMENT CONCRETE PAVEMENT 9 3/4" (JOINTED)
9. PORTLAND CEMENT CONCRETE SHOULDERS 9 3/4"
10. PIPE UNDERDRAINS 6"
11. COMBINATION CONCRETE CURB AND GUTTER, TYPE B-6.24
12. COMBINATION CONCRETE CURB AND GUTTER, TYPE B-6.24 (ABUTTING EXISTING PAVEMENT)
13. COMBINATION CONCRETE CURB AND GUTTER, TYPE M-6.06
14. COMBINATION CONCRETE CURB AND GUTTER, TYPE M-6.24 (ABUTTING EXISTING PAVEMENT)
15. CONCRETE MEDIAN SURFACE, 4 INCH
16. LONGITUDINAL CONSTRUCTION JOINT DRILL AND GROUT #6 TIE BARS 30" LONG AT 18" CTS
17. LONGITUDINAL SAWED JOINT #6 TIE BARS 36" LONG AT 18" CTS
18. LONGITUDINAL CONSTRUCTION JOINT DRILL AND GROUT #8 TIE BARS 30" LONG AT 18" CTS
19. CLASS SI CONCRETE (OUTLET)

NOTE:

SEE ROADWAY PLAN AND PROFILE SHEETS FOR LOCATIONS OF PRECAST CONCRETE PAVEMENT SLABS.

DENOTES WORK INCLUDED IN THE COST OF OTHER ITEMS.

EXISTING LEGEND

- A 12" TOP SOIL
- B 12" AGGREGATE SUBGRADE IMPROVEMENT
- C 4" STABILIZED SUBBASE - HOT-MIX ASPHALT
- D 9 3/4" PCC PAVEMENT
- E 9 3/4" PCC SHOULDERS
- F 9 3/4" AGGREGATE SHOULDERS
- G COMB. CONCETE CURB AND GUTTER, B-6.24
- H TIE BARS
- I TURF MEDIAN

FILE NAME = S:\JOB\16328-6399\6346\DESIGN\Microsta\CADD Sheets\58W13-sht-typical.dgn

STRAND ASSOCIATES
1170 SOUTH HOUBOLT ROAD
JOLIET, ILLINOIS 60431
(815) 744-4200

USER NAME = dennisw	DESIGNED - JLB	REVISED -	
MODEL NAME = Default	DRAWN - DJW	REVISED -	
PLOT SCALE = 10.0000 ' / in.	CHECKED - BMA	REVISED -	
PLOT DATE = 12/18/2013	DATE - 12/17/13	REVISED -	

STATE OF ILLINOIS
DEPARTMENT OF TRANSPORTATION

TYPICAL SECTIONS

SCALE: NTS | SHEET 6 OF 7 SHEETS | STA. TO STA.

F.A.P. RTE.	SECTION	COUNTY	TOTAL SHEETS	SHEET NO.
575	14-N	WILL	163	23

CONTRACT NO. 60W13

ILLINOIS FED. AID PROJECT

HOT-MIX ASPHALT MIXTURE REQUIREMENTS	
MIXTURE TYPE	AIR VOIDS @ Ndes
STABILIZED SUB-BASE HOT-MIX ASPHALT, 4"	3% @ 50 Gyr.
STABILIZED SUBBASE HMA (HMA BINDER IL-19.0)	

NOTE 1: THE AC TYPE FOR POLYMERIZED HMA MIXTURES SHALL BE "SBS/SBR PG 76-22" AND FOR NON-POLYMERIZED HMA THE "AC TYPE SHALL BE "PG 64-22" UNLESS MODIFIED BY DISTRICT ONE SPECIAL PROVISIONS". FOR USE OF RECYCLED MATERIALS SEE SPECIAL PROVISIONS.

UNDERCUT SCHEDULE

RAMP B	DEPTH (INCHES)
17+50 TO 19+50	12"

PROPOSED LEGEND

1. 4" TOPSOIL PLACEMENT
2. SEEDING, CLASS 2A
3. SEEDING, CLASS 4
4. AGGREGATE SUBGRADE IMPROVEMENT 12"
5. SUBBASE GRANULAR MATERIAL, TYPE C 4"
6. STABILIZED SUBBASE - HOT-MIX ASPHALT, 4"
7. BITUMINOUS MATERIALS (PRIME COAT)
8. PORTLAND CEMENT CONCRETE PAVEMENT 9 3/4" (JOINTED)
9. PORTLAND CEMENT CONCRETE SHOULDERS 9 3/4"
10. PIPE UNDERDRAINS 6"
11. COMBINATION CONCRETE CURB AND GUTTER, TYPE B-6.24
12. COMBINATION CONCRETE CURB AND GUTTER, TYPE B-6.24 (ABUTTING EXISTING PAVEMENT)
13. COMBINATION CONCRETE CURB AND GUTTER, TYPE M-6.06
14. COMBINATION CONCRETE CURB AND GUTTER, TYPE M-6.24 (ABUTTING EXISTING PAVEMENT)
15. CONCRETE MEDIAN SURFACE, 4 INCH
16. LONGITUDINAL CONSTRUCTION JOINT DRILL AND GROUT #6 TIE BARS 30" LONG AT 18" CTS
17. LONGITUDINAL SAWED JOINT #6 TIE BARS 36" LONG AT 18" CTS
18. LONGITUDINAL CONSTRUCTION JOINT DRILL AND GROUT #8 TIE BARS 30" LONG AT 18" CTS
19. CLASS SI CONCRETE (OUTLET)

DENOTES WORK INCLUDED IN THE COST OF OTHER ITEMS.

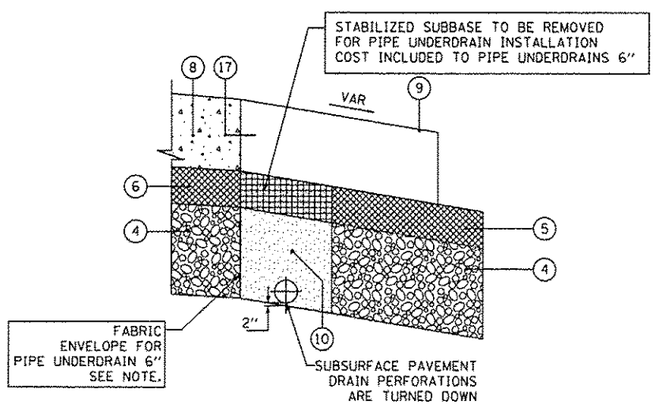

NOTE:
THE COST OF FABRIC ENVELOPE AND TRENCH BACKFILL INCLUDED IN THE PRICE OF PIPE UNDERDRAINS 6".

PIPE UNDERDRAIN 6" – UNDER SHOULDER

RAMP B: STA 15+00 TO STA 17+00 RT
STA 21+92.80 TO STA 22+31.95 RT

RAMP D: STA 21+00 TO STA 23+00 RT

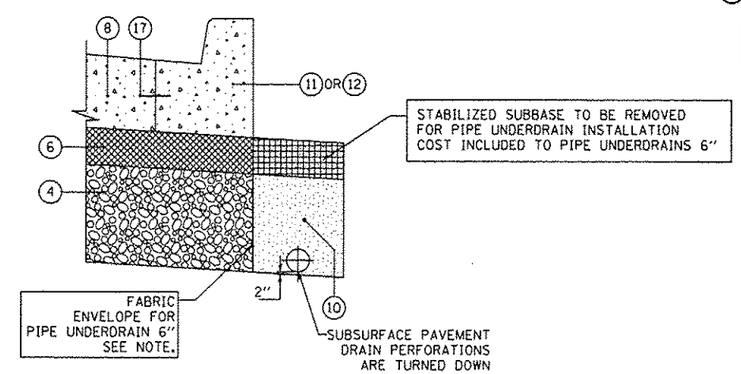

NOTE:
THE COST OF FABRIC ENVELOPE AND TRENCH BACKFILL INCLUDED IN THE PRICE OF PIPE UNDERDRAINS 6".

PIPE UNDERDRAIN 6" – UNDER CURB AND GUTTER

RAMP B: STA 21+92.80 TO STA 23+06.72 RT

FILE NAME = S:\JOL\6328-6399\6346\055\Micros\CADD Sheets\60W13-sht-typical.dgn

STRAND ASSOCIATES
1170 SOUTH HOUBOLT ROAD
JOLIET, ILLINOIS 60431
(815) 744-4200

USER NAME = dennisw	DESIGNED - JLB	REVISED -	
MODEL NAME = Default	DRAWN - DJW	REVISED -	
PLOT SCALE = 10.0000 ' / in.	CHECKED - BMA	REVISED -	
PLOT DATE = 12/18/2013	DATE - 12/17/13	REVISED -	

STATE OF ILLINOIS
DEPARTMENT OF TRANSPORTATION

TYPICAL SECTIONS

SCALE: NTS | SHEET 7 OF 7 SHEETS | STA. TO STA.

F.A.P. RTE.	SECTION	COUNTY	TOTAL SHEETS	SHEET NO.
575	14-N	WILL	163	24

CONTRACT NO. 60W13

ILLINOIS FED. AID PROJECT

RAMP B

LOCATION		EARTH EXCAVATION 20200100	EARTH EXCAVATION ADJUSTED FOR SHRINKAGE (15%)	EMBANKMENT	FURNISHED EXCAVATION 20400800	TOPSOIL EXCAVATION 21101505	TOPSOIL PLACEMENT (4")	REMOVAL AND DISPOSAL OF UNSUITABLE MATERIALS 20201200	
					EARTHWORK BALANCE WASTE (+) OR SHORTAGE (-)			TOPSOIL BALANCE WASTE (+) OR SHORTAGE (-)	UNDERCUT AND OTHER UNSUITABLE MATERIAL
STATION	STATION	CU YD	CU YD	CU YD	CU YD	CU YD	CU YD	CU YD	CU YD
13+90.00	14+00	4.99	4.24	6.20	-1.96	11.80	3.48	8.32	0.00
14+00	14+15	7.57	6.43	9.42	-2.99	17.96	5.28	12.68	0.00
14+15	14+50	19.29	16.40	22.74	-6.34	40.33	11.20	29.13	0.00
14+50	15+00	30.45	25.88	47.99	-22.10	64.02	16.04	47.98	0.00
15+00	15+50	29.57	25.14	65.21	-40.07	73.13	16.61	56.52	0.00
15+50	16+00	27.81	23.63	81.53	-57.90	83.04	17.44	65.59	0.00
16+00	16+90	28.81	24.49	112.14	-87.65	89.88	17.68	72.19	0.00
16+90	17+00	25.61	21.77	100.38	-78.62	74.54	14.59	59.95	0.00
17+00	17+50	6.91	5.87	23.61	-17.73	18.85	3.83	15.03	0.00
17+50	18+00	18.81	15.99	109.93	-93.93	92.35	19.84	72.50	41.00
18+00	18+50	3.58	3.04	107.89	-104.85	94.58	22.21	72.38	60.34
18+50	19+00	4.75	4.04	122.72	-118.68	95.07	23.01	72.06	37.95
19+00	19+50	2.80	2.38	134.44	-132.06	89.56	21.38	68.18	37.62
19+50	20+00	0.32	0.28	139.81	-139.53	82.69	19.25	63.45	38.57
20+00	20+50	8.40	7.14	145.43	-138.29	76.37	17.28	59.09	19.56
20+50	21+00	17.01	14.46	144.54	-130.08	76.76	17.32	59.44	0.00
21+00	21+50	17.67	15.02	135.12	-120.10	77.09	17.33	59.76	0.00
21+50	22+00	19.27	16.38	106.65	-90.27	72.96	15.35	57.61	0.00
22+00	22+50	21.55	18.31	73.72	-55.40	65.62	13.14	52.48	0.00
22+50	22+72	27.78	23.62	77.94	-54.32	66.17	13.45	52.72	0.00
22+72	23+00	15.67	13.32	116.80	-103.48	48.46	9.17	39.30	0.00
Totals		338.62	287.83	1,884.19	-1,596.36	1,411.23	314.88	1096.35	235.04

RAMP D

LOCATION		EARTH EXCAVATION 20200100	EARTH EXCAVATION ADJUSTED FOR SHRINKAGE (15%)	EMBANKMENT	FURNISHED EXCAVATION 20400800	TOPSOIL EXCAVATION 21101505	TOPSOIL PLACEMENT (4")	REMOVAL AND DISPOSAL OF UNSUITABLE MATERIALS 20201200	
					EARTHWORK BALANCE WASTE (+) OR SHORTAGE (-)			TOPSOIL BALANCE WASTE (+) OR SHORTAGE (-)	UNDERCUT AND OTHER UNSUITABLE MATERIAL
STATION	STATION	CU YD	CU YD	CU YD	CU YD	CU YD	CU YD	CU YD	CU YD
17+63	17+98	17.39	14.78	22.75	-7.97	40.30	9.40	30.90	0.00
17+98	18+00	1.30	1.10	1.92	-0.82	2.72	0.78	1.95	0.00
18+00	18+50	26.07	22.16	48.38	-26.21	62.49	17.02	45.47	0.00
18+50	19+00	29.40	24.99	72.19	-47.20	73.46	18.42	55.04	0.00
19+00	19+50	33.30	28.31	92.28	-63.98	78.05	18.35	59.70	0.00
19+50	19+73	16.59	14.10	42.95	-28.84	36.34	8.26	28.09	0.00
19+73	20+00	20.50	17.42	51.79	-34.37	44.34	9.85	34.49	0.00
20+00	20+50	29.67	25.22	88.63	-63.41	76.54	16.71	59.83	0.00
20+50	21+00	23.54	20.01	76.78	-56.77	70.75	14.99	55.75	0.00
21+00	21+50	22.93	19.49	56.58	-37.10	64.78	13.23	51.55	0.00
21+50	22+00	22.28	18.94	33.39	-14.46	58.18	11.39	46.79	0.00
22+00	22+50	24.13	20.51	20.97	-0.45	54.08	10.31	43.77	0.00
22+50	23+00	29.70	25.25	15.34	9.91	51.59	9.67	41.92	0.00
23+00	23+50	30.96	26.32	21.69	4.63	52.50	10.66	41.84	0.00
23+50	24+00	40.80	34.68	21.04	13.64	65.46	12.32	53.14	0.00
24+00	24+50	75.67	64.32	7.42	56.90	37.72	7.13	30.60	0.00
24+50	24+56	17.10	14.53	0.14	14.39	0.00	0.12	-0.12	0.00
Totals		461.34	392.14	674.22	-282.09	869.30	188.59	680.71	0.00

US ROUTE 30

LOCATION		EARTH EXCAVATION 20200100	EARTH EXCAVATION ADJUSTED FOR SHRINKAGE (15%)	EMBANKMENT	FURNISHED EXCAVATION 20400800	TOPSOIL EXCAVATION 21101505	TOPSOIL PLACEMENT (4")	REMOVAL AND DISPOSAL OF UNSUITABLE MATERIALS 20201200	
					EARTHWORK BALANCE WASTE (+) OR SHORTAGE (-)			TOPSOIL BALANCE WASTE (+) OR SHORTAGE (-)	UNDERCUT AND OTHER UNSUITABLE MATERIAL
STATION	STATION	CU YD	CU YD	CU YD	CU YD	CU YD	CU YD	CU YD	CU YD
3642+16	3642+50	20.48	17.41	4.24	13.17	8.88	1.23	7.65	0.00
3642+50	3643+00	19.80	16.83	34.09	-17.26	41.88	8.06	33.81	0.00
3643+00	3643+50	16.64	14.14	38.44	-24.30	42.90	9.35	33.55	0.00
3643+50	3644+00	11.16	9.48	13.37	-3.89	18.15	4.21	13.94	0.00
3644+00	3644+17	2.67	2.27	1.82	0.45	2.59	0.74	1.85	0.00
3655+00	3655+50	14.56	12.38	78.96	-66.58	41.87	7.31	34.56	0.00
3655+50	3655+84	6.42	5.46	4.01	1.45	6.24	1.55	4.69	0.00
Totals		91.74	77.98	174.94	-96.96	162.52	32.46	130.06	0.00

SUMMARY

LOCATION	EARTH EXCAVATION 20200100	EARTH EXCAVATION ADJUSTED FOR SHRINKAGE (15%)	EMBANKMENT	FURNISHED EXCAVATION 20400800	TOPSOIL EXCAVATION 21101505	TOPSOIL PLACEMENT (4")	REMOVAL AND DISPOSAL OF UNSUITABLE MATERIALS 20201200	
				EARTHWORK BALANCE WASTE (+) OR SHORTAGE (-)			TOPSOIL BALANCE WASTE (+) OR SHORTAGE (-)	UNDERCUT AND OTHER UNSUITABLE MATERIAL
ROADWAY	CU YD	CU YD	CU YD	CU YD	CU YD	CU YD	CU YD	CU YD
US ROUTE 30	92	78	175	-97	163	32	130	0
RAMP B	339	288	1,884	-1,596	1,411	315	1096	235
RAMP D	461	392	674	-282	869	189	681	0
TOTAL QUANTITIES	895	760	2,735	-1,980	2,445	540	1,910	240

NOTE: THE WASTE FROM TOPSOIL EXCAVATED AND NOT PLACED SHALL BE PAID FOR AS REMOVAL AND DISPOSAL OF UNSUITABLE MATERIALS.

FILE NAME = S:\JOL\6328-6399\6346\855\Micros\CADD Sheets\60W13-sht-schedule.dgn

STRAND ASSOCIATES
1170 SOUTH HOUBOLT ROAD
JOLIET, ILLINOIS 60431
(815) 744-4200

USER NAME = dennisw	DESIGNED - JLB	REVISED -
MODEL NAME = Default	DRAWN - DJW	REVISED -
PLOT SCALE = 100.0000 ' / in.	CHECKED - BMA	REVISED -
PLOT DATE = 12/18/2013	DATE - 12/17/13	REVISED -

STATE OF ILLINOIS
DEPARTMENT OF TRANSPORTATION

SCHEDULE OF QUANTITIES

SCALE: N/A | SHEET 1 OF 1 SHEETS | STA. TO STA.

F.A.P. RTE.	SECTION	COUNTY	TOTAL SHEETS	SHEET NO.
575	14-N	WILL	163	25

CONTRACT NO. 60W13

ILLINOIS FED. AID PROJECT

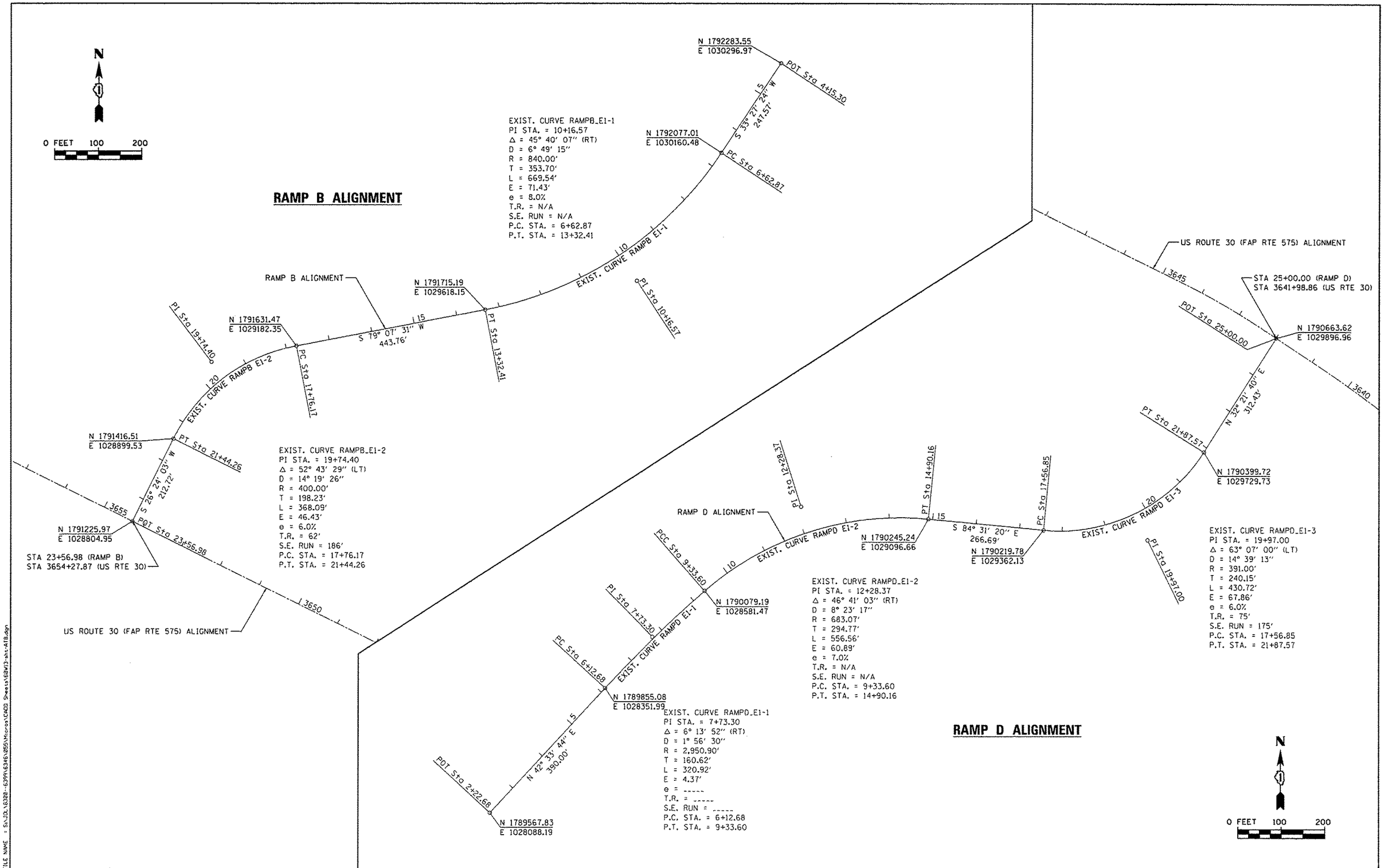

FILE NAME = S:\JOL\60288-63991\6345\255\Micro\CADD Sheets\60W13-sht-418.dgn

STRAND ASSOCIATES® 1170 SOUTH HOUBOLT ROAD JOLIET, ILLINOIS 60431 (815) 744-4200	USER NAME = dennisw	DESIGNED - JLB	REVISED -	STATE OF ILLINOIS DEPARTMENT OF TRANSPORTATION	RAMP B AND D HORIZONTAL ALIGNMENTS	F.A.P. RTE.	SECTION	COUNTY	TOTAL SHEETS / SHEET NO.
	MODEL NAME = Default	DRAWN - DJW	REVISED -			575	14-N	WILL	163 / 26
	PLOT SCALE = 200.0000 ' / in.	CHECKED - BMA	REVISED -					CONTRACT NO. 60W13	
	PLOT DATE = 12/18/2013	DATE - 12/17/13	REVISED -		SCALE: 1" = 100' SHEET 1 OF 3 SHEETS STA. TO STA.			ILLINOIS FED. AID PROJECT	

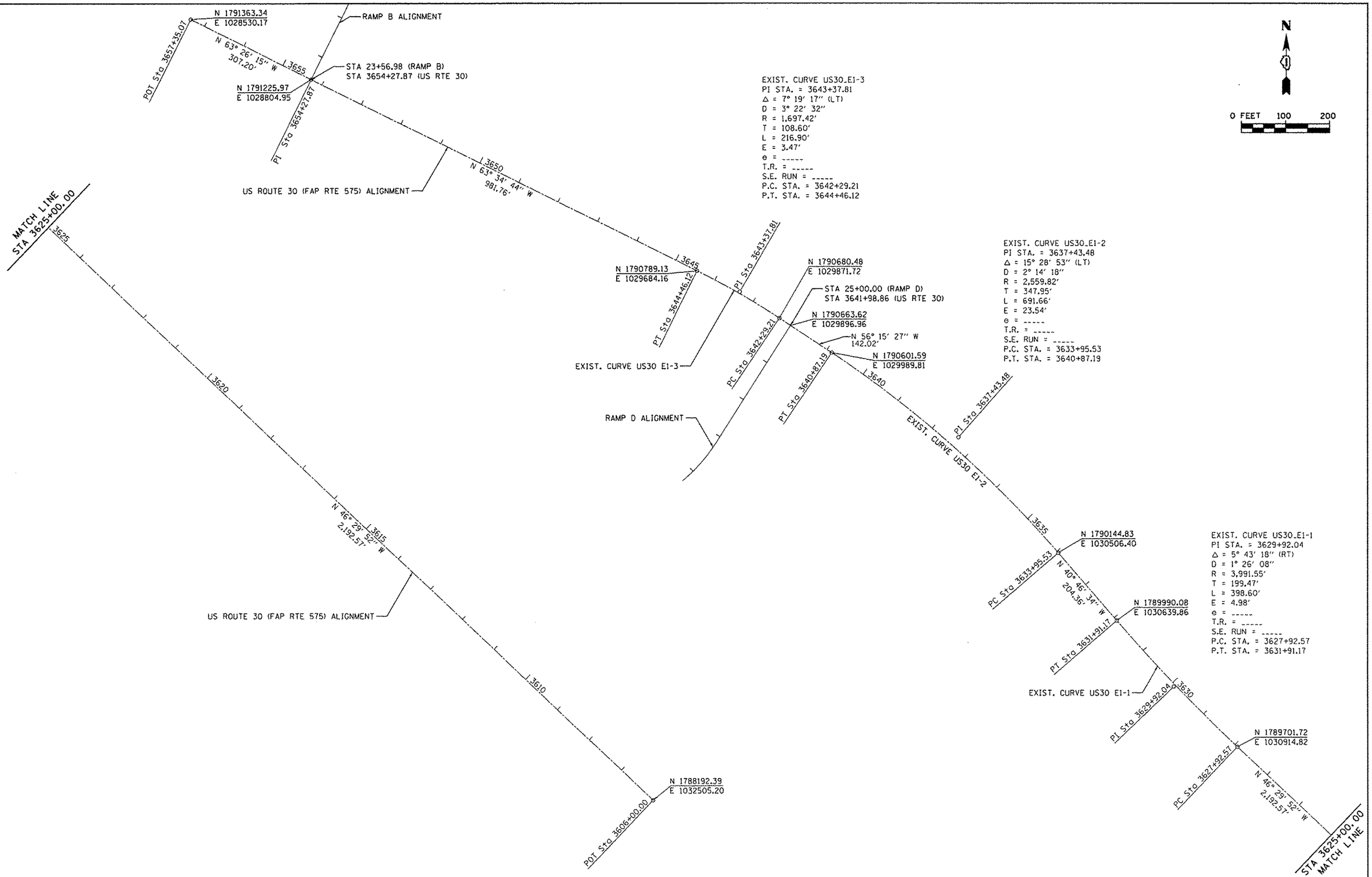

FILE NAME = S:\JOL\6328-6399\6346\855\Micros\CADD Sheets\60W13-sht-ATB.dgn

STRAND ASSOCIATES® 1170 SOUTH HOUBOLT ROAD JOLIET, ILLINOIS 60431 (815) 744-4200	USER NAME = dennisw	DESIGNED - JLB	REVISED -	STATE OF ILLINOIS DEPARTMENT OF TRANSPORTATION	US ROUTE 30 HORIZONTAL ALIGNMENT	F.A.P. RTE.	SECTION	COUNTY	TOTAL SHEETS / SHEET NO.
	MODEL NAME = Default	DRAWN - DJW	REVISED -			575	14-N	WILL	163 / 27
	PLOT SCALE = 200.0000 ' / in.	CHECKED - BMA	REVISED -					CONTRACT NO. 60W13	
	PLOT DATE = 12/18/2013	DATE - 12/17/13	REVISED -		SCALE: 1" = 100' SHEET 2 OF 3 SHEETS STA. TO STA.			ILLINOIS FED. AID PROJECT	

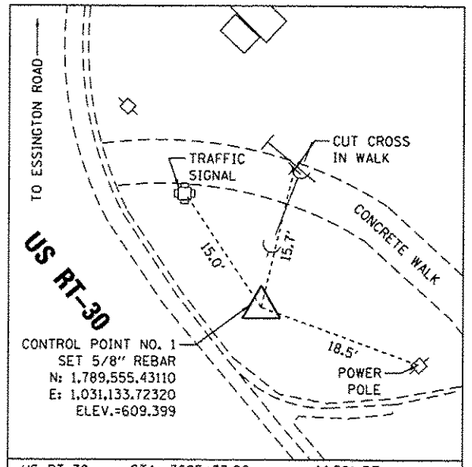

US RT-30 STA: 3625+33.09 44.58' RT

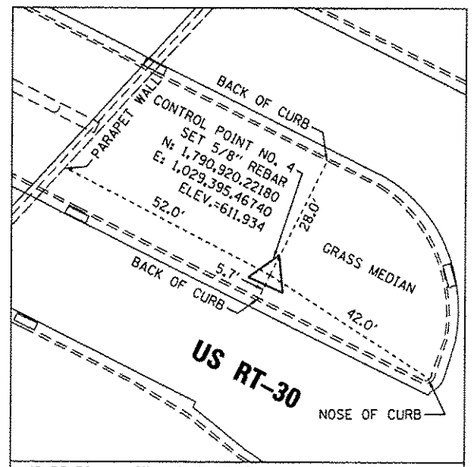

US RT-30 STA: 3647+62.98 11.20' LT

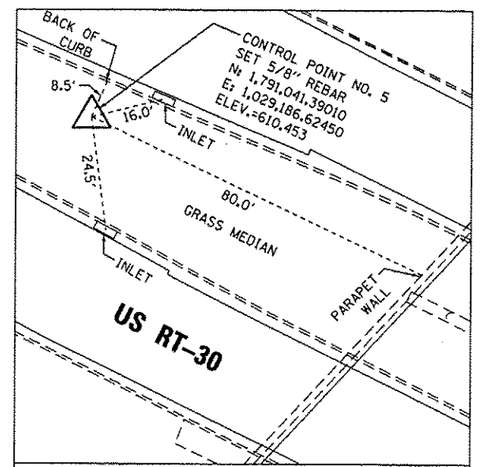

US RT-30 STA: 3650+03.93 4.28' RT

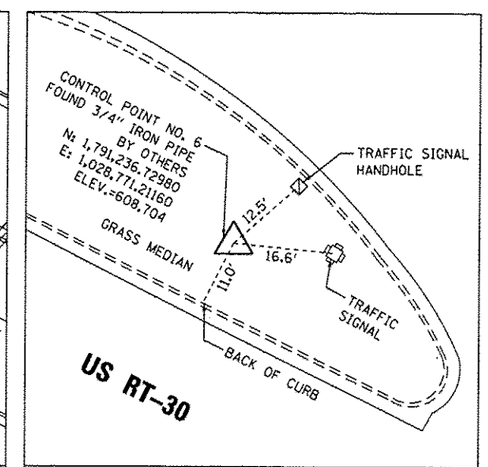

US RT-30 STA: 3654+62.87 5.83' LT

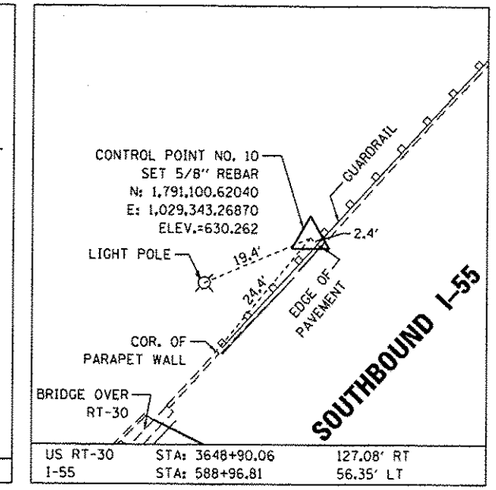

US RT-30 STA: 3648+90.06 127.08' RT
I-55 STA: 588+96.81 56.35' LT

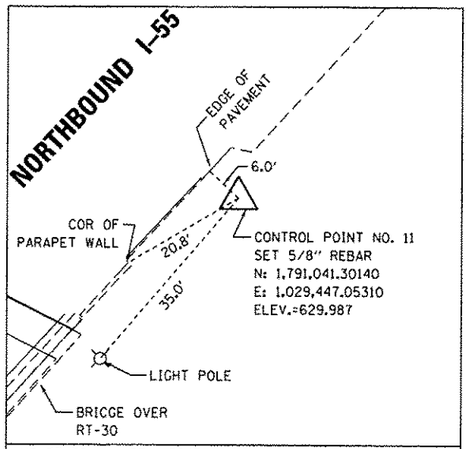

US RT-30 STA: 3647+70.72 120.19' RT
I-55 STA: 589+23.32 60.21' RT

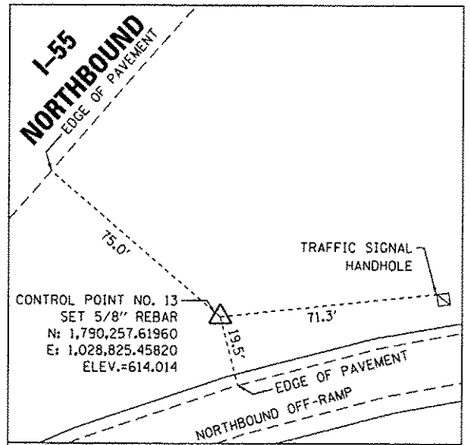

I-55 STA: 579+25.66 132.46' RT
RAMP-D STA: 102+27.31 39.25' LT

SITE BENCHMARKS

BENCHMARK-1: ELEVATION=609.094
CUT BOX ON SE'LY CORNER OF CONCRETE TRAFFIC SIGNAL FOUNDATION AT THE N'LY CORNER OF US ROUTE 30 & ESSINGTON ROAD.

BENCHMARK-2: ELEVATION=607.883
CUT BOX ON N'LY SIDE OF CONC. BASE FOR THE 2ND LIGHT POLE W. OF ESSINGTON ROAD ON THE N. SIDE OF US ROUTE 30.

BENCHMARK-3: ELEVATION=611.509
CUT BOX ON THE SW. COR. OF CONC. BASE FOR THE 2ND LIGHT POLE W. OF NORMAN AVE. ON THE N. SIDE OF US ROUTE 30.

BENCHMARK-4: ELEVATION=611.363
CUT BOX ON THE N'LY SIDE OF CONC. BASE FOR THE 3RD LIGHT POLE W. OF NORTHBOUND RAMP TO I-55 FROM US ROUTE 30 ON THE N. SIDE OF US ROUTE 30.

BENCHMARK-5: ELEVATION=614.678
CUT HORIZONTAL NOTCH ON THE MIDDLE OF THE N'LY FACE OF THE CENTER PIER FOR I-55 BRIDGE ON THE S. SIDE OF US ROUTE 30, 4'+/- ABOVE GRADE.

BENCHMARK-6: ELEVATION=608.748
CUT BOX ON THE N'LY SIDE OF CONC. BASE FOR LIGHT POLE @ THE SW'LY COR. OF THE INTERSECTION OF THE SOUTHBOUND RAMP TO I-55 FROM US ROUTE 30.

BENCHMARK-7: ELEVATION=606.043
CUT BOX ON THE S'LY SIDE OF CONC. BASE FOR THE 2ND LIGHT POLE W'LY OF THE SOUTHBOUND EXIT RAMP TO US ROUTE 30 ON THE N'LY SIDE OF US ROUTE 30.

BENCHMARK-8: ELEVATION=606.184
SET MAG NAIL IN WHITE STRIPE ON N'LY SIDE OF W. FRONTAGE ROAD 23'+/- E'LY OF A 25MPH SIGN ON THE S'LY SIDE OF W. FRONTAGE ROAD.

BENCHMARK-9: ELEVATION=619.697
CUT BOX ON THE W. SIDE OF CONC. BASE FOR THE 4TH LIGHT POLE S. OF THE I-55 BRIDGE OVER US ROUTE 30, ON THE W. SIDE OF I-55.

BENCHMARK-10: ELEVATION=609.495
FOUND BOX CUT ON CONC. BASE OF MA7/LIGHT POLE, 13'+/- S'LY OF FOOD SIGN ON THE W. SIDE OF THE SOUTHBOUND RAMP TO US ROUTE 30 FROM I-55.

BENCHMARK-11: ELEVATION=621.828
CUT BOX ON THE S'LY SIDE OF CONC. BASE OF MN3/LIGHT POLE, BEING THE LAST LIGHT POLE ON THE W. SIDE OF THE NORTHBOUND RAMP TO I-55 FROM US ROUTE 30.

BENCHMARK-12: ELEVATION=610.215
CUT BOX ON THE E'LY SIDE OF CONC. BASE FOR THE 3RD LIGHT POLE N. OF US ROUTE 30 ON THE E. SIDE OF THE NORTHBOUND RAMP TO I-55 FROM US ROUTE 30.

BENCHMARK-13: ELEVATION=609.747
CUT BOX ON THE W. SIDE OF CONC. BASE FOR THE 3RD LIGHT POLE S. OF US ROUTE 30 ON THE E. SIDE OF THE NORTHBOUND RAMP TO US ROUTE 30 FROM I-55.

BENCHMARK-14: ELEVATION=618.262
CUT BOX ON CONC. BASE FOR THE 2ND LIGHT POLE/(MH2) N'LY OF THE GORE @ NORTHBOUND RAMP TO US ROUTE 30 FROM I-55 ON THE E. SIDE OF I-55.

BENCHMARK-15: ELEVATION=624.661
CUT BOX ON CONC. BASE FOR THE 4TH LIGHT POLE/(MH1) N'LY OF THE GORE @ NORTHBOUND RAMP TO US ROUTE 30 FROM I-55 ON THE E. SIDE OF I-55.

ROUTE 30 AND I-55 HORIZONTAL AND VERTICAL DATUM

COORDINATES PROVIDED HEREON ARE BASED ON THE ILLINOIS STATE PLANE COORDINATE SYSTEM, EAST ZONE, NAD83(2007). COORDINATE VALUES WERE DERIVED THROUGH STATIC GPS SESSIONS AND TRAVERSE. ELEVATIONS PROVIDED HEREON ARE NORTH AMERICAN VERTICAL DATUM OF 1988 (NAVD88). ALL ELEVATIONS WERE DERIVED THROUGH DIGITAL DIFFERENTIAL LEVELING, BASED ON NGS 1ST ORDER VERTICAL MONUMENT G-142 PID: MF0081. ELEV.=583.152

FILE NAME = S:\JOL\6308-6299\6346\055\Micro\CADD Sheets\60w13-sht-a18.dgn

STRAND ASSOCIATES
1170 SOUTH HOUBOLT ROAD
JOLIET, ILLINOIS 60431
(815) 744-4200

USER NAME = dennisv	DESIGNED - JLB	REVISED -	
MODEL NAME = Default	DRAWN - DJW	REVISED -	
PLOT SCALE = 200.0000 ' / in.	CHECKED - BMA	REVISED -	
PLOT DATE = 12/18/2013	DATE - 12/17/13	REVISED -	

STATE OF ILLINOIS
DEPARTMENT OF TRANSPORTATION

CONTROL TIES AND BENCHMARKS

SCALE: N/A | SHEET 3 OF 3 SHEETS | STA. TO STA.

F.A.P. RTE.	SECTION	COUNTY	TOTAL SHEETS	SHEET NO.
575	14-N	WILL	163	28

CONTRACT NO. 60W13
ILLINOIS FED. AID PROJECT

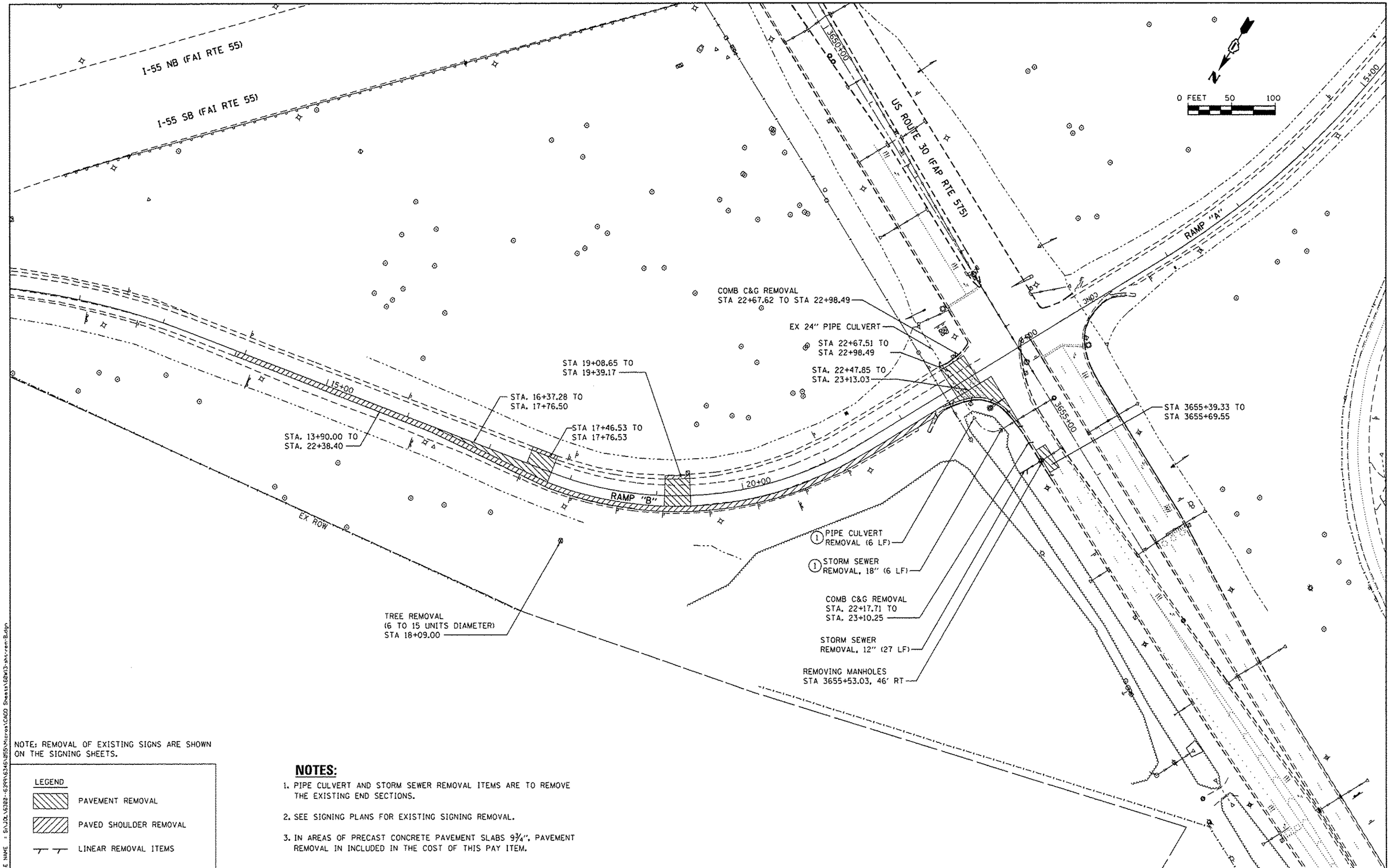

NOTE: REMOVAL OF EXISTING SIGNS ARE SHOWN ON THE SIGNING SHEETS.

LEGEND

- PAVEMENT REMOVAL
- PAVED SHOULDER REMOVAL
- LINEAR REMOVAL ITEMS

NOTES:

1. PIPE CULVERT AND STORM SEWER REMOVAL ITEMS ARE TO REMOVE THE EXISTING END SECTIONS.
2. SEE SIGNING PLANS FOR EXISTING SIGNING REMOVAL.
3. IN AREAS OF PRECAST CONCRETE PAVEMENT SLABS 9¾", PAVEMENT REMOVAL IN INCLUDED IN THE COST OF THIS PAY ITEM.

FILE NAME = S:\JOL\6302-6399\6346\DESIGN\Micros\CADD Sheets\60W13-sht-rem-B.dgn

STRAND ASSOCIATES®
1170 SOUTH HOUBOLT ROAD
JOLIET, ILLINOIS 60431
(815) 744-4200

USER NAME = dennisw	DESIGNED - JLB	REVISED -	
MODEL NAME = Default	DRAWN - DJW	REVISED -	
PLOT SCALE = 100.0000 ' / in.	CHECKED - BMA	REVISED -	
PLOT DATE = 12/18/2013	DATE - 12/17/13	REVISED -	

STATE OF ILLINOIS
DEPARTMENT OF TRANSPORTATION

REMOVAL PLAN
RAMP "B"

SCALE: 1" = 50' | SHEET 1 OF 2 SHEETS | STA. TO STA.

F.A.P. RTE.	SECTION	COUNTY	TOTAL SHEETS	SHEET NO.
575	14-N	WILL	163	29
		CONTRACT NO. 60W13		
		ILLINOIS FED. AID PROJECT		

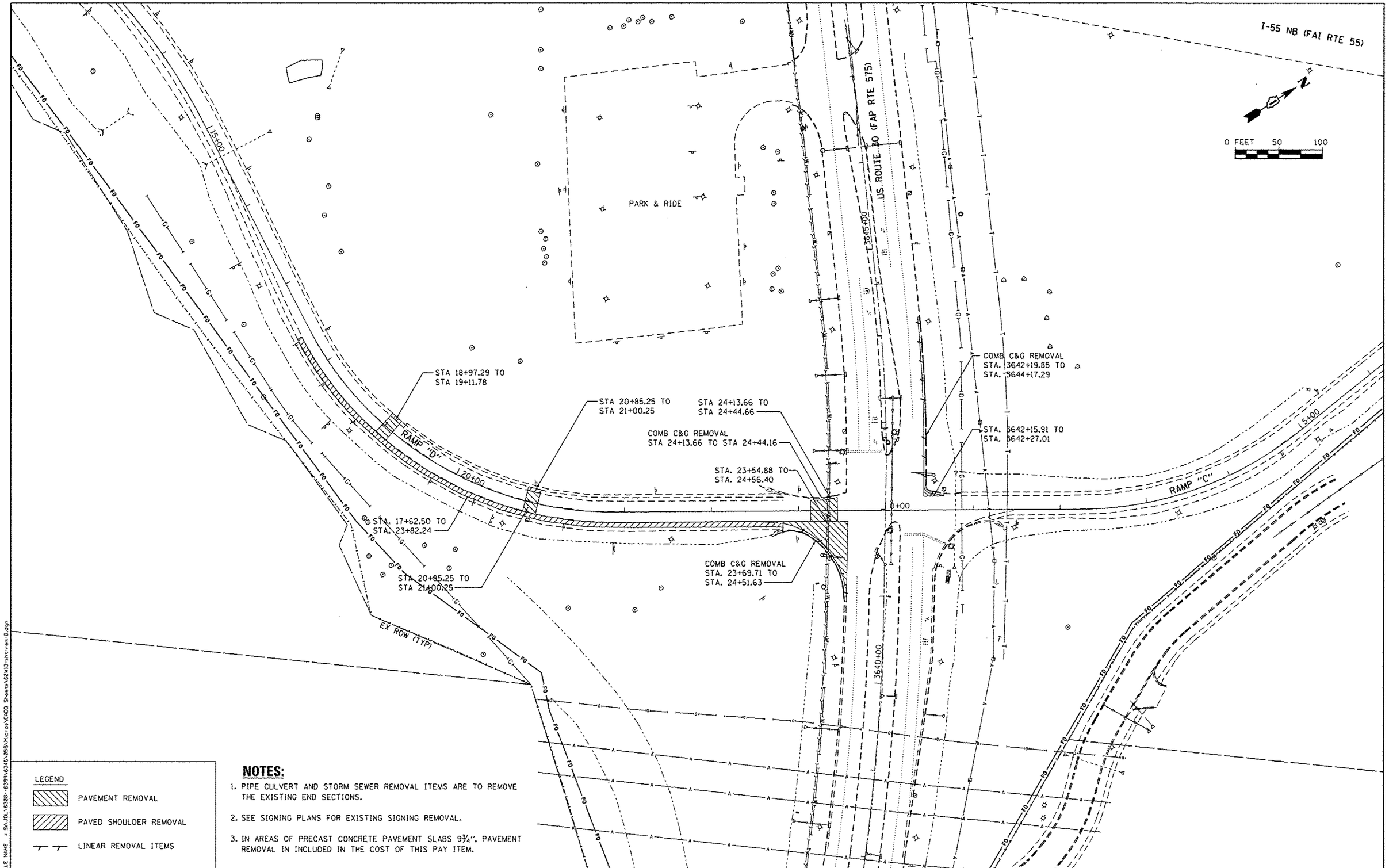

LEGEND

- PAVEMENT REMOVAL
- PAVED SHOULDER REMOVAL
- LINEAR REMOVAL ITEMS

NOTES:

1. PIPE CULVERT AND STORM SEWER REMOVAL ITEMS ARE TO REMOVE THE EXISTING END SECTIONS.
2. SEE SIGNING PLANS FOR EXISTING SIGNING REMOVAL.
3. IN AREAS OF PRECAST CONCRETE PAVEMENT SLABS 9¾", PAVEMENT REMOVAL IN INCLUDED IN THE COST OF THIS PAY ITEM.

FILE NAME = S:\JOB\6328-6399\6346\DGN\Micros\CADD Sheets\60W13-sht-rem-D.dgn

STRAND ASSOCIATES®
1170 SOUTH HOUBOLT ROAD
JOLIET, ILLINOIS 60431
(815) 744-4200

USER NAME = dennisw	DESIGNED - JLB	REVISED -
MODEL NAME = Default	DRAWN - DJW	REVISED -
PLOT SCALE = 100.0000 ' / in.	CHECKED - BMA	REVISED -
PLOT DATE = 1/22/2014	DATE - 12/17/13	REVISED -

STATE OF ILLINOIS
DEPARTMENT OF TRANSPORTATION

REMOVAL PLAN
RAMP "D"

SCALE: 1" = 50' | SHEET 2 OF 2 SHEETS | STA. TO STA.

F.A.P. RTE.	SECTION	COUNTY	TOTAL SHEETS	SHEET NO.
575	14-N	WILL	163	30

CONTRACT NO. 60W13

ILLINOIS FED. AID PROJECT

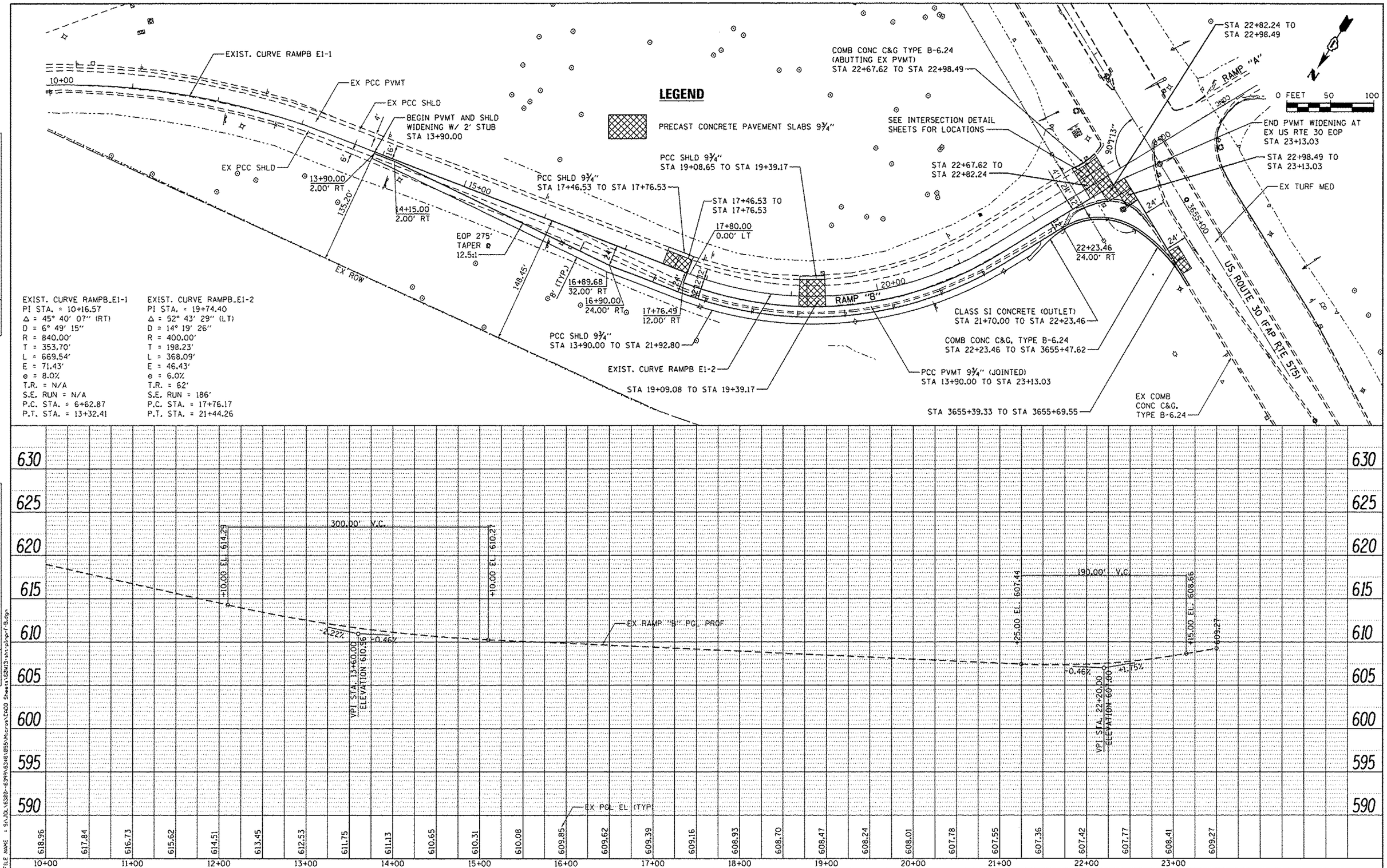

EXIST. CURVE RAMPB_E1-1
PI STA. = 10+16.57
Δ = 45° 40' 07" (RT)
D = 6° 49' 15"
R = 840.00'
T = 353.70'
L = 669.54'
E = 71.43'
e = 8.0%
T.R. = N/A
S.E. RUN = N/A
P.C. STA. = 6+62.87
P.T. STA. = 13+32.41

EXIST. CURVE RAMPB_E1-2
PI STA. = 19+74.40
Δ = 52° 43' 29" (LT)
D = 14° 19' 26"
R = 400.00'
T = 198.23'
L = 368.09'
E = 46.43'
e = 6.0%
T.R. = 62'
S.E. RUN = 186'
P.C. STA. = 17+76.17
P.T. STA. = 21+44.26

PLAN: SURVEYED ___ PLOTTED ___ ALIGNMENT CHECKED ___ RT. OF WAY STAKED ___ FIELD BOOK ___ NO. ___ BY ___ DATE ___

PROFILE: SURVEYED ___ PLOTTED ___ GRADES CHECKED ___ B.M. NOTED ___ R.O.W. STAKED ___ FIELD BOOK ___ NO. ___ BY ___ DATE ___

FILE NAME = S:\JOL\6328-6399\6348\055\Micro\CADD Sheets\60W13-ch1-plprf-B.dgn

SA STRAND ASSOCIATES®
1170 SOUTH HOUBOLT ROAD
JOLIET, ILLINOIS 60431
(815) 744-4200

USER NAME = dennisv	DESIGNED - JLB	REVISED -
MODEL NAME = Default	DRAWN - DJW	REVISED -
PLOT SCALE = 100.0000 ' / in.	CHECKED - BMA	REVISED -
PLOT DATE = 12/18/2013	DATE - 12/17/13	REVISED -

STATE OF ILLINOIS
DEPARTMENT OF TRANSPORTATION

RAMP "B" PLAN AND PROFILE

SCALE: 50H-5V | SHEET OF SHEETS | STA. TO STA.

F.A.P. RTE.	SECTION	COUNTY	TOTAL SHEETS	SHEET NO.
575	14-N	WILL	163	31

CONTRACT NO. 60W13

ILLINOIS FED. AID PROJECT

EXIST. CURVE RAMPD_E1-3
PI STA. = 19+97.00
Δ = 63° 07' 00" (LT)
D = 14° 39' 13"
R = 391.00'
T = 240.15'
L = 430.72'
E = 67.86'
e = 6.0%
T.R. = 75'
S.E. RUN = 175'
P.C. STA. = 17+56.85
P.T. STA. = 21+87.57

EXIST. CURVE US30_E1-2
PI STA. = 3637+43.48
Δ = 15° 28' 53" (LT)
D = 2° 14' 18"
R = 2,559.82'
T = 347.95'
L = 691.66'
E = 23.54'
e = -----
T.R. = -----
S.E. RUN = -----
P.C. STA. = 3633+95.53
P.T. STA. = 3640+87.19

EXIST. CURVE US30_E1-3
PI STA. = 3643+37.81
Δ = 7° 19' 17" (LT)
D = 3° 22' 32"
R = 1,697.42'
T = 108.60'
L = 216.90'
E = 3.47'
e = -----
T.R. = -----
S.E. RUN = -----
P.C. STA. = 3642+29.21
P.T. STA. = 3644+46.12

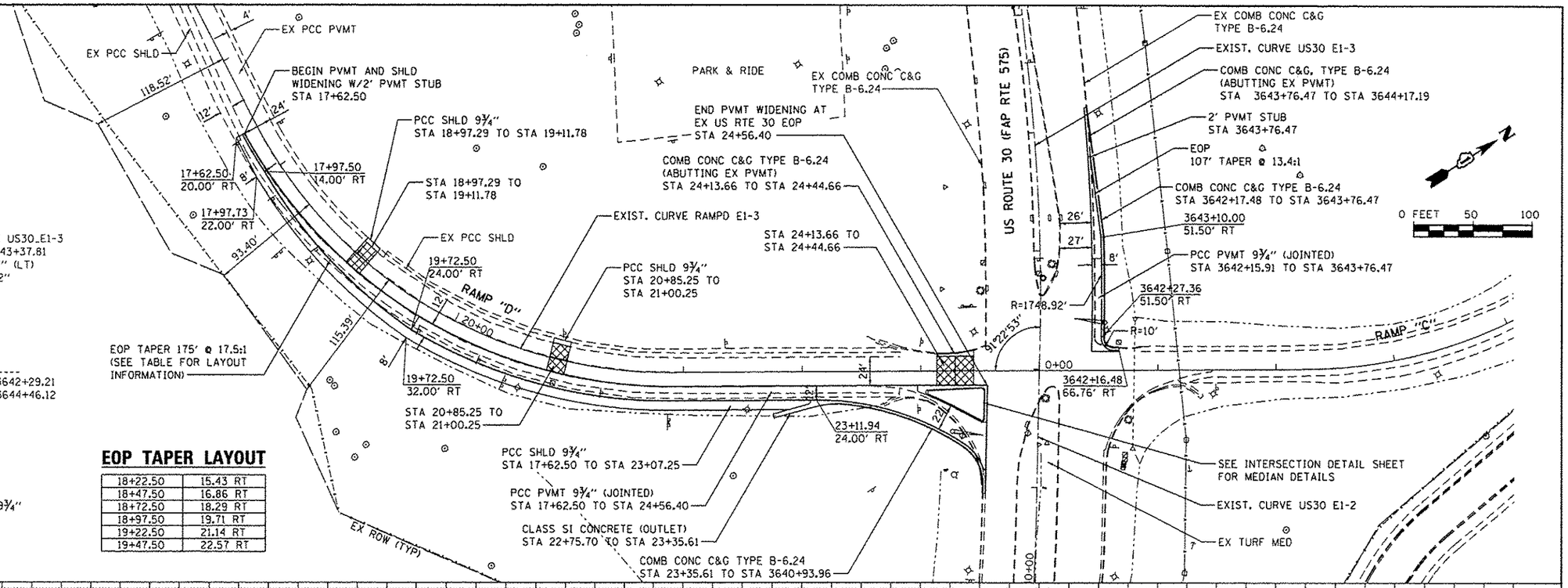

LEGEND

PRECAST CONCRETE PAVEMENT SLABS 9¾"

EOP TAPER LAYOUT

18+22.50	15.43 RT
18+47.50	16.86 RT
18+72.50	18.29 RT
18+97.50	19.71 RT
19+22.50	21.14 RT
19+47.50	22.57 RT

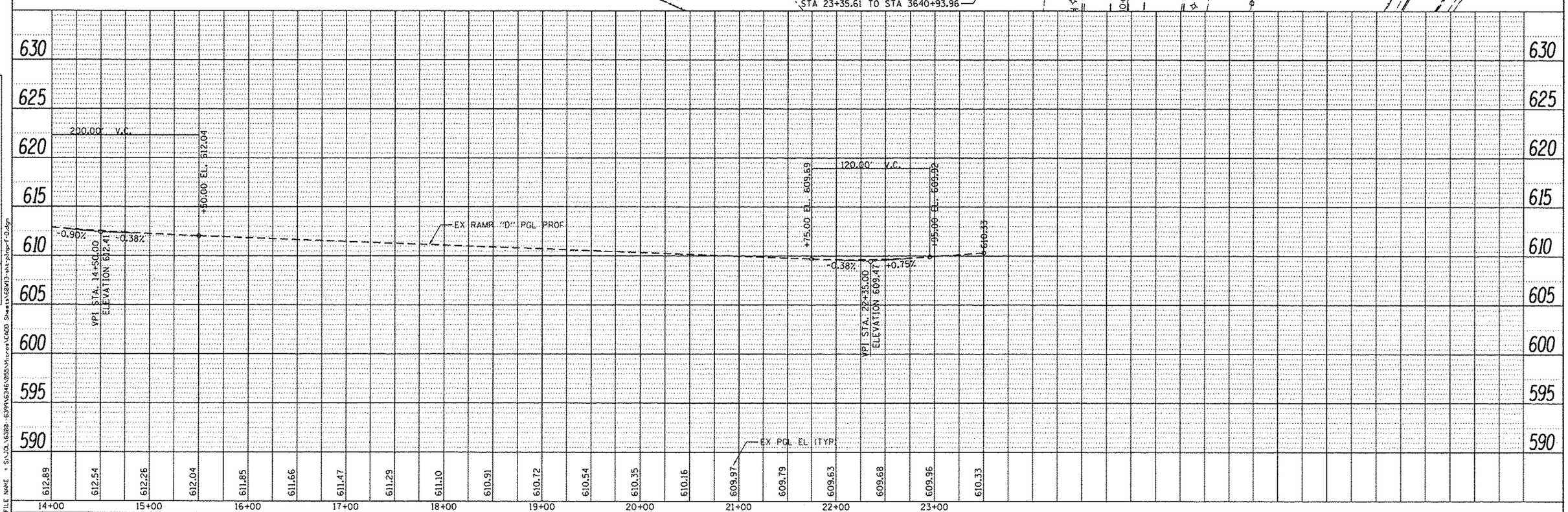

STRAND ASSOCIATES®
1170 SOUTH HOUBOLT ROAD
JOLIET, ILLINOIS 60431
(815) 744-4200

USER NAME = dennisw	DESIGNED - JLB	REVISED -
MODEL NAME = Default	DRAWN - DJW	REVISED -
PLOT SCALE = 100.0000 ' / in.	CHECKED - BMA	REVISED -
PLOT DATE = 12/18/2013	DATE - 12/17/13	REVISED -

STATE OF ILLINOIS
DEPARTMENT OF TRANSPORTATION

RAMP "D" PLAN AND PROFILE

SCALE: 50H-5V | SHEET OF SHEETS | STA. TO STA.

F.A.P. RTE.	SECTION	COUNTY	TOTAL SHEETS	SHEET NO.
575	14-N	WILL	163	32

CONTRACT NO. 60W13
ILLINOIS FED. AID PROJECT

PLAN — NOTE BOOK NO. — SURVEYED — PLOTTED — ALIGNMENT CHECKED — RT. OF WAY CHECKED — CADD FILE NAME — DATE — BY

PROFILE — NOTE BOOK NO. — SURVEYED — PLOTTED — GRADES CHECKED — B.M. NOTED — STRUCTURE NOTATIONS CHKD

FILE NAME = S:\JOL\63B8---6399\6348\955\Microsys\CADD Sheets\60W13-sht-plprof-D.dgn

SUGGESTED STAGES OF CONSTRUCTION & TRAFFIC CONTROL

THE FOLLOWING SEQUENCE OF TRAFFIC CONTROL IS SUGGESTED. VARIATIONS MAY BE MADE, WITH THE APPROVAL OF THE ENGINEER, IF THE PREVAILING SITE CONDITIONS AT THE TIME OF CONSTRUCTION ALLOW. CONTRACTOR SHALL MAINTAIN TRAFFIC FLOW ON EXIT RAMPS B, D AND US ROUTE 30 AT ALL TIMES.

PROVIDE TRAFFIC CONTROL AS SHOWN ON THE SUGGESTED STAGES OF CONSTRUCTION & TRAFFIC CONTROL PLANS, COORDINATE INSTALLATION OF TEMPORARY PAVEMENT MARKINGS AND OTHER TRAFFIC CONTROL DEVICES WITH THE EXISTING TRAFFIC PATTERNS AT THE ENDS OF THE PROJECT.

STAGE 1

1. USE THE SUGGESTED STAGES OF CONSTRUCTION AND TRAFFIC CONTROL PLAN SHEETS FOR RAMPS B, D AND U.S. ROUTE 30 - STAGE 1.
2. USE TEMPORARY CONCRETE BARRIER AND/OR DRUMS, AS SHOWN IN THE PLANS, FOR TRAFFIC CONTROL BETWEEN THE WORK AREA AND TRAVEL LANES.
3. INSTALL TEMPORARY TRAFFIC SIGNALS AND EQUIPMENT AT BOTH RAMP JUNCTIONS. DEACTIVATE AND REMOVE EXISTING TRAFFIC SIGNAL EQUIPMENT WHEN TEMPORARY IS ACTIVATED. SEE TRAFFIC SIGNAL PLANS.
4. INSTALL TEMPORARY LIGHTING AND EQUIPMENT ALONG RAMPS B AND D. REMOVE EXISTING LIGHT POLES WHEN TEMPORARY IS ACTIVATED. SEE LIGHTING PLANS.
5. RAMP B: MAINTAIN ONE (1) EXIT LANE FROM I-55 AND NARROW TO 11 FT. BEGIN TWO (2) LANES NEAR STA 20+00, EACH AT 12 FT WIDE. RELOCATE EXISTING SIGNS WITHIN WORK ZONE. CONSTRUCT NEW LANE ALONG RIGHT SIDE OF RAMP B. REPLACE EXISTING PAVEMENT AT NEAR US-30 WITH PCC PRECAST SLABS. INSTALL PROPOSED TRAFFIC SIGNALS AND EQUIPMENT. SEE SIGNAL SHEETS FOR PROPOSED INSTALLATION PLANS. INSTALL NEW LIGHTING AT PROPOSED LOCATIONS AND REMOVE TEMPORARY LIGHTING.
6. RAMP D: MAINTAIN ONE (1) EXIT LANE FROM I-55 AND WIDEN TO TWO (2) LANES AT STA 17+66, EACH AT 11 FT WIDE. RELOCATE EXISTING SIGNS WITHIN WORK ZONE. CONSTRUCT NEW LANE ALONG RIGHT SIDE OF RAMP D. REPLACE EXISTING PAVEMENT AT NOTED LOCATIONS WITH PCC PRECAST SLABS. INSTALL NEW LIGHTING AT PROPOSED LOCATIONS AND REMOVE TEMPORARY LIGHTING.
7. U.S. ROUTE 30: CONSTRUCT WIDENED PAVEMENT AND PCC PRECAST SLAB ALONG NORTH SIDE OF U.S. ROUTE 30 DURING NIGHT TIME LANE CLOSURES.
8. COMPLETE LANDSCAPING AND ASSOCIATED EROSION CONTROL PER CONTRACT PLANS.

STAGE 2

1. USE THE SUGGESTED STAGES OF CONSTRUCTION AND TRAFFIC CONTROL PLAN SHEETS FOR RAMP D AND U.S. ROUTE 30 - STAGE 2. USE NIGHT-TIME LANE CLOSURES FOR ALL PCC PRECAST PAVEMENT PATCHING WORK FOR RAMP B, RAMP D AND U.S. ROUTE 30.
2. RAMP B: REPLACE EXISTING PAVEMENT AT NOTED LOCATIONS WITH PCC PRECAST SLABS.
3. RAMP D: MAINTAIN ONE (1) EXIT LANE FROM I-55 AND SPLIT TO TWO (2) LANES AT STA 17+74, EACH AT 12 FT WIDE. AT STA 22+54, THE LEFT LANE NARROWS TO 11 FT WIDE AND THE RIGHT TURN LANE BECOMES 16 FT WIDE AND VEERS OFF TO ALLOW WORK ZONE FOR CONCRETE ISLAND CONSTRUCTION AND PCC PRECAST PAVEMENT PATCHING. INSTALL PROPOSED TRAFFIC SIGNALS AND EQUIPMENT. REMOVE TEMPORARY TRAFFIC SIGNALS AND EQUIPMENT.
4. U.S. ROUTE 30: MAINTAIN TWO (2) LANES IN EACH DIRECTION. RESTORE 12' LANES ALONG WB US-30. KEEP EB US-30 AT 11' LANES MINIMUM WIDTH.

STAGE 2A

1. RAMP D: THE LEFT TURN LANE SHALL SHIFT TO THE NEW LANE NEAREST TO THE NEW ISLAND. COMPLETE REMAINING PAVEMENT PCC PRECAST PATCHING ALONG LEFT LANE. THIS WORK TO BE DONE AFTER NEW ISLAND IS CONSTRUCTED. PCC PRECAST PAVEMENT PATCHING SHALL BE INSTALLED USING NIGHT-TIME LANE CLOSURES.

GENERAL NOTES

1. THE CONTRACTOR SHALL MAINTAIN A MINIMUM OF ONE 11' THRU-LANE IN EACH DIRECTION FOR TWO-WAY TRAFFIC FLOW UNLESS OTHERWISE SPECIFIED. A MINIMUM BUFFER OF 5' SHALL BE MAINTAINED ON RAMPS B AND D AT ALL TIMES BETWEEN TRAVEL LANES AND CONSTRUCTION UNLESS OTHERWISE NOTED IN THE PLANS.
2. THE CONTRACTOR SHALL MAINTAIN TRAFFIC IN ACCORDANCE WITH THE IDOT SPECIAL PROVISIONS, IDOT HIGHWAY STANDARDS, IDOT STANDARD SPECIFICATIONS, PLAN SPECIFICATIONS, AND AS DIRECTED BY THE ENGINEER.
3. THE ENGINEER SHALL BE INFORMED 48 HOURS IN ADVANCE OF CHANGES IN CONSTRUCTION STAGING.
4. THE CONTRACTOR SHALL CONTACT THE DISTRICT ONE ARTERIAL TRAFFIC CONTROL SUPERVISOR AT (847) 705-4470 AND THE DISTRICT ONE EXPRESSWAY TRAFFIC CONTROL SUPERVISOR AT (847) 705-4155 A MINIMUM OF 72 HOURS IN ADVANCE OF BEGINNING WORK.
5. STAGED CONSTRUCTION SHALL NOT COMMENCE UNTIL ALL CONFLICTING SIGNS, PAVEMENT MARKINGS, AND TRAFFIC CONTROL DEVICES HAVE BEEN REMOVED OR COVERED AND TEMPORARY TRAFFIC CONTROL MEASURES HAVE BEEN PLACED TO THE SATISFACTION OF THE ENGINEER.
6. THE CONTRACTOR SHALL BE REQUIRED TO REMOVE ALL EXISTING PAVEMENT MARKINGS WHICH CONFLICT WITH THE DESIGNATED TRAFFIC CONTROL PLAN, INCLUDING PRIOR TO LANE CLOSURES. THIS SHALL BE PAID AS PAVEMENT MARKING REMOVAL.
7. ALL TEMPORARY PAVEMENT MARKINGS SHOWING DETERIORATION AFTER 7 DAYS SHALL BE REPLACED BY THE CONTRACTOR AS DIRECTED BY THE ENGINEER. SUFFICIENT QUANTITIES FOR 1 PLACEMENT AND 1 REPLACEMENTS HAVE BEEN PROVIDED FOR EACH STAGE. ALL MARKINGS THAT REQUIRE REPLACEMENT PRIOR TO 7 DAYS OF SERVICE OR REPLACEMENT AFTER THE INITIAL REPLACEMENT SHALL BE REPLACED BY THE CONTRACTOR AT HIS OWN EXPENSE.
8. DRUMS OR TYPE II BARRICADES AND VERTICAL PANELS SHALL BE EQUIPPED WITH MONODIRECTIONAL STEADY BURN LIGHTS AND SHALL BE PLACED AT 50' INTERVALS ALONG THE PROPOSED CONSTRUCTION WORK ZONE, AT 25' INTERVALS IN CURVES, AND AT 25' INTERVALS IN TAPER SECTIONS AS INDICATED ON THE PLANS OR AS DIRECTED BY THE ENGINEER. TYPE II BARRICADES THAT HAVE A MINIMUM REFLECTORIZED AREA OF 288 SQUARE INCHES AND ARE 2' IN WIDTH SHALL BE USED IN ALL STAGES OF CONSTRUCTION.
9. THE FURNISHING, INSTALLING, AND RELOCATION OF ALL TRAFFIC SIGNS SHALL BE IN ACCORDANCE WITH THE MANUAL ON UNIFORM TRAFFIC CONTROL DEVICES FOR STREETS AND HIGHWAYS (MUTCD), ILLINOIS SUPPLEMENT TO THE MUTCD, IDOT SPECIAL PROVISIONS, IDOT HIGHWAY STANDARDS, IDOT STANDARD SPECIFICATIONS, CONTRACT SPECIFICATIONS, AND AS DIRECTED BY THE ENGINEER. ALL CONFLICTING TRAFFIC SIGNS SHALL BE COVERED AS DIRECTED BY THE ENGINEER. THIS WORK SHALL BE INCLUDED IN THE COST OF TRAFFIC CONTROL AND PROTECTION (SPECIAL) AND TRAFFIC CONTROL AND PROTECTION (EXPRESSWAYS).
10. TEMPORARY CONCRETE BARRIER AND TEMPORARY IMPACT ATTENUATORS SHALL BE PLACED AS INDICATED IN THE PLANS. TEMPORARY CONCRETE BARRIER SHALL BE PLACED WHERE THERE IS A 2' OR GREATER DROP OFF AT THE EDGE OF PAVEMENT OR AS DIRECTED BY THE ENGINEER. FURNISHING, INSTALLING AND RELOCATION OF TEMPORARY CONCRETE BARRIER AND TEMPORARY IMPACT ATTENUATORS SHALL BE IN ACCORDANCE WITH IDOT SPECIAL PROVISIONS, IDOT HIGHWAY STANDARDS, STANDARD SPECIFICATIONS, SPECIAL PROVISIONS, AND AS DIRECTED BY THE ENGINEER.
11. THE CONTRACTOR SHALL PROVIDE ADVANCE NOTICE CONSTRUCTION SIGNING. SIGNS SHALL BE ERECTED ONE WEEK IN ADVANCE OF THE START OF CONSTRUCTION AND SHALL BE REMOVED OR COVERED WHEN PROTECTION IS NOT REQUIRED.
12. THE CONTRACTOR SHALL BE RESPONSIBLE FOR ENSURING EXISTING AND/OR PROPOSED DRAINAGE AND ROADWAY LIGHTING DURING THE DURATION OF THE PROJECT.
13. THE CONTRACTOR SHALL BE RESPONSIBLE FOR PROVIDING AND MAINTAINING ALL BARRIERS, LABOR, SIGNS AND TRAFFIC CONTROL DEVICES NECESSARY FOR THE MAINTENANCE OF TRAFFIC UNLESS NOTED OTHERWISE IN THE SPECIAL PROVISIONS.
14. ALL ARROW BOARDS SHALL HAVE SOLAR POWER CAPABILITY.
15. ALL TRAFFIC CONTROL DEVICES SHALL BE REMOVED, COVERED OR TURNED AWAY FROM TRAFFIC IMMEDIATELY WHEN THEY ARE NO LONGER NECESSARY. WHEN A SIGN IS COVERED, ITS POST SHALL HAVE A REFLECTIVE 3" BY 6" DELINEATOR INSTALLED.
16. IMMEDIATELY AFTER THE COMPLETION OF CONSTRUCTION, THE CONTRACTOR SHALL RESTORE ALL PERMANENT PAVEMENT MARKINGS, SIGNS, AND OTHER TRAFFIC CONTROL DEVICES THAT WERE COVERED, REMOVED, DAMAGED, OR OTHERWISE AFFECTED BY CONSTRUCTION.
17. A 3.5 FOOT CLEAR DEFLECTION ZONE IS REQUIRED FROM THE BACK OF THE TEMPORARY CONCRETE BARRIER WALL TO ANY OBSTRUCTION OR DROP OFF IN THE WORK ZONE. IF THE 3.5 FOOT CLEAR ZONE CANNOT BE MAINTAINED, THE TEMPORARY CONCRETE BARRIER WALL SHALL BE ANCHORED TO THE PAVEMENT THRU THE 3 ANCHORING HOLES ON THE TRAFFIC SIDE OF THE BARRIER WALL. COST OF THIS WORK SHALL NOT BE PAID FOR SEPARATELY, BUT SHALL BE INCLUDED IN THE COST OF THE TEMPORARY CONCRETE BARRIER WALL.
18. TRAFFIC CONTROL AND PROTECTION WORK SHALL BE DONE AS AFOREMENTIONED AND IN ACCORDANCE WITH THE FOLLOWING IDOT TRAFFIC CONTROL STANDARDS AND AS DIRECTED BY THE ENGINEER. THESE STANDARDS WILL NOT BE PAID FOR SEPARATELY BUT WILL BE INCLUDED IN THE PRICE FOR TRAFFIC CONTROL AND PROTECTION (EXPRESSWAY) AS A LUMP SUM PAY ITEM.

NOTE: BOXED ITEMS ARE INCLUDED IN THE COST OF THE CONTRACT.

IDOT HIGHWAY STANDARDS:

635001-01	DELINEATORS
635011-02	REFLECTOR MARKER AND MOUNTING DETAILS
643001-01	SAND MODULE IMPACT ATTENUATORS
701001-02	OFF-RD OPERATIONS, 2L, 2W, MORE THAN 15' (4.5 M) AWAY
701101-03	OFF-RD OPERATIONS, MULTILANE, 15' TO 24" FROM PAVEMENT EDGE
701427-01	LANE CLOSURE, MULTILANE, INTERMITTENT OR MOVING OPERATIONS, FOR SPEEDS <= 40 MPH
701701-08	URBAN LANE CLOSURE/ MULTILANE INTERSECTION
701901-02	TRAFFIC CONTROL DEVICES
704001-07	TEMPORARY CONCRETE BARRIER

IDOT DISTRICT 1 DETAILS:

TC08	FREEWAY ENTRANCE AND EXIT RAMP CLOSURE DETAILS
TC10	TRAFFIC CONTROL AND PROTECTION FOR SIDE ROADS, INTERSECTIONS, AND DRIVEWAYS
TC11	TYPICAL APPLICATIONS RAISED REFLECTIVE PAVEMENT MARKERS (SNOW PLOW RESISTANT)
TC13	DISTRICT ONE TYPICAL PAVEMENT MARKINGS
TC14	TRAFFIC CONTROL AND PROTECTION AT TURN BAYS (TO REMAIN OPEN TO TRAFFIC)
TC16	PAVEMENT MARKING LETTERS AND SYMBOLS FOR TRAFFIC STAGING
TC17	TRAFFIC CONTROL DETAILS FOR FREEWAY SHOULDER CLOSURES AND PARTIAL RAMP CLOSURES
TC18	SIGNING FOR FLAGGING OPERATIONS AT WORK ZONE OPENINGS
TC22	ARTERIAL ROAD INFORMATION SIGN
TC27	MILE POST MARKERS - GORE SIGNS - MAJOR GUIDE SIGN LAYOUT - ARROWS

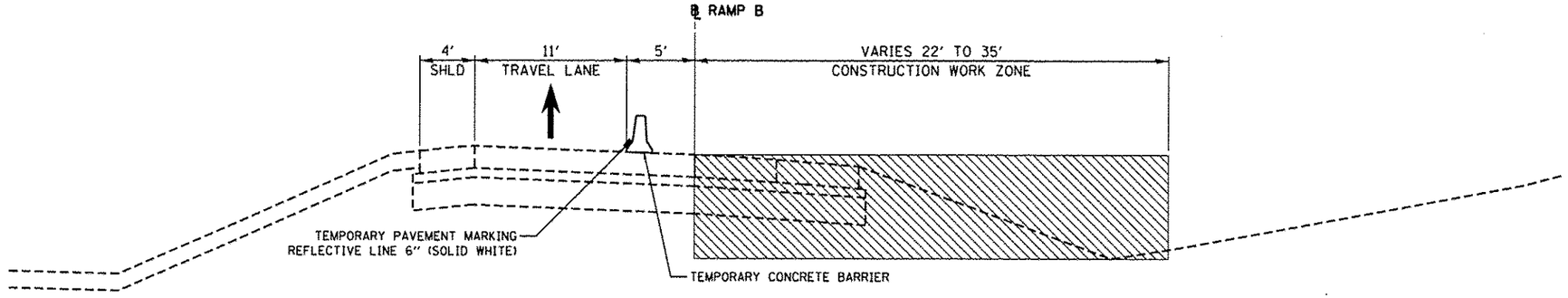

STAGE 1
RAMP "B"
STA 13+78 TO STA 18+34

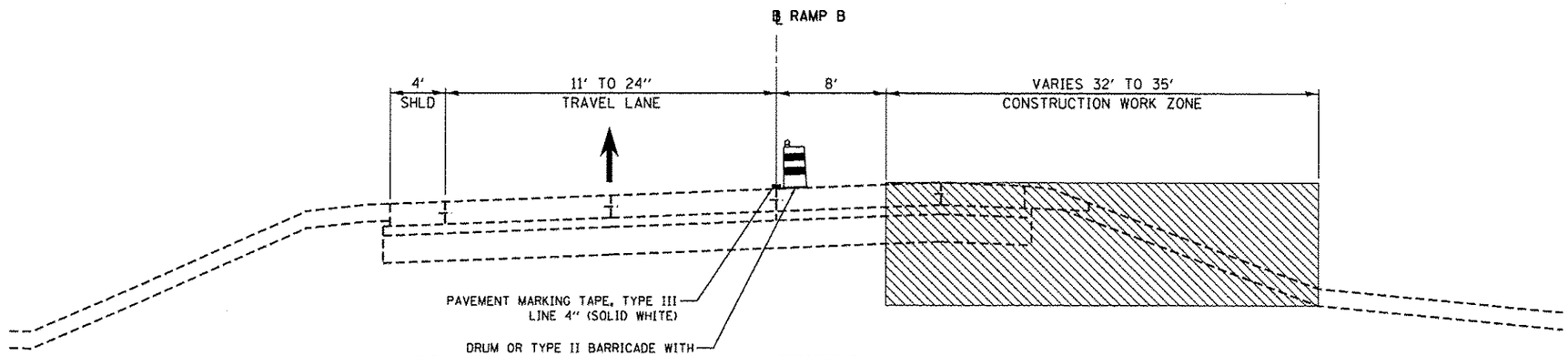

STAGE 1
RAMP "B"
STA 18+34 TO STA 21+18

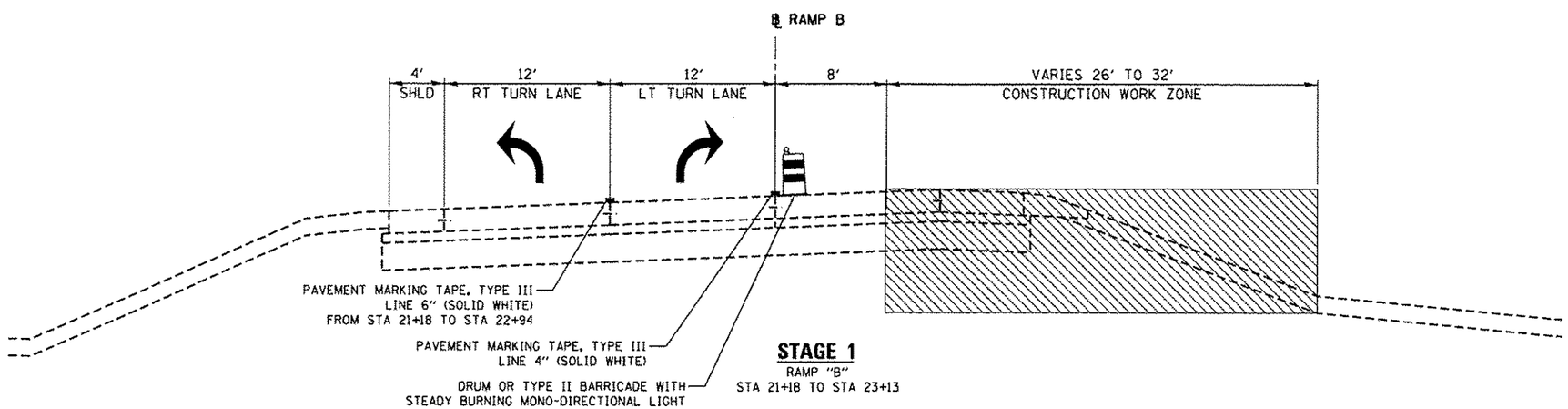

STAGE 1
RAMP "B"
STA 21+18 TO STA 23+13

SINGH + ASSOCIATES INC. CONSULTING ENGINEERS	USER NAME = .USER.	DESIGNED - OB	REVISED -	STATE OF ILLINOIS DEPARTMENT OF TRANSPORTATION	SUGGESTED STAGES OF CONSTRUCTION AND TRAFFIC CONTROL RAMP B TYPICAL SECTIONS – STAGE 1	F.A.P. RTE.	SECTION	COUNTY	TOTAL SHEETS	SHEET NO.
	FILE NAME = 0160W13-sht-staging2.dgn	DRAWN - AS	REVISED -			575	14-N	WILL	163	34
	PLOT SCALE = 5.0000 ' / in.	CHECKED - IY	REVISED -					CONTRACT NO. 60W13		
	PLOT DATE = 12/17/2013	DATE - 12/17/2013	REVISED -		SCALE: N/A SHEET 1 OF 4 SHEETS STA. N/A TO STA. N/A		ILLINOIS FED. AID PROJECT			

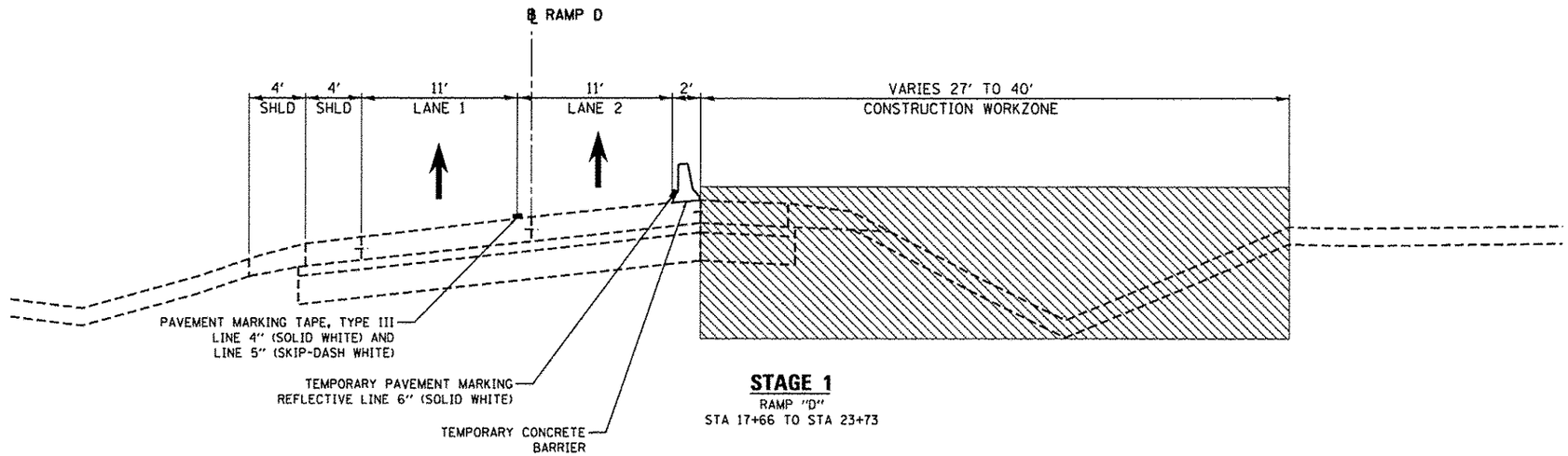

STAGE 1
RAMP "D"
STA 17+66 TO STA 23+73

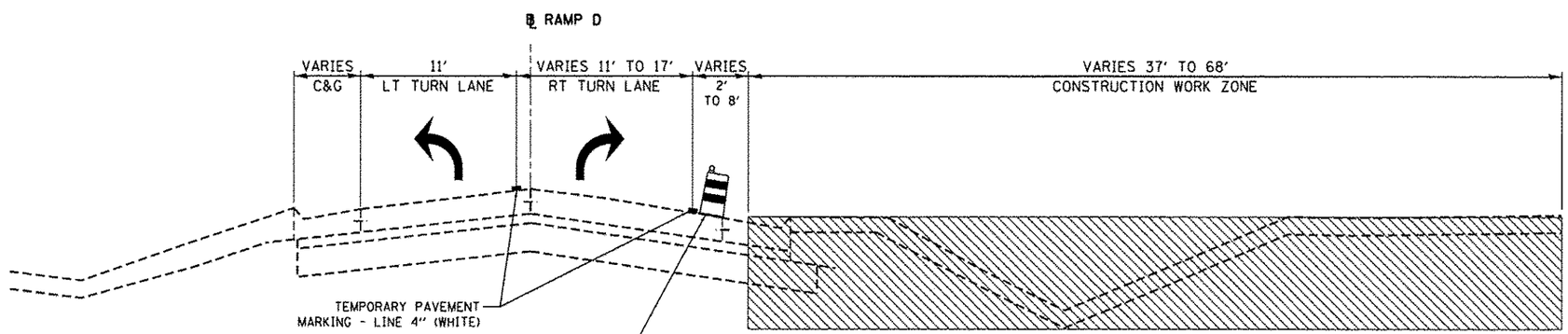

STAGE 1
RAMP "D"
STA 23+73 TO STA 24+57

SINGH + ASSOCIATES, INC. CONSULTING ENGINEERS	USER NAME = .USER.	DESIGNED - OB	REVISED -	STATE OF ILLINOIS DEPARTMENT OF TRANSPORTATION	SUGGESTED STAGES OF CONSTRUCTION AND TRAFFIC CONTROL RAMP D TYPICAL SECTIONS – STAGE 1	F.A.P. RTE.	SECTION	COUNTY	TOTAL SHEETS	SHEET NO.
	FILE NAME = D160W13-sht-staging3.dgn	DRAWN - AS	REVISED -			575	14-N	WILL	163	35
	PLOT SCALE = 5.0000 ' / in.	CHECKED - IY	REVISED -					CONTRACT NO. 60W13		
	PLOT DATE = 12/17/2013	DATE - 12/17/2013	REVISED -		SCALE: N/A SHEET 2 OF 4 SHEETS STA. N/A TO STA. N/A		ILLINOIS FED. AID PROJECT			

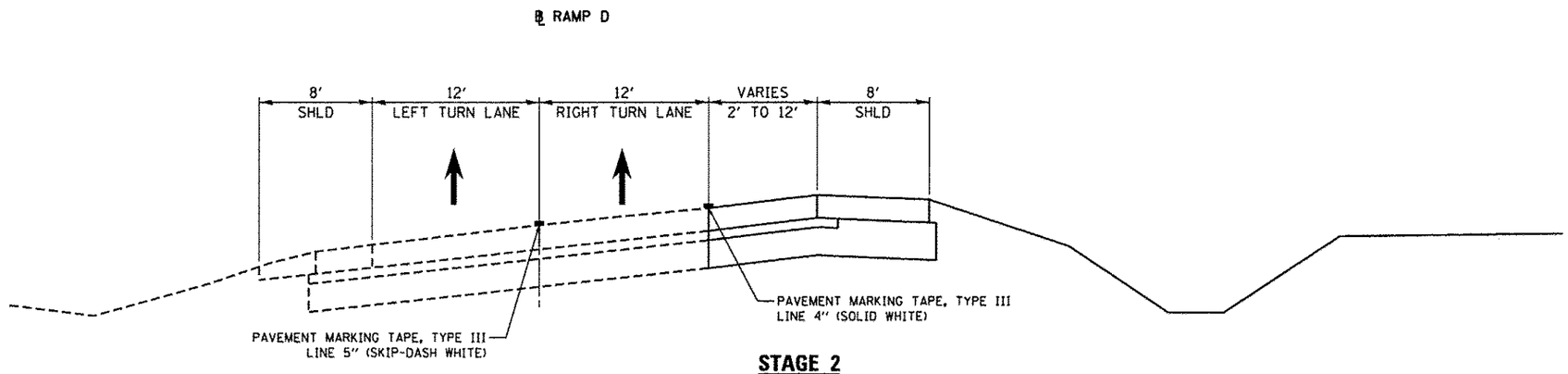

STAGE 2
RAMP "D"
STA 17+74 TO STA 22+19

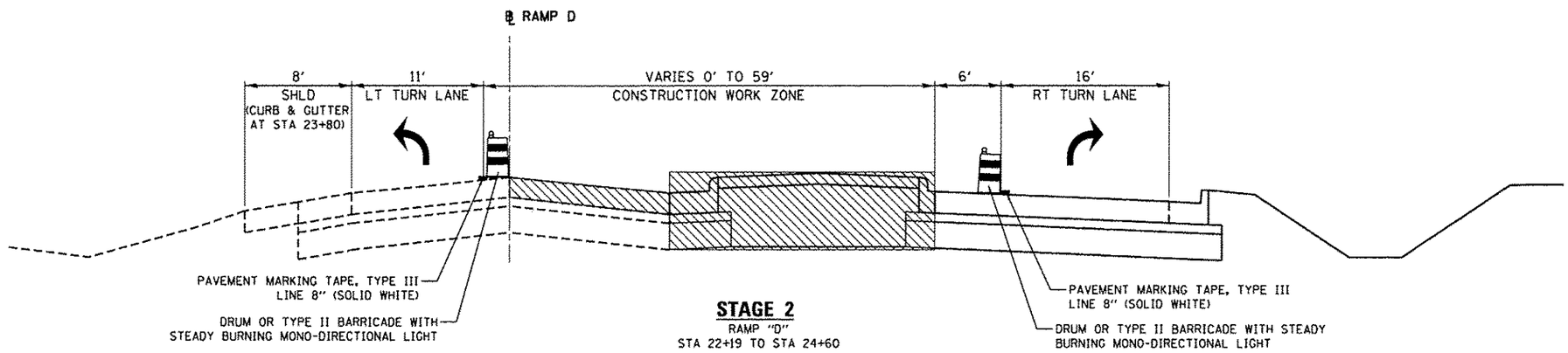

STAGE 2
RAMP "D"
STA 22+19 TO STA 24+60

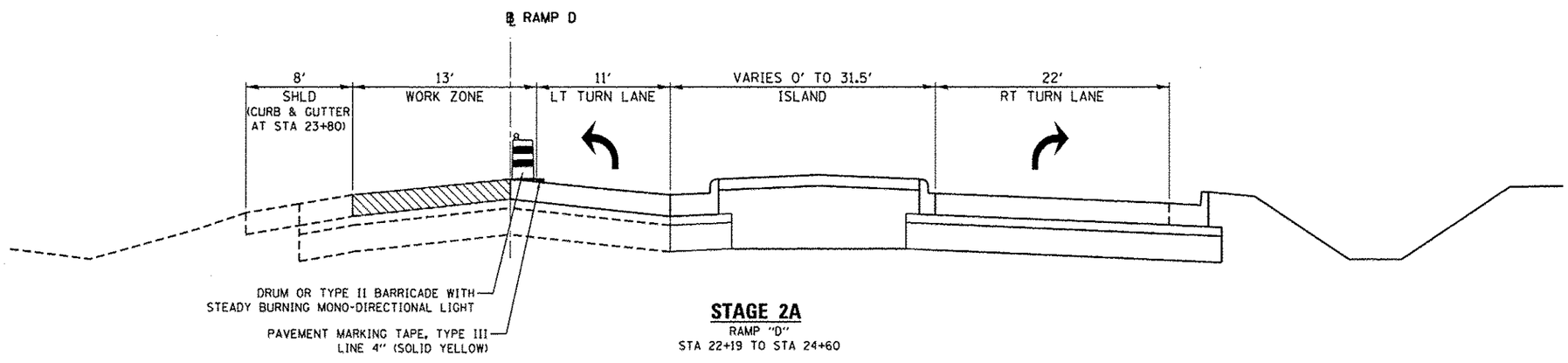

STAGE 2A
RAMP "D"
STA 22+19 TO STA 24+60

SINGH + ASSOCIATES, INC. CONSULTING ENGINEERS	USER NAME = _USER_	DESIGNED - OB	REVISED -	STATE OF ILLINOIS DEPARTMENT OF TRANSPORTATION	SUGGESTED STAGES OF CONSTRUCTION AND TRAFFIC CONTROL RAMP D TYPICAL SECTIONS – STAGE 2 AND 2A
	FILE NAME = 0160W13-sht-staging4.dgn	DRAWN - AS	REVISED -		
	PLOT SCALE = 5.0000 ' / in.	CHECKED - IY	REVISED -		
	PLOT DATE = 12/17/2013	DATE - 12/17/2013	REVISED -		SCALE: N/A SHEET 3 OF 4 SHEETS STA. N/A TO STA. N/A

F.A.P. RTE.	SECTION	COUNTY	TOTAL SHEETS	SHEET NO.
575	14-N	WILL	163	36
		CONTRACT NO. 60W13		
		ILLINOIS FED. AID PROJECT		

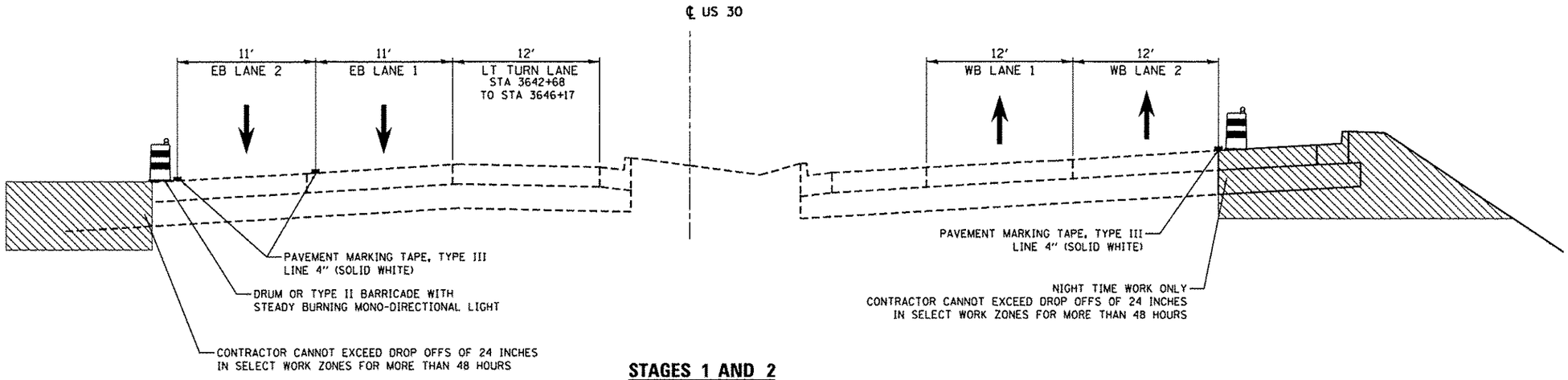

STAGES 1 AND 2

U.S. ROUTE 30
WB: STA 3642+16 TO STA 3644+17
EB: STA 3640+03 TO STA 3644+69

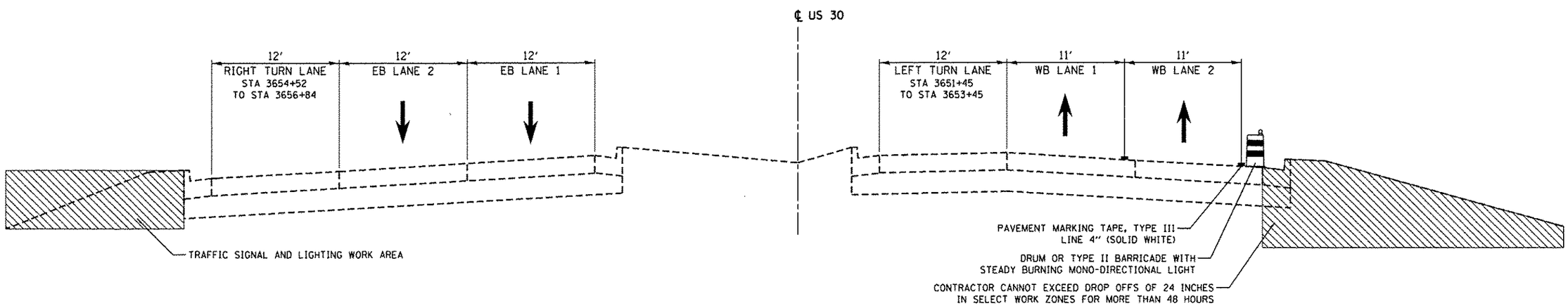

STAGES 1 AND 2

U.S. ROUTE 30
WB: STA 3651+45 TO STA 3655+84
EB: STA 3651+45 TO STA 3656+00

SINGH + ASSOCIATES, INC. CONSULTING ENGINEERS	USER NAME = _USER_	DESIGNED - OB	REVISED -	STATE OF ILLINOIS DEPARTMENT OF TRANSPORTATION	SUGGESTED STAGES OF CONSTRUCTION AND TRAFFIC CONTROL US 30 TYPICAL SECTIONS – STAGES 1 AND 2	F.A.P. RTE.	SECTION	COUNTY	TOTAL SHEETS	SHEET NO.
	FILE NAME = 0160W13-sht-staging5.dgn	DRAWN - AS	REVISED -			575	14-N	WILL	163	37
	PLOT SCALE = 5.0000 ' / in.	CHECKED - IY	REVISED -					CONTRACT NO. 60W13		
	PLOT DATE = 12/17/2013	DATE - 12/17/2013	REVISED -		SCALE: N/A SHEET 4 OF 4 SHEETS STA. N/A TO STA. N/A		ILLINOIS FED. AID PROJECT			

NOTES

1. PRIOR TO INSTALLING POST MOUNTED SIGNS,THE CONTRACTOR SHALL CONTACT J.U.L.I.E.
2. PORTABLE CHANGEABLE MESSAGE TO BE USED AT LOCATIONS AS DETERMINED BY THE ENGINEER.
3. ALL PAVEMENT MARKING USED FOR SUGGESTED STAGES OF CONSTRUCTION ARE TEMPORARY AND PER STANDARD SPECIFICATIONS FOR ROAD AND BRIDGE CONSTRUCTION, SECTION 703.
4. SEE SHEET 41 FOR US-30 TRAFFIC CONTROL AND STAGING.
5. SEE SIGNING PLAN SHEETS FOR SIGN REMOVAL/RELOCATION.
6. SEE ROADWAY LIGHTING PLAN SHEETS FOR LIGHTING REMOVAL, TEMPORARY LIGHTING, AND INSTALLATIONS OF LIGHTING.
7. PCC PRECAST SLABS TO BE INSTALLED USING NIGHT-TIME LANE CLOSURES.
8. CONTRACTOR CANNOT EXCEED DROP OFFS OF 24 INCHES IN SELECT WORK ZONES FOR MORE THAN 48 HOURS.
9. PCC PRECASE SLABS TO BE INSTALLED IN STAGE 2, USING NIGHT-TIME LANE CLOSURES.

LEGEND

- WORK ZONE
- DIRECTION OF TRAFFIC
- TEMPORARY PLASTIC DRUMS WITH STEADY BURN MONO-DIRECTIONAL LIGHTS
- IMPACT ATTENUATOR, NON REDIRECTION TL3
- TRAFFIC SIGN
- TEMP. CONC. BARRIER W/ WALL MARKERS TYPE C @ 25 FT CTRS.
- TYPE III BARRICADE WITH FLASHING MONODIRECTIONAL LIGHTS
- PAVEMENT TO BE REPLACED WITH PCC PRECAST SLAB

1. PAVEMENT MARKING TAPE, TYPE III - LINE 4" (SOLID WHITE)
2. PAVEMENT MARKING TAPE, TYPE III - LINE 5" (SKIP-DASH WHITE, 30' SKIP - 10' DASH)
3. PAVEMENT MARKING TAPE, TYPE III - LINE 4" (SOLID YELLOW)
4. PAVEMENT MARKING TAPE, TYPE III - LINE 24" (SOLID WHITE)
5. PAVEMENT MARKING TAPE, TYPE III - LETTERS AND SYMBOLS (SOLID WHITE)
6. PAVEMENT MARKING TAPE, TYPE III - LINE 6" (SOLID WHITE)

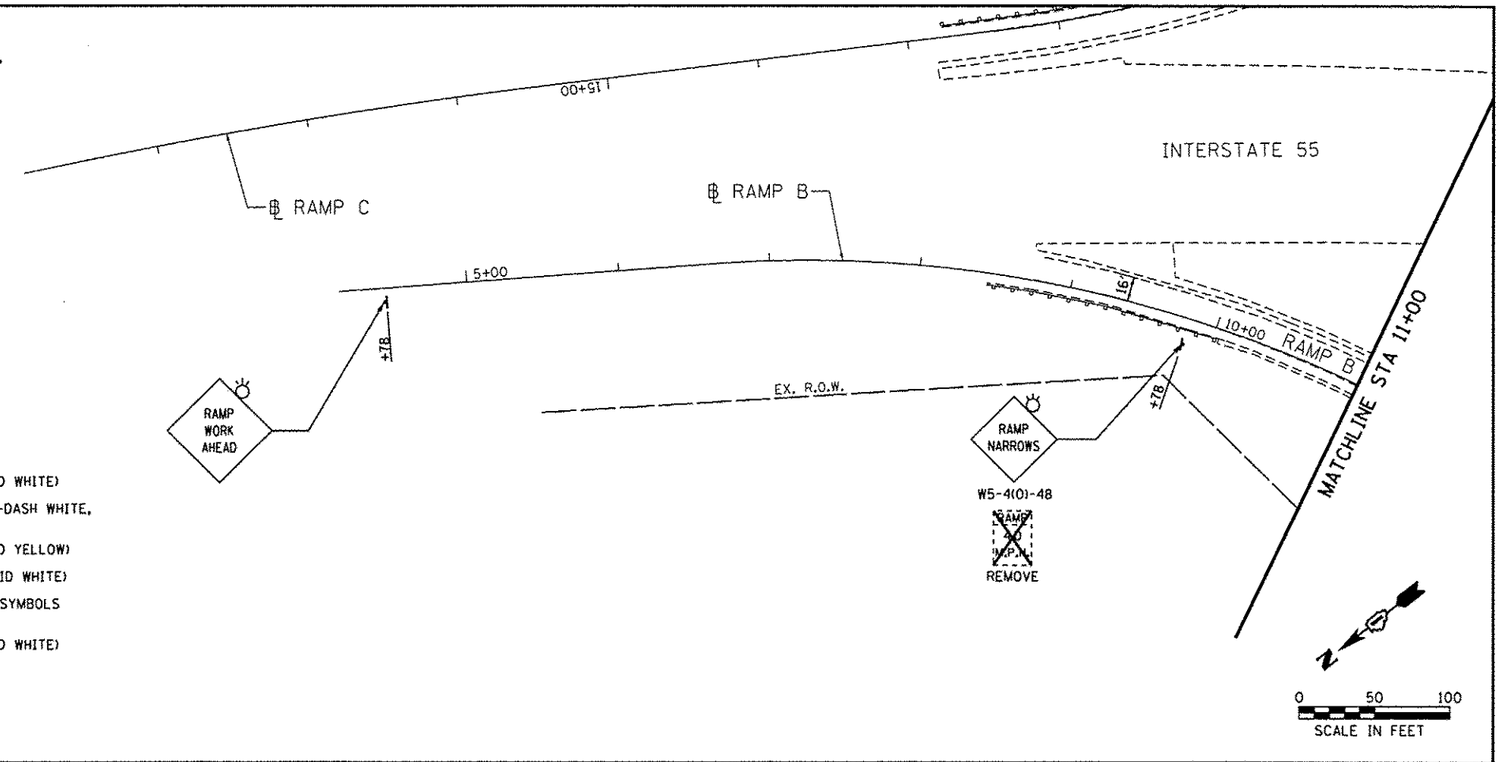

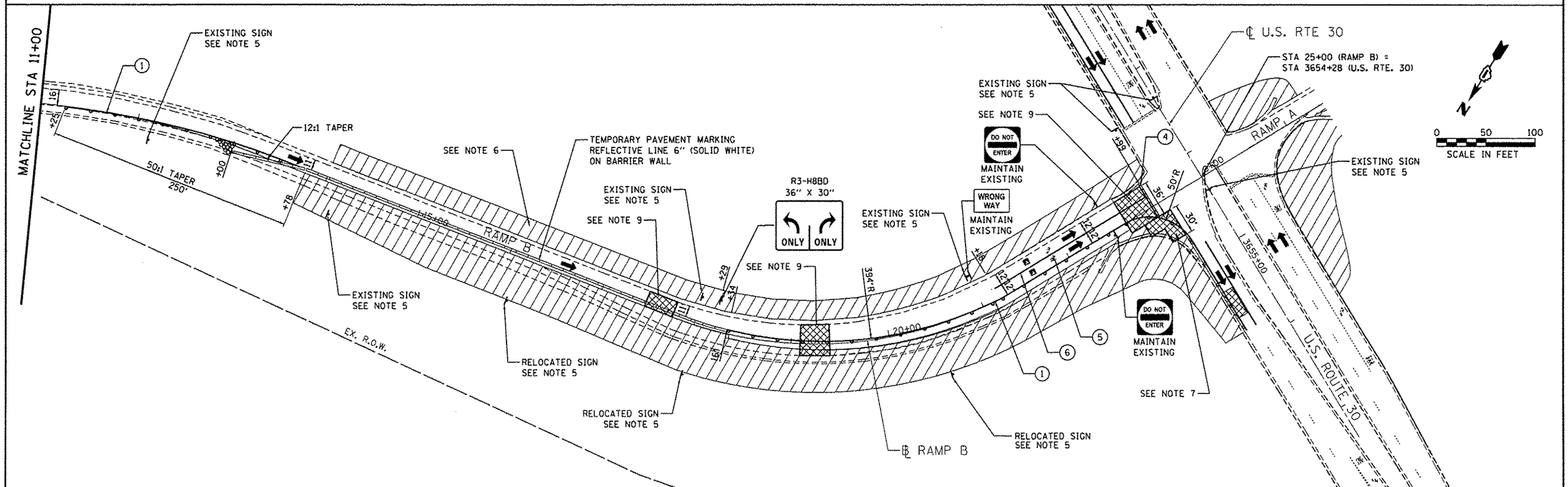

SINGH + ASSOCIATES, INC. CONSULTING ENGINEERS	USER NAME = _USER_	DESIGNED - AS/OB	REVISED -	STATE OF ILLINOIS DEPARTMENT OF TRANSPORTATION	SUGGESTED STAGES OF CONSTRUCTION AND TRAFFIC CONTROL RAMP B - STAGE 1	F.A.P. RTE.	SECTION	COUNTY	TOTAL SHEETS / SHEET NO.
	FILE NAME = D160W13-sht-staging6.dgn	DRAWN - AS/OB	REVISED -			575	14-N	WILL	163 / 38
	PLOT SCALE = 50.0000 ' / in.	CHECKED - IY	REVISED -					CONTRACT NO. 60W13	
	PLOT DATE = 12/17/2013	DATE - 12/17/2013	REVISED -		SCALE: 1" = 50' SHEET 1 OF 5 SHEETS STA. 5+00 TO STA. 23+50			ILLINOIS FED. AID PROJECT	

NOTES

1. PRIOR TO INSTALLING POST MOUNTED SIGNS, THE CONTRACTOR SHALL CONTACT J.U.L.I.E..
2. PORTABLE CHANGEABLE MESSAGE TO BE USED AT LOCATIONS AS DETERMINED BT THE ENGINEER.
3. ALL PAVEMENT MARKING TAPE USED FOR SUGGESTED STAGES OF CONSTRUCTION ARE TEMPORARY AND PER STANDARD SPECIFICATIONS FOR ROAD AND BRIDGE CONSTRUCTION, SECTION 703.
4. SEE SHEET 40 FOR US 30 TRAFFIC CONTROL AND STAGING.
5. SEE SIGNING PLAN SHEETS FOR SIGN REMOVAL/RELOCATION SCHEDULE.
6. CONTRACTOR CANNOT EXCEED DROP OFFS OF 24 INCHES IN SELECT WORK ZONES FOR MORE THAN 48 HOURS.
7. SEE ROADWAY LIGHTING PLAN SHEETS FOR LIGHTING REMOVAL, TEMPORARY LIGHTING, AND INSTALLATIONS OF LIGHTING.

LEGEND

- WORK ZONE
- DIRECTION OF TRAFFIC
- TEMPORARY PLASTIC DRUMS WITH STEADY BURN MONO-DIRECTIONAL LIGHTS
- IMPACT ATTENUATOR, NON REDIRECTION TL3
- TRAFFIC SIGN
- TEMP. CONC. BARRIER W/ WALL MARKERS TYPE C @ 25 FT CTRS.
- TYPE III BARRICADE WITH FLASHING MONODIRECTIONAL LIGHTS

1. PAVEMENT MARKING TAPE, TYPE III - LINE 4" (SOLID WHITE)
2. PAVEMENT MARKING TAPE, TYPE III - LINE 5" (SKIP-DASH WHITE, 30' SKIP - 10' DASH)
3. PAVEMENT MARKING TAPE, TYPE III - LINE 4" (SOLID YELLOW)
4. PAVEMENT MARKING TAPE, TYPE III - LINE 24" (SOLID WHITE)
5. PAVEMENT MARKING TAPE, TYPE III - LETTERS AND SYMBOLS (SOLID WHITE)
6. PAVEMENT MARKING TAPE, TYPE III - LINE 12" (SOLID WHITE)
7. PAVEMENT MARKING TAPE, TYPE III - LINE 6" (SOLID WHITE)

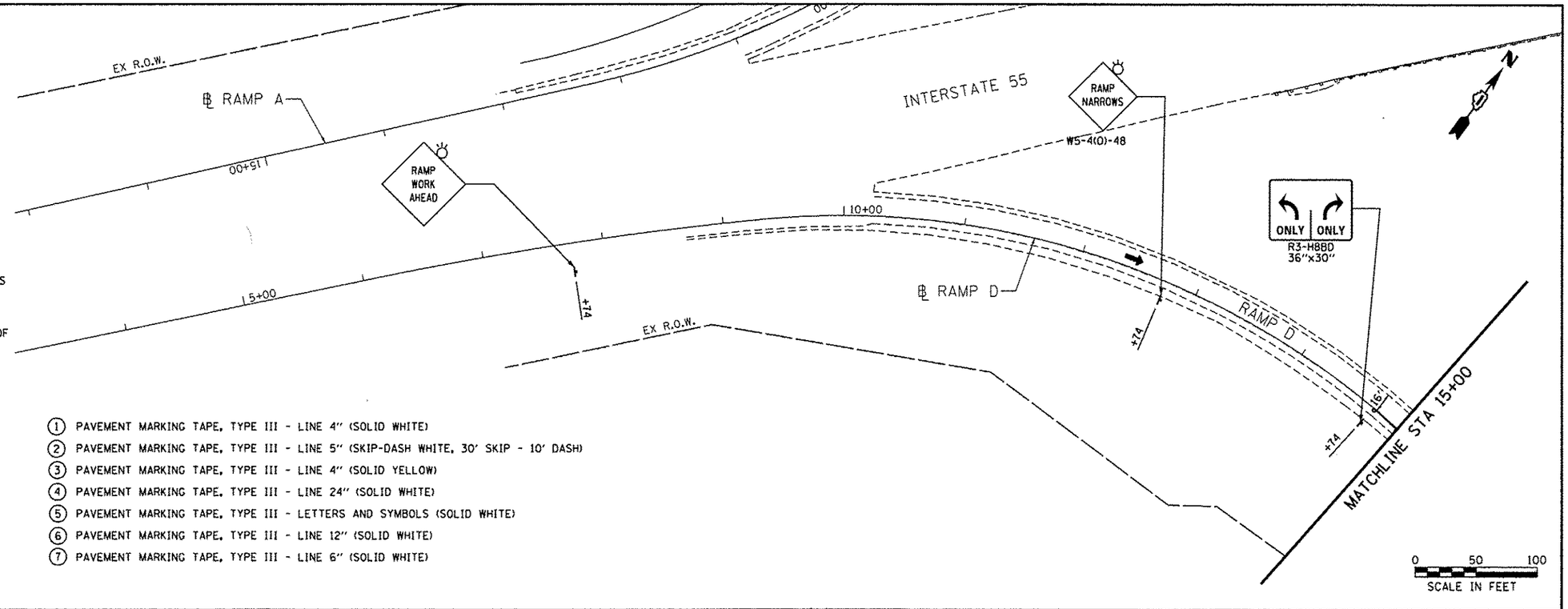

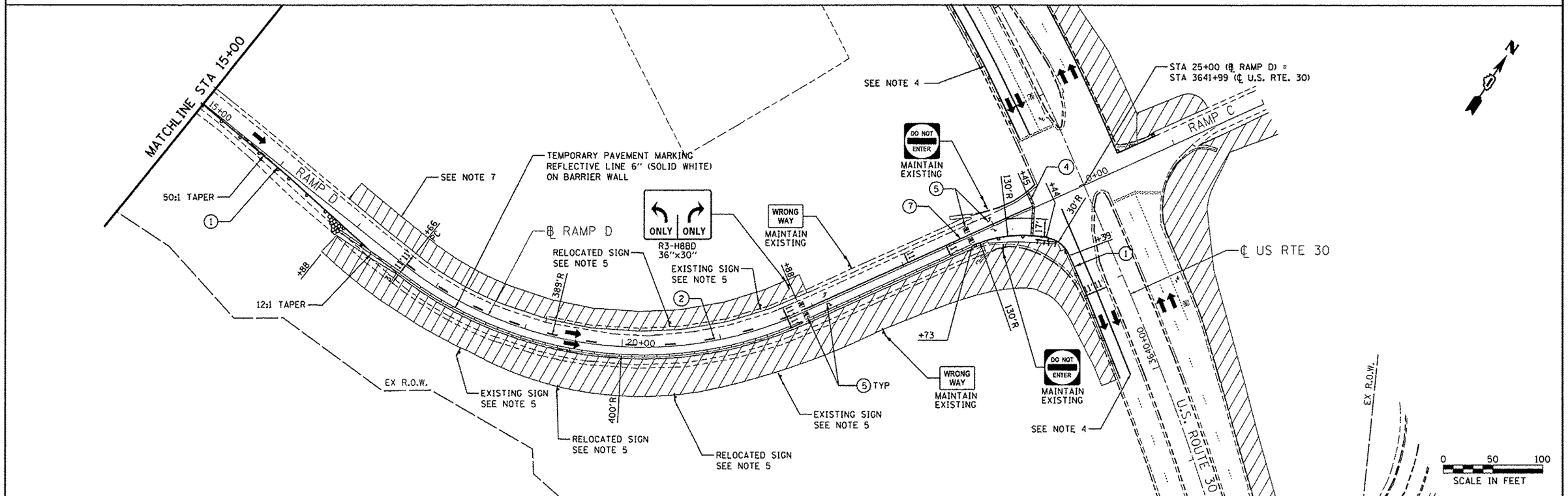

SINGH + ASSOCIATES, INC. CONSULTING ENGINEERS	USER NAME = _USER_	DESIGNED - AS/OB	REVISED -	STATE OF ILLINOIS DEPARTMENT OF TRANSPORTATION	SUGGESTED STAGES OF CONSTRUCTION AND TRAFFIC CONTROL RAMP D – STAGE 1	F.A.P. RTE.	SECTION	COUNTY	TOTAL SHEETS / SHEET NO.
	FILE NAME = D160W13-sht-staging7.dgn	DRAWN - AS/OB	REVISED -			575	14-N	WILL	163 / 39
	PLOT SCALE = 50.0000 ' / in.	CHECKED - IY	REVISED -					CONTRACT NO. 60W13	
	PLOT DATE = 12/17/2013	DATE - 12/17/2013	REVISED -		SCALE: 1" = 50' SHEET 2 OF 5 SHEETS STA. 5+00 TO STA. 25+00			ILLINOIS FED. AID PROJECT	

NOTES

1. PRIOR TO INSTALLING POST MOUNTED SIGNS, THE CONTRACTOR SHALL CONTACT J.U.L.I.E.
2. PORTABLE CHANGEABLE MESSAGE TO BE USED AT LOCATIONS AS DETERMINED BT THE ENGINEER.
3. ALL PAVEMENT MARKING USED FOR SUGGESTED STAGES OF CONSTRUCTION ARE TEMPORARY AND PER STANDARD SPECIFICATIONS FOR ROAD AND BRIDGE CONSTRUCTION, SECTION 703.
4. CONTRACTOR CANNOT EXCEED DROP OFFS OF 24 INCHES IN SELECT WORK ZONES FOR MORE THAN 48 HOURS.
5. SEE ROADWAY LIGHTING PLAN SHEETS FOR LIGHTING REMOVAL, TEMPORARY LIGHTING, AND INSTALLATIONS OF LIGHTING.

LEGEND

- WORK ZONE
- DIRECTION OF TRAFFIC
- TEMPORARY PLASTIC DRUMS WITH STEADY BURN MONO-DIRECTIONAL LIGHTS
- IMPACT ATTENUATOR, NON REDIRECTION TL3
- TRAFFIC SIGN
- TEMP. CONC. BARRIER W/ WALL MARKERS TYPE C @ 25 FT CTRS.
- TYPE III BARRICADE WITH FLASHING MONODIRECTIONAL LIGHTS

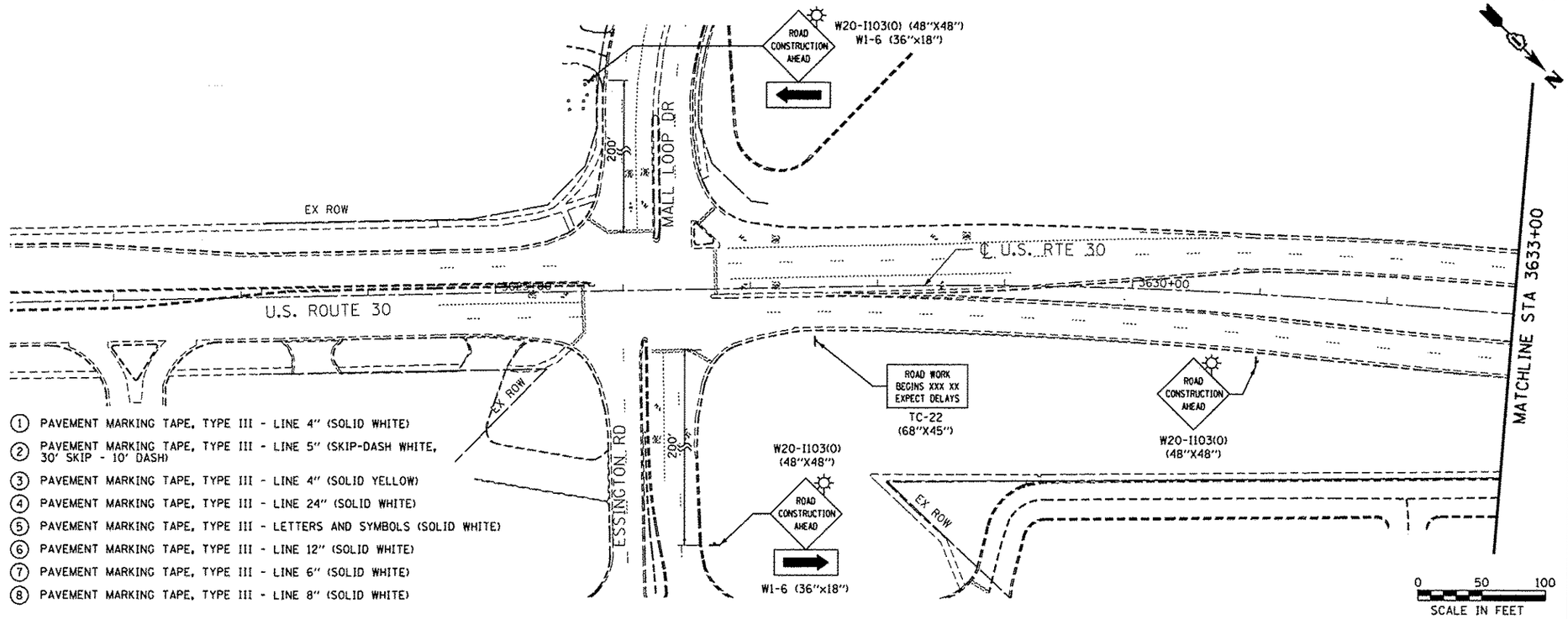

1. PAVEMENT MARKING TAPE, TYPE III - LINE 4" (SOLID WHITE)
2. PAVEMENT MARKING TAPE, TYPE III - LINE 5" (SKIP-DASH WHITE, 30' SKIP - 10' DASH)
3. PAVEMENT MARKING TAPE, TYPE III - LINE 4" (SOLID YELLOW)
4. PAVEMENT MARKING TAPE, TYPE III - LINE 24" (SOLID WHITE)
5. PAVEMENT MARKING TAPE, TYPE III - LETTERS AND SYMBOLS (SOLID WHITE)
6. PAVEMENT MARKING TAPE, TYPE III - LINE 12" (SOLID WHITE)
7. PAVEMENT MARKING TAPE, TYPE III - LINE 6" (SOLID WHITE)
8. PAVEMENT MARKING TAPE, TYPE III - LINE 8" (SOLID WHITE)

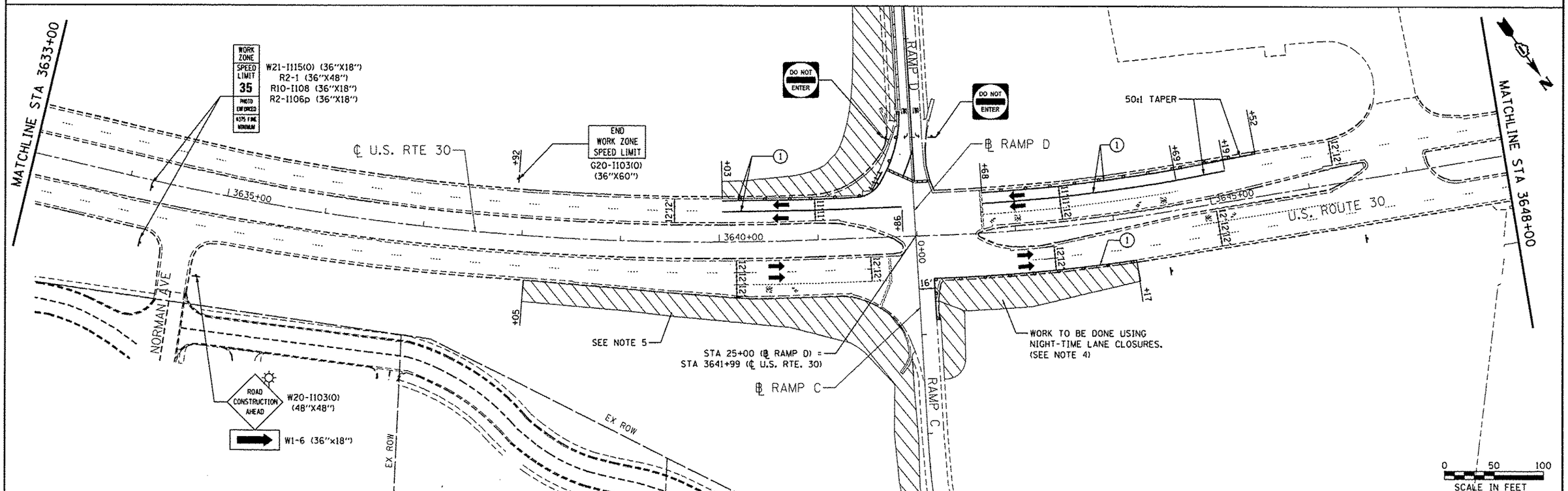

SINGH + ASSOCIATES, INC. CONSULTING ENGINEERS	USER NAME = _USER_	DESIGNED - AS/OB	REVISED -
	FILE NAME = D160W13-sht-staging8.dgn	DRAWN - AS/OB	REVISED -
	PLOT SCALE = 50.0000 ' / in.	CHECKED - IY	REVISED -
	PLOT DATE = 12/17/2013	DATE - 12/17/2013	REVISED -

STATE OF ILLINOIS
DEPARTMENT OF TRANSPORTATION

SUGGESTED STAGES OF CONSTRUCTION AND TRAFFIC CONTROL
US 30 – STAGE 1 AND 2

SCALE: 1" = 50' | SHEET 3 OF 5 SHEETS | STA. 3618+00 TO STA. 3648+00

F.A.P. RTE.	SECTION	COUNTY	TOTAL SHEETS	SHEET NO.
575	14-N	WILL	163	40

CONTRACT NO. 60W13

ILLINOIS FED. AID PROJECT

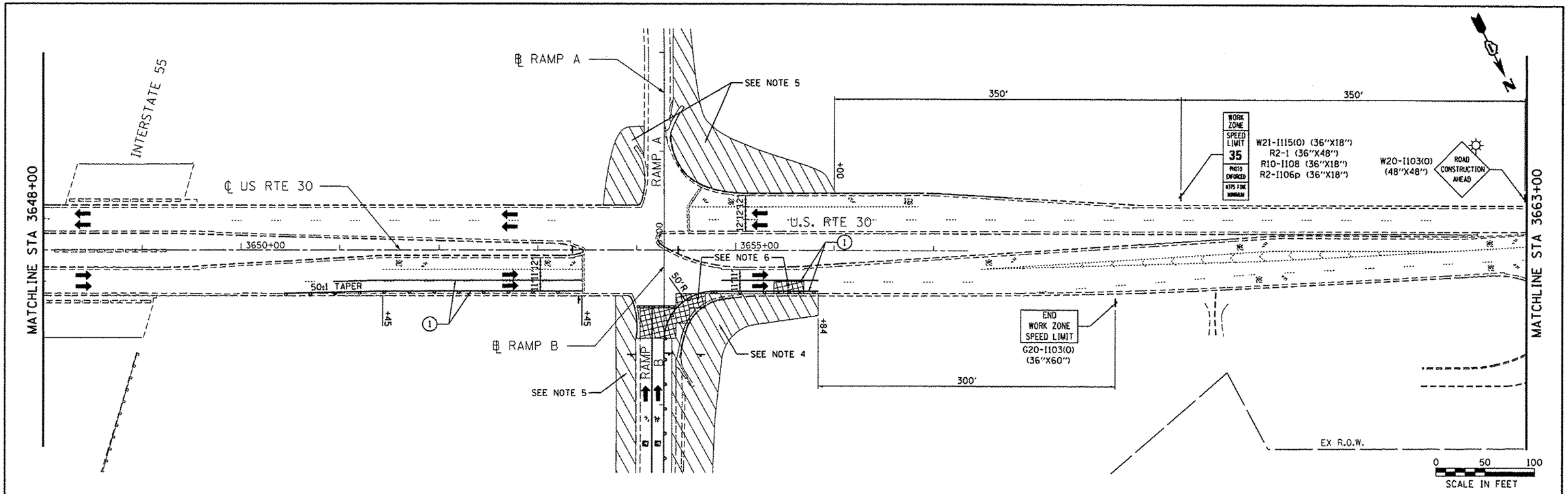

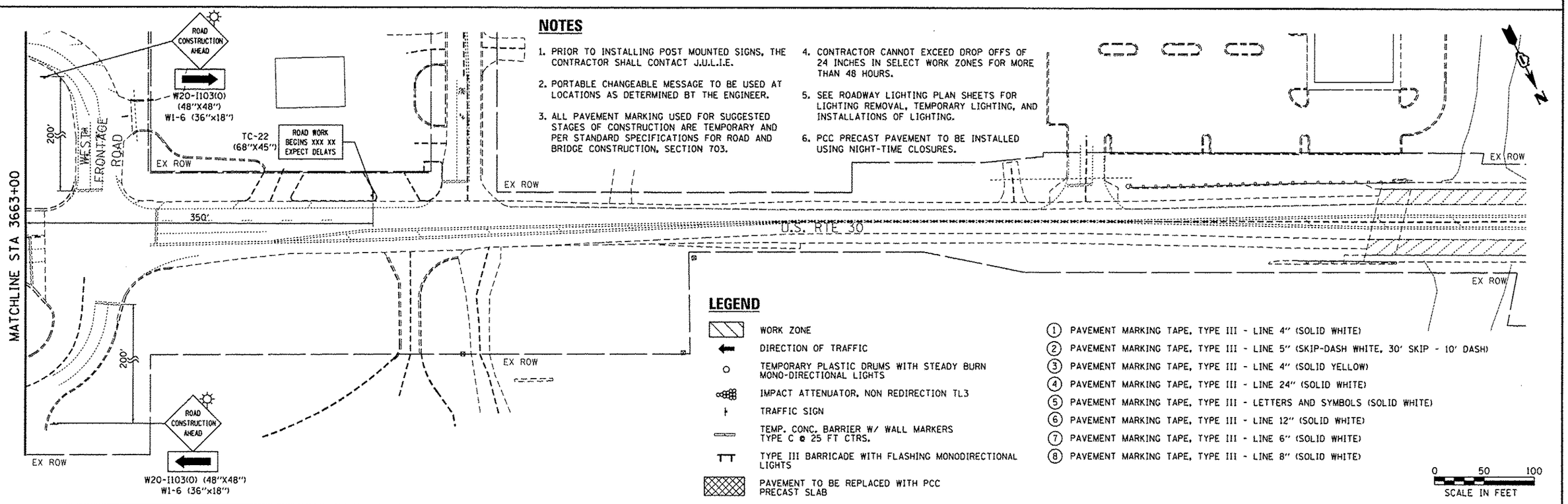

NOTES

1. PRIOR TO INSTALLING POST MOUNTED SIGNS, THE CONTRACTOR SHALL CONTACT J.U.L.I.E.
2. PORTABLE CHANGEABLE MESSAGE TO BE USED AT LOCATIONS AS DETERMINED BT THE ENGINEER.
3. ALL PAVEMENT MARKING USED FOR SUGGESTED STAGES OF CONSTRUCTION ARE TEMPORARY AND PER STANDARD SPECIFICATIONS FOR ROAD AND BRIDGE CONSTRUCTION, SECTION 703.
4. CONTRACTOR CANNOT EXCEED DROP OFFS OF 24 INCHES IN SELECT WORK ZONES FOR MORE THAN 48 HOURS.
5. SEE ROADWAY LIGHTING PLAN SHEETS FOR LIGHTING REMOVAL, TEMPORARY LIGHTING, AND INSTALLATIONS OF LIGHTING.
6. PCC PRECAST PAVEMENT TO BE INSTALLED USING NIGHT-TIME CLOSURES.

LEGEND

- WORK ZONE
- DIRECTION OF TRAFFIC
- TEMPORARY PLASTIC DRUMS WITH STEADY BURN MONO-DIRECTIONAL LIGHTS
- IMPACT ATTENUATOR, NON REDIRECTION TL3
- TRAFFIC SIGN
- TEMP. CONC. BARRIER W/ WALL MARKERS TYPE C @ 25 FT CTRS.
- TYPE III BARRICADE WITH FLASHING MONODIRECTIONAL LIGHTS
- PAVEMENT TO BE REPLACED WITH PCC PRECAST SLAB

1. PAVEMENT MARKING TAPE, TYPE III - LINE 4" (SOLID WHITE)
2. PAVEMENT MARKING TAPE, TYPE III - LINE 5" (SKIP-DASH WHITE, 30' SKIP - 10' DASH)
3. PAVEMENT MARKING TAPE, TYPE III - LINE 4" (SOLID YELLOW)
4. PAVEMENT MARKING TAPE, TYPE III - LINE 24" (SOLID WHITE)
5. PAVEMENT MARKING TAPE, TYPE III - LETTERS AND SYMBOLS (SOLID WHITE)
6. PAVEMENT MARKING TAPE, TYPE III - LINE 12" (SOLID WHITE)
7. PAVEMENT MARKING TAPE, TYPE III - LINE 6" (SOLID WHITE)
8. PAVEMENT MARKING TAPE, TYPE III - LINE 8" (SOLID WHITE)

SINGH + ASSOCIATES, INC. CONSULTING ENGINEERS

USER NAME = .USER.	DESIGNED - AS/OB	REVISED -	
FILE NAME = 0160W13-sht-staging9.dgn	DRAWN - AS/OB	REVISED -	
PLOT SCALE = 50.0000 ' / in.	CHECKED - TY	REVISED -	
PLOT DATE = 12/17/2013	DATE - 12/17/2013	REVISED -	

STATE OF ILLINOIS
DEPARTMENT OF TRANSPORTATION

SUGGESTED STAGES OF CONSTRUCTION AND TRAFFIC CONTROL
U.S. ROUTE 30 – STAGES 1 & 2

SCALE: 1" = 50' | SHEET 4 OF 5 SHEETS | STA. 3648+00 TO STA. 3678+00

F.A.P. RTE.	SECTION	COUNTY	TOTAL SHEETS	SHEET NO.
575	14-N	WILL	163	41

CONTRACT NO. 60W13

ILLINOIS FED. AID PROJECT

NOTES

1. PRIOR TO INSTALLING POST MOUNTED SIGNS, THE CONTRACTOR SHALL CONTACT J.U.L.I.E.
2. PORTABLE CHANGEABLE MESSAGE TO BE USED AT LOCATIONS AS DETERMINED BY THE ENGINEER.
3. ALL PAVEMENT MARKING USED FOR SUGGESTED STAGES OF CONSTRUCTION ARE TEMPORARY AND PER STANDARD SPECIFICATIONS FOR ROAD AND BRIDGE CONSTRUCTION, SECTION 703.
4. PCC PRECAST SLABS TO BE INSTALLED USING NIGHT TIME LANE CLOSURES.
5. SEE SIGNING PLAN SHEETS FOR SIGN REMOVAL/RELOCATION.
6. CONTRACTOR CANNOT EXCEED DROP OFFS OF 24 INCHES IN SELECT WORK ZONES FOR MORE THAN 48 HOURS.

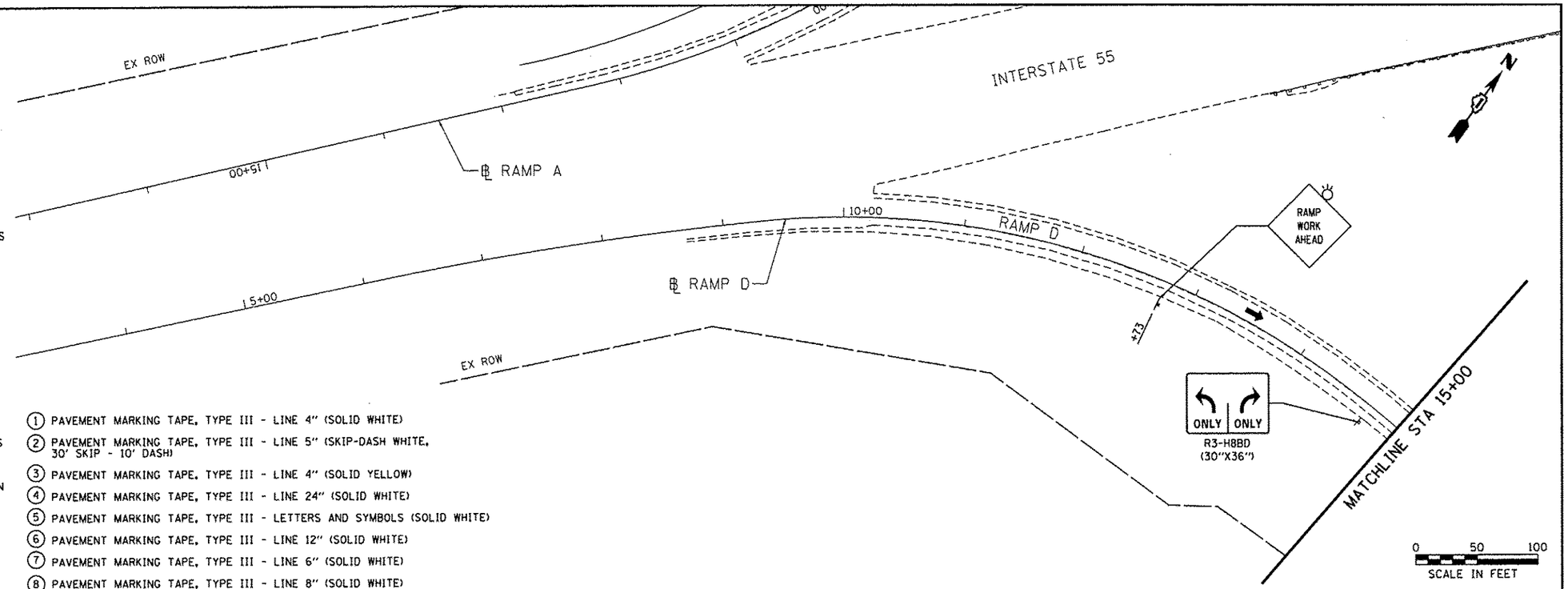

LEGEND

- WORK ZONE
- PAVEMENT REPLACED WITH PCC PRECAST SLABS
- DIRECTION OF TRAFFIC
- TEMPORARY PLASTIC DRUMS WITH STEADY BURN MONO-DIRECTIONAL LIGHTS
- TRAFFIC SIGN
- TEMP. CONC. BARRIER W/ WALL MARKERS TYPE C @ 25 FT CTRS.

(1) PAVEMENT MARKING TAPE, TYPE III - LINE 4" (SOLID WHITE)
(2) PAVEMENT MARKING TAPE, TYPE III - LINE 5" (SKIP-DASH WHITE, 30' SKIP - 10' DASH)
(3) PAVEMENT MARKING TAPE, TYPE III - LINE 4" (SOLID YELLOW)
(4) PAVEMENT MARKING TAPE, TYPE III - LINE 24" (SOLID WHITE)
(5) PAVEMENT MARKING TAPE, TYPE III - LETTERS AND SYMBOLS (SOLID WHITE)
(6) PAVEMENT MARKING TAPE, TYPE III - LINE 12" (SOLID WHITE)
(7) PAVEMENT MARKING TAPE, TYPE III - LINE 6" (SOLID WHITE)
(8) PAVEMENT MARKING TAPE, TYPE III - LINE 8" (SOLID WHITE)

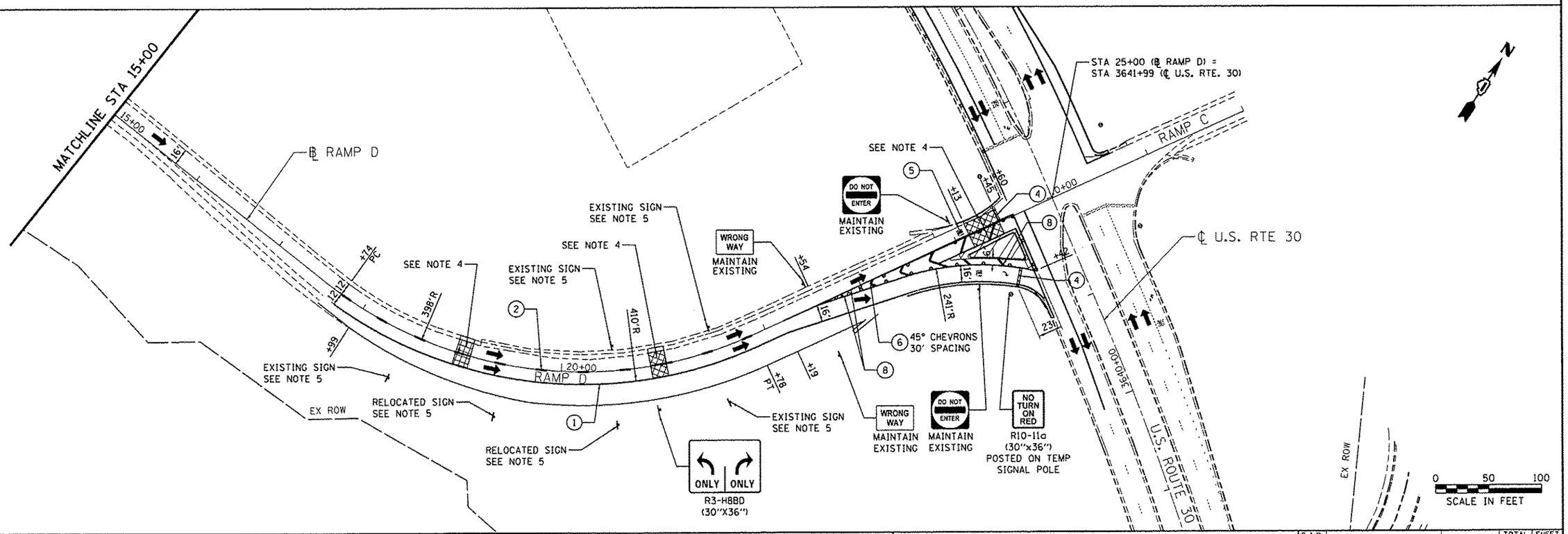

SINGH + ASSOCIATES, INC. CONSULTING ENGINEERS	USER NAME = .USER.	DESIGNED - AS/OB	REVISED -
	FILE NAME = D160W13-sht-staging10.dgn	DRAWN - AS/OB	REVISED -
	PLOT SCALE = 50.0000 ' / in.	CHECKED - IY	REVISED -
	PLOT DATE = 12/17/2013	DATE - 12/17/2013	REVISED -

STATE OF ILLINOIS
DEPARTMENT OF TRANSPORTATION

SUGGESTED STAGES OF CONSTRUCTION AND TRAFFIC CONTROL
RAMP D – STAGE 2

SCALE: 1" = 50' | SHEET 5 OF 5 SHEETS | STA. 5+00 TO STA. 25+00

F.A.P. RTE.	SECTION	COUNTY	TOTAL SHEETS	SHEET NO.
575	14-N	WILL	163	42

CONTRACT NO. 60W13

ILLINOIS FED. AID PROJECT

EROSION CONTROL GENERAL NOTES

1. SILT FENCE SHALL BE USED AS A PERIMETER EROSION BARRIER TO FILTER RUNOFF LEAVING THE PROJECT LIMITS. J-HOOKS SHALL BE INSTALLED AS SHOWN IN HIGHWAY STANDARD 280001 AT LOCATIONS APPROVED BY THE RESIDENT ENGINEER.
2. PROPOSED CULVERTS RECEIVING RUNOFF SHALL BE PROTECTED WITH INLET AND PIPE PROTECTION IMMEDIATELY AFTER CONSTRUCTION.
3. INLET FILTERS SHALL BE USED ONLY IN PAVED AREAS.
4. FOR INLET AND PIPE PROTECTION, USE A COMBINATION OF TEMPORARY SEED, EROSION CONTROL BLANKET, AND TEMPORARY DITCH CHECKS FOR PIPE PROTECTION. THE USE OF STRAW BALES FOR PIPE PROTECTION SHALL NOT BE ALLOWED.
5. EROSION CONTROL MEASURES SHALL BE INSPECTED WITHIN 24 HOURS OF ANY STORM EXCEEDING 1/2" OF PRECIPITATION.
6. STABILIZED CONSTRUCTION ENTRANCES WILL BE REQUIRED. ALL LOCATIONS SHALL BE APPROVED BY THE RESIDENT ENGINEER, AND PAYMENT SHALL BE CONSIDERED INCIDENTAL TO THE COST OF THE CONTRACT.
7. EROSION CONTROL ITEMS ARE CONSIDERED TO BE HIGH PRIORITY ITEMS ON THIS CONTRACT. THE ENGINEER WILL IMPLEMENT ALL PROVISIONS OF THE SPECIFICATION NECESSARY TO ASSURE THAT EROSION CONTROL ITEMS ARE CONSTRUCTED AND MAINTAINED IN A TIMELY WAY. ALL EROSION CONTROL MEASURES SHALL BE INSTALLED PRIOR TO BEGINNING ANY CONSTRUCTION ACTIVITIES WHICH WILL POTENTIALLY CREATE ERODABLE CONDITIONS.
8. THE EROSION CONTROL MEASURES SHOWN ARE A GRAPHICAL REPRESENTATION OF SUGGESTED MEASURES. DEVIATIONS FROM THIS PLAN ARE TO BE EXPECTED PENDING A JOBSITE INSPECTION BETWEEN THE CONTRACTOR AND ENGINEER.
9. EROSION CONTROL BLANKET SHALL BE PLACED IN ACCORDANCE WITH THE REQUIREMENTS OF THE STANDARD SPECIFICATIONS AFTER TEMPORARY SEEDING HAS BEEN COMPLETED ON AREAS WITH SLOPES 1:3 OR STEEPER THAT ARE TEMPORARILY SEEDED ON OR AFTER SEPTEMBER 16, OR AS DETERMINED BY THE ENGINEER.

DENOTES WORK INCLUDED IN THE COST OF OTHER ITEMS

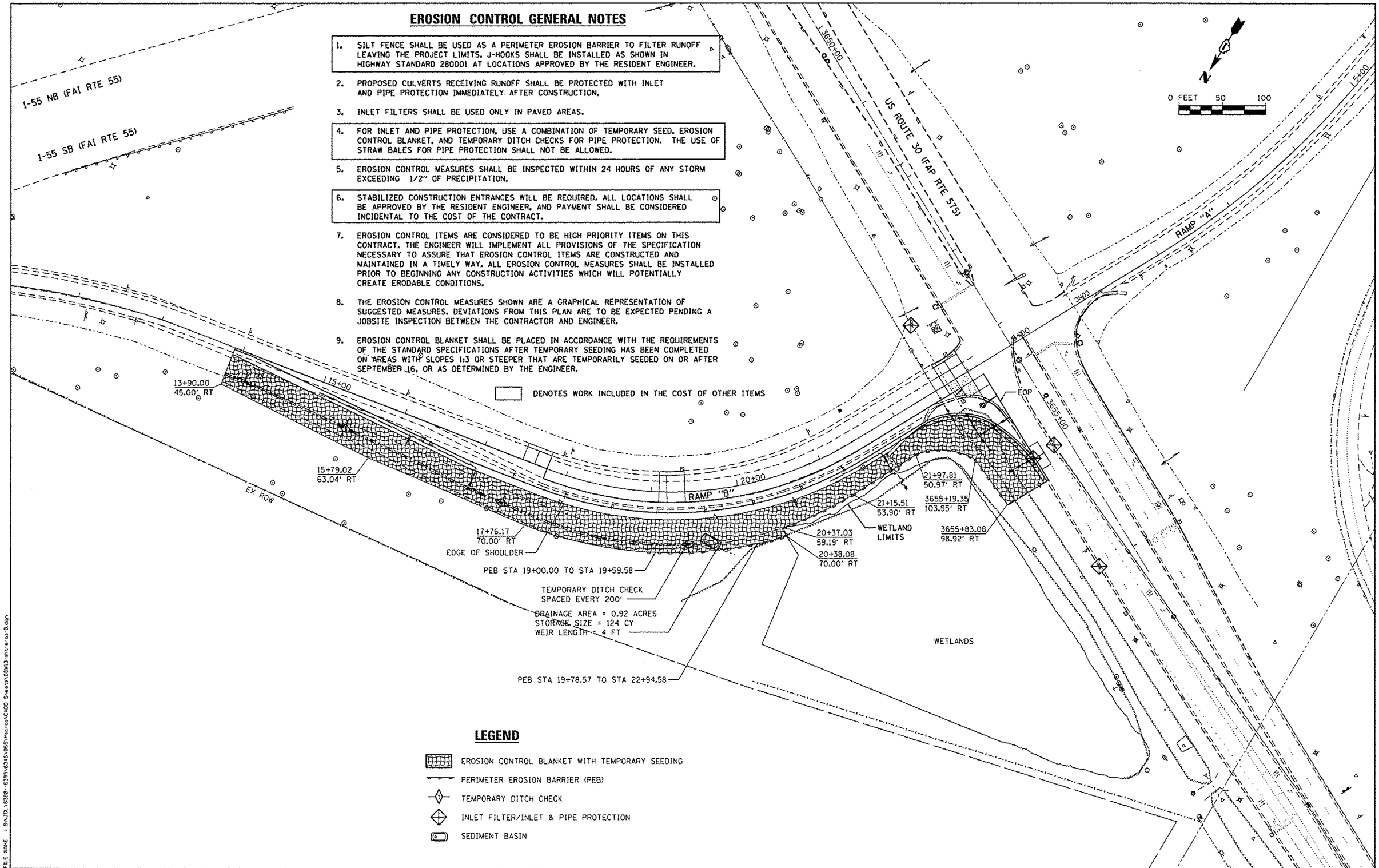

LEGEND

- EROSION CONTROL BLANKET WITH TEMPORARY SEEDING
- PERIMETER EROSION BARRIER (PEB)
- TEMPORARY DITCH CHECK
- INLET FILTER/INLET & PIPE PROTECTION
- SEDIMENT BASIN

FILE NAME = S:\JOB\16328-6399\6346\855\Micro\CADD Sheets\60W13-sht-eros-B.dgn

STRAND ASSOCIATES 1170 SOUTH HOUBOLT ROAD JOLIET, ILLINOIS 60431 (815) 744-4200	USER NAME = dennisw	DESIGNED - JLB	REVISED -	STATE OF ILLINOIS DEPARTMENT OF TRANSPORTATION	TEMPORARY EROSION CONTROL PLAN RAMP "B"
	MODEL NAME = Defaults	DRAWN - DJW	REVISED -		
	PLOT SCALE = 100.0000 ' / in.	CHECKED - BMA	REVISED -		
	PLOT DATE = 12/18/2013	DATE - 12/17/13	REVISED -		SCALE: 1" = 50' SHEET 1 OF 2 SHEETS STA. TO STA.

F.A.P. RTE.	SECTION	COUNTY	TOTAL SHEETS	SHEET NO.
575	14-N	WILL	163	43
		CONTRACT NO. 60W13		
		ILLINOIS FED. AID PROJECT		

I-55 NB (FAI RTE 55)

N

0 FEET 50 100

LEGEND

- EROSION CONTROL BLANKET WITH TEMPORARY SEEDING
- PERIMETER EROSION BARRIER (PEB)
- TEMPORARY DITCH CHECK
- INLET FILTER/INLET & PIPE PROTECTION
- SEDIMENT BASIN

PARK & RIDE

US ROUTE 30 (FAP RTE 575)

US 30

3643+00

WETLAND LIMITS

WETLAND LIMITS

15+00

DRAINAGE AREA = 0.76 ACRES
STORAGE SIZE = 102 CY
WEIR LENGTH = 4 FT

TEMPORARY DITCH CHECKS SPACED EVERY 300'

17+62.76
70.00' RT

PEB STA 17+62.76 TO STA 20+00.00

RAMP "D"

20+00

20+00.00
70.00' RT

20+42.21
68.00' RT

21+87.57
68.00' RT

22+50.00
68.00' RT

23+77.83
68.00' RT

24+08.29
81.35' RT

3640+91.20
59.08' LT

3640+85.81
59.00' LT

PEB STA 22+50.00 TO STA 3640+85.81

EX ROW (TYP)

3644+18.72
80.00' RT

GRADING LIMITS

3642+20.00
80.00' RT

0+00

EOP

RAMP "C"

15+00

3640+00

FILE NAME = S:\JOB\16388-6399\E346\055\Micros\17400 Sheets\60W13-sht-eros-D.dgn

STRAND ASSOCIATES® 1170 SOUTH HOUBOLT ROAD JOLIET, ILLINOIS 60431 (815) 744-4200	USER NAME = dennisw	DESIGNED - JLB	REVISED -	STATE OF ILLINOIS DEPARTMENT OF TRANSPORTATION	TEMPORARY EROSION CONTROL PLAN RAMP "D"
	MODEL NAME = Default	DRAWN - DJW	REVISED -		
	PLOT SCALE = 100.0000 ' / in.	CHECKED - BMA	REVISED -		
	PLOT DATE = 12/18/2013	DATE - 12/17/13	REVISED -		SCALE: 1" = 50' SHEET 2 OF 2 SHEETS STA. TO STA.

F.A.P. RTE.	SECTION	COUNTY	TOTAL SHEETS	SHEET NO.
575	14-N	WILL	163	44
		CONTRACT NO. 60W13		
		ILLINOIS FED. AID PROJECT		

LEGEND

BOUNDARY LINES/SYMBOLS	EXISTING	PROPOSED
DITCH & SWALE BOTTOM		
ROADWAY DITCH FLOW		
PIPE CULVERT		
PIPE UNDERDRAINS		
STORM SEWER		
CATCH BASIN		
INLET		
MANHOLE		
END SECTION		
CONCRETE HEADWALL FOR PIPE DRAINS		
STRUCTURES		S-XXX
PIPES		P-XXX

PROPOSED DRAINAGE STRUCTURE SCHEDULE

STRUCTURE NO.	STRUCTURE TYPE	ROADWAY	STATION	OFFSET	RIM ELEV	INV (N)	INV (S)	INV (W)	INV (E)
S-100	MANHOLES, TYPE A, 5'-DIAMETER, TYPE 1 FRAME, CLOSED LID	Ramp B	22+72	70' RT	607.10		601.17	601.10	602.18
S-101	PRECAST REIN CONC FES 30"	Ramp B	22+73	88' RT				601.02	
S-102	MANHOLES, TYPE A, 4'-DIAMETER, TYPE 24 FRAME AND GRATE	US 30	3655+53	46' RT		604.27	604.17		
S-103	PRECAST REIN CONC FES 12"	US 30	3655+53	72' RT		601.00			

STORM SEWER PIPE SCHEDULE

PIPE NO.	FROM	TO	LENGTH (FT)	DIA (IN)	PIPE TYPE	SLOPE (%)	D.I.	U.I.
P-100	Existing	S-100	30	24	CLASS A, TYPE 2	1.00%	602.18	602.48
P-101	Existing	S-100	42	18	CLASS A, TYPE 2	0.48%	601.17	601.37
P-102	S-100	S-101	19	30	CLASS A, TYPE 2	0.42%	601.02	601.10
P-103	S-102	S-103	27	12	CLASS A, TYPE 2	1.00%	601.00	601.27

NOTE:

1. UNDERDRAIN OFFSET FOR CLARITY, SEE TYPICAL SECTIONS FOR UNDERDRAIN LOCATION.

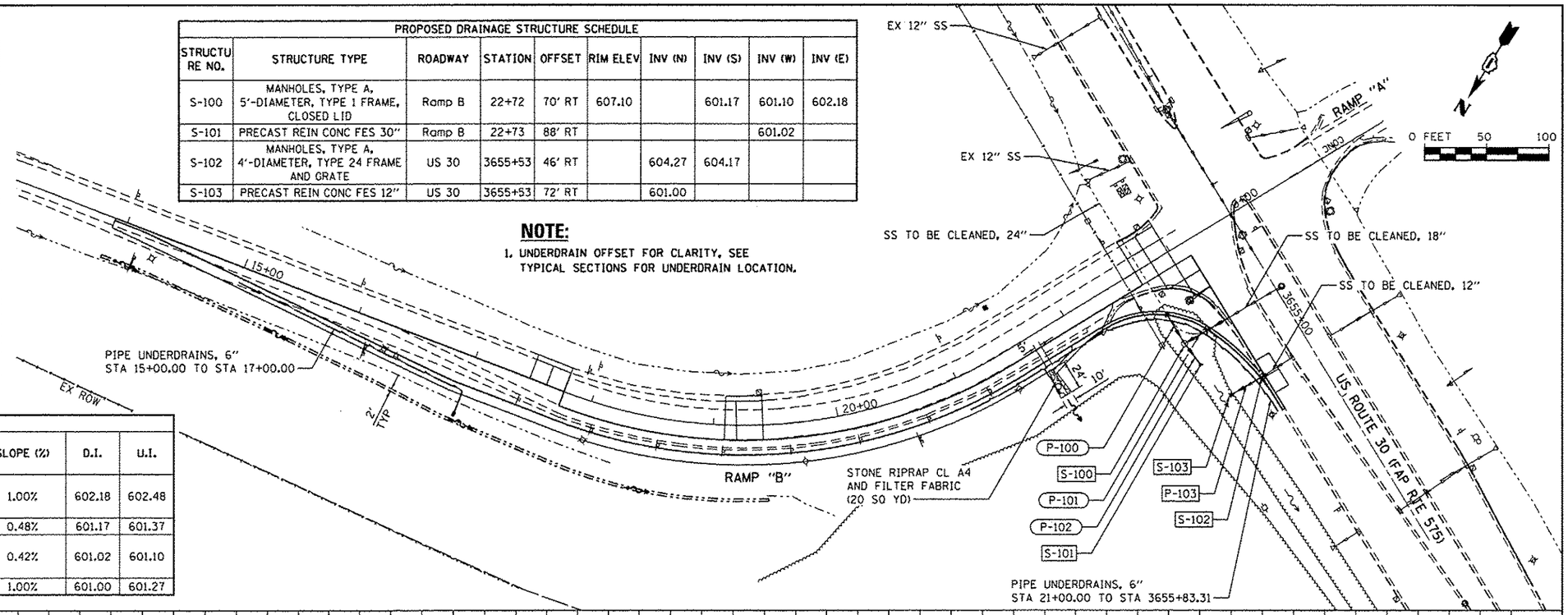

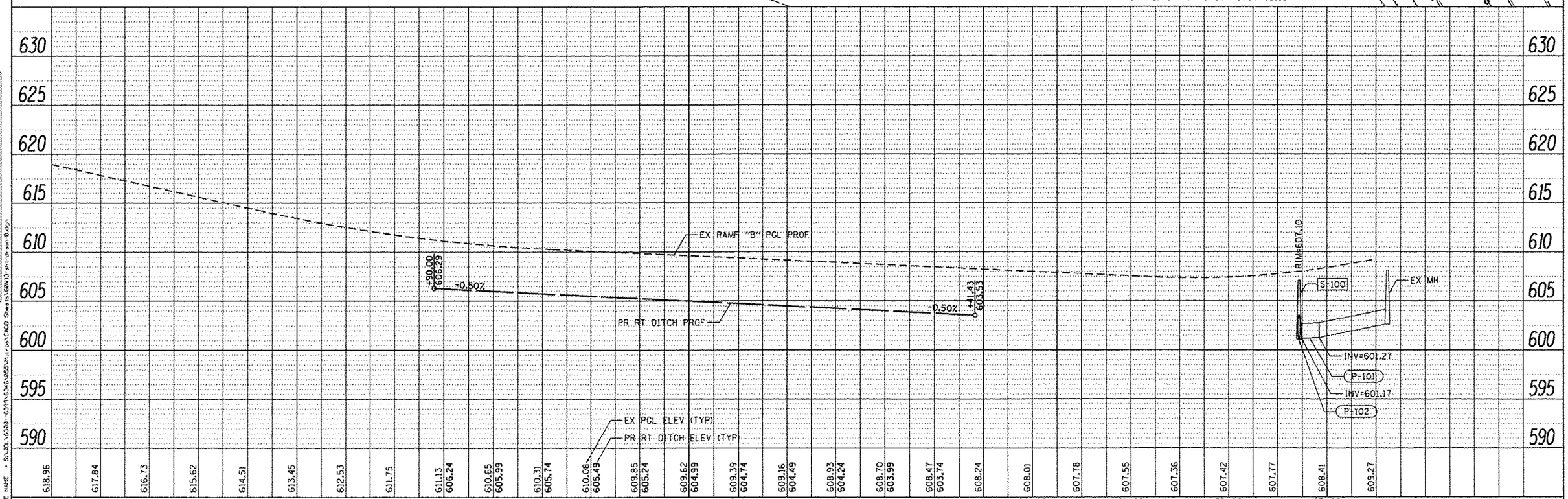

STRAND ASSOCIATES® 1170 SOUTH HOUBOLT ROAD JOLIET, ILLINOIS 60431 (815) 744-4200	USER NAME = dennisw	DESIGNED - JLB	REVISED -
	MODEL NAME = Default	DRAWN - DJW	REVISED -
	PLOT SCALE = 100.0000 ' / in.	CHECKED - BMA	REVISED -
	PLOT DATE = 12/18/2013	DATE - 12/17/13	REVISED -

STATE OF ILLINOIS
DEPARTMENT OF TRANSPORTATION

DRAINAGE PLAN AND PROFILE
RAMP "B"

SCALE: 50H-5V | SHEET 1 OF 2 SHEETS | STA. | TO STA.

F.A.P. RTE.	SECTION	COUNTY	TOTAL SHEETS	SHEET NO.
575	14-N	WILL	163	45
		CONTRACT NO. 60W13		
		ILLINOIS FED. AID PROJECT		

PLAN — SURVEYED / PLOTTED / ALIGNMENT CHECKED / RT. OF WAY CHECKED / CADD FILE NAME / NOTE BOOK NO. / BY / DATE

PROFILE — SURVEYED / PLOTTED / GRADES CHECKED / B.M. NOTED / STRUCTURE NOTATIONS CHKD / NOTE BOOK NO. / BY / DATE

FILE NAME = S:\JOL\6382--6399\6346\255\Micro\CADD Sheets\60W13-ph1-drain-Ramp

NOTE:

1. UNDERDRAIN OFFSET FOR CLARITY, SEE TYPICAL SECTIONS FOR UNDERDRAIN LOCATION.

LEGEND

BOUNDARY LINES/SYMBOLS	EXISTING	PROPOSED
DITCH & SWALE BOTTOM		
ROADWAY DITCH FLOW		
PIPE CULVERT		
PIPE UNDERDRAINS		
STORM SEWER		
CATCH BASIN		
INLET		
MANHOLE		
END SECTION		
CONCRETE HEADWALL FOR PIPE DRAINS		
STRUCTURES		S-XXX
PIPES		P-XXX

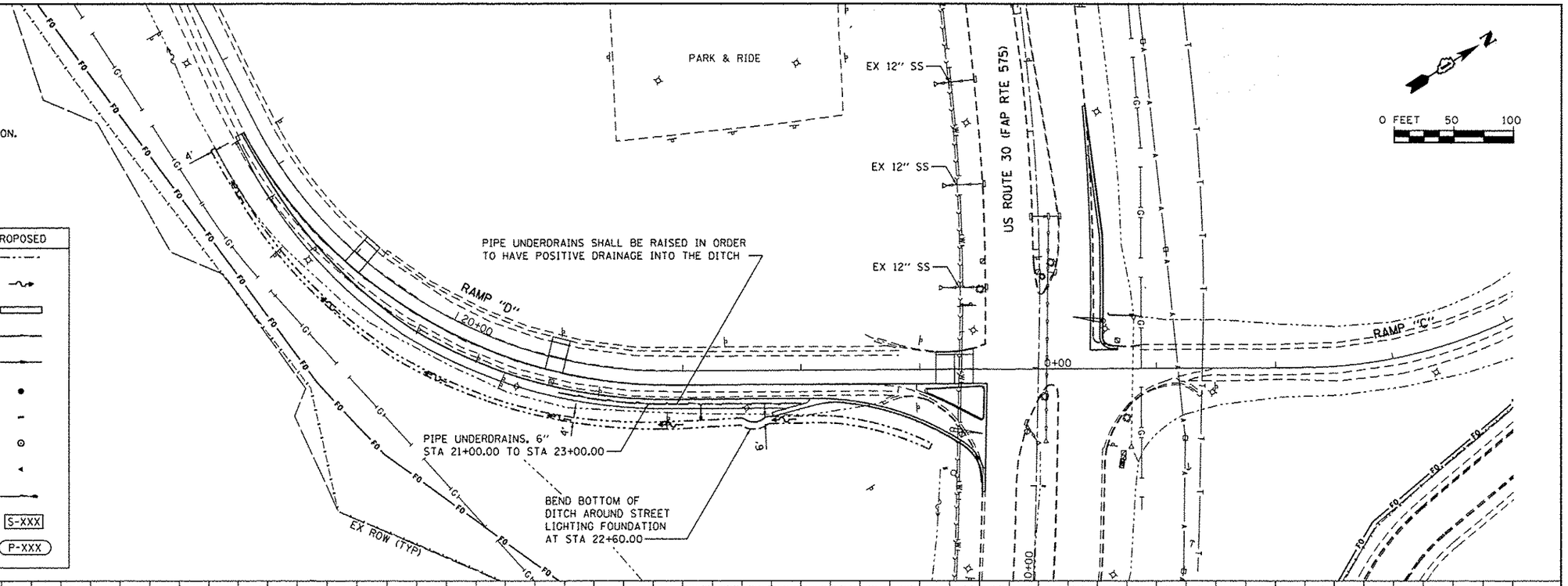

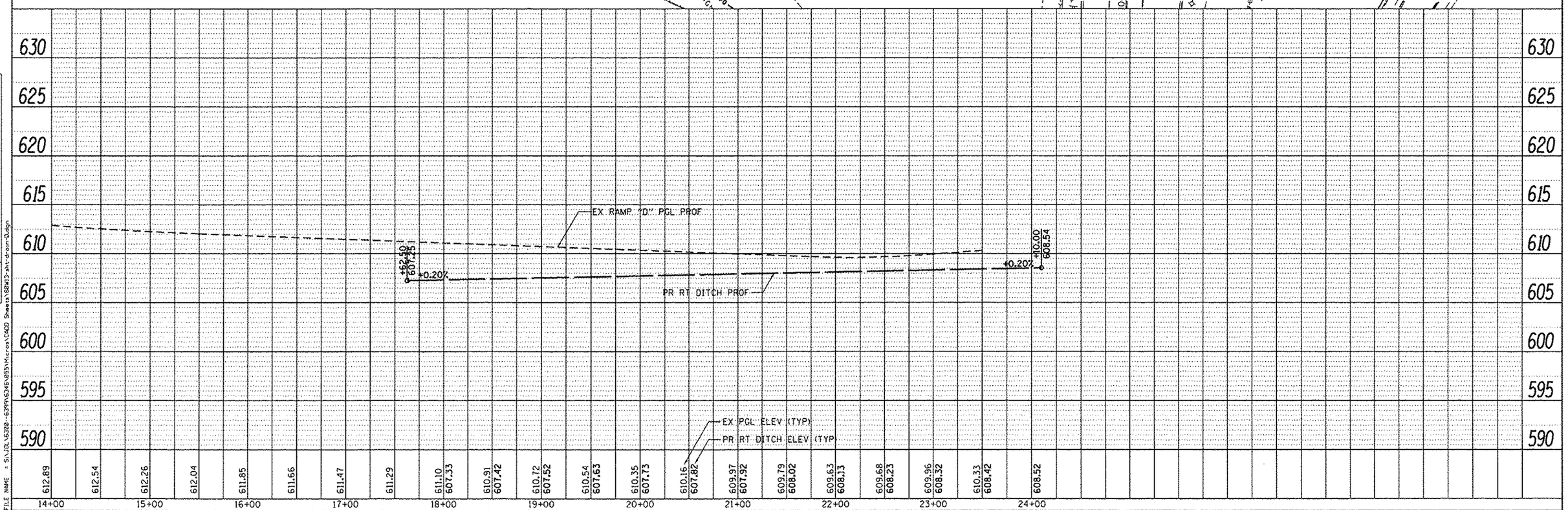

PLAN		BY	DATE
SURVEYED			
PLOTTED			
ALIGNMENT CHECKED			
RT. OF WAY CHECKED			
CADD FILE NAME			
NOTE BOOK NO.			

PROFILE		BY	DATE
SURVEYED			
PLOTTED			
GRADES CHECKED			
BRIDGE CHECKED			
STRUCTURE NOTATIONS CADD			
NOTE BOOK NO.			

FILE NAME = S:\JOL\6320-6399\6346\855\Micros\CADD Sheets\60W13-sht-drain-D.dgn

STRAND ASSOCIATES®
1170 SOUTH HOUBOLT ROAD
JOLIET, ILLINOIS 60431
(815) 744-4200

USER NAME = dennisw	DESIGNED - JLB	REVISED -	
MODEL NAME = Default	DRAWN - DJW	REVISED -	
PLOT SCALE = 100.0000 ' / in.	CHECKED - BMA	REVISED -	
PLOT DATE = 1/22/2014	DATE - 12/17/13	REVISED -	

STATE OF ILLINOIS
DEPARTMENT OF TRANSPORTATION

DRAINAGE PLAN AND PROFILE
RAMP "D"

SCALE: 50H-5V | SHEET 2 OF 2 SHEETS | STA. TO STA.

F.A.P. RTE.	SECTION	COUNTY	TOTAL SHEETS	SHEET NO.
575	14-N	WILL	163	46

CONTRACT NO. 60W13

ILLINOIS FED. AID PROJECT

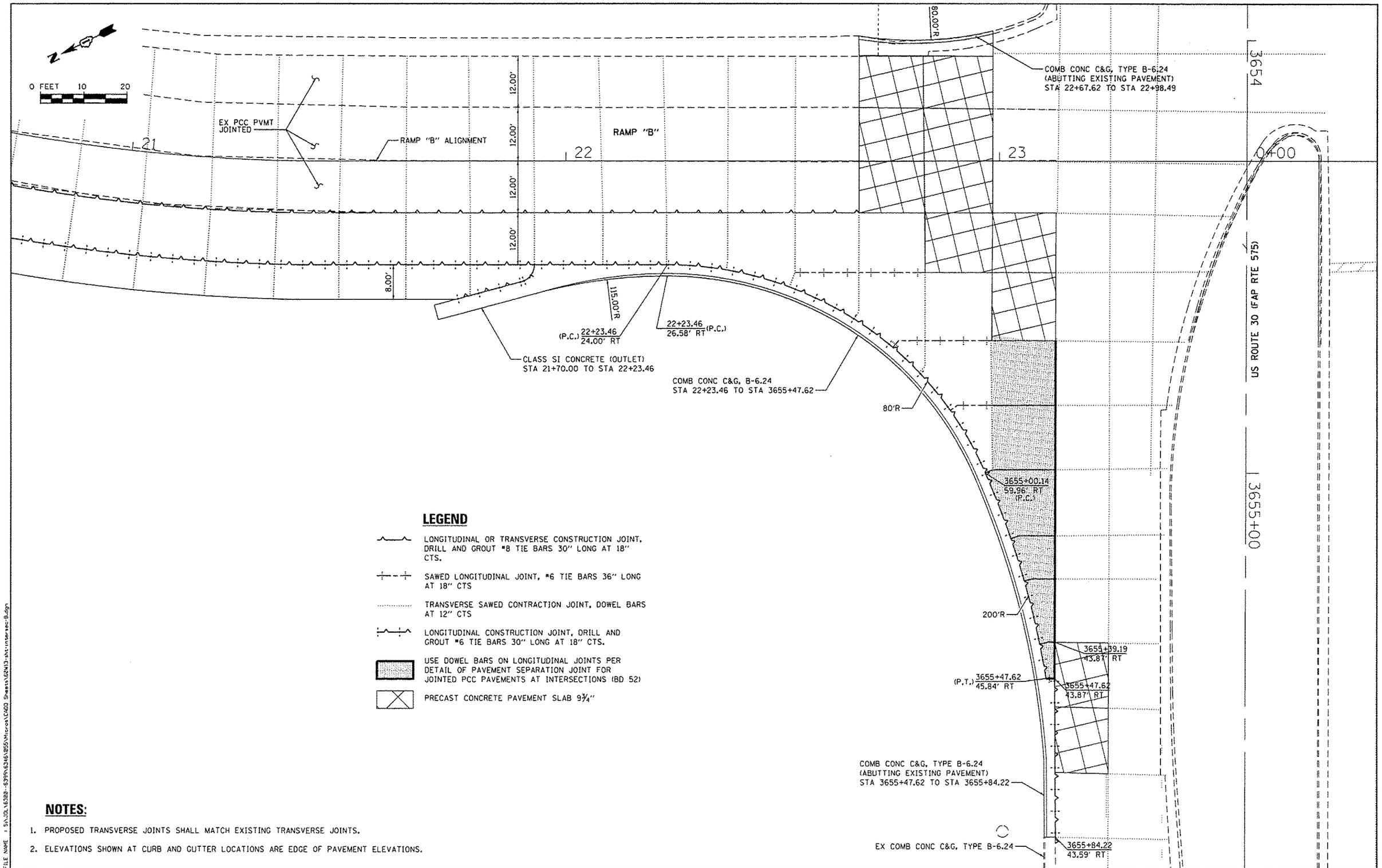

LEGEND

- LONGITUDINAL OR TRANSVERSE CONSTRUCTION JOINT, DRILL AND GROUT #8 TIE BARS 30" LONG AT 18" CTS.
- SAWED LONGITUDINAL JOINT, #6 TIE BARS 36" LONG AT 18" CTS
- TRANSVERSE SAWED CONTRACTION JOINT, DOWEL BARS AT 12" CTS
- LONGITUDINAL CONSTRUCTION JOINT, DRILL AND GROUT #6 TIE BARS 30" LONG AT 18" CTS.
- USE DOWEL BARS ON LONGITUDINAL JOINTS PER DETAIL OF PAVEMENT SEPARATION JOINT FOR JOINTED PCC PAVEMENTS AT INTERSECTIONS (BD 52)
- PRECAST CONCRETE PAVEMENT SLAB 9¾"

NOTES:

1. PROPOSED TRANSVERSE JOINTS SHALL MATCH EXISTING TRANSVERSE JOINTS.
2. ELEVATIONS SHOWN AT CURB AND GUTTER LOCATIONS ARE EDGE OF PAVEMENT ELEVATIONS.

FILE NAME = S:\JOB\16380-699\6346\855\Micros\CADD Sheets\60W13-sht-inter-sec-B.dgn

STRAND ASSOCIATES® 1170 SOUTH HOUBOLT ROAD JOLIET, ILLINOIS 60431 (815) 744-4200	USER NAME = dennisw	DESIGNED - JLB	REVISED -	STATE OF ILLINOIS DEPARTMENT OF TRANSPORTATION	INTERSECTION DETAIL RAMP "B"
	MODEL NAME = Default	DRAWN - DJW	REVISED -		
	PLOT SCALE = 20.0000 ' / in.	CHECKED - BMA	REVISED -		
	PLOT DATE = 12/18/2013	DATE - 12/17/13	REVISED -		SCALE: SHEET OF SHEETS STA. TO STA.

F.A.P. RTE.	SECTION	COUNTY	TOTAL SHEETS	SHEET NO.
575	14-N	WILL	163	47
		CONTRACT NO. 60W13		
		ILLINOIS FED. AID PROJECT		

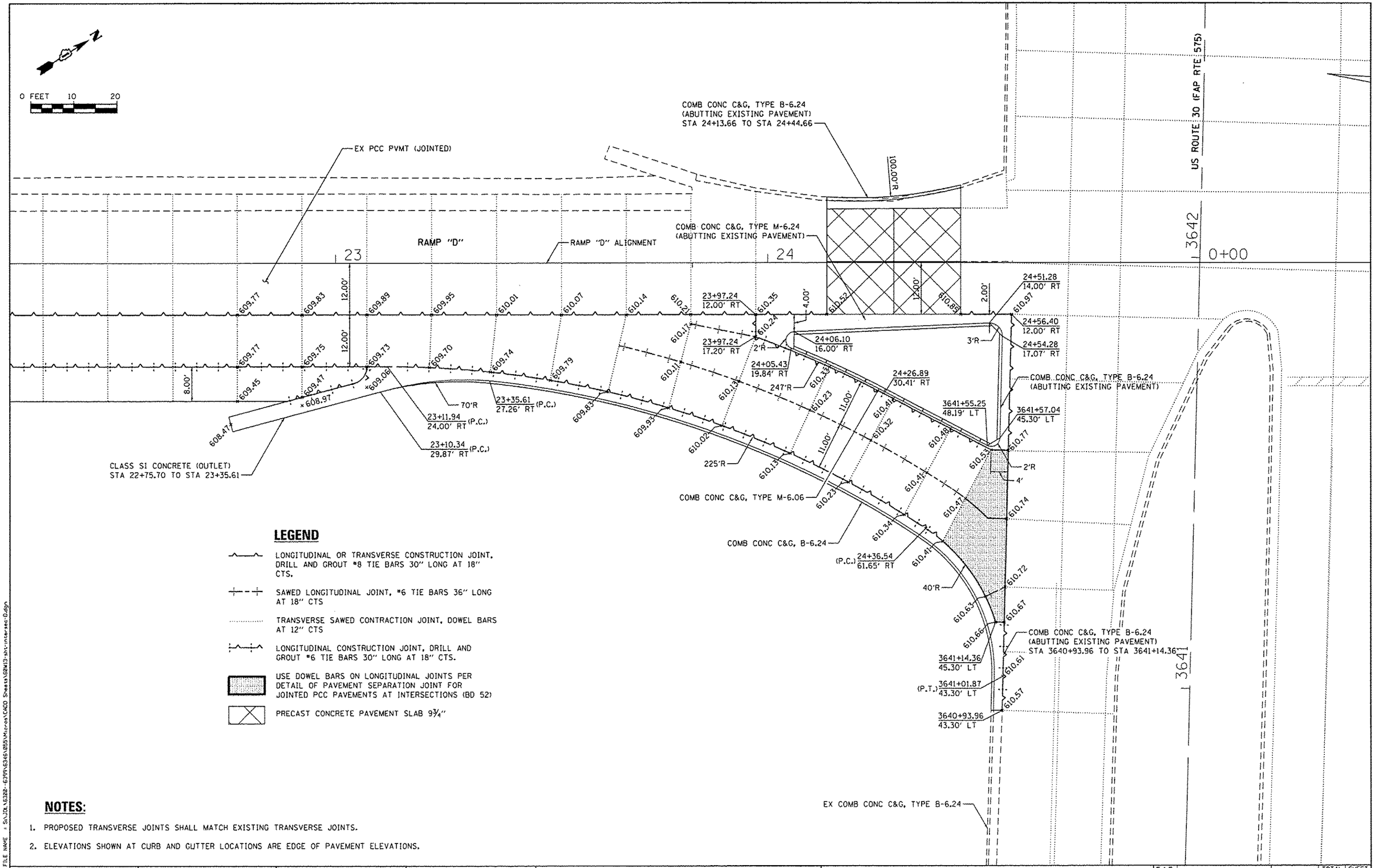

LEGEND

- LONGITUDINAL OR TRANSVERSE CONSTRUCTION JOINT. DRILL AND GROUT #8 TIE BARS 30" LONG AT 18" CTS.
- SAWED LONGITUDINAL JOINT, #6 TIE BARS 36" LONG AT 18" CTS
- TRANSVERSE SAWED CONTRACTION JOINT, DOWEL BARS AT 12" CTS
- LONGITUDINAL CONSTRUCTION JOINT, DRILL AND GROUT #6 TIE BARS 30" LONG AT 18" CTS.
- USE DOWEL BARS ON LONGITUDINAL JOINTS PER DETAIL OF PAVEMENT SEPARATION JOINT FOR JOINTED PCC PAVEMENTS AT INTERSECTIONS (BD 52)
- PRECAST CONCRETE PAVEMENT SLAB 9¾"

NOTES:

1. PROPOSED TRANSVERSE JOINTS SHALL MATCH EXISTING TRANSVERSE JOINTS.
2. ELEVATIONS SHOWN AT CURB AND GUTTER LOCATIONS ARE EDGE OF PAVEMENT ELEVATIONS.

FILE NAME = S:\JOL\6320--6399\6346\855\Microsta\CADD Sheets\60W13-sht-intersec-0.dgn

STRAND ASSOCIATES
1170 SOUTH HOUBOLT ROAD
JOLIET, ILLINOIS 60431
(815) 744-4200

USER NAME = dennisw	DESIGNED - JLB	REVISED -	
MODEL NAME = Default	DRAWN - DJW	REVISED -	
PLOT SCALE = 20.0000 ' / in.	CHECKED - BMA	REVISED -	
PLOT DATE = 12/18/2013	DATE - 12/17/13	REVISED -	

STATE OF ILLINOIS
DEPARTMENT OF TRANSPORTATION

INTERSECTION DETAIL
RAMP "D"

SCALE: | SHEET OF SHEETS | STA. TO STA.

F.A.P. RTE.	SECTION	COUNTY	TOTAL SHEETS	SHEET NO.
575	14-N	WILL	163	48

CONTRACT NO. 60W13

ILLINOIS FED. AID PROJECT

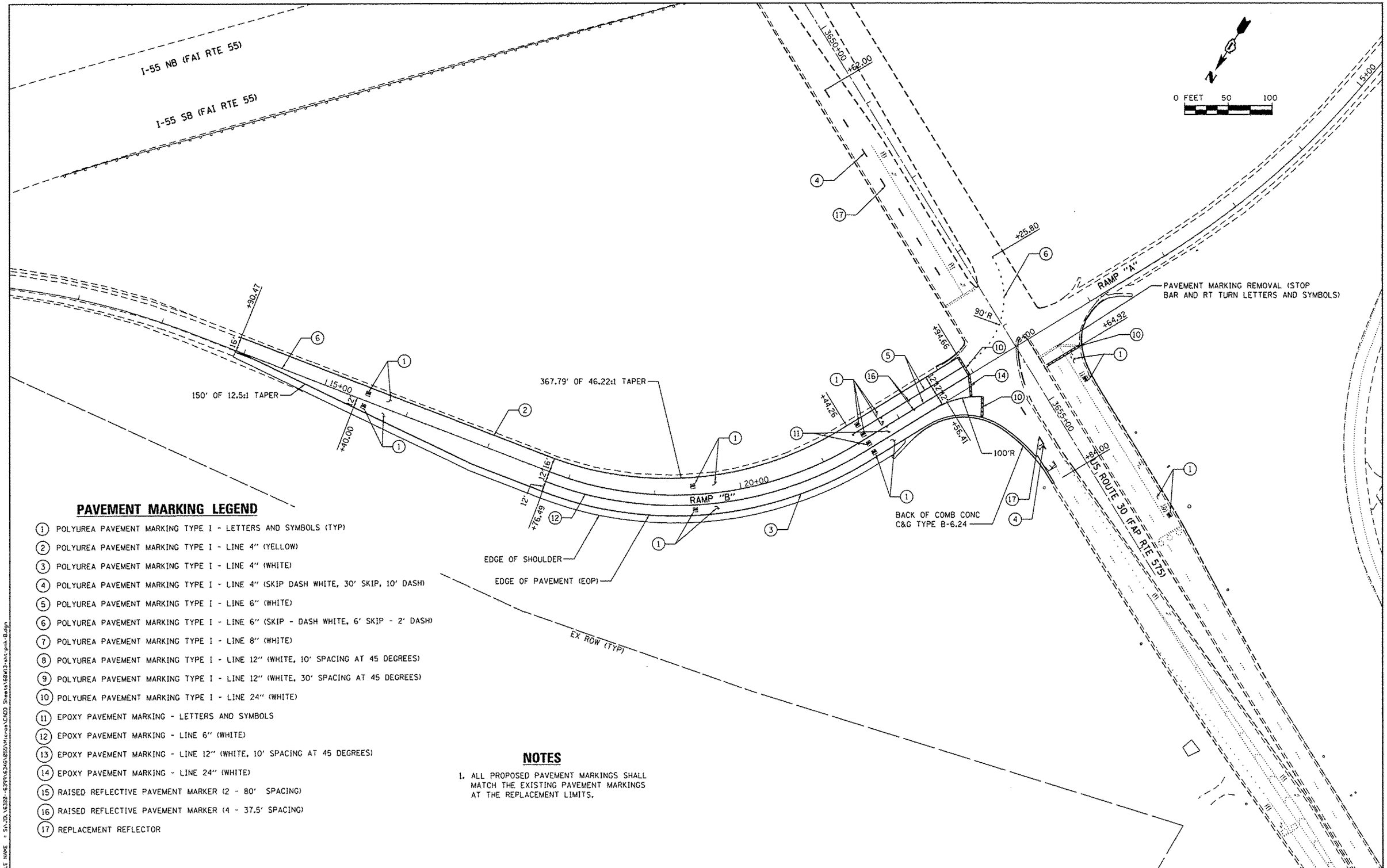

PAVEMENT MARKING LEGEND

1. POLYUREA PAVEMENT MARKING TYPE I - LETTERS AND SYMBOLS (TYP)
2. POLYUREA PAVEMENT MARKING TYPE I - LINE 4" (YELLOW)
3. POLYUREA PAVEMENT MARKING TYPE I - LINE 4" (WHITE)
4. POLYUREA PAVEMENT MARKING TYPE I - LINE 4" (SKIP DASH WHITE, 30' SKIP, 10' DASH)
5. POLYUREA PAVEMENT MARKING TYPE I - LINE 6" (WHITE)
6. POLYUREA PAVEMENT MARKING TYPE I - LINE 6" (SKIP - DASH WHITE, 6' SKIP - 2' DASH)
7. POLYUREA PAVEMENT MARKING TYPE I - LINE 8" (WHITE)
8. POLYUREA PAVEMENT MARKING TYPE I - LINE 12" (WHITE, 10' SPACING AT 45 DEGREES)
9. POLYUREA PAVEMENT MARKING TYPE I - LINE 12" (WHITE, 30' SPACING AT 45 DEGREES)
10. POLYUREA PAVEMENT MARKING TYPE I - LINE 24" (WHITE)
11. EPOXY PAVEMENT MARKING - LETTERS AND SYMBOLS
12. EPOXY PAVEMENT MARKING - LINE 6" (WHITE)
13. EPOXY PAVEMENT MARKING - LINE 12" (WHITE, 10' SPACING AT 45 DEGREES)
14. EPOXY PAVEMENT MARKING - LINE 24" (WHITE)
15. RAISED REFLECTIVE PAVEMENT MARKER (2 - 80' SPACING)
16. RAISED REFLECTIVE PAVEMENT MARKER (4 - 37.5' SPACING)
17. REPLACEMENT REFLECTOR

NOTES

1. ALL PROPOSED PAVEMENT MARKINGS SHALL MATCH THE EXISTING PAVEMENT MARKINGS AT THE REPLACEMENT LIMITS.

FILE NAME = S:\JOB\16388-6399\6346\895\Micros\CADD Sheets\60W13-sht-pmk-B.dgn

STRAND ASSOCIATES® 1170 SOUTH HOUBOLT ROAD JOLIET, ILLINOIS 60431 (815) 744-4200	USER NAME = dannisw	DESIGNED - JLB	REVISED -	STATE OF ILLINOIS DEPARTMENT OF TRANSPORTATION	PAVEMENT MARKING PLAN RAMP "B"	F.A.P. RTE.	SECTION	COUNTY	TOTAL SHEETS	SHEET NO.
	MODEL NAME = Default	DRAWN - DJW	REVISED -			575	14-N	WILL	163	49
	PLOT SCALE = 100.0000 ' / in.	CHECKED - BMA	REVISED -		SCALE: SHEET OF SHEETS STA. TO STA.			CONTRACT NO. 60W13		
	PLOT DATE = 12/18/2013	DATE - 12/17/13	REVISED -				ILLINOIS FED. AID PROJECT			

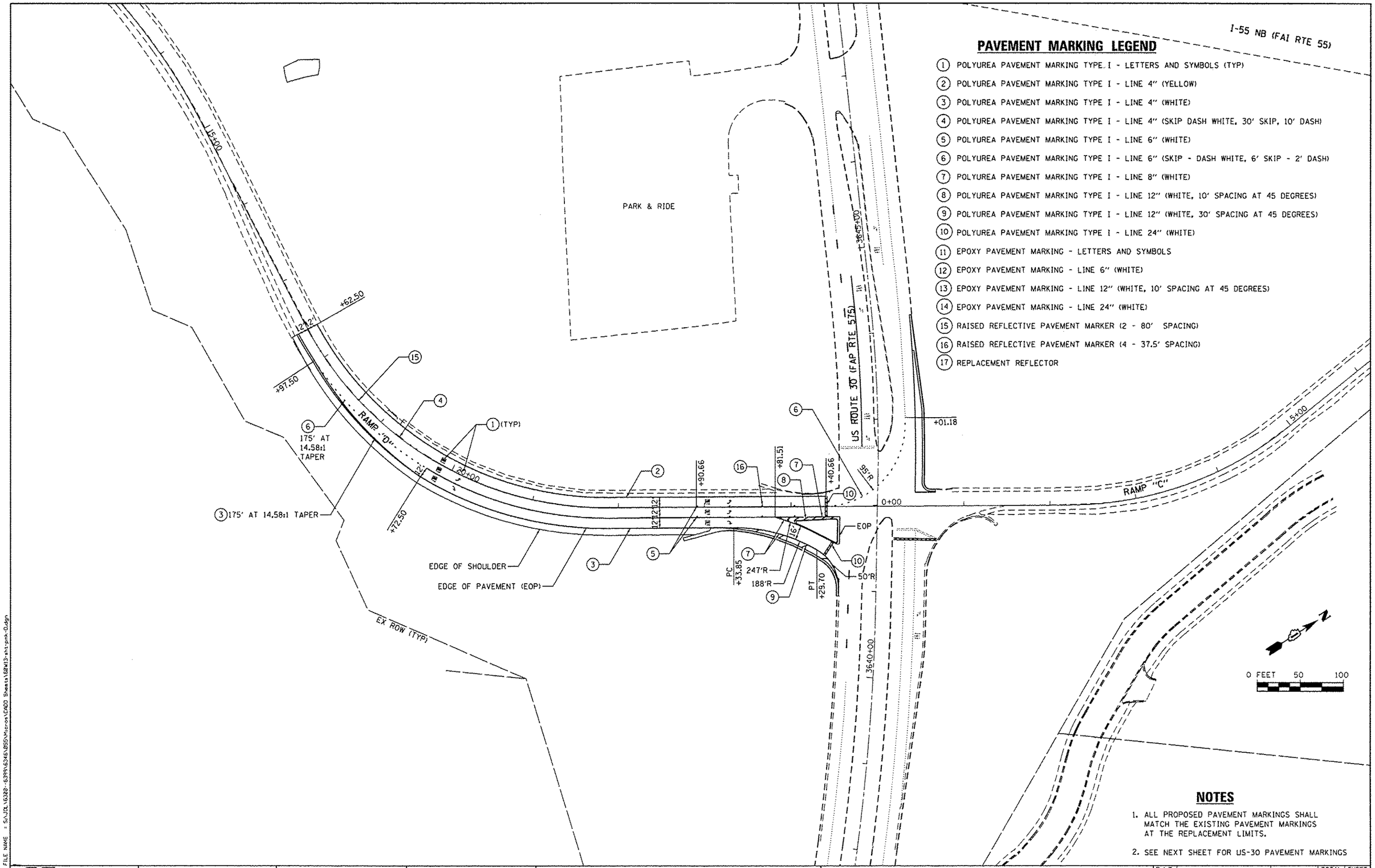

PAVEMENT MARKING LEGEND

1. POLYUREA PAVEMENT MARKING TYPE I - LETTERS AND SYMBOLS (TYP)
2. POLYUREA PAVEMENT MARKING TYPE I - LINE 4" (YELLOW)
3. POLYUREA PAVEMENT MARKING TYPE I - LINE 4" (WHITE)
4. POLYUREA PAVEMENT MARKING TYPE I - LINE 4" (SKIP DASH WHITE, 30' SKIP, 10' DASH)
5. POLYUREA PAVEMENT MARKING TYPE I - LINE 6" (WHITE)
6. POLYUREA PAVEMENT MARKING TYPE I - LINE 6" (SKIP - DASH WHITE, 6' SKIP - 2' DASH)
7. POLYUREA PAVEMENT MARKING TYPE I - LINE 8" (WHITE)
8. POLYUREA PAVEMENT MARKING TYPE I - LINE 12" (WHITE, 10' SPACING AT 45 DEGREES)
9. POLYUREA PAVEMENT MARKING TYPE I - LINE 12" (WHITE, 30' SPACING AT 45 DEGREES)
10. POLYUREA PAVEMENT MARKING TYPE I - LINE 24" (WHITE)
11. EPOXY PAVEMENT MARKING - LETTERS AND SYMBOLS
12. EPOXY PAVEMENT MARKING - LINE 6" (WHITE)
13. EPOXY PAVEMENT MARKING - LINE 12" (WHITE, 10' SPACING AT 45 DEGREES)
14. EPOXY PAVEMENT MARKING - LINE 24" (WHITE)
15. RAISED REFLECTIVE PAVEMENT MARKER (2 - 80' SPACING)
16. RAISED REFLECTIVE PAVEMENT MARKER (4 - 37.5' SPACING)
17. REPLACEMENT REFLECTOR

NOTES

1. ALL PROPOSED PAVEMENT MARKINGS SHALL MATCH THE EXISTING PAVEMENT MARKINGS AT THE REPLACEMENT LIMITS.
2. SEE NEXT SHEET FOR US-30 PAVEMENT MARKINGS

FILE NAME = S:\JOL\6328-6399\6346\055\Micros\CADD Sheets\60W13-sht-pmk-D.dgn

STRAND ASSOCIATES® 1170 SOUTH HOUBOLT ROAD JOLIET, ILLINOIS 60431 (815) 744-4200	USER NAME = dennisw	DESIGNED - JLB	REVISED -	STATE OF ILLINOIS DEPARTMENT OF TRANSPORTATION	PAVEMENT MARKING PLAN RAMP "D"	F.A.P. RTE. 575	SECTION 14-N	COUNTY WILL	TOTAL SHEETS 163 / SHEET NO. 50
	MODEL NAME = Default	DRAWN - DJW	REVISED -					CONTRACT NO. 60W13	
	PLOT SCALE = 100.0000 ' / in.	CHECKED - BMA	REVISED -						
	PLOT DATE = 12/18/2013	DATE - 12/17/13	REVISED -		SCALE: SHEET OF SHEETS STA. TO STA.	ILLINOIS FED. AID PROJECT			

PAVEMENT MARKING LEGEND

1. POLYUREA PAVEMENT MARKING TYPE I - LETTERS AND SYMBOLS (TYP)
2. POLYUREA PAVEMENT MARKING TYPE I - LINE 4" (YELLOW)
3. POLYUREA PAVEMENT MARKING TYPE I - LINE 4" (WHITE)
4. POLYUREA PAVEMENT MARKING TYPE I - LINE 4" (SKIP DASH WHITE, 30' SKIP, 10' DASH)
5. POLYUREA PAVEMENT MARKING TYPE I - LINE 6" (WHITE)
6. POLYUREA PAVEMENT MARKING TYPE I - LINE 6" (SKIP - DASH WHITE, 6' SKIP - 2' DASH)
7. POLYUREA PAVEMENT MARKING TYPE I - LINE 8" (WHITE)
8. POLYUREA PAVEMENT MARKING TYPE I - LINE 12" (WHITE, 10' SPACING AT 45 DEGREES)
9. POLYUREA PAVEMENT MARKING TYPE I - LINE 12" (WHITE, 30' SPACING AT 45 DEGREES)
10. POLYUREA PAVEMENT MARKING TYPE I - LINE 24" (WHITE)
11. EPOXY PAVEMENT MARKING - LETTERS AND SYMBOLS
12. EPOXY PAVEMENT MARKING - LINE 6" (WHITE)
13. EPOXY PAVEMENT MARKING - LINE 12" (WHITE, 10' SPACING AT 45 DEGREES)
14. EPOXY PAVEMENT MARKING - LINE 24" (WHITE)
15. RAISED REFLECTIVE PAVEMENT MARKER (2 - 80' SPACING)
16. RAISED REFLECTIVE PAVEMENT MARKER (4 - 37.5' SPACING)
17. REPLACEMENT REFLECTOR

NOTES

1. ALL PROPOSED PAVEMENT MARKINGS SHALL MATCH THE EXISTING PAVEMENT MARKINGS AT THE REPLACEMENT LIMITS.

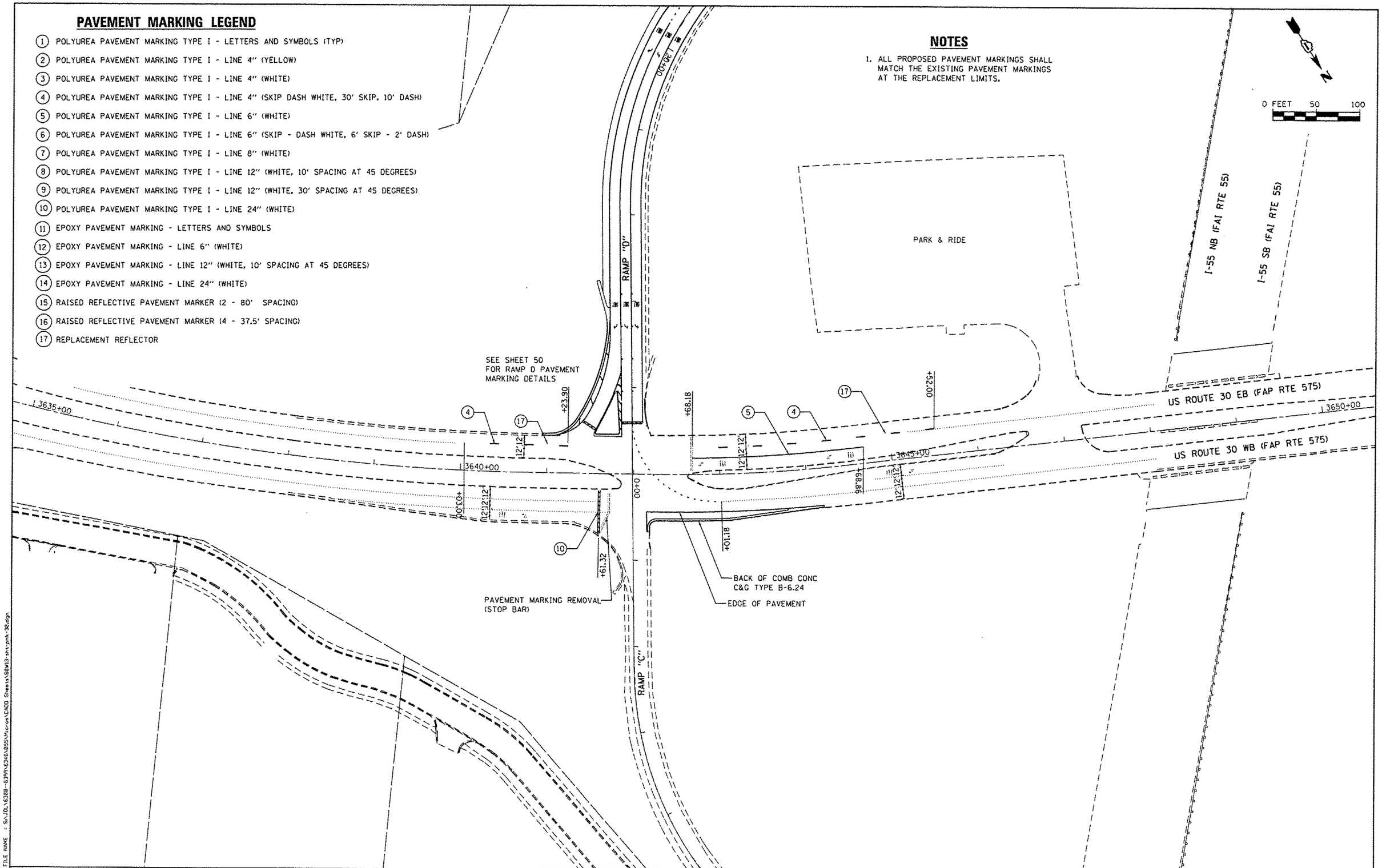

FILE NAME = S:\JD_16308-6399\6346\1855\Micro\C400 Sheets\60W13-sht-pmk-30.dgn

STRAND ASSOCIATES® 1170 SOUTH HOUBOLT ROAD JOLIET, ILLINOIS 60431 (815) 744-4200	USER NAME = dannsw	DESIGNED - JLB	REVISED -
	MODEL NAME = Default	DRAWN - DJW	REVISED -
	PLOT SCALE = 100.0000 ' / in.	CHECKED - BMA	REVISED -
	PLOT DATE = 12/18/2013	DATE - 12/17/13	REVISED -

STATE OF ILLINOIS
DEPARTMENT OF TRANSPORTATION

PAVEMENT MARKING PLAN
IL RTE 30

SCALE: SHEET OF SHEETS STA. TO STA.

F.A.P. RTE.	SECTION	COUNTY	TOTAL SHEETS	SHEET NO.
575	14-N	WILL	163	51

CONTRACT NO. 60W13

ILLINOIS FED. AID PROJECT

I-55 NB (FAI RTE 55)

I-55 SB (FAI RTE 55)

US ROUTE 30 (FAP RTE 575)

US 30

RAMP "A"

I-55 SB ON RAMP CONC

I-55 SB EXIT RAMP

RAMP "B"

EX ROW

0 FEET 50 100

LODGING

RB - GM - 100
STA 12+00.00

FOOD

RB - GM - 101
STA 14+00.00

GAS

RB - GM - 102
STA 16+00.00

RB - GM - 110
STA 23+07.00

RB-GM-113
RELOCATE SIGN PANEL - TYPE 3, RELOCATE GROUND MOUNTED SIGN SUPPORT TO STA. 22+90, OFFSET 86' LT

RB - GM - 111
STA 23+57.00

RB - GM - 109
STA 22+80.00

RB - GM - 115/116
STA 22+80.00

RB - GM - 106A
STA 20+00.00

RB - GM - 103
STA 21+00.00

RB - GM - 107
STA 21+00.00

RB - GM - 106B
STA 19+00.00

RB - GM - 112
STA 23+57.00

RB - GM - 117
STA 23+57.00

SEE NOTE 2

SEE NOTE 2

SEE NOTE 2

RB - GM - 108
STA 22+80.00

DELINEATOR REMOVAL (TYP.)

DELINEATORS (WHITE) (SPACED AT 100' CENTERS ON TANGENT STA. 13+76.50 TO STA. 17+76.50) (TYP)

DELINEATORS (WHITE) (SPACED AT 55' CENTERS ON CURVE STA. 17+76.50 TO STA. 22+16.50) (TYP)

RB - GM - 105
STA 19+50.00

RB - GM - 104
STA 18+00.00

RB - GM - 114
STA 21+00.00

GUIDE SIGN SEQUENCE NUMBERING CODE EXAMPLE

RB - GM - 100

DIRECTION OF TRAFFIC
RB - RAMP B
RD - RAMP D

SIGN PANEL NUMBER

MOUNTING TYPE
GM - GROUND MOUNTED

NEW SIGN PANEL

* NEW SIGN PANEL AND SUPPORT(S)

\# REMOVE AND REPLACE SIGN PANEL WITH NEW SUPPORT(S)

X EXISTING SIGN PANEL AND SUPPORTS TO BE REMOVED AND REPLACED

NOTES:

1. SEE SIGN INFORMATION TABLE AND SIGN DETAIL SHEETS FOR PROPOSED WORK.
2. SIGN TO BE RELOCATED AND GROUND MOUNTED BEYOND SLOPE INTERCEPT DURING STAGE CONSTRUCTION. PAID FOR AS TRAFFIC CONTROL AND PROTECTION (EXPRESSWAYS).

FILE NAME = S:\JOA\6328--6399\6346\055\Microsx\CADD Sheets\60W13-sht-sign-Bdgn

STRAND ASSOCIATES® 1170 SOUTH HOUBOLT ROAD JOLIET, ILLINOIS 60431 (815) 744-4200	USER NAME = dennisw	DESIGNED - JLB	REVISED -
	MODEL NAME = Default	DRAWN - DJW	REVISED -
	PLOT SCALE = 100.0000 ' / in.	CHECKED - BMA	REVISED -
	PLOT DATE = 12/18/2013	DATE - 12/17/13	REVISED -

STATE OF ILLINOIS
DEPARTMENT OF TRANSPORTATION

SIGNAGE PLAN
RAMP "B"

SCALE: SHEET OF SHEETS STA. TO STA.

F.A.P. RTE.	SECTION	COUNTY	TOTAL SHEETS	SHEET NO.
575	14-N	WILL	163	52

CONTRACT NO. 60W13

ILLINOIS FED. AID PROJECT

I-55 NB (FAI RTE 55)

US ROUTE 30 (FAP RTE 575)

PARK & RIDE

0 FEET 50 100

FOOD

RD - GM - 200
STA 16+50.00

GAS

RD - GM - 201
STA 18+50.00

RD - GM - 202
STA 20+00.00

RD - GM - 203
STA 20+00.00

RD - GM - 204A
STA 22+00.00

RD - GM - 204B
STA 21+00.00

RD - GM - 205
STA 21+50.00

RD - GM - 206
STA 22+50.00

RD - GM - 207
STA 22+50.00
(MOUNTED ON LIGHT POLE)

RD - GM - 208
STA 24+00.00

RB - GM - 210/211
STA 24+00.00

RD - GM - 209
STA 24+00.00
(MOUNTED ON LIGHT POLE)

SEE NOTE 2

DELINEATOR REMOVAL (TYP.)

SEE NOTE 2

DELINEATORS (WHITE) (SPACED AT 55' CENTERS ON CURVE STA. 17+62.00 TO STA. 23+12.00) (TYP)

EX ROW (TYP)

RAMP "D"

RAMP "C"

15+00

20+00

0+00

15+00

T-3615+00

T-3640+00

12' TYP

GUIDE SIGN SEQUENCE NUMBERING CODE EXAMPLE

RB - GM - 100

DIRECTION OF TRAFFIC
RB - RAMP B
RD - RAMP D

MOUNTING TYPE
GM - GROUND MOUNTED

SIGN PANEL NUMBER

NEW SIGN PANEL

* NEW SIGN PANEL AND SUPPORT(S)

\# REMOVE AND REPLACE SIGN PANEL WITH NEW SUPPORT(S)

X EXISTING SIGN PANEL AND SUPPORTS TO BE REMOVED AND REPLACED

NOTES:

1. SEE SIGN INFORMATION TABLE AND SIGN DETAIL SHEETS FOR PROPOSED WORK.
2. SIGN TO BE RELOCATED AND GROUND MOUNTED BEYOND SLOPE INTERCEPT DURING STAGE CONSTRUCTION. PAID FOR AS TRAFFIC CONTROL AND PROTECTION(EXPRESSWAYS).

FILE NAME = S:\JOL\6388-6399\6246\855\Micros\CADD Sheets\60W13-sht-sign-D.dgn

STRAND ASSOCIATES
1170 SOUTH HOUBOLT ROAD
JOLIET, ILLINOIS 60431
(815) 744-4200

USER NAME = dennisw	DESIGNED - JLB	REVISED -	
MODEL NAME = Default	DRAWN - DJW	REVISED -	
PLOT SCALE = 100.0000 ' / in.	CHECKED - BMA	REVISED -	
PLOT DATE = 12/18/2013	DATE - 12/17/13	REVISED -	

STATE OF ILLINOIS
DEPARTMENT OF TRANSPORTATION

SIGNAGE PLAN
RAMP "D"

SCALE: SHEET OF SHEETS STA. TO STA.

F.A.P. RTE.	SECTION	COUNTY	TOTAL SHEETS	SHEET NO.
575	14-N	WILL	163	53

CONTRACT NO. 60W13

ILLINOIS FED. AID PROJECT

SIGN DETAIL
1:25

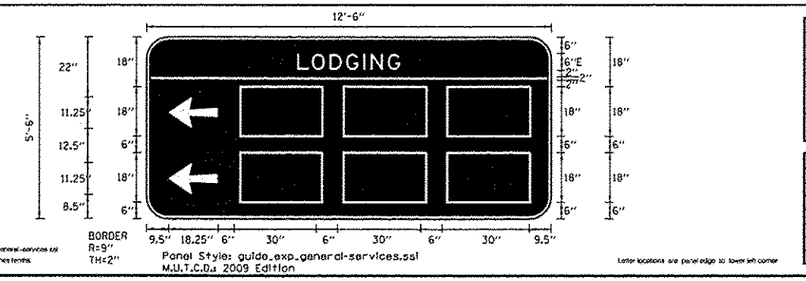

Panel Style: guide_exp_general-services.ssl
Dimensions are in inches tenths
Panel Style: guide_exp_general-services.ssl
M.U.T.C.D.: 2009 Edition
Letter locations are panel edge to lower left corner

SIGN NUMBER	RB-GM-100
WIDTH x HGHT.	12'-6" x 5'-6"
BORDER WIDTH	2"
CORNER RADIUS	9"
MOUNTING	GROUND
BACKGROUND	TYPE: AP
	COLOR: Blue
LEGEND/BORDER	TYPE: ZZ
	COLOR: White/White

SYMBOL	ROT	X	Y	WID	HT
DEMOUNTABLE ARROW TY A	90	7.9	32.9	11.25	18.25
DEMOUNTABLE ARROW TY A	90	7.9	9.8	11.25	18.25

LETTER POSITIONS (X)

L	O	D	G	I	N	G		LENGTH	SERIES/SIZE
34.6	59.9	88.4	122.4	151.7	181.3	217.5			E 2000
								37.8'	6"

SIGN DETAIL
1:25

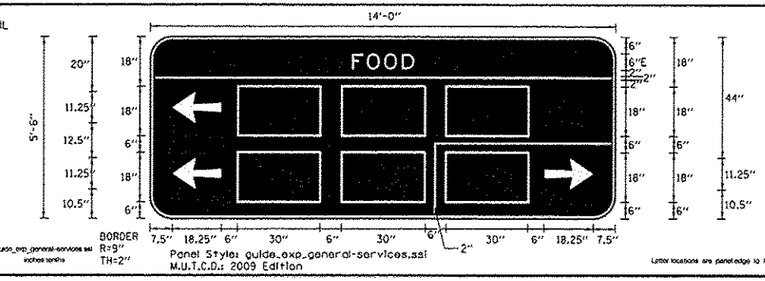

Panel Style: guide_exp_general-services.ssl
Dimensions are in inches tenths
Panel Style: guide_exp_general-services.ssl
M.U.T.C.D.: 2009 Edition
Letter locations are panel edge to lower left corner

SIGN NUMBER	RB-GM-101
WIDTH x HGHT.	14'-0" x 5'-6"
BORDER WIDTH	2"
CORNER RADIUS	9"
MOUNTING	GROUND
BACKGROUND	TYPE: AP
	COLOR: Blue
LEGEND/BORDER	TYPE: ZZ
	COLOR: White/White

SYMBOL	ROT	X	Y	WID	HT
DEMOUNTABLE ARROW TY A	90	7.9	34.5	11.25	18.25
DEMOUNTABLE ARROW TY A	90	8	10.4	11.25	18.25
DEMOUNTABLE ARROW TY A	270	143	10.8	11.25	18.25

LETTER POSITIONS (X)

F	O	O	D		LENGTH	SERIES/SIZE
73.1	78.4	84.6	91.1			E 2000
					22.9'	6"

SIGN DETAIL
1:25

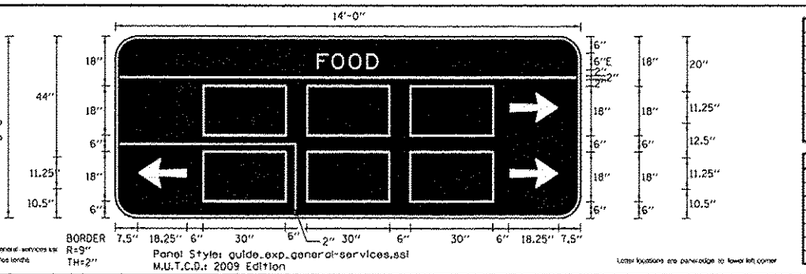

Panel Style: guide_exp_general-services.ssl
Dimensions are in inches tenths
Panel Style: guide_exp_general-services.ssl
M.U.T.C.D.: 2009 Edition
Letter locations are panel edge to lower left corner

SIGN NUMBER	RB-GM-200
WIDTH x HGHT.	14'-0" x 5'-6"
BORDER WIDTH	2"
CORNER RADIUS	9"
MOUNTING	GROUND
BACKGROUND	TYPE: AP
	COLOR: Blue
LEGEND/BORDER	TYPE: ZZ
	COLOR: White/White

SYMBOL	ROT	X	Y	WID	HT
DEMOUNTABLE ARROW TY A	270	143	34.5	11.25	18.25
DEMOUNTABLE ARROW TY A	90	8	10.6	11.25	18.25
DEMOUNTABLE ARROW TY A	270	143	10.8	11.25	18.25

LETTER POSITIONS (X)

F	O	O	D		LENGTH	SERIES/SIZE
73.1	78.4	84.6	91.1			E 2000
					22.9'	6"

SIGN DETAIL
1:25

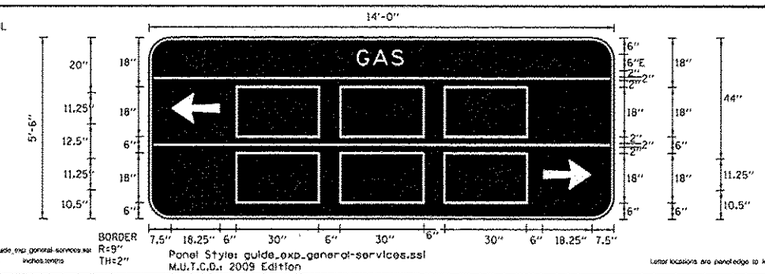

Panel Style: guide_exp_general-services.ssl
Dimensions are in inches tenths
Panel Style: guide_exp_general-services.ssl
M.U.T.C.D.: 2009 Edition
Letter locations are panel edge to lower left corner

SIGN NUMBER	RB-GM-102 /RD-GM-201
WIDTH x HGHT.	14'-0" x 5'-6"
BORDER WIDTH	2"
CORNER RADIUS	9"
MOUNTING	GROUND
BACKGROUND	TYPE: AP
	COLOR: Blue
LEGEND/BORDER	TYPE: ZZ
	COLOR: White/White

SYMBOL	ROT	X	Y	WID	HT
DEMOUNTABLE ARROW TY A	90	8	34.5	11.25	18.25
DEMOUNTABLE ARROW TY A	270	44	19.3	11.25	18.25

LETTER POSITIONS (X)

G	A	S		LENGTH	SERIES/SIZE
72.4	82.3	88.1			E 2000
				17.3'	6"

FILE NAME = S:\JOL\60302-63991\6346\865\Micro\CADD Sheets\60W13-sht-sign-design

STRAND ASSOCIATES
1170 SOUTH HOUBOLT ROAD
JOLIET, ILLINOIS 60431
(815) 744-4200

USER NAME = dennisw	DESIGNED - JLB	REVISED -	
MODEL NAME = Default	DRAWN - DJW	REVISED -	
PLOT SCALE = 100.0000 ' / in.	CHECKED - BMA	REVISED -	
PLOT DATE = 12/18/2013	DATE - 12/17/13	REVISED -	

STATE OF ILLINOIS
DEPARTMENT OF TRANSPORTATION

SIGNAGE PLAN

SCALE: | SHEET OF SHEETS | STA. TO STA.

F.A.P. RTE.	SECTION	COUNTY	TOTAL SHEETS	SHEET NO.
575	14-N	WILL	163	54
		CONTRACT NO. 60W13		
		ILLINOIS FED. AID PROJECT		

SIGN DETAIL
1:25

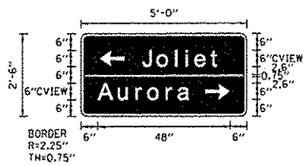

SIGN NUMBER	RB-GM-105
WIDTH x HGHT.	5'-0" x 2'-6"
BORDER WIDTH	0.75"
CORNER RADIUS	2.25"
MOUNTING	Ground
BACKGROUND	TYPE: AP
	COLOR: Green
LEGEND&BORDER	TYPE: AP
	COLOR: White/White

SYMBOL	ROT	X	Y	WID	HT
DEMOUNTABLE ARROW	90	9.6	18	6	9
DEMOUNTABLE ARROW	270	44.8	6	6	9

Panel Style: guide_con_destination.ssl
Dimensions are in inches tenths

Panel Style: guide_con_destination.ssl
M.U.T.C.D.: 2009 Edition

Letter locations are panel edge to lower left corner

LETTER POSITIONS (X)

J	o	l	i	e	t		LENGTH	SUBSIGNSIZE
22.5	27.0	34.6	38.2	41.5	47.3		28.4	CLEARVIEW SW 64.3
A	u	r	o	r	a		32.6	CLEARVIEW 64.3
6.6	13.9	20.2	24.5	31.2	35.3			

SIGN DETAIL
1:25

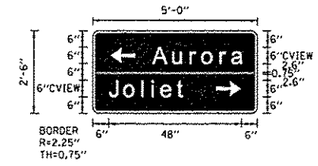

SIGN NUMBER	RB-GM-205
WIDTH x HGHT.	5'-0" x 2'-6"
BORDER WIDTH	0.75"
CORNER RADIUS	2.25"
MOUNTING	Ground
BACKGROUND	TYPE: AP
	COLOR: Green
LEGEND&BORDER	TYPE: AP
	COLOR: White/White

SYMBOL	ROT	X	Y	WID	HT
DEMOUNTABLE ARROW	90	6.2	18	6	9
DEMOUNTABLE ARROW	270	44.8	6	6	9

Panel Style: guide_con_destination.ssl
Dimensions are in inches tenths

Panel Style: guide_con_destination.ssl
M.U.T.C.D.: 2009 Edition

Letter locations are panel edge to lower left corner

LETTER POSITIONS (X)

A	u	r	o	r	a		LENGTH	SUBSIGNSIZE
22.2	29.5	33.8	40.1	46.8	51		32.6	CLEARVIEW SW 64.3
J	o	l	i	e	t		28.4	CLEARVIEW SW 64.3
6.2	11.7	18.3	21.9	28.2	31.1			

SIGN DETAIL
1:25

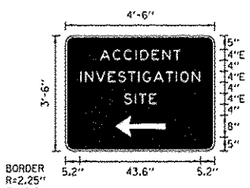

SIGN NUMBER	RB-GM-106 / RD-GM-204
WIDTH x HGHT.	4'-6" x 3'-6"
BORDER WIDTH	0.5"
CORNER RADIUS	2.25"
MOUNTING	Ground
BACKGROUND	TYPE: AP
	COLOR: Blue
LEGEND&BORDER	TYPE: AP
	COLOR: White/White

SYMBOL	ROT	X	Y	WID	HT
DEMOUNTABLE ARROW - TY. A - LATLMOX13	90	17.9	5	9	18.3

Panel Style: guide_con_general_services.ssl
Dimensions are in inches tenths

Panel Style: guide_con_general_services.ssl
M.U.T.C.D.: 2009 Edition

Letter locations are panel edge to lower left corner

LETTER POSITIONS (X)

A	C	C	I	D	E	N	T		LENGTH	SUBSIGNSIZE
12.3	18.9	20.9	25.1	26.9	31	34.8	38.7		29.5	E 2000 4
I	N	V	E	S	T	I	G	A	T	I	O	N		43.8	E 2000 4
5.2	6.9	10.9	15.2	18.8	22.5	26.1	27.8	31.6	35	39.7	41.3	43.6			
S	I	T	E						12.1	E 2000 4
20.9	25	28.4	30.1							

FILE NAME = S:\JOB\60280-69\PK6346\DESIGN\Micro\CADD Sheets\60W13-sht-signs-det1.dgn

STRAND ASSOCIATES®
1170 SOUTH HOUBOLT ROAD
JOLIET, ILLINOIS 60431
(815) 744-4200

USER NAME = dennisw	DESIGNED - JLB	REVISED -	
MODEL NAME = Default	DRAWN - DJW	REVISED -	
PLOT SCALE = 100.0000 ' / in.	CHECKED - BMA	REVISED -	
PLOT DATE = 12/10/2013	DATE - 12/17/13	REVISED -	

STATE OF ILLINOIS
DEPARTMENT OF TRANSPORTATION

SIGNAGE PLAN

SCALE: | SHEET OF SHEETS | STA. TO STA.

F.A.P. RTE.	SECTION	COUNTY	TOTAL SHEETS	SHEET NO.
575	14-N	WILL	163	55
		CONTRACT NO. 60W13		
		ILLINOIS FED. AID PROJECT		

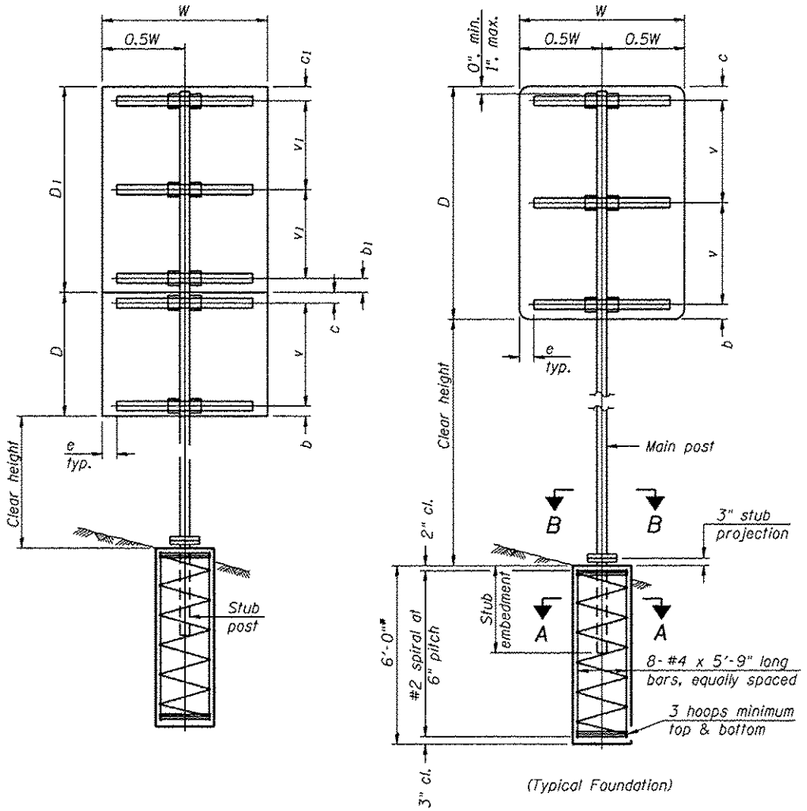

(Typical Foundation)

SINGLE POST ASSEMBLY EXAMPLES

* Dimensional changes required for varying site conditions shall be approved by the Engineer.

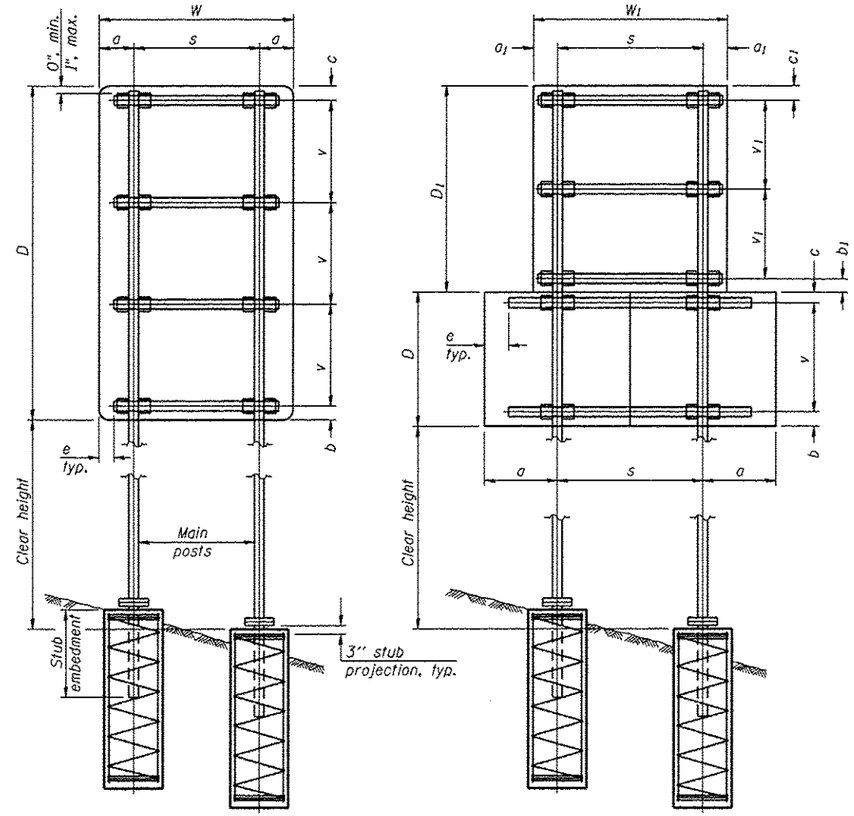

DUAL POST ASSEMBLY EXAMPLES

a or a_1 = 6" min. to 2'-0" max. (Approximately 0.2W or $0.2W_1$)
b or b_1 = 3" min. to 4" max
c or c_1 = 3" min. to 4" max
e = 0" min. to 6" max
s = 3'-0" min. to 6'-0" max. (Approximately 0.6W or $0.6W_1$)
v or v_1 = 2'-0" min. to 2'-11" max.

MAIN POST STEEL TUBING	WEIGHT PER FOOT (POUND)	STUB POST TABLE		MAIN POST TABLE				
		Stub Embedment	Stub Post Length	Bolt Size	A	t	R	Bolt Circle
3" x 2" x 1/4"	7.11	2'-0"	2'-3"	1/2" x 2 3/4"	8 1/4"	5/8"	9/32"	6 1/2"
4" x 2" x 1/4"	8.81	2'-0"	2'-3"	1/2" x 2 3/4"	8 1/4"	5/8"	9/32"	6 1/2"
4" x 3" x 1/4"	10.51	2'-3"	2'-6"	5/8" x 3 1/4"	10"	3/4"	11/32"	8"
5" x 3" x 1/4"	12.21	2'-3"	2'-6"	5/8" x 3 1/4"	10"	3/4"	11/32"	8"
6" x 3" x 1/4"	13.91	2'-3"	2'-6"	5/8" x 3 1/4"	11 1/2"	3/4"	11/32"	9 1/2"
6" x 4" x 1/4"	15.62	2'-3"	2'-6"	3/4" x 3 1/2"	11 1/2"	3/4"	13/32"	9 1/2"
6" x 4" x 5/16"	19.08	2'-3"	2'-6"	3/4" x 3 1/2"	11 1/2"	3/4"	13/32"	9 1/2"
7" x 5" x 1/4"	19.02	2'-6"	2'-9"	3/4" x 3 1/2"	1'-2"	3/4"	13/32"	1'-0"
8" x 4" x 1/4"	19.02	2'-6"	2'-9"	3/4" x 3 1/2"	1'-2"	3/4"	13/32"	1'-0"
8" x 6" x 1/4"	22.42	2'-6"	2'-9"	7/8" x 3 1/2"	1'-2"	3/4"	15/32"	1'-0"

GENERAL NOTES

Posts shall be plumbed by using shims with post-to-stub post connection bolts snug tight only. Final tightening of all High Strength Bolts shall be in accordance with Article 727.05 and threads at the junction of the bolt and nut shall be burred or center punched to prevent the nut from loosening.

One foundation requires 0.7 cubic yards of concrete and 46 pounds of reinforcement bars and spiral hoops.

LOADING: 80 mph wind with 30% gust factor, normal to sign.

DESIGN STRESSES:
Structural steel - 20,000 psi
Reinforcing steel - 20,000 psi
Concrete - 1,400 psi
Footing soil pressure - 2,000 psf

After fabrication, the post, fuse plate, base plate and upper 6", min. of the stub post shall be hot-dip galvanized in accordance with AASHTO M111. All bolts, nuts and washers shall be hot-dip galvanized in accordance with AASHTO M232.

For Sections A-A and B-B, see Base Sheet BAT-A-2.

FOUNDATIONS:
All necessary excavation or drilling (except in rock); backfilling with excavated material; disposal of unsuitable or surplus material; formwork; and furnishing and placing the Class SI Concrete and reinforcement bars, shall be included in the pay item used for foundations.

The measurement of the tubular steel shall be computed on the basis of the weight per foot of the support, multiplied by the combined length of the main posts and stub posts.

BAT-A-1 6-1-12

(Sheet 1 of 2)

STRAND ASSOCIATES® 1170 SOUTH HOUBOLT ROAD JOLIET, ILLINOIS 60431 (815) 744-4200

USER NAME = dennisw	DESIGNED - JLB	REVISED -	
MODEL NAME = Default	DRAWN - DJW	REVISED -	
PLOT SCALE = 100.0000 ' / in.	CHECKED - BMA	REVISED -	
PLOT DATE = 12/18/2013	DATE - 12/17/13	REVISED -	

STATE OF ILLINOIS
DEPARTMENT OF TRANSPORTATION

BREAK-AWAY TUBULAR STEEL
SIGN POSTS AND FOUNDATIONS

SCALE: SHEET OF SHEETS STA. TO STA.

F.A.P. RTE.	SECTION	COUNTY	TOTAL SHEETS	SHEET NO.
575	14-N	WILL	163	56
		CONTRACT NO. 60W13		
		ILLINOIS FED. AID PROJECT		

FILE NAME = S:\JD.16328--6299\6346\855\Microsx\CADD Sheets\60W13-sht-sign-detl.dgn

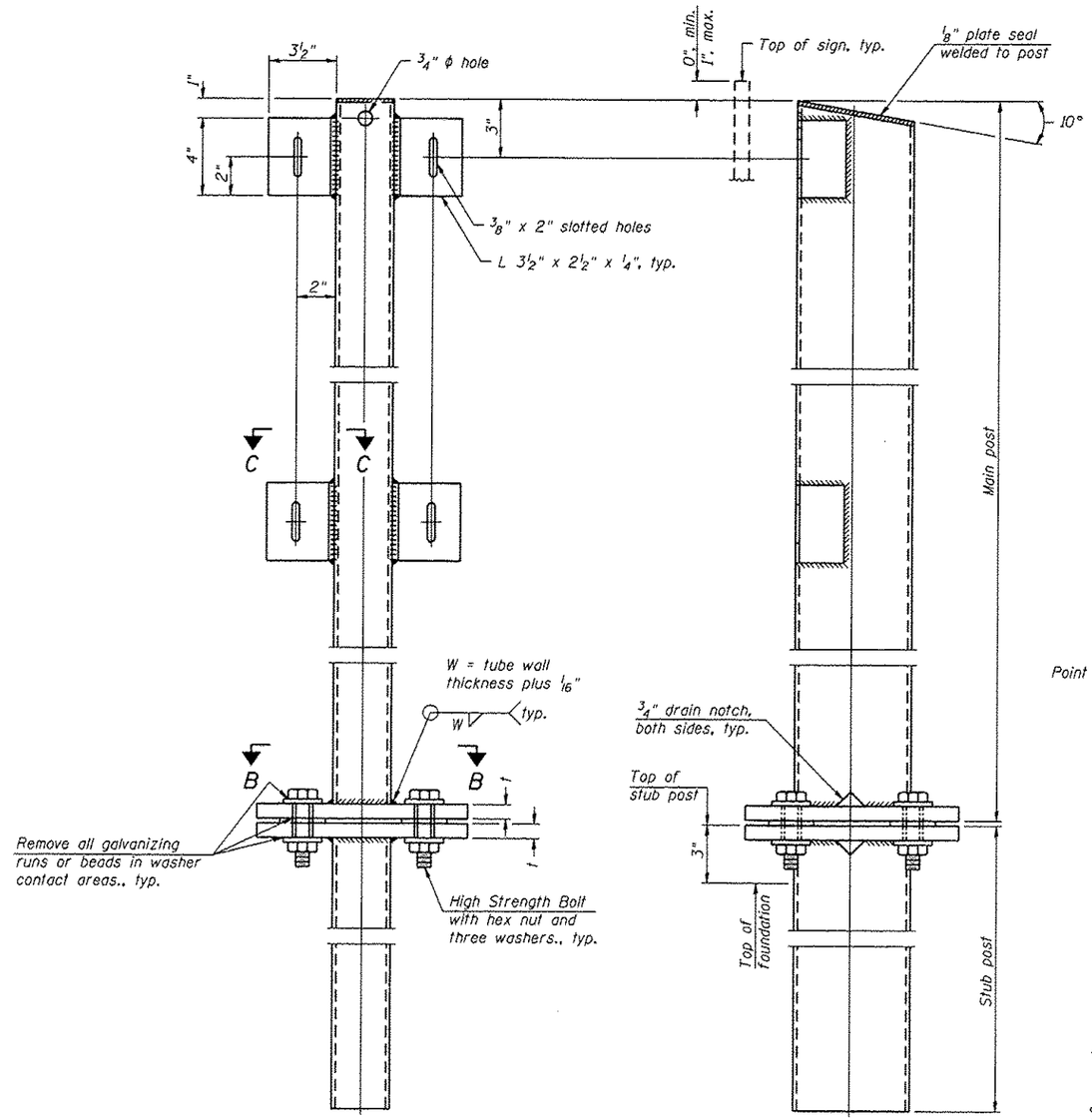

FRONT ELEVATION

SIDE ELEVATION

MAIN POST & STUB POST

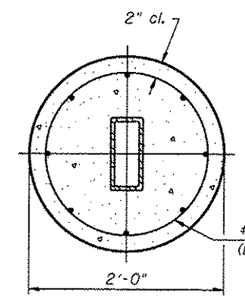

SECTION A-A
(CAST-IN-PLACE)

OR

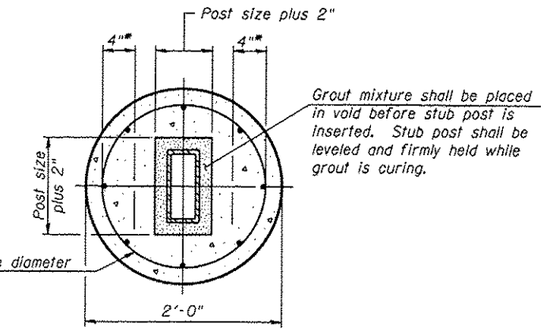

SECTION A-A
(PRECAST)

* Hot dip galvanized lifting loops or inserts may be placed in precast foundation inside the spiral reinforcement but not within 6" of the long axis of the post. Inserts must be adequate for safely lifting a total of 3,000 pounds and must not interfere with installation of the stub post or proper functioning of the slip base.

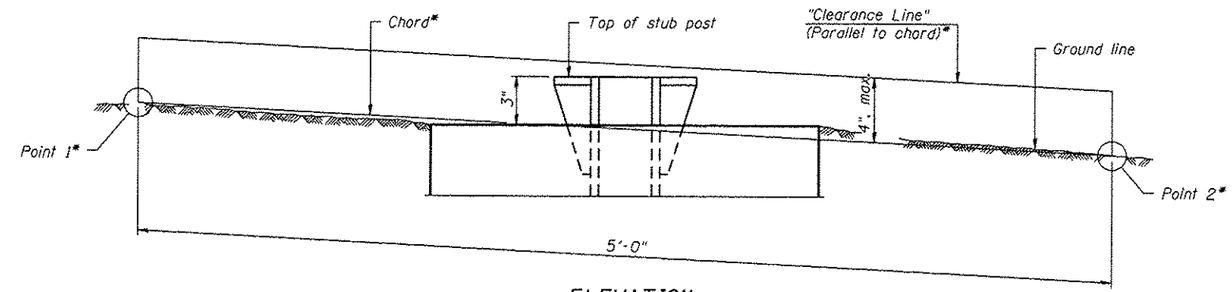

ELEVATION
GROUND LINE & STUB POST

* For all "Point 1" and "Point 2" locations, "Clearance Line" must be at or above top of stub post.

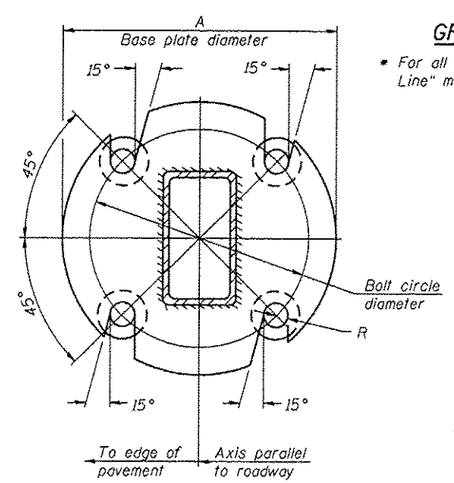

SECTION B-B

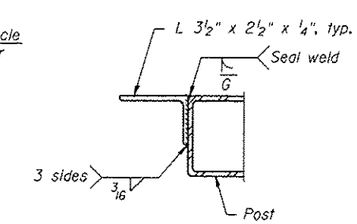

SECTION C-C
Weld continuously around corners.

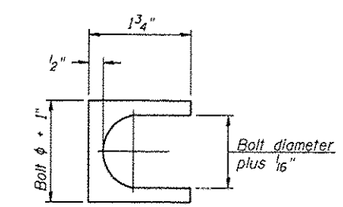

SHIM DETAIL
Furnish two 0.01" thick and two 0.03" thick stainless steel or brass (ASTM B36) shims per post.

BAT-A-2 6-1-12

(Sheet 2 of 2)

STRAND ASSOCIATES® 1170 SOUTH HOUBOLT ROAD JOLIET, ILLINOIS 60431 (815) 744-4200	USER NAME = dennisw	DESIGNED - JLB	REVISED -	STATE OF ILLINOIS DEPARTMENT OF TRANSPORTATION	BREAK-AWAY TUBULAR STEEL SIGN POSTS AND DETAILS
	MODEL NAME = Default	DRAWN - DJW	REVISED -		
	PLOT SCALE = 100.0000 ' / in.	CHECKED - BMA	REVISED -		
	PLOT DATE = 12/10/2013	DATE - 12/17/13	REVISED -		SCALE: SHEET OF SHEETS STA. TO STA.

F.A.P. RTE.	SECTION	COUNTY	TOTAL SHEETS	SHEET NO.
575	14-N	WILL	163	57
		CONTRACT NO. 60W13		
		ILLINOIS FED. AID PROJECT		

FILE NAME = S:\IDL\6303-5399\6346\855\Murcos\CADD Sheets\60W13-sht-sign-details.dgn

SIGN INFORMATION			EXISTING SIGN SCHEDULE										PROPOSED SIGN SCHEDULE											
			EXISTING LOCATION			EXISTING SIZE		REMOVE					PROPOSED LOCATION			PROPOSED SIZE		INSTALL						
SIGN #	DESCRIPTION	DESIGNATION	STA.	OFFSET L/R	SUPPORT TYPE	WIDTH (FT)	HEIGHT (FT)	REMOVE SIGN PANEL - TYPE 1 (SQ FT)	REMOVE SIGN PANEL - TYPE 2 (SQ FT)	REMOVE SIGN PANEL - TYPE 3 (SQ FT)	REMOVE GROUND MOUNTED SIGN SUPPORT (EACH)	REMOVE CONCRETE FOUNDATION - GROUND MOUNT (EACH)	STA.	OFFSET L/R	SUPPORT TYPE	WIDTH (FT)	HEIGHT (FT)	SIGN PANEL - TYPE 1 (SQ FT)	SIGN PANEL - TYPE 2 (SQ FT)	SIGN PANEL - TYPE 3 (SQ FT)	WOOD SIGN SUPPORT (FT)	STRUCTURAL STEEL SIGN SUPPORT - BREAKAWAY	RELOCATE SIGN PANEL - TYPE 3 (SQ FT)	RELOCATE GROUND MOUNTED SIGN SUPPORT (EACH)
RB-GM-100	LODGING	Specific Service	12+12.00	20.2 RT	GROUND MOUNT	12.0	8.0			96	2	2	12+00.00	20.0 RT	GROUND MOUNT	12.5	5.5			68.75		•		
RB-GM-101	FOOD	Specific Service	14+14.00	28.6 RT	GROUND MOUNT	12.0	8.0			96	2	2	14+00.00	30.0 RT	GROUND MOUNT	14.0	5.5			77		•		
RB-GM-102	GAS	Specific Service	16+14.00	25.7 RT	GROUND MOUNT	9.5	5.0			47.5	2	2	16+00.00	46.0 RT	GROUND MOUNT	14.0	5.5			77		•		
RB-GM-103	ADVANCED INTERSECTION LANE CONTROL	R3-8x	17+99.00	29.5 LT	GROUND MOUNT	4.0	2.5		10		1		21+00.00	35.0 LT	GROUND MOUNT	6.0	2.5		15		29.00ⓓ			
RB-GM-104	ADVANCED INTERSECTION LANE CONTROL	R3-8x											21+00.00	52.0 RT	GROUND MOUNT	6.0	2.5		15		29.00ⓓ			
RB-GM-105	DESTINATION	Specific Service	20+56.00	33.1 RT	GROUND MOUNT	7.0	6.0			42	2	2	19+50.00	52.0 RT	GROUND MOUNT	5.0	2.5		12.5		29.00ⓓ			
RB-GM-106A	PARK AND RIDE	D4-2	21+02.00	35.1 LT	GROUND MOUNT	2.5	4.0		10		1		20+00.00	30.0 LT	GROUND MOUNT	2.5	3.0	7.5			15.00			
RB-GM-106B	A.I.S.		21+02.00	35.1 LT	GROUND MOUNT								19+00.00	30.0 LT	GROUND MOUNT	4.5	3.5		15.75		31.00ⓓ			
RB-GM-107	WRONG WAY	R5-1a	21+02.00	35.1 LT	GROUND MOUNT	3.0	2.0	6			1		21+00.00	35.0 LT	GROUND MOUNT	3.5	2.5	8.75			••			
RB-GM-108	DO NOT ENTER	R5-1	22+56.00	27.0 RT	GROUND MOUNT	3.0	3.0	9			1		22+80.00	52.0 RT	GROUND MOUNT	4.0	4.0		16		32.00ⓓ			
RB-GM-109	DO NOT ENTER	R5-1	22+58.00	33.8 LT	GROUND MOUNT	3.0	3.0	9			1		22+80.00	35.0 LT	GROUND MOUNT	4.0	4.0		16		32.00ⓓ			
RB-GM-110	RIGHT TURN PROHIBITION	R3-1	23+07.00	85.8 LT	GROUND MOUNT	3.0	3.0	9			1		23+07.00	85.8 LT	GROUND MOUNT	3.0	3.0	9			•••			
RB-GM-111	KEEP RIGHT	R4-7	23+57.00	95.2 LT	GROUND MOUNT	2.0	2.5	5			1		23+57.00	95.2 LT	GROUND MOUNT	2.0	2.5	5			•••			
RB-GM-112	KEEP RIGHT	R4-7	23+57.00	16.1 RT	GROUND MOUNT	2.0	2.5	5			1		23+57.00	16.1 RT	GROUND MOUNT	2.0	2.5	5			•••			
RB-GM-113	I 55 SOUTH	Destination	22+90.00	68.1 LT	GROUND MOUNT	12.0	8.0			96	2	2	22+90.00	85.5 LT	GROUND MOUNT								96.00	1.00
RB-GM-114	WRONG WAY	R5-1a											21+00.00	52.0 RT	GROUND MOUNT	3.5	2.5	8.75			••			
RB-GM-115	ONE WAY	R6-1											22+80.00	35.0 LT	GROUND MOUNT	3.0	1.0	3			••			
RB-GM-116	ONE WAY	R6-1											22+80.00	35.0 LT	GROUND MOUNT	3.0	1.0	3			••			
RB-GM-117	NO TURN ON RED EXCEPT RT LANE	R10-11C											23+57.00	16.1 RT	GROUND MOUNT	2.5	3.5	8.75			•••			
RD-GM-200	FOOD	Specific Service	16+54.00	47.5 RT	GROUND MOUNT	12.0	8.0			96	2	2	16+50.00	41.5 RT	GROUND MOUNT	14.0	5.5			77		•		
RD-GM-201	GAS	Specific Service	18+60.00	45.0 RT	GROUND MOUNT	9.0	8.0			72	2	2	18+50.00	46.5 RT	GROUND MOUNT	14.0	5.5			77		•		
RD-GM-202	ADVANCED INTERSECTION LANE CONTROL	R3-8x											20+00.00	24.0 LT	GROUND MOUNT	4.5	2.5		11.25		29.00ⓓ			
RD-GM-203	ADVANCED INTERSECTION LANE CONTROL	R3-8x											20+00.00	52.0 RT	GROUND MOUNT	4.5	2.5		11.25		29.00ⓓ			
RD-GM-204A	PARK AND RIDE	D4-2	20+93.00	22.8 LT	GROUND MOUNT	2.5	4.0		10		1		21+00.00	24.0 LT	GROUND MOUNT	2.5	3.0	7.5			15.00			
RD-GM-204B	A.I.S.		20+93.00	22.8 LT	GROUND MOUNT								22+00.00	24.0 LT	GROUND MOUNT	4.5	3.5		15.75		31.00ⓓ			
RD-GM-205	DESTINATION	Specific Service	21+87.00	42.2 RT	GROUND MOUNT	7.0	6.0			42	2	2	21+50.00	52.0 RT	GROUND MOUNT	5.0	2.5		12.5		29.00ⓓ			
RD-GM-206	WRONG WAY	R5-1a	22+36.00	24.5 LT	GROUND MOUNT	3.0	2.0	6			1		22+50.00	24.0 LT	GROUND MOUNT	3.5	2.5	8.75			29.00ⓓ			
RD-GM-207	WRONG WAY	R5-1a	22+54.00	31.8 RT	GROUND MOUNT	3.0	2.0	6			1		22+50.00	52.0 RT	GROUND MOUNT	3.5	2.5	8.75			29.00			
RD-GM-208	DO NOT ENTER	R5-1	23+99.00	32.1 RT	GROUND MOUNT	3.0	3.0	9			1		24+00.00	24.0 LT	GROUND MOUNT	4.0	4.0		16		32.00ⓓ			
RD-GM-209	DO NOT ENTER	R5-1	24+01.00	24.6 LT	GROUND MOUNT	3.0	3.0	9			1		24+00.00	52.0 RT	GROUND MOUNT	4.0	4.0		16		32.00ⓓ			
RD-GM-210	ONE WAY	R6-1											24+00.00	24.0 LT	GROUND MOUNT	3.0	1.0	3			••			
RD-GM-211	ONE WAY	R6-1											24+00.00	24.0 LT	GROUND MOUNT	3.0	1.0	3			••			
TOTAL								73	30	587.5	29	16	TOTAL					89.75	173	376.75	452	•	96.00	1.00

• SEE STEEL SIGN SUPPORT SCHEDULE

•• SIGN PANEL TO SHARE SUPPORT WITH ANOTHER SIGN PANEL

••• SIGN PANEL TO BE MOUNTED ON TRAFFIC SIGNAL POLE OR LIGHT POLE

ⓓ DENOTES TWO SUPPORTS REQUIRED

STEEL SIGN SUPPORT SCHEDULE

SIGN #	DESCRIPTION	DESIGNATION	PROPOSED SIZE		STEEL SIGN SUPPORT										CONCRETE FOUNDATIONS				REINFORCEMENT BARS	
			WIDTH (LF)	HEIGHT (LF)	CLEAR HEIGHT (FT)	P1 (LF)	P2 (LF)	POST TYPE	POUNDS / FT	# OF POSTS	STUB (FT)	STUB TOTAL	STEEL SIGN SUPPORT - BREAKAWAY (POUNDS)	DIAMETER	DEPTH	CU YD	CU YD TOTAL	REINF.	REINF. POUND
RB-GM-100	LODGING	Specific	12.5	5.5	8.0	13.5	15.0	W6X15	15	2	2.50	5.00	503	2.0	6.0	0.70	1.40	78	156
RB-GM-101	FOOD	Specific	14.0	5.5	8.0	13.5	15.0	W6X15	15	2	2.50	5.00	503	2.0	6.0	0.70	1.40	78	156
RB-GM-102	GAS	Specific	14.0	5.5	8.0	13.5	15.0	W6X15	15	2	2.50	5.00	503	2.0	6.0	0.70	1.40	78	156
RB-GM-113	I 55 SOUTH	Destination	N/A	N/A	N/A	N/A	N/A	N/A	N/A	N/A	N/A	N/A	N/A	2.0	6.0	0.70	1.40	78	156
RD-GM-200	FOOD	Specific	14.0	5.5	8.0	13.5	13.5	W6X15	15	2	2.50	5.00	480	2.0	6.0	0.70	1.40	78	156
RD-GM-201	GAS	Specific	14.0	5.5	8.0	13.5	13.5	W6X15	15	2	2.50	5.00	480	2.0	6.0	0.70	1.40	78	156
TOTAL						139.5							2468				8.4		936

FILE NAME = S:\JOL\6328--6399\6246\855\Micros\CADD Sheets\60W13-sht-sign-sched.dgn

STRAND ASSOCIATES®
1170 SOUTH HOUBOLT ROAD
JOLIET, ILLINOIS 60431
(815) 744-4200

USER NAME = dennisw	DESIGNED - JLB	REVISED -	
MODEL NAME = Defaults	DRAWN - DJW	REVISED -	
PLOT SCALE = 100.0000 ' / in.	CHECKED - BMA	REVISED -	
PLOT DATE = 12/30/2013	DATE - 12/17/13	REVISED -	

STATE OF ILLINOIS
DEPARTMENT OF TRANSPORTATION

SIGN SCHEDULES

SCALE: | SHEET OF SHEETS | STA. TO STA.

F.A.P. RTE.	SECTION	COUNTY	TOTAL SHEETS	SHEET NO.
575	14-N	WILL	163	58

CONTRACT NO. 60W13

ILLINOIS FED. AID PROJECT

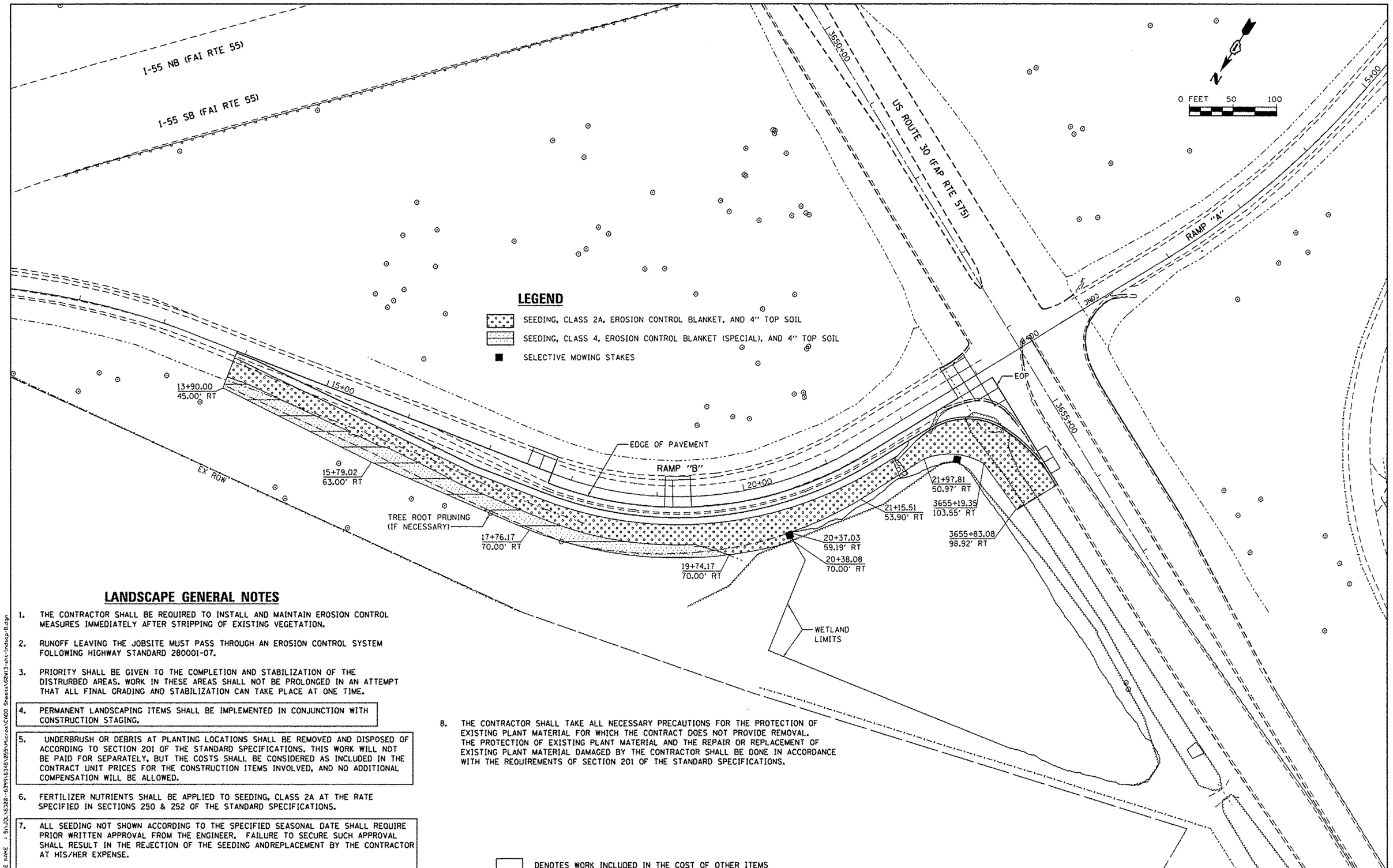

LEGEND

- SEEDING, CLASS 2A, EROSION CONTROL BLANKET, AND 4" TOP SOIL
- SEEDING, CLASS 4, EROSION CONTROL BLANKET (SPECIAL), AND 4" TOP SOIL
- SELECTIVE MOWING STAKES

LANDSCAPE GENERAL NOTES

1. THE CONTRACTOR SHALL BE REQUIRED TO INSTALL AND MAINTAIN EROSION CONTROL MEASURES IMMEDIATELY AFTER STRIPPING OF EXISTING VEGETATION.
2. RUNOFF LEAVING THE JOBSITE MUST PASS THROUGH AN EROSION CONTROL SYSTEM FOLLOWING HIGHWAY STANDARD 280001-07.
3. PRIORITY SHALL BE GIVEN TO THE COMPLETION AND STABILIZATION OF THE DISTRURBED AREAS. WORK IN THESE AREAS SHALL NOT BE PROLONGED IN AN ATTEMPT THAT ALL FINAL GRADING AND STABILIZATION CAN TAKE PLACE AT ONE TIME.
4. PERMANENT LANDSCAPING ITEMS SHALL BE IMPLEMENTED IN CONJUNCTION WITH CONSTRUCTION STAGING.
5. UNDERBRUSH OR DEBRIS AT PLANTING LOCATIONS SHALL BE REMOVED AND DISPOSED OF ACCORDING TO SECTION 201 OF THE STANDARD SPECIFICATIONS. THIS WORK WILL NOT BE PAID FOR SEPARATELY, BUT THE COSTS SHALL BE CONSIDERED AS INCLUDED IN THE CONTRACT UNIT PRICES FOR THE CONSTRUCTION ITEMS INVOLVED, AND NO ADDITIONAL COMPENSATION WILL BE ALLOWED.
6. FERTILIZER NUTRIENTS SHALL BE APPLIED TO SEEDING, CLASS 2A AT THE RATE SPECIFIED IN SECTIONS 250 & 252 OF THE STANDARD SPECIFICATIONS.
7. ALL SEEDING NOT SHOWN ACCORDING TO THE SPECIFIED SEASONAL DATE SHALL REQUIRE PRIOR WRITTEN APPROVAL FROM THE ENGINEER. FAILURE TO SECURE SUCH APPROVAL SHALL RESULT IN THE REJECTION OF THE SEEDING ANDREPLACEMENT BY THE CONTRACTOR AT HIS/HER EXPENSE.
8. THE CONTRACTOR SHALL TAKE ALL NECESSARY PRECAUTIONS FOR THE PROTECTION OF EXISTING PLANT MATERIAL FOR WHICH THE CONTRACT DOES NOT PROVIDE REMOVAL. THE PROTECTION OF EXISTING PLANT MATERIAL AND THE REPAIR OR REPLACEMENT OF EXISTING PLANT MATERIAL DAMAGED BY THE CONTRACTOR SHALL BE DONE IN ACCORDANCE WITH THE REQUIREMENTS OF SECTION 201 OF THE STANDARD SPECIFICATIONS.

DENOTES WORK INCLUDED IN THE COST OF OTHER ITEMS

FILE NAME = S:\JOL\6328-6399\6396\695\Micro\CADD Sheets\60W13-ant-lndscp-B.dgn

STRAND ASSOCIATES®
1170 SOUTH HOUBOLT ROAD
JOLIET, ILLINOIS 60431
(815) 744-4200

USER NAME = dennisw	DESIGNED - JLB	REVISED -	
MODEL NAME = Default	DRAWN - DJW	REVISED -	
PLOT SCALE = 100.0000 ' / in.	CHECKED - BMA	REVISED -	
PLOT DATE = 12/18/2013	DATE - 12/17/13	REVISED -	

STATE OF ILLINOIS
DEPARTMENT OF TRANSPORTATION

LANDSCAPING PLAN
RAMP "B"

SCALE: SHEET OF SHEETS STA. TO STA.

F.A.P. RTE.	SECTION	COUNTY	TOTAL SHEETS	SHEET NO.
575	14-N	WILL	163	59
		CONTRACT NO. 60W13		

ILLINOIS FED. AID PROJECT

I-55 NB (FAI RTE 55)

N

0 FEET 50 100

LEGEND

SEEDING, CLASS 2A, EROSION CONTROL BLANKET, AND 4" TOP SOIL

SEEDING, CLASS 4, EROSION CONTROL BLANKET (SPECIAL), AND 4" TOP SOIL

WETLANDS LIMITS

WETLANDS LIMITS

15+00

PARK & RIDE

US ROUTE 30 (FAP RTE 575)

T 3645+00

3644+18.72
80.00' RT

GRADING LIMITS

17+62.76
70.00' RT

RAMP "D"

20+00

EDGE OF PAVEMENT (EOP)

3642+20.00
80.00' RT

RAMP "C"

15+00

0+00

EOP

20+00.00
71.00' RT

20+42.21
68.00' RT

21+87.57
68.00' RT

22+50.00
68.00' RT

23+77.83
68.00' RT

24+08.29
81.35' RT

3640+91.20
59.08' LT

3640+85.81
59.00' LT

EX ROW (TYP)

T 3640+00

FILE NAME = S:\JOB\6320-6399\6345\6955\Micros\CADD Sheets\60W13-sht-landscp-D.dgn

STRAND ASSOCIATES® 1170 SOUTH HOUBOLT ROAD JOLIET, ILLINOIS 60431 (815) 744-4200	USER NAME = dennisw	DESIGNED - JLB	REVISED -	STATE OF ILLINOIS DEPARTMENT OF TRANSPORTATION	LANDSCAPING PLAN RAMP "D"	F.A.P. RTE.	SECTION	COUNTY	TOTAL SHEETS / SHEET NO.
	MODEL NAME = Default	DRAWN - DJW	REVISED -			575	14-N	WILL	163 / 60
	PLOT SCALE = 100.0000 ' / in.	CHECKED - BMA	REVISED -					CONTRACT NO. 60W13	
	PLOT DATE = 12/18/2013	DATE - 12/17/13	REVISED -		SCALE: SHEET OF SHEETS STA. TO STA.		ILLINOIS FED. AID PROJECT		

LOOP DETECTOR NOTES

1. EACH PAIR OF LOOP WIRES SHALL BE PLACED IN A SEPARATE EMPTY COILABLE NONMETALLIC CONDUIT FROM THE EDGE OF PAVEMENT TO THE HANDHOLE. SPACING BETWEEN THE HOLES DRILLED IN THE PAVEMENT SHALL NOT BE LESS THAN 6" (150 mm). EMPTY COILABLE NONMETALLIC CONDUIT SHALL BE INCLUDED IN THE COST OF THE LOOP WIRE.

2. THE NUMBER OF LOOP TURNS SHALL BE AS RECOMMENDED BY THE AMPLIFIER MANUFACTURER. ALL ADJACENT SIDES OF THE LOOPS SHALL BE INSTALLED IN SUCH A WAY THAT THE CURRENT FLOW IS IN THE SAME DIRECTION TO REINFORCE ITS MAGNETIC FIELDS FOR SMALL VEHICLE DETECTION.

3. EACH LOOP LEAD-IN SHALL BE IDENTIFIED AND PERMANENTLY TAGGED IN THE HANDHOLE. EACH LEAD-IN CABLE TAG SHALL INDICATE THE LOCATION OF THE LOOP, LOOP ROTATION (CLOCKWISE/COUNTERCLOCKWISE), LOOP LEAD-IN DIRECTION (IN OR OUT), LOOP CABLE NUMBER AND LOCATION IN CABINET, AND NUMBER OF TURNS IN THE DETECTOR LOOPS IN WATER PROOF INK AS INDICATED ON THE DISTRICT 1 STANDARD TRAFFIC SIGNAL DESIGN DETAIL. THE CONTRACTOR SHALL MARK LOOP LOCATIONS ON RECORD DRAWINGS AND PRESENT TO THE ENGINEER AFTER FINAL INSPECTION. LOOPS SHALL BE MARKED BY LANE AND LOOP NUMBER. SEE DETAIL BELOW.

4. ALL LOOP CABLE SHALL BE FASTENED WITH PLASTIC TIE WRAP TO THE HANDHOLE HOOKS.

5. IN ASPHALT PAVEMENT, LOOPS SHOULD BE PLACED IN THE BINDER AND DIVEHOLES MARKED AT THE CURB WITH A SAW-CUT. THE SAW-CUT SHALL BE CUT IN ACCORDANCE WITH LOCAL AND E.P.A. DUST CONTROL REQUIREMENTS. DETECTOR LOOP(S) SHALL NOT BE INSTALLED IN WET CONDITIONS AND THE SAW-CUTS MUST BE FREE OF DEBRIS AND RESIDUE SUCH AS DUST AND WATER WHICH IS TO BE ACHIEVED BY THE USE OF COMPRESSED AIR, WIRE BRUSHING AND HEAT DRYING ACCORDING TO SEALANT MANUFACTURER REQUIREMENTS. THE DETECTOR WIRE SHALL BE HELD IN PLACE BY THE USE OF FORM WEDGES. WEDGES SHALL BE SPACED NO MORE THAN 18" (450 mm) APART.

6. LOOP SPLICES SHALL BE SOLDERED USING A SOLDERING IRON. BLOW TORCHES OR OTHER DEVICES WHICH OXIDIZE COPPER CABLE SHALL NOT BE ALLOWED FOR SOLDERING OPERATIONS. SEE DETAIL BELOW RIGHT.

7. PREFORMED DETECTOR LOOPS SHALL BE USED, AS SHOWN ON THE PLANS, WHERE NEW CONCRETE PAVEMENT IS PROPOSED. THE INSTALLATION OF PREFORMED LOOPS SHALL BE IN ACCORDANCE WITH THE DISTRICT 1 SPECIFICATIONS OR AS DIRECTED BY THE ENGINEER.

LOOP LEAD-IN CABLE TAG

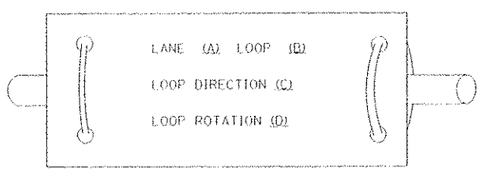

A. LANE 1 IS THE LANE CLOSEST TO THE CENTERLINE OF THE ROADWAY

B. LOOP #1 IS THE LOOP IN THE LANE CLOSEST TO THE INTERSECTION.

C. LABEL LOOP CABLE "IN" OR LOOP CABLE "OUT".

D. LABEL LOOP CABLE CLOCKWISE OR LOOP CABLE COUNTERCLOCKWISE.

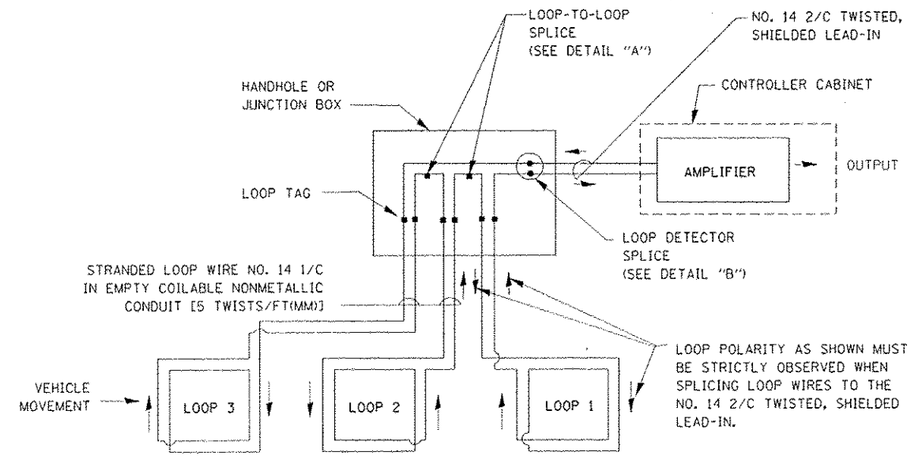

DETECTOR LOOP WIRING SCHEMATIC

- LOOPS SHALL BE SPLICED IN SERIES.
- SAW-CUTS SHALL BE A MINIMUM WIDTH OF 5/16" (8 mm).
- SAW-CUT DEPTHS SHALL BE 3" (75 mm). IF IN CONCRETE, THE SAW-CUT DEPTH SHALL BE TO THE TOP OF THE REINFORCEMENT.
- LOOP CORNERS SHALL BE DRILLED WITH A 2" (50 mm) DIAMETER CORE.

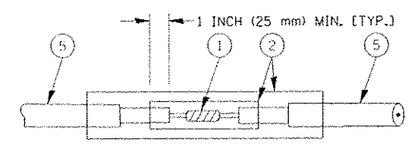

DETAIL "A"
LOOP-TO-LOOP SPLICE

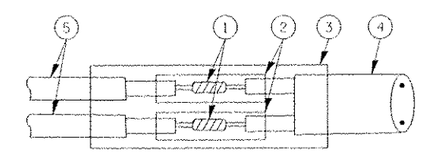

DETAIL "B"
LOOP-TO-CONTROLLER SPLICE

TYPE I LOOP

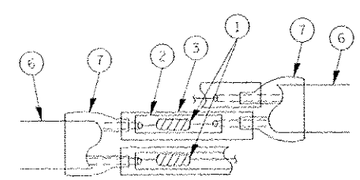

DETAIL "A"
LOOP-TO-LOOP SPLICE

PRE-FORMED LOOP

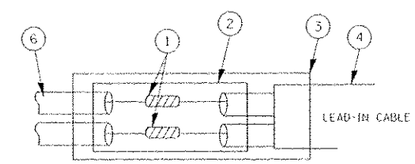

DETAIL "B"
LOOP-TO-CONTROLLER SPLICE

LOOP DETECTOR SPLICE

(1) WESTERN UNION SPLICE SOLDERED WITH ROSIN CORE FLUX. ALL EXPOSED SURFACES OF THE SOLDER SHALL BE SMOOTH.

(2) WCSMW 30/100 HEAT SHRINK TUBE, MINIMUM LENGTH 3" (75 mm), UNDERWATER GRADE.

(3) WCS 200/750 HEAT SHRINK TUBE, MINIMUM LENGHT 6" (150 mm), UNDERWATER GRADE.

(4) NO. 14 2/C TWISTED, SHIELDED CABLE.

(5) LOOP CONDUCTOR WITH FLEXIBLE PLASTIC TUBE.

(6) PRE-FORMED LOOP

(7) XL POLYOLEFIN 2 CONDUCTOR BREAKOUT SEALS, TYCO CBR-2 OR APPROVED EQUAL

FILE NAME	USER NAME	DESIGNED DAD	REVISED	STATE OF ILLINOIS DEPARTMENT OF TRANSPORTATION	DISTRICT ONE STANDARD TRAFFIC SIGNAL DESIGN DETAILS	F.A.P. RTE.	SECTION	COUNTY	TOTAL SHEETS	SHEET NO.
		DRAWN BCK	REVISED			575	14-N	WILL	163	61
	PLOT SCALE	CHECKED DAD	REVISED					CONTRACT NO. 60W13		
	PLOT DATE	DATE 10/28/09	REVISED		SCALE: SHEET NO. 1 OF 6 SHEETS STA. TO STA.	FED. ROAD DIST. NO. 1	ILLINOIS	FED. AID PROJECT		

TRAFFIC SIGNAL MAST ARM AND SIGNAL POST

MAST ARM MOUNTED SIGNALS IN EXISTING, PROPOSED OR FUTURE SIDEWALK/BICYCLE PATH AREA. INTERSECTION SHOWN WITH PEDESTRIAN SIGNALS AND PEDESTRIAN PUSHBUTTON DETECTORS.

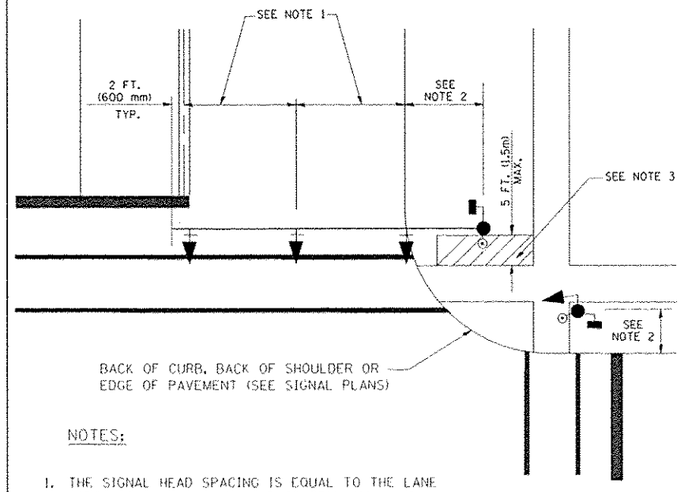

NOTES:

1. THE SIGNAL HEAD SPACING IS EQUAL TO THE LANE WIDTH OR AS SHOWN ON THE TRAFFIC SIGNAL PLAN.
2. REFER TO THE TRAFFIC SIGNAL EQUIPMENT OFFSET TABLE.
3. PROVIDE A LEVEL ALL-WEATHER SURFACE (CONCRETE SIDEWALK, ASPHALT BICYCLE PATH SURFACE OR MATCHING MATERIAL TO THE ADJACENT SURFACE) UP TO THE MAST ARM SHAFT OR THE SIGNAL POST.
4. THE FACE OF THE PEDESTRIAN PUSHBUTTON SHALL BE PARALLEL TO THE CROSSWALK TO BE USED.
5. THE LOCATIONS AND INSTALLATION OF PEDESTRIAN SIGNAL HEADS AND PEDESTRIAN PUSHBUTTONS SHALL MEET THE REQUIREMENTS OF THE MUTCD AND INFORMATION FOUND IN THE "AMERICANS WITH DISABILITIES ACT ACCESSIBILITY GUIDELINES FOR BUILDINGS AND FACILITIES."

PEDESTRIAN SIGNAL POST AND PEDESTRIAN PUSH BUTTON POST

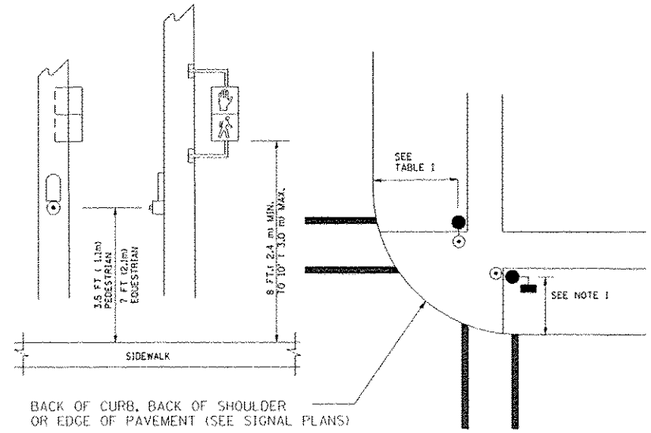

NOTES:

1. REFER TO THE TRAFFIC SIGNAL EQUIPMENT OFFSET TABLE.
2. PROVIDE A LEVEL ALL-WEATHER SURFACE (CONCRETE SIDEWALK, ASPHALT BICYCLE PATH SURFACE OR MATCHING MATERIAL TO THE ADJACENT SURFACE) UP TO THE PEDESTRIAN SIGNAL POST OR THE PEDESTRIAN PUSH BUTTON POST.
3. THE FACE OF THE PEDESTRIAN PUSHBUTTON SHALL BE PARALLEL TO THE CROSSWALK TO BE USED.
4. THE LOCATIONS AND INSTALLATION OF PEDESTRIAN SIGNAL HEADS AND PEDESTRIAN PUSHBUTTONS SHALL MEET THE REQUIREMENTS OF THE MUTCD AND INFORMATION FOUND IN THE "AMERICANS WITH DISABILITIES ACT ACCESSIBILITY GUIDELINES FOR BUILDINGS AND FACILITIES."

RECOMMENDED PUSHBUTTON LOCATIONS

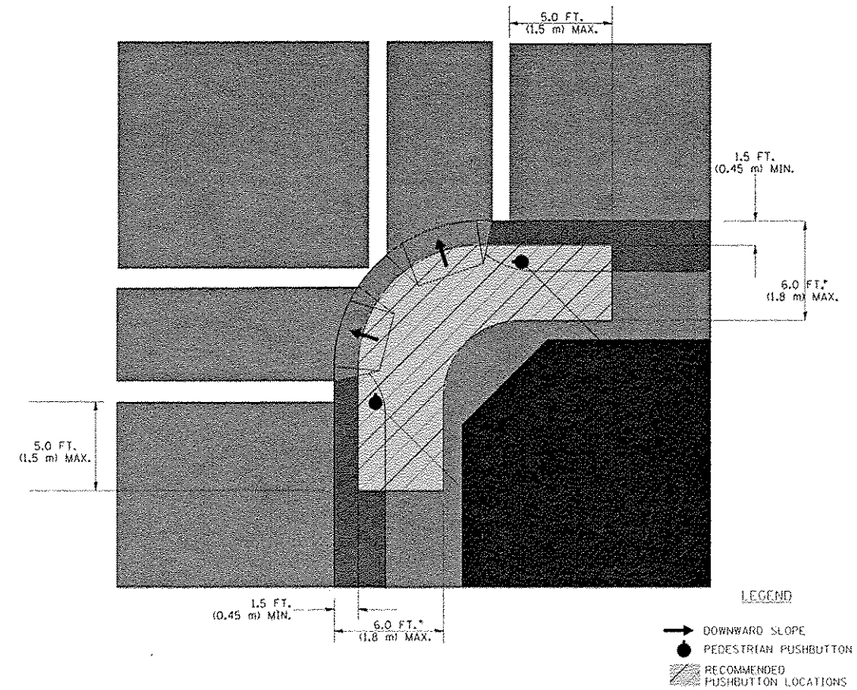

* WHERE THERE ARE CONSTRAINTS THAT MAKE IT IMPRACTICAL TO PLACE THE PEDESTRIAN PUSHBUTTON BETWEEN 1.5 FT (0.45 m) AND 6 FT (1.8 m) FROM THE EDGE OF THE CURB, SHOULDER, OR PAVEMENT, IT SHOULD NOT BE FURTHER THAN 10 FT (3 m) FROM THE EDGE OF CURB, SHOULDER, OR PAVEMENT.

** WHERE THERE ARE CONSTRAINTS ON A PARTICULAR CORNER THAT MAKE IT IMPRACTICAL TO PROVIDE THE 10 FT (3 m) SEPERATION BETWEEN THE TWO PEDESTRIAN PUSHBUTTONS, THE PUSHBUTTONS MAY BE PLACED CLOSER TOGETHER OR ON THE SAME POLE.

NOTES:

1. PEDESTRIAN SIGNAL HEADS SHALL BE MOUNTED WITH THE BOTTOM OF THE SIGNAL HOUSING INCLUDING BRACKETS NOT LESS THAN 8 FT (2.4 m) OR MORE THAN 10 FT (3 m) ABOVE SIDEWALK LEVEL, AND SHALL BE POSITIONED AND ADJUSTED TO PROVIDE MAXIMUM VISIBILITY AT THE BEGINNING OF THE CONTROLLED CROSSWALK.
2. THE BOTTOM OF THE SIGNAL HOUSING (INCLUDING BRACKETS) OF A VEHICULAR SIGNAL FACE THAT IS NOT LOCATED OVER A HIGHWAY SHALL BE AT LEAST 8 FT (2.4 m) BUT NOT MORE THAN 19 FT (5.8 m) ABOVE THE SIDEWALK OR, IF THERE IS NO SIDEWALK, ABOVE THE PAVEMENT GRADE AT THE CENTER OF THE ROADWAY.
3. THE BOTTOM OF THE SIGNAL HOUSING AND ANY RELATED ATTACHMENTS TO A SIGNAL FACE LOCATED OVER ANY PORTION OF A HIGHWAY SHALL BE ACCORDING TO CURRENT STATE STANDARDS 877001, 877002, 877006, 877011 AND 877012 WITH A MINIMUM OF 16 FT (5.0 m) AND A MAXIMUM OF 18 FT. (5.5 m) FROM THE HIGHEST POINT OF PAVEMENT.
4. THE BOTTOM OF THE TEMPORARY SPAN WIRE MOUNTED SIGNAL HOUSING AND ANY RELATED ATTACHMENTS TO A SIGNAL FACE LOCATED OVER ANY PORTION OF A HIGHWAY SHALL BE ACCORDING TO CURRENT STATE STANDARD 880001 WITH A MINIMUM OF 17 FT (5.18 m) FROM THE HIGHEST POINT OF PAVEMENT.
5. THE TOP OF THE SIGNAL HOUSING OF A SIGNAL FACE LOCATED OVER ANY PORTION OF A HIGHWAY SHALL NOT BE MORE THAN 25.6 FT (7.8 m) ABOVE THE PAVEMENT.

TRAFFIC SIGNAL EQUIPMENT OFFSET

TRAFFIC SIGNAL EQUIPMENT	COMBINATION CONCRETE CURB AND GUTTER (MINIMUM DISTANCE FROM BACK OF CURB TO CENTERLINE OF FOUNDATION)	SHOULDER/NON-CURBED AREA (MINIMUM DISTANCE FROM EDGE OF PAVEMENT TO CENTERLINE OF FOUNDATION)
TRAFFIC SIGNAL MAST ARM POLE	6 FT (1.8m)	SHOULDER WIDTH + 2 FT (0.6m), MINIMUM 10 FT (3.0m)
TRAFFIC SIGNAL POST	4 FT (1.2m)	SHOULDER WIDTH + 2 FT (0.6m), MINIMUM 10 FT (3.0m)
PEDESTRIAN SIGNAL POST	4 FT (1.2m)	SHOULDER WIDTH + 2 FT (0.6m), MINIMUM 10 FT (3.0m)
PEDESTRIAN PUSHBUTTON POST	4 FT (1.2m)	SHOULDER WIDTH + 2 FT (0.6m), MINIMUM 10 FT (3.0m)
TEMPORARY WOOD POLE	6 FT (1.8m)	SHOULDER WIDTH + 2 FT (0.6m), MINIMUM 10 FT (3.0m)
CONTROLLER CABINET	6 FT (1.8m) MINIMUM DISTANCE SEE NOTE 2	SHOULDER WIDTH + 6 FT (1.8m), MINIMUM 16 FT (4.9m) SEE NOTE 3.
SERVICE INSTALLATION, GROUND MOUNT	6 FT (1.8m) MINIMUM DISTANCE SEE NOTE 2	SHOULDER WIDTH + 6 FT (1.8m), MINIMUM 16 FT (4.9m) SEE NOTE 3.

NOTES:

1. CONTACT THE "AREA TRAFFIC SIGNAL MAINTENANCE AND OPERATIONS ENGINEER" FOR ASSISTANCE IN LOCATING THE TRAFFIC SIGNAL EQUIPMENT WHEN THERE ARE CONFLICTS WITH DITCHES OR THE MINIMUM OFFSET DISTANCES CANNOT BE MET.
2. MINIMUM DISTANCE FROM THE BACK OF CURB TO THE ROADWAY SIDE OF THE FOUNDATION.
3. MINIMUM DISTANCE FROM THE EDGE OF PAVEMENT TO THE ROADWAY SIDE OF THE FOUNDATION.
4. ANY CHANGES TO THE OFFSETS OF THE FOUNDATIONS, FROM THE MINIMUM DISTANCES LISTED IN THE "TRAFFIC SIGNAL EQUIPMENT OFFSET" CHART AND THE TRAFFIC SIGNAL INSTALLATION PLAN, COULD EFFECT THE PLACEMENT OF THE SIGNAL HEADS, PEDESTRIAN SIGNAL HEADS AND THE PEDESTRIAN PUSHBUTTONS. THE SIGNAL HEAD PLACEMENT ON THE MAST ARMS SHALL REMAIN AS PER THE TRAFFIC SIGNAL INSTALLATION PLAN AND THE "TRAFFIC SIGNAL MAST ARM AND SIGNAL POST" DETAIL ABOVE. THE PROPOSED MAST ARM LENGTHS MAY NEED TO BE REVISED TO MEET THE ABOVE REQUIREMENTS. THE PEDESTRIAN SIGNAL HEADS AND PEDESTRIAN PUSHBUTTONS MUST MEET THE REQUIREMENTS UNDER THE DETAILS ON THIS SHEET.

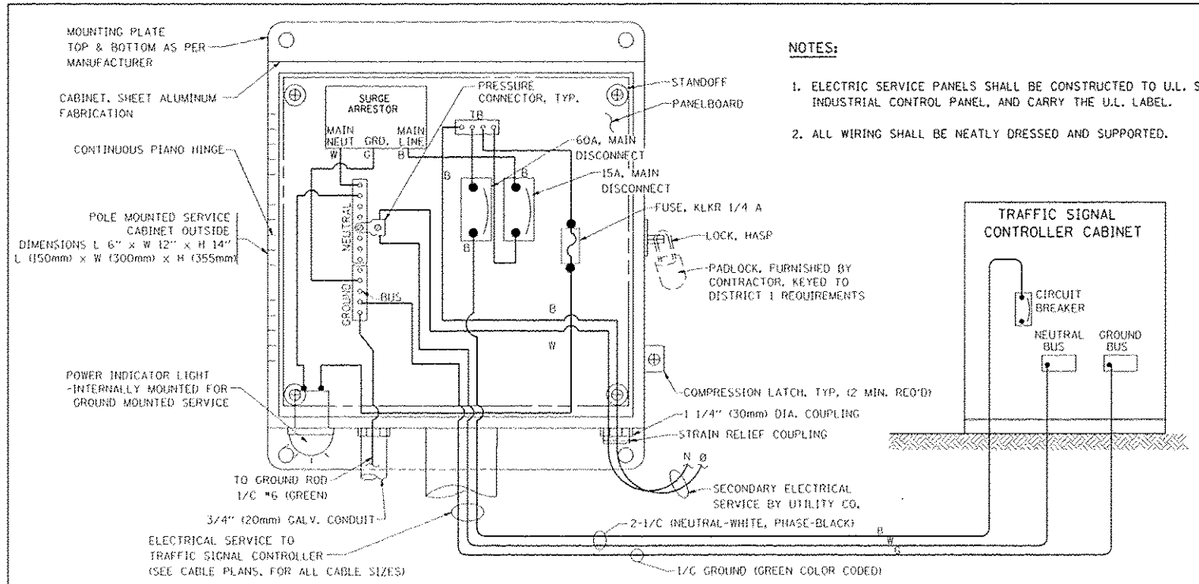

NOTES:

1. ELECTRIC SERVICE PANELS SHALL BE CONSTRUCTED TO U.L. STD 508, INDUSTRIAL CONTROL PANEL, AND CARRY THE U.L. LABEL.
2. ALL WIRING SHALL BE NEATLY DRESSED AND SUPPORTED.

ELECTRICAL SERVICE – PANEL DIAGRAM (TYPICAL FOR POLE AND GROUND MOUNTED SERVICE)

SERVICE INSTALLATION POLE MOUNT (SHOWN)

(NOT TO SCALE)

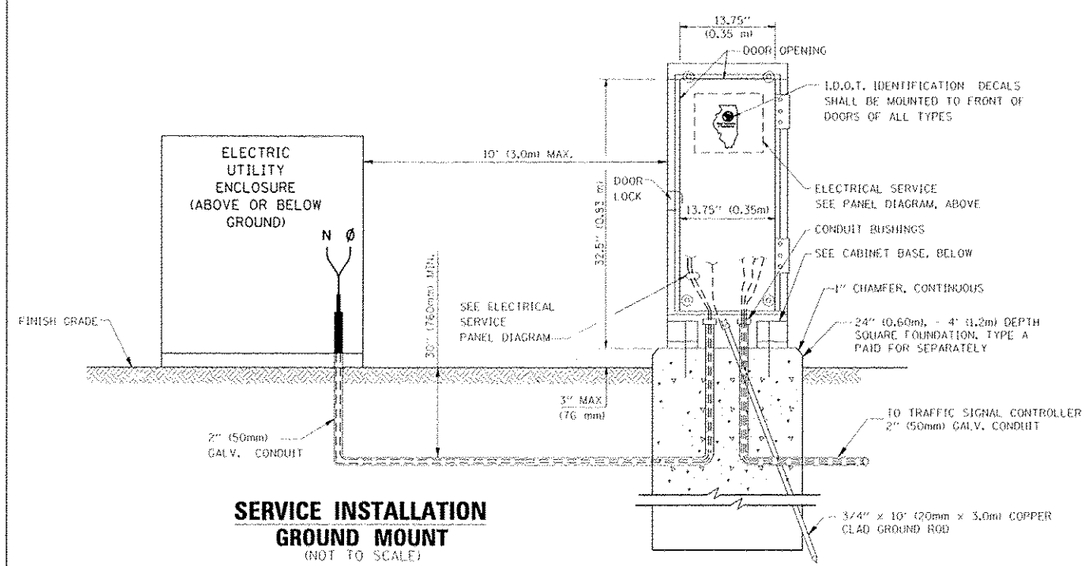

SERVICE INSTALLATION GROUND MOUNT

(NOT TO SCALE)

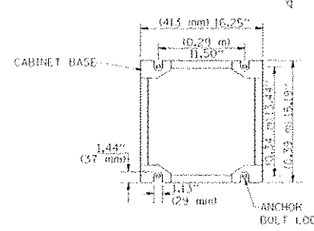

CABINET – BASE BOLT PATTERN

(NOT TO SCALE)

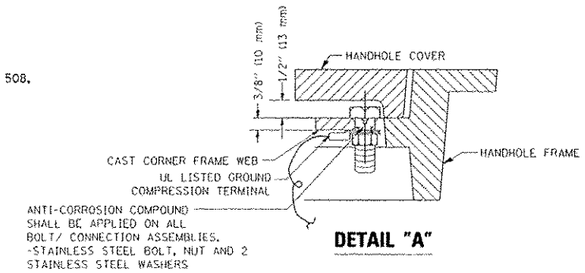

DETAIL "A"

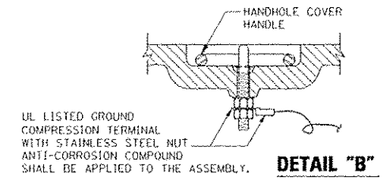

DETAIL "B"

NOTES:

GROUNDING SYSTEM

1. THE GROUNDING SYSTEM SHALL CONSIST OF AN INSULATED CONDUCTOR TYPE XLP, NO. 6 A.W.G., STRANDED COPPER TO BE INSTALLED IN RACEWAYS. THE GROUNDING CABLE SHALL BE INSTALLED IN A CONTINUOUS MANNER AS SHOWN ON THE CABLE PLAN PROVIDED. ALL GROUNDING CONDUCTORS SHALL BE BONDED TO METAL ENCLOSURE (HANDHOLE, POST, MAST ARM, CONTROLLER, ETC.). GROUND ROD SHALL BE 3/4" DIA. x 10'-0" (20mm x 3.0m) LONG, COPPER CLAD. ONE GROUND ROD SHALL BE INSTALLED AT ALL POST FOUNDATIONS, POLE FOUNDATIONS, CONTROLLER CABINET FOUNDATION AND ELECTRICAL SERVICE INSTALLATION AS INDICATED ON THE CABLE PLAN. IF THERE ARE ANY SPECIAL CONDITIONS SUCH AS SUB-SURFACE CONDITIONS OR INSTALLATION PROBLEMS, THE RESIDENT ENGINEER SHALL BE NOTIFIED OR CONTACT THE BUREAU OF TRAFFIC, ILLINOIS DEPARTMENT OF TRANSPORTATION DISTRICT ONE AT (847) 705-4139.
2. THE NEUTRAL CONDUCTOR AND THE GROUND CONDUCTOR SHALL BE CONNECTED IN THE SERVICE INSTALLATION. AT NO OTHER POINT IN THE TRAFFIC SIGNAL SYSTEM SHALL THE NEUTRAL AND GROUND CONDUCTORS BE CONNECTED.
3. ALL EQUIPMENT GROUNDING CONDUCTORS SHALL TERMINATE AT THE GROUND BUS IN THE CONTROLLER CABINET.
4. THE CONTRACTOR SHALL PROVIDE A GROUND CABLE WITH CONNECTORS BETWEEN THE HANDHOLE COVER AND HANDHOLE FRAME.

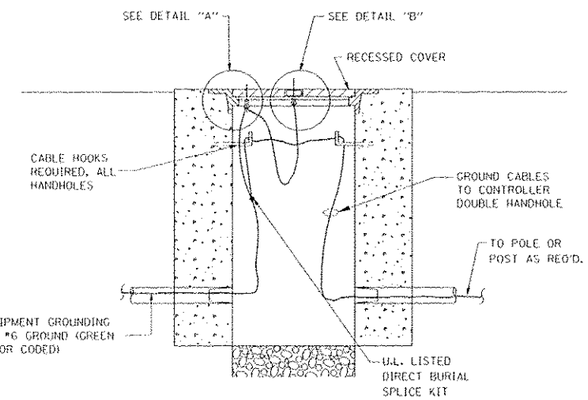

HANDHOLE COVER & FRAME – GROUNDING DETAIL

(NOT TO SCALE)

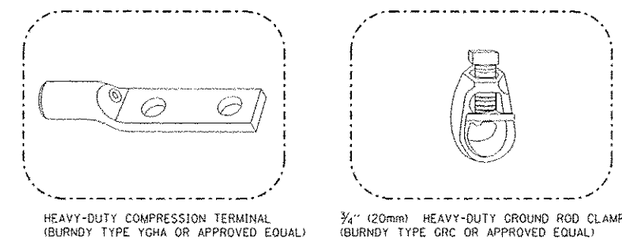

NOTES:

- ALL CLAMPS SHALL BE BRONZE OR COPPER, UL APPROVED.
- GROUND CABLE SHALL BE LOOPED OVER HOOKS IN THE HANDHOLES
  6.5' (2.0m) SLACK SHALL BE PROVIDED IN SINGLE HANDHOLES
  13' (4.0m) OF SLACK SHALL BE PROVIDED IN DOUBLE HANDHOLES.
  5' (1.4m) OF SLACK SHALL BE PROVIDED BETWEEN FRAME AND COVER.

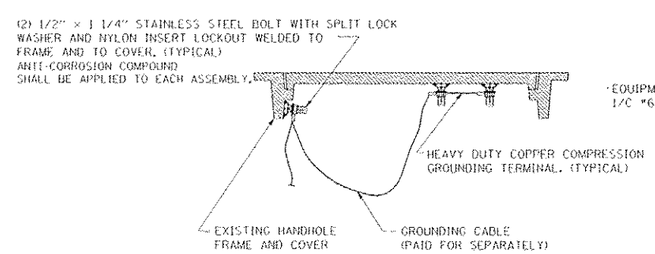

EXISTING HANDHOLE COVER & FRAME – GROUNDING DETAIL

(NOT TO SCALE)

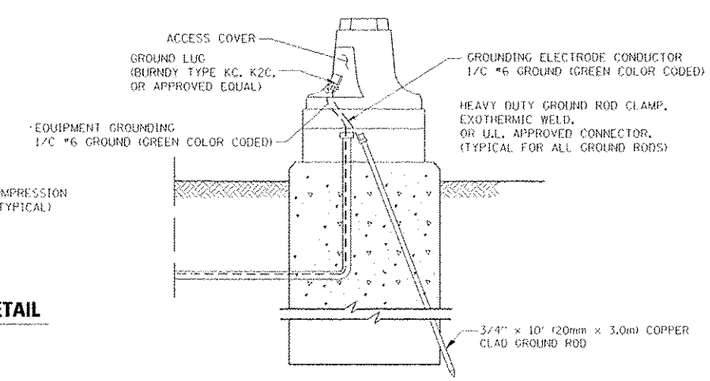

MAST ARM POLE / POST–GROUNDING DETAIL

(NOT TO SCALE)

FILE NAME	USER NAME	DESIGNED - DAD	REVISED
		DRAWN - BCK	REVISED
	PLOT SCALE	CHECKED - DAD	REVISED
	PLOT DATE	DATE - 10/28/09	REVISED

STATE OF ILLINOIS
DEPARTMENT OF TRANSPORTATION

DISTRICT 1
STANDARD TRAFFIC SIGNAL DESIGN DETAILS

SCALE: | SHEET NO. 3 OF 6 SHEETS | STA. | TO STA.

F.A.P. RTE.	SECTION	COUNTY	TOTAL SHEETS	SHEET NO.
575	14-N	WILL	163	63
		CONTRACT NO. 60W13		

FED. ROAD DIST. NO. 1 | ILLINOIS | FED. AID PROJECT

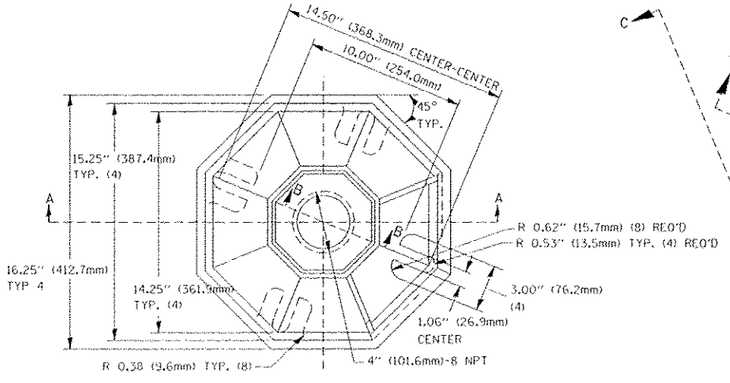

TOP VIEW

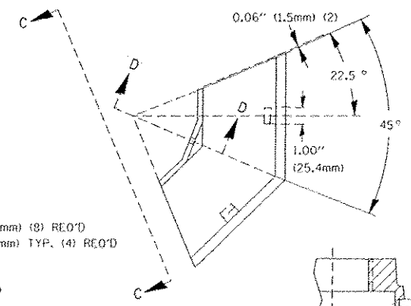

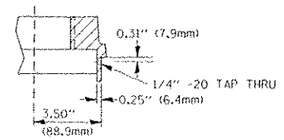

SECTION B-B

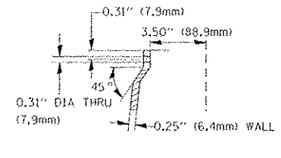

SECTION D-D

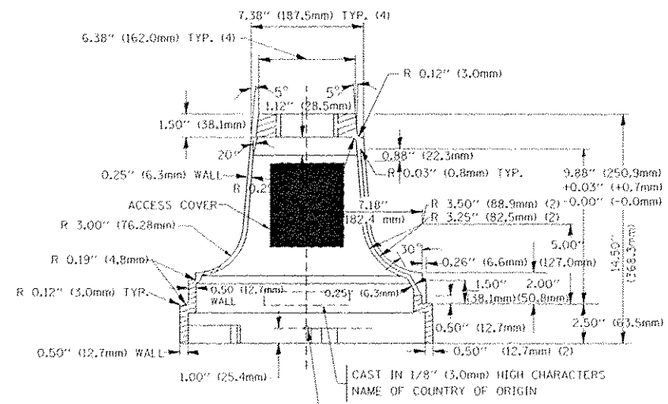

SECTION A-A

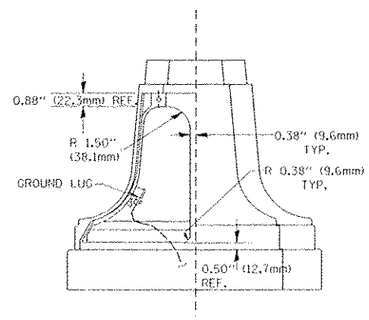

VIEW C-C

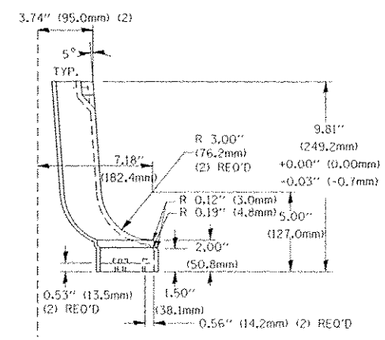

TRAFFIC SIGNAL POST - MOUNTING BASE - TYPE A

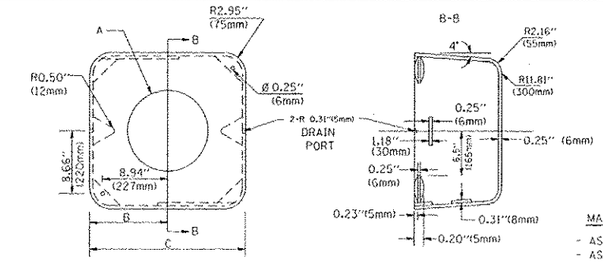

MATERIAL:
- ASTM A36 STEEL
- ASTM A-123 HOT DIPPED GALVANIZED

A	B	C	HEIGHT	WEIGHT
VARIES	9.5" (241mm)	19" (483mm)	7" (178mm) - 12" (300mm)	53 lbs (24kg)
VARIES	10.75" (273mm)	21.5" (546mm)	7" (178mm) - 12" (300mm)	68 lbs (31 kg)
VARIES	13.0" (330mm)	26" (660mm)	7" (178mm) - 12" (300mm)	81 lbs (37 kg)
VARIES	18.5" (470mm)	37" (940mm)	7" (178mm) - 12" (300mm)	126 lbs (57 kg)

SHROUD

NOTES:

1. DIMENSION "A" IS EQUAL TO THE DIAMETER OF THE MAST ARM POLE AT THE TOP OF THE SHROUD. THE SHROUD SHALL BE TIGHT TO THE MAST ARM POLE.
2. THE SUPPLIER SHALL VERIFIED THE ABOVE DIMENSIONS BASED ON MAST ARM REQUIREMENTS.
3. THE HEIGHT OF THE SHROUD SHALL COVER THE ANCHOR BOLTS, NUTS AND MAST ARM POLE BASE.

NOTE:
SUPPORT EXISTING CABINET AND CONTROL EQUIPMENT ABOVE FOUNDATION TO KEEP TRAFFIC SIGNAL FUNCTIONING WHILE FOUNDATION MODIFICATION WORK IS PROCEEDING.

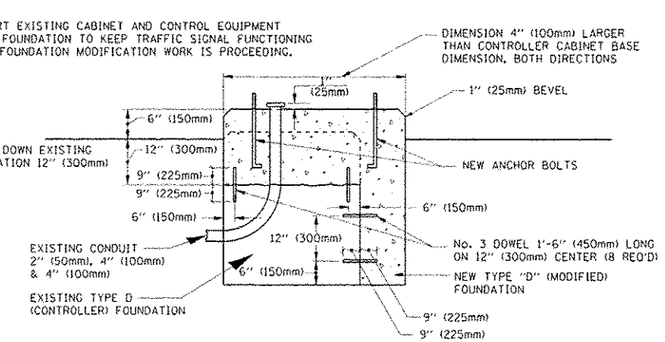

MODIFY EXISTING TYPE "D" FOUNDATION

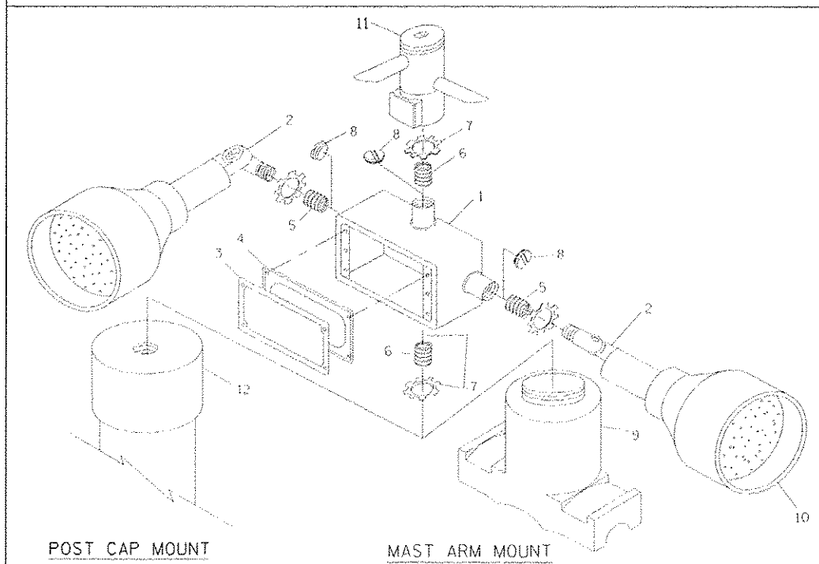

POST CAP MOUNT

MAST ARM MOUNT

ITEM NO.	IDENTIFICATION
1	OUTLET BOX- GALV. 21 CU.IN. (0.000344 CU-M)
2	LAMP HOLDER AND COVER
3	OUTLET BOX COVER
4	RUBBER COVER GASKET
5	REDUCING BUSHING
6	¾"(19 mm) CLOSE NIPPLE
7	¾"(19 mm) LOCKNUT
8	¾"(19 mm) HOLE PLUG
9	SADDLE BRACKET - GALV.
10	6 WATT PAR 38 LED FLOOD LAMP
11	DETECTOR UNIT
12	POST CAP (18 FT. (5.4 m) POST MIN.)

NOTES:

1. ALL ELECTRICAL ITEMS, EXCEPT ITEMS #2 AND #11 SHALL BE ALUMINUM OR GALVANIZED
2. ITEM #1- OZ/GEDNEY FSX-1-50 OR EQUIVALENT
   ITEM #2- MULBERRY CON-O-SHADE LAMP SHIELD OR EQUIVALENT
   ITEM #9- "BAND-IT" SADDLE BRACKET OR EQUIVALENT
3. WHEN POST MOUNTING IS SPECIFIED, ITEM #9 SHALL NOT BE REQUIRED. THE DETECTION UNIT SHALL BE MOUNTED DIRECTLY ON TOP OF THE CAP BY DRILLING AND TAPPING A ¾"(19 mm) HOLE WITH PIPE THREADS. THE POST CAP SHALL EITHER BE SCREWED TO THE TOP OF THE POST OR A MINIMUM OF 3 TIGHTENING SCREWS SHALL BE REQUIRED ON EACH CAP.

EMERGENCY VEHICLE DETECTOR WITH CONFIRMATION BEACON MOUNTING DETAIL

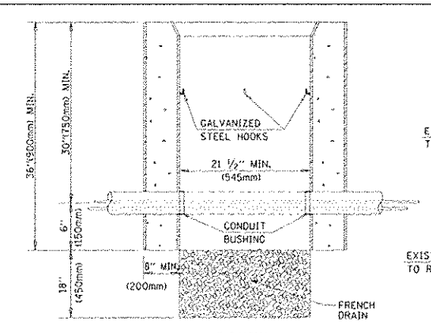

ELEVATION

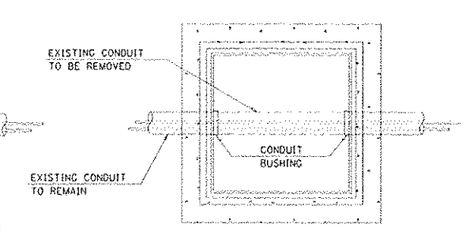

PLAN

NOTES:

1. HANDHOLE CONSTRUCTED PER STATE STANDARD 814001.
2. REMOVAL OF THE EXISTING CONDUIT FROM THE HANDHOLE AND THE INSTALLATION OF THE CONDUIT BUSHINGS SHALL BE INCIDENTAL TO THE HANDHOLE.

HANDHOLE TO INTERCEPT EXISTING CONDUIT

FILE NAME =	USER NAME =	DESIGNED - DAG	REVISED -
		DRAWN - BCK	REVISED -
	PLOT SCALE = 20.0000 ' / IN.	CHECKED - DAD	REVISED -
	PLOT DATE = 10/7/2009	DATE - 10/28/09	REVISED -

STATE OF ILLINOIS
DEPARTMENT OF TRANSPORTATION

DISTRICT 1
STANDARD TRAFFIC SIGNAL DESIGN DETAILS

SCALE: | SHEET NO. 4 OF 6 SHEETS | STA. | TO STA.

F.A.P. RTE.	SECTION	COUNTY	TOTAL SHEETS	SHEET NO.
575	14-N	WILL	163	64
		CONTRACT NO. 60W13		

FED. ROAD DIST. NO. 1 | ILLINOIS | FED. AID PROJECT

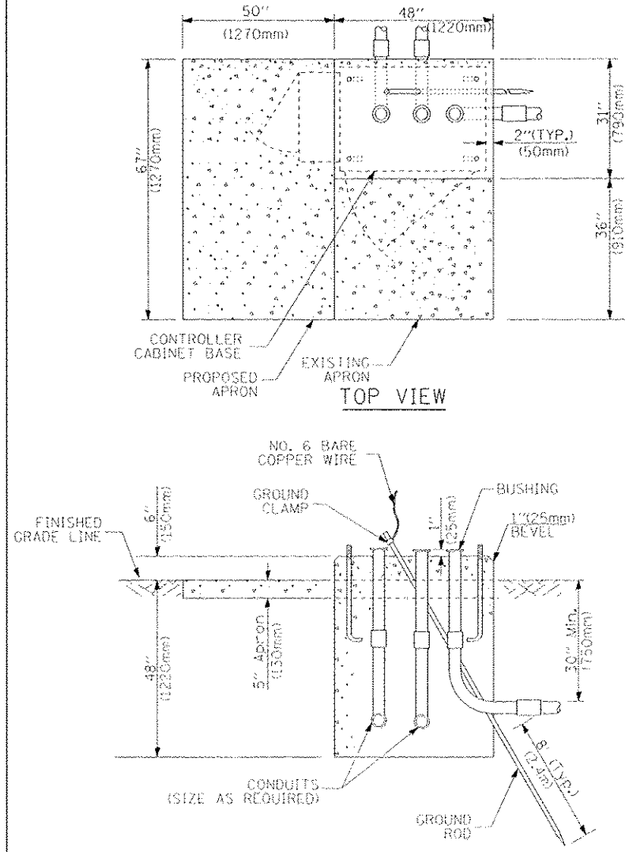

TYPE D
FOR GROUND MOUNTED
CONTROLLER CABINET
AND UPS BATTERY CABINET

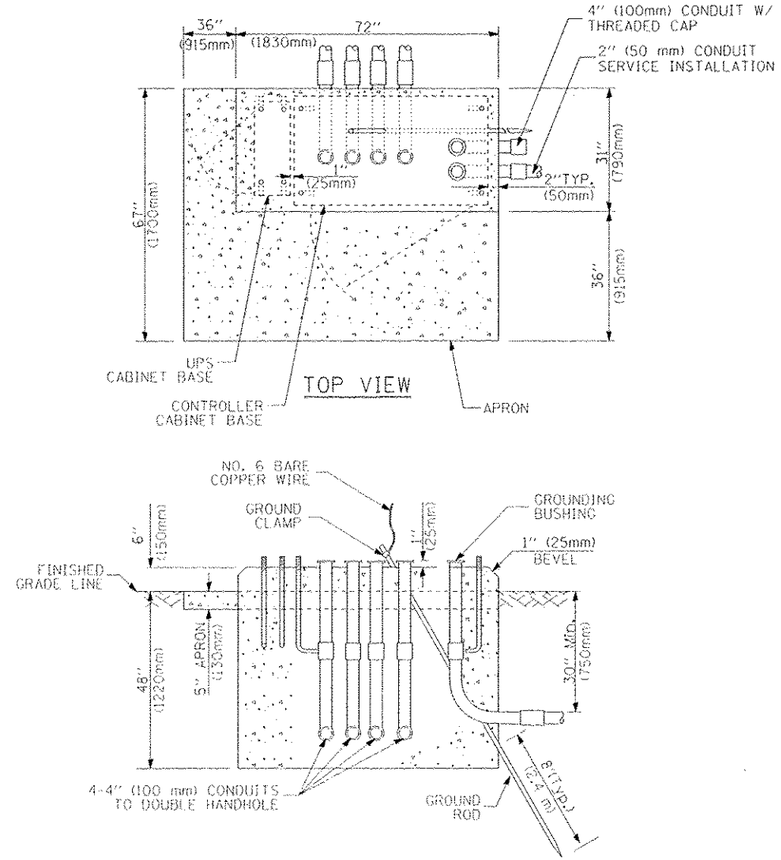

TYPE C
FOR GROUND MOUNTED
CONTROLLER CABINET
AND UPS BATTERY CABINET

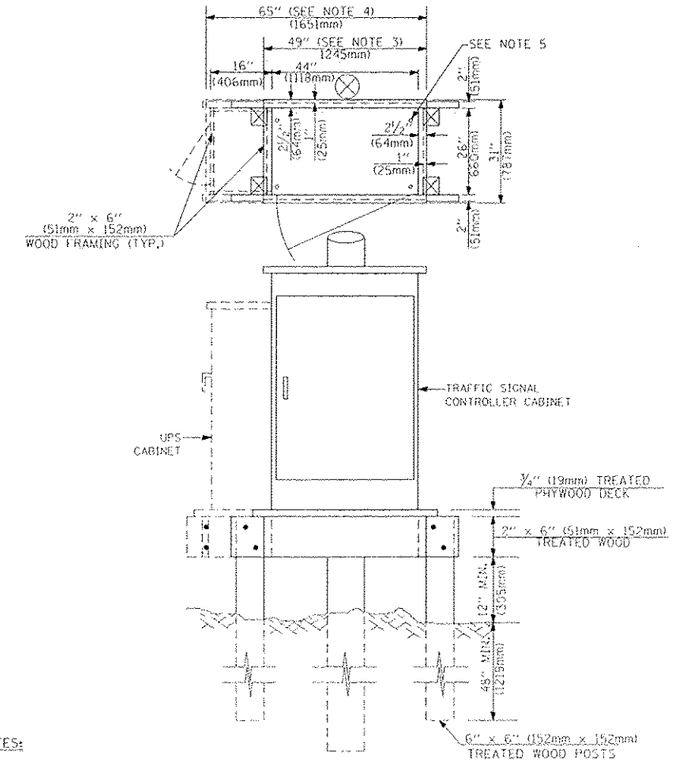

NOTES:

1. BASED ON CONTROLLER CABINET TYPE IV WITH BASE DIMENSIONS OF 26" x 44" (660mm x 1118mm). ADJUST PLATFORM SIZE TO FIT CABINET BASE DIMENSIONS BEING SUPPLIED.
2. BASED ON UNINTERRUPTIBLE POWER SUPPLY CABINET WITH BASE DIMENSIONS OF 16" x 25" (406mm x 635mm). ADJUST PLATFORM SIZE TO FIT CABINET BASE DIMENSIONS BEING SUPPLIED.
3. PLATFORM SIZE FOR CONTROLLER CABINET TYPE IV.
4. PLATFORM SIZE FOR CONTROLLER CABINET TYPE IV AND UNINTERRUPTIBLE POWER SUPPLY CABINET.
5. DRILLED HOLES THROUGH THE PLATFORM BASE TO MATCH THE CONTROLLER CABINET BOLT TEMPLATE. FASTEN THE CONTROLLER CABINET TO THE PLATFORM WITH CARRIAGE BOLTS, WASHERS AND NUTS.
6. FASTEN ALL SUPPORT WOOD FRAMING TO THE WOOD POSTS WITH 2 LAG SCREWS FOR EACH CONNECTION.

TEMPORARY SIGNAL CONTROLLER
WOOD SUPPORT PLATFORM

CABLE SLACK LENGTH	FEET	METER
HANDHOLE	6.5	2.0
DOUBLE HANDHOLE	13.0	4.0
SIGNAL POST	2.0	0.6
MAST ARM	2.0	0.6
CONTROLLER CABINET	1.5	0.5
FIBER OPTIC AT CABINET	13.0	4.0
ELECTRIC SERVICE AT (CABINET OR SERVICE LOCATION)	1.5	0.5
GROUND CABLE (SIGNAL POST, MAST ARM, CABINET)	1.5	0.5
GROUND CABLE (BETWEEN FRAME AND COVER)	5.0	1.6

CABLE SLACK

VERTICAL CABLE LENGTH	FEET	METER
MAST ARM POLE (MAST ARM MOUNTED SIGNAL HEAD) (L = MAST ARM LENGTH - DISTANCE TO SIGNAL HEAD FROM END OF ARM)	20.0+L	6.0+L
BRACKET MOUNTED (MAST ARM POLE OR SIGNAL POLE)	13.0	4.0
PEDESTRIAN PUSH BUTTON	6.0	2.0
SERVICE INSTALLATION POLE MOUNT TO SERVICE DROP	13.5	4.1
SERVICE INSTALLATION POLE MOUNT TO GROUND	13.5	4.1
SERVICE INSTALLATION GROUND MOUNT	6.0	2.0
FOUNDATION (SIGNAL POST, MAST ARM POLE, CONTROLLER CABINET, SERVICE-GROUND MOUNT)	3.0	1.0

VERTICAL CABLE LENGTH

FOUNDATION	DEPTH
TYPE A - Signal Post	4'-0" (1.2m)
TYPE C - CONTROLLER W/ UPS	4'-0" (1.2m)
TYPE D - CONTROLLER	4'-0" (1.2m)
SERVICE INSTALLATION, GROUND MOUNT, TYPE A - SQUARE	4'-0" (1.2m)

DEPTH OF FOUNDATION

Mast Arm Length	① Foundation Depth	Foundation Diameter	Spiral Diameter	Quantity of Rebars	Size of Rebars
Less than 30' (9.1 m)	10'-0" (3.0 m)	30" (750mm)	24" (600mm)	8	6(19)
Greater than or equal to 30' (9.1 m) and less than 40' (12.2 m)	13'-6" (4.1 m)	30" (750mm)	24" (600mm)	8	6(19)
	11'-0" (3.4 m)	36" (900mm)	30" (750mm)	12	7(22)
Greater than or equal to 40' (12.2 m) and less than 50' (15.2 m)	13'-0" (4.0 m)	36" (900mm)	30" (750mm)	12	7(22)
Greater than or equal to 50' (15.2 m) and up to 55' (16.8 m)	15'-0" (4.6 m)	36" (900mm)	30" (750mm)	12	7(22)
Greater than or equal to 56' (16.8 m) and less than 65' (19.8 m)	21'-0" (6.4 m)	42" (1060mm)	36" (900mm)	16	8(25)
Greater than or equal to 65' (19.8 m) and up to 75' (22.9 m)	25'-0" (7.6 m)	42" (1060mm)	36" (900mm)	16	8(25)

NOTES:

1. These foundation depths are for sites which have cohesive soils (clayey silt, sandy clay, etc.) along the length of the shaft, with an average Unconfined Compressive Strength (Qu) > 1.0 tsf (100 kpa). This strength shall be verified by boring data prior to construction or with testing by the Engineer during foundation drilling. The Bureau of Bridges & Structures should be contacted for a revised design if other conditions are encountered.
2. Combination mast arm assemblies under 55 feet (16.8 m) shall use 36" (900 mm) diameter foundations.
3. Combination mast arm assemblies under 56 feet (16.8 m) through 75 feet (22.9 m) shall use 42" (1060 mm) diameter foundations.
4. For mast arm assemblies with dual arms refer to state standard 878001.

DEPTH OF MAST ARM FOUNDATIONS, TYPE E

FILE NAME =	USER NAME =	DESIGNED - DAG	REVISED -
		DRAWN - BCK	REVISED -
	PLOT SCALE =	CHECKED - DAD	REVISED -
	PLOT DATE =	DATE - 10/28/09	REVISED -

STATE OF ILLINOIS
DEPARTMENT OF TRANSPORTATION

DISTRICT 1
STANDARD TRAFFIC SIGNAL DESIGN DETAILS

SCALE: | SHEET NO. 5 OF 6 SHEETS | STA. | TO STA.

F.A.P. RTE.	SECTION	COUNTY	TOTAL SHEETS	SHEET NO.
575	14-N	WILL	163	65
		CONTRACT NO. 60W13		

FED. ROAD DIST. NO. 1 | ILLINOIS | FED. AID PROJECT

TRAFFIC SIGNAL LEGEND

ITEM	REMOVAL	EXISTING	PROPOSED
CONTROLLER CABINET	R		
RAILROAD CONTROL CABINET		RC	RC
COMMUNICATIONS CABINET	R CC	E.C.C	C.C.
MASTER CONTROLLER		EMC	MC
MASTER MASTER CONTROLLER		E.MMC	MMC
UNINTERRUPTIBLE POWER SUPPLY	R UPS	EUPS	UPS
SERVICE INSTALLATION, (P) POLE OR (G) GROUND MOUNT	R	P	P
TELEPHONE CONNECTION (P) POLE OR (G) GROUND MOUNT	R T	P T	P T
STEEL MAST ARM ASSEMBLY AND POLE	R		
ALUMINUM MAST ARM ASSEMBLY AND POLE	R		
STEEL COMBINATION MAST ARM ASSEMBLY AND POLE WITH LUMINAIRE	R		
STEEL COMBINATION MAST ARM ASSEMBLY AND POLE WITH PTZ CAMERA	R PTZ	PTZ	PTZ
SIGNAL POST	R		
TEMPORARY WOOD POLE (CLASS 5 OR BETTER) 45 FOOT (13.7m) MINIMUM	R		
GUY WIRE	R		
SIGNAL HEAD	R		
SIGNAL HEAD CONSTRUCTION STAGES (NUMBERS INDICATE THE CONSTRUCTION STAGE)			2
SIGNAL HEAD WITH BACKPLATE	R		
SIGNAL HEAD OPTICALLY PROGRAMMED	R		"P"
FLASHER INSTALLATION (S DENOTES SOLAR POWER)	R F	F	F
PEDESTRIAN SIGNAL HEAD	R		
PEDESTRIAN PUSHBUTTON DETECTOR	R		
ACCESSIBLE PEDESTRIAN PUSHBUTTON DETECTOR	R APS	APS	APS
ILLUMINATED SIGN "NO LEFT TURN"	R		
ILLUMINATED SIGN "NO RIGHT TURN"	R		
DETECTOR LOOP, TYPE I			
PREFORMED DETECTOR LOOP		P	P
MICROWAVE VEHICLE SENSOR	R M	M	M
VIDEO DETECTION CAMERA	R V	V	V
VIDEO DETECTION ZONE			
PAN, TILT, ZOOM CAMERA	R PTZ	PTZ	PTZ
WIRELESS DETECTOR SENSOR	R W	W	W
WIRELESS ACCESS POINT	R		

ITEM	REMOVAL	EXISTING	PROPOSED
EMERGENCY VEHICLE LIGHT DETECTOR	R		
CONFIRMATION BEACON	R		
HANDHOLE	R		
HEAVY DUTY HANDHOLE	R H	H	H
DOUBLE HANDHOLE	R		
JUNCTION BOX	R		
GALVANIZED STEEL CONDUIT IN TRENCH (T) OR PUSHED (P)			
TEMPORARY SPAN WIRE, TETHER WIRE, AND CABLE	R		
COMMON TRENCH			CT
COILABLE NONMETALLIC CONDUIT (EMPTY)			CNC
SYSTEM ITEM		S	S
INTERSECTION ITEM		I	IP
REMOVE ITEM	R		
RELOCATE ITEM	RL		
ABANDON ITEM	A		
12" (300mm) TRAFFIC SIGNAL SECTION		R	R
12" (300mm) RED WITH 8" (200mm) YELLOW AND GREEN TRAFFIC SIGNAL FACE		R Y G	
SIGNAL FACE		R Y G Y G	R Y G Y G
SIGNAL FACE WITH BACKPLATE. "P" INDICATES PROGRAMMED HEAD		R Y G Y G "P"	R Y G Y G "P"
12" (300mm) PEDESTRIAN SIGNAL HEAD WALK/DON'T WALK SYMBOL		DW W	
12" (300mm) PEDESTRIAN SIGNAL HEAD INTERNATIONAL SYMBOL, OUTLINED			
12" (300mm) PEDESTRIAN SIGNAL HEAD INTERNATIONAL SYMBOL, SOLID			
PEDESTRIAN SIGNAL HEAD, INTERNATIONAL SYMBOL, WITH COUNTDOWN TIMER		C D	C D
RADIO INTERCONNECT	R		
RADIO REPEATER	R ERR	ERR	RR
DENOTES NUMBER OF CONDUCTORS, ELECTRIC CABLE NO. 14, UNLESS NOTED OTHERWISE, ALL DETECTOR LOOP CABLE TO BE SHIELDED		5	5
GROUND CABLE IN CONDUIT NO. 6 SOLID COPPER (GREEN)		1	1

ITEM	REMOVAL	EXISTING	PROPOSED
ELECTRIC CABLE IN CONDUIT, TRACER, NO. 14 1/C, UNLESS NOTED OTHERWISE		1	1
COAXIAL CABLE		C	C
VENDOR CABLE FOR CAMERA		V	V
COPPER INTERCONNECT CABLE, NO. 18 3 PAIR TWISTED, SHIELDED		6	6
FIBER OPTIC CABLE NO. 62.5/125, MM12F		12F	
FIBER OPTIC CABLE NO. 62.5/125, MM12F SM12F		24F	24F
FIBER OPTIC CABLE NO. 62.5/125, (NUMBER OF FIBERS & TYPE TO BE NOTED ON PLANS)			
GROUND ROD AT (C) CONTROLLER, (H) HANDHOLE, (P) POST, (M) MAST ARM, OR (S) SERVICE		C	C
CONTROLLER CABINET AND FOUNDATION TO BE REMOVED	RCF		
STEEL MAST ARM POLE AND FOUNDATION TO BE REMOVED	RMF		
ALUMINUM MAST ARM POLE AND FOUNDATION TO BE REMOVED	RMF		
STEEL COMBINATION MAST ARM ASSEMBLY AND POLE WITH LUMINAIRE AND FOUNDATION TO BE REMOVED	RMF		
SIGNAL POST AND FOUNDATION TO BE REMOVED	RMF		
INTERSECTION & SAMPLING (SYSTEM) DETECTOR		IS	IS
SAMPLING (SYSTEM) DETECTOR		S	S
EXISTING INTERSECTION LOOP DETECTOR PROPOSED INTERSECTION AND SAMPLING (SYSTEM) DETECTOR		P	
EXISTING PREFORMED INTERSECTION LOOP DETECTOR PROPOSED INTERSECTION AND SAMPLING (SYSTEM) DETECTOR		PP	
PREFORMED INTERSECTION AND SAMPLING (SYSTEM) DETECTOR		PIS	PIS
PREFORMED SAMPLING (SYSTEM) DETECTOR		PS	PS

RAILROAD SYMBOLS

	EXISTING	PROPOSED
RAILROAD CONTROL CABINET	RC	RC
RAILROAD CANTILEVER MAST ARM		
FLASHING SIGNAL		
CROSSING GATE		
CROSSBUCK		

FILE NAME	USER NAME = kanthapitvongse	DESIGNED - DAG/BCK	REVISED -
		DRAWN - BCK	REVISED -
	PLOT SCALE = 2:1/IN.	CHECKED - DAD	REVISED -
	PLOT DATE = 10/28/2009	DATE - 10/28/09	REVISED -

STATE OF ILLINOIS
DEPARTMENT OF TRANSPORTATION

DISTRICT 1
STANDARD TRAFFIC SIGNAL DESIGN DETAILS

SCALE: NONE | SHEET NO. 6 OF 6 SHEETS | STA. | TO STA.

F.A.P. RTE.	SECTION	COUNTY	TOTAL SHEETS	SHEET NO.
575	14-N	WILL	163	66
		CONTRACT NO. 60W13		

FED. ROAD DIST. NO. 1 | ILLINOIS | FED. AID PROJECT

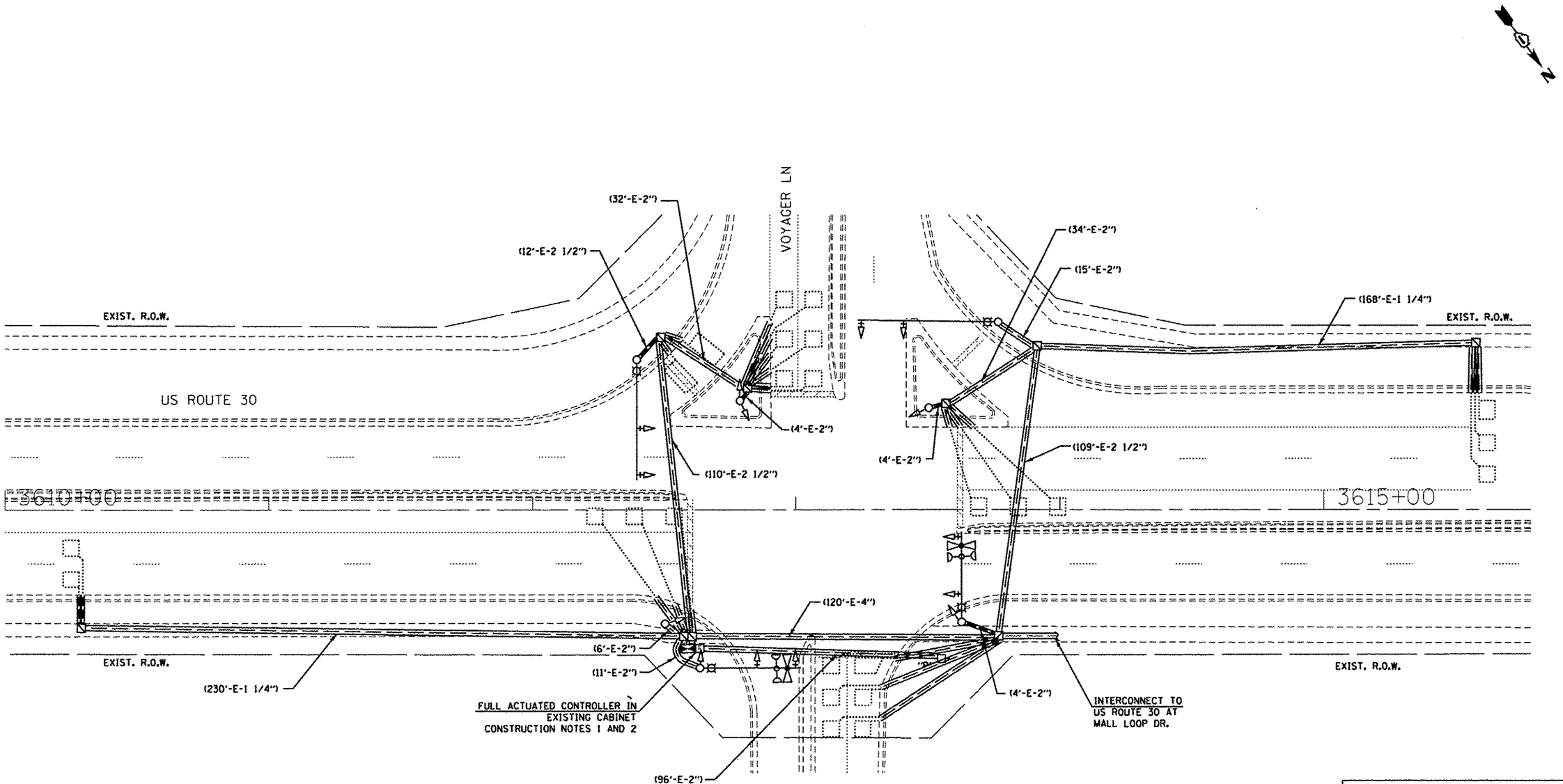

R.O.W. INFORMATION IS BASED ON THE EXISTING TRAFFIC SIGNAL INSTALLATION PLAN

THE TRAFFIC SIGNAL CONTROL EQUIPMENT FOR THIS PROJECT SHALL BE "ECONOLITE" TO MATCH THE EXISTING ADJACENT SYSTEM.

THE FOLLOWING ITEMS SHALL BE REMOVED BY THE CONTRACTOR AND SHALL BE DISPOSED OF BY THEM OUTSIDE THE RIGHT-OF-WAY AT THEIR EXPENSE. THE SALVAGE VALUE OF THE REMOVED EQUIPMENT SHALL BE REFLECTED IN THE CONTRACTOR'S BID PRICE.

1 EACH CONTROLLER

CONSTRUCTION NOTES:

1. THE CONTRACTOR SHALL REMOVE THE EXISTING CONTROLLER AND REPLACE WITH A BRAND NEW CONTROLLER. THIS WORK SHALL BE DONE DURING THE PRE-CONSTRUCTION STAGE SO THAT THIS INTERSECTION CAN BE WIRELESSLY INTERCONNECTED TO ADJACENT SIGNALIZED INTERSECTIONS. THE EXISTING CONTROLLER IS NOT CAPABLE OF USING WIRELESS INTERCONNECT.

2. WORK SHALL TAKE NO MORE THAN FOUR (4) HOURS AND SHALL BE DONE BETWEEN THE HOURS OF 9 A.M. AND 3 P.M. OR AS DIRECTED BY THE ENGINEER.

RESTORATION OF WORK AREA

RESTORATION OF THE TRAFFIC SIGNAL WORK AREA SHALL BE INCLUDED IN THE RELATED PAY ITEM SUCH AS FOUNDATION, CONDUIT, HANDHOLE, ETC. , AND NO EXTRA COMPENSATION SHALL BE ALLOWED. ALL ROADWAY SURFACES SUCH AS SHOULDERS, MEDIAN, SIDEWALKS, PAVEMENT, ETC. SHALL BE REPLACED IN KIND. ALL DAMAGE TO MOWED LAWNS SHALL BE REPLACED WITH AN APPROVED SOD, AND ALL DAMAGE TO UNMOWED FIELDS SHALL BE SEEDED IN ACCORDANCE WITH STANDARD SPECIFICATIONS 252 AND 250 RESPECTIVELY.

SINGH
SINGH & ASSOCIATES, INC.
CONSULTING ENGINEERS

USER NAME = _USER_	DESIGNED - MG	REVISED -	
FILE NAME = D160W13-sht-ts01.dgn	DRAWN - MG/VP	REVISED -	
PLOT SCALE = 20.0000 ' / in.	CHECKED - TY/KP	REVISED -	
PLOT DATE = 12/17/2013	DATE - 12/17/2013	REVISED -	

STATE OF ILLINOIS
DEPARTMENT OF TRANSPORTATION

TRAFFIC SIGNAL MODIFICATION PLAN
US ROUTE 30 AT VOYAGER LN

SCALE: 1"=20' | SHEET 7 OF 33 SHEETS | STA. 3610+00 TO STA. 3615+75

F.A.P. RTE.	SECTION	COUNTY	TOTAL SHEETS	SHEET NO.
575	14-N	WILL	163	67
		CONTRACT NO. 60W13		
		ILLINOIS FED. AID PROJECT		

CONTROLLER SEQUENCE

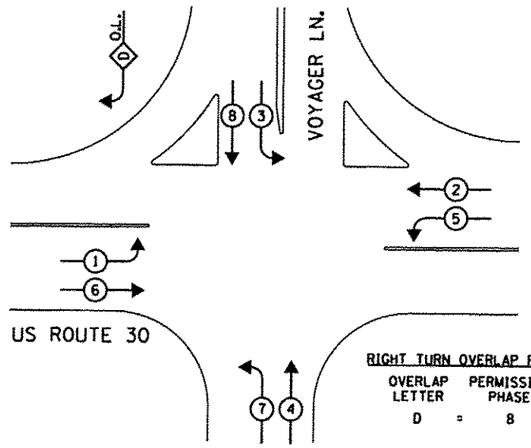

LEGEND

- DUAL ENTRY PHASE
- SINGLE ENTRY PHASE
- O.L. OVERLAP
- PEDESTRIAN PHASE
- NUMBER REFERS TO ASSOCIATED PHASE

RIGHT TURN OVERLAP PHASE DESIGNATION

OVERLAP LETTER		PERMISSIVE PHASE		PROTECTED PHASE
D	=	8	+	1

EXISTING PHASE DESIGNATION DIAGRAM

(NOT TO SCALE)

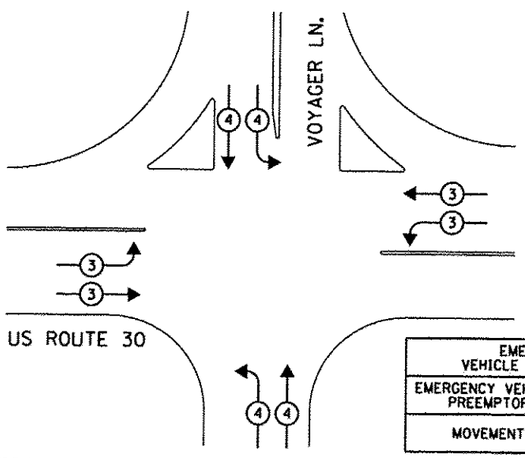

EMERGENCY VEHICLE PREEMPTORS		
EMERGENCY VEHICLE PREEMPTOR	3	4
MOVEMENT	⇄	⇅

EXISTING EMERGENCY VEHICLE PREEMPTION SEQUENCE

(NOT TO SCALE)

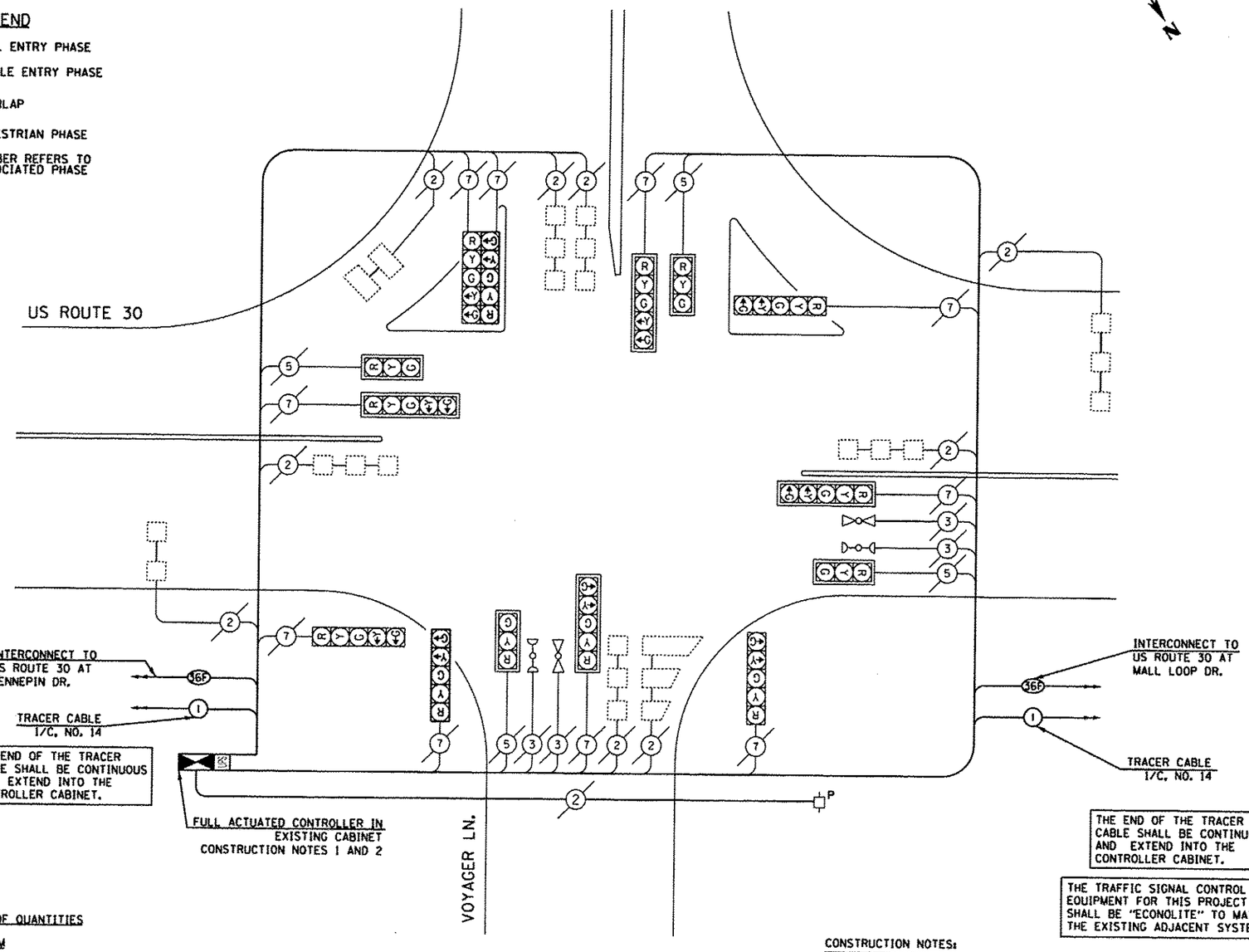

I.D.O.T.
TRAFFIC SIGNAL INSTALLATION
ELECTRICAL SERVICE REQUIREMENTS

TYPE	NO LAMPS	WATTAGE INCAND.	WATTAGE LED	%OPERATION	TOTAL WATTAGE
SIGNAL (RED)	14		17	0.50	119.0
(YELLOW)	14		25	0.25	87.5
(GREEN)	14		15	0.25	52.5
ARROW	20		12	0.10	24.0
PED. SIGNAL	-		25	1.00	-
CONTROLLER	1		100	1.00	100.0
ILLUM. SIGN	-		25	0.05	-
VIDEO SYSTEM	-	150		1.00	-
FLASHER				0.50	
				TOTAL =	383.0

ENERGY COSTS TO:
CITY OF JOLIET
150 W. JEFFERSON STREET
JOLIET, ILLINOIS 60432

ENERGY SUPPLY CONTACT: GREGG TRIEMSTRA
PHONE: 815-724-5534
COMPANY: COMMONWEALTH EDISON

SCHEDULE OF QUANTITIES

QUANTITY	UNIT	ITEM
1	EACH	MAINTENANCE OF EXISTING TRAFFIC SIGNAL INSTALLATION
1	EACH	TRANSCEIVER-FIBER OPTIC
1	EACH	MODIFY EXISTING CONTROLLER
1	EACH	MODIFY EXISTING CONTROLLER CABINET
1	EACH	FULL ACTUATED CONTROLLER IN EXISTING CABINET
1	EACH	UNINTERRUPTABLE POWER SUPPLY, SPECIAL
1	EACH	REMOVE EXISTING CONTROLLER

CONSTRUCTION NOTES:

1. THE CONTRACTOR SHALL REMOVE THE EXISTING CONTROLLER AND REPLACE WITH A BRAND NEW CONTROLLER. THIS WORK SHALL BE DONE DURING THE PRE-CONSTRUCTION STAGE SO THAT THIS INTERSECTION CAN BE WIRELESSLY INTERCONNECTED TO ADJACENT SIGNALIZED INTERSECTIONS. THE EXISTING CONTROLLER IS NOT CAPABLE OF USING WIRELESS INTERCONNECT.
2. WORK SHALL TAKE NO MORE THAN FOUR (4) HOURS AND SHALL BE DONE BETWEEN THE HOURS OF 9 A.M. AND 3 P.M. OR AS DIRECTED BY THE ENGINEER.

SINGH
SINGH + ASSOCIATES INC.
CONSULTING ENGINEERS

USER NAME = .USER.	DESIGNED - MG	REVISED -	
FILE NAME = D160W13-sht-ts02.dgn	DRAWN - VP/MG	REVISED -	
PLOT SCALE = 20.0000 ' / in.	CHECKED - TY/KP	REVISED -	
PLOT DATE = 12/17/2013	DATE - 12/17/2013	REVISED -	

STATE OF ILLINOIS
DEPARTMENT OF TRANSPORTATION

MODIFIED CABLE PLAN, EXISTING PHASE DESIGNATION DIAGRAM, EXISTING EMERGENCY VEHICLE PREEMPTION, AND SCHEDULE OF QUANTITIES, US ROUTE 30 AT VOYAGER LN.

SCALE: NTS | SHEET 8 OF 33 SHEETS | STA. TO STA.

F.A.P. RTE.	SECTION	COUNTY	TOTAL SHEETS	SHEET NO.
575	14-N	WILL	163	68
		CONTRACT NO. 60W13		
	ILLINOIS FED. AID PROJECT			

NOTES FOR TEMPORARY TRAFFIC SIGNALS

1. ALL CONTROL EQUIPMENT INCLUDING EMERGENCY PRE-EMPTION AND COMMUNICATION DEVICES FOR THE TEMPORARY TRAFFIC SIGNAL(S) SHALL BE FURNISHED BY THE CONTRACTOR.

2. ONLY CONTROLLERS SUPPLIED BY ONE OF THE DISTRICT APPROVED CLOSED LOOP EQUIPMENT MANUFACTURERS WILL BE APPROVED FOR USE AT TEMPORARY SIGNAL LOCATIONS. ALL CONTROLLERS USED FOR TEMPORARY SIGNALS SHALL BE FULLY ACTUATED NEMA MICROPROCESSOR BASED WITH RS232 DATA ENTRY PORTS COMPATIBLE WITH EXISTING MONITORING SOFTWARE APPROVED BY IDOT DISTRICT 1. INSTALLED IN A NEMA TS2 CABINET. ONLY ONE BRAND OF CONTROLLER WILL BE ACCEPTED FOR ANY ONE CONTRACT.

3. ALL TRAFFIC SIGNAL SECTIONS AND PEDESTRIAN SIGNAL SECTIONS SHALL BE LED AND 12" (300MM) DIAMETER, HEADS SHALL BE PLACED AS INDICATED ON THE TEMPORARY TRAFFIC SIGNAL PLAN OR AS DIRECTED BY THE ENGINEER. PEDESTRIAN SIGNALS SHALL INCLUDE SOLID INTERNATIONAL SYMBOLS. PEDESTRIAN SIGNALS WITH COUNTDOWN TIMERS SHALL BE USED WHEN THE EXISTING INSTALLATION UTILIZES COUNTDOWN TYPE OR AS DIRECTED BY THE ENGINEER. COUNTDOWN TYPE PEDESTRIAN SIGNALS ARE NOT TO BE INSTALLED AT A RAILROAD INTERSECTION. THE CONTRACTOR SHALL FURNISH ENOUGH CABLE SLACK TO RELOCATE HEADS TO ANY POSITION ON THE SPAN WIRE OR AT LOCATIONS ILLUSTRATED ON THE PLANS FOR CONSTRUCTION STAGING. THE TEMPORARY TRAFFIC SIGNAL SHALL REMAIN IN OPERATION DURING ALL SIGNAL HEAD RELOCATIONS. EACH TEMPORARY TRAFFIC SIGNAL HEAD SHALL HAVE ITS OWN CABLE FROM THE CONTROLLER CABINET TO THE SIGNAL HEAD.

4. ALL EXISTING STREET NAME AND INTERSECTION REGULATORY SIGNS SHALL BE REMOVED FROM EXISTING POLES, RELOCATED AND SECURELY FASTENED TO THE SPAN WIRE OR WOOD POLE AS DIRECTED BY THE ENGINEER.

5. ANY TEMPORARY SIGNAL WITHIN AN EXISTING CLOSED LOOP TRAFFIC SIGNAL SYSTEM SHALL BE INTERCONNECTED TO THAT SYSTEM USING SIMILAR BRAND CONTROL EQUIPMENT.

6. THE TEMPORARY TRAFFIC SIGNAL SHALL HAVE THE SIGNAL HEAD DISPLAYS, SIGNAL HEAD PLACEMENTS AND CONTROLLER PHASING MATCH THE EXISTING TRAFFIC SIGNAL, AT THE TIME OF THE TURN ON, IF NO TRAFFIC STAGING IS IN PLACE OR WILL NOT BE STAGED ON THE DAY OF THE TURN ON.

7. UNINTERRUPTIBLE POWER SUPPLY (UPS) SYSTEMS SHALL BE INSTALLED AND MADE OPERATIONAL AT TEMPORARY TRAFFIC SIGNAL INSTALLATIONS WHERE UPS IS INSTALLED AT THE EXISTING TRAFFIC SIGNAL, TEMPORARY TRAFFIC SIGNALS AT RAILROAD INTERSECTIONS, AND TEMPORARY TRAFFIC SIGNALS AT INTERSECTIONS WITH FIRE STATION ACTUATED EMERGENCY VEHICLE PRE-EMPTION, OR WHEN INDICATED ON THE PLANS.

8. TRAFFIC SIGNAL MANAGEMENT SYSTEMS SHALL BE MAINTAINED IN OPERATION AS INDICATED ON THE PLANS OR AS DIRECTED BY THE ENGINEER. REQUIRED EQUIPMENT SHALL BE AS SHOWN ON THE PLANS AND THE CONTRACTOR SHALL PLACE THE EQUIPMENT IN OPERATION TO THE SATISFACTION OF THE ENGINEER AND THE AGENCY RESPONSIBLE FOR THE TRAFFIC SIGNAL MANAGEMENT SYSTEM.

9. DETECTION AT TEMPORARY TRAFFIC SIGNALS SHALL BE INCLUDED FOR ALL APPROACHES OF THE INTERSECTION UNLESS INDICATED OTHERWISE ON THE PLANS. THE DETECTION SYSTEM MUST MEET THE SPECIFICATION OF DISTRICT 1 AND THE CONTRACTOR SHALL PLACE THE DETECTORS INTO OPERATION TO THE SATISFACTION OF THE ENGINEER.

10. WHEN PAN, TILT, ZOOM CAMERAS ARE INSTALLED AT THE EXISTING INTERSECTION OR ARE CALLED FOR IN THE PLANS, THE CONTRACTOR SHALL BE RESPONSIBLE FOR INSTALLING AND MAINTAINING THE CAMERAS TO THE SATISFACTION OF THE ENGINEER AND THE AGENCY RESPONSIBLE FOR THE CAMERAS

GENERAL NOTES:

1. IT SHALL BE THE CONTRACTOR'S RESPONSIBILITY TO VERIFY ALL DIMENSIONS AND CONDITIONS EXISTING IN THE FIELD PRIOR TO ORDERING MATERIALS AND BEGINNING CONSTRUCTION. THIS SHALL INCLUDE LOCATING THE MAST ARM FOUNDATIONS AND VERIFYING THE MAST ARMS LENGTHS.

2. THE EXACT LOCATION OF ALL UTILITIES SHALL BE FIELD VERIFIED BY THE CONTRACTOR BEFORE ORDERING ANY MATERIALS AND STARTING ANY WORK. FOR LOCATIONS OF UTILITIES, LOCALLY OWNED EQUIPMENT, LEASED ENFORCEMENT CAMERA SYSTEM FACILITIES AND IDOT UNDERGROUND FACILITIES, CONTACT THE LOCAL COUNTIES, MUNICIPALITIES AND IDOT FOR LOCATES. THE CONTRACTOR SHALL CALL JULIE AT (800) 892-0123 OR 811, IN THE CITY OF CHICAGO, CONTACT DIGGER AT (312) 744-7000 FOR FIELD LOCATIONS OF BURIED UTILITIES (48 HOURS NOTIFICATION REQUIRED).

3. THE CONTRACTOR SHALL CHECK THE PROPOSED TRAFFIC SIGNAL EQUIPMENT LOCATIONS FOR OVERHEAD UTILITY CONFLICTS. THE CONTRACTOR SHALL COORDINATE ANY CONFLICTS WITH THE UTILITY COMPANIES AND THE RESIDENT ENGINEER BEFORE ORDERING MATERIALS.

4. THE CONTRACTOR SHALL COORDINATE CONSTRUCTION ACTIVITIES WITH UTILITY COMPANIES, LOCAL GOVERNMENT AGENCIES AND IDOT.

THE FOLLOWING ITEMS SHALL BE REMOVED BY THE CONTRACTOR AND SHALL BE DISPOSED OF BY THEM OUTSIDE THE RIGHT-OF-WAY AT THEIR EXPENSE. THE SALVAGE VALUE OF THE REMOVED EQUIPMENT SHALL BE REFLECTED IN THE CONTRACTOR'S BID PRICE.

1	EACH	CONTROLLER AND CABINET COMPLETE
4	EACH	SIGNAL HEAD, 1-FACE 3-SECTION, MAST ARM MOUNTED
4	EACH	SIGNAL HEAD, 1-FACE 3-SECTION, BRACKET MOUNTED
1	EACH	SIGNAL HEAD, 1-FACE 5-SECTION, BRACKET MOUNTED
1	EACH	SIGNAL HEAD, 2-FACE, 1-3 SECTION, 1-5 SECTION, BRACKET MOUNTED
4	EACH	TRAFFIC SIGNAL BACKPLATE
4	EACH	TRAFFIC SIGNAL POST
2	EACH	STEEL MAST ARM ASSEMBLY AND POLE
1	EACH	SERVICE INSTALLATION

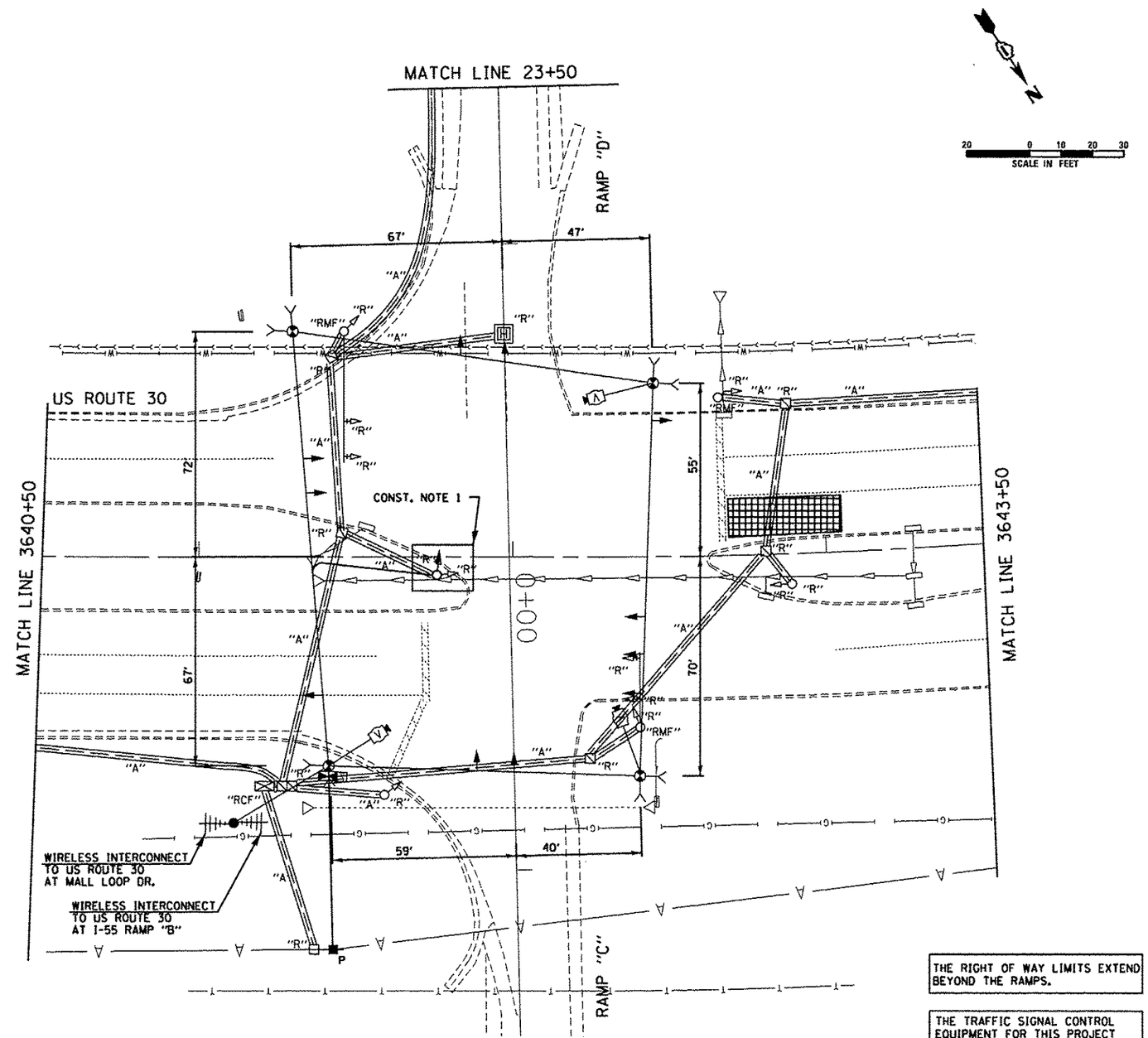

SIGNAL HEAD PLACEMENT FOR PRE-STAGE

THE RIGHT OF WAY LIMITS EXTEND BEYOND THE RAMPS.

THE TRAFFIC SIGNAL CONTROL EQUIPMENT FOR THIS PROJECT SHALL BE "ECONOLITE" TO MATCH THE EXISTING ADJACENT SYSTEM.

CONSTRUCTION NOTES:

1. TRAFFIC SIGNAL POST AND FOUNDATION WILL REMAIN IN PLACE AND TO BE USED DURING THE CONSTRUCTION PERIOD. REMOVE 2-3 SECTION BRACKET MOUNTED SIGNAL HEADS AND INSTALL A 4-SECTION SIGNAL HEAD. TRAFFIC SIGNAL POST, SIGNAL HEAD, AND FOUNDATION TO BE REMOVED AFTER THE CONSTRUCTION IS COMPLETE.

RESTORATION OF WORK AREA

RESTORATION OF THE TRAFFIC SIGNAL WORK AREA SHALL BE INCLUDED IN THE RELATED PAY ITEM SUCH AS FOUNDATION, CONDUIT, HANDHOLE, ETC. , AND NO EXTRA COMPENSATION SHALL BE ALLOWED. ALL ROADWAY SURFACES SUCH AS SHOULDERS, MEDIAN, SIDEWALKS, PAVEMENT, ETC. SHALL BE REPLACED IN KIND. ALL DAMAGE TO MOWED LAWNS SHALL BE REPLACED WITH AN APPROVED SOD, AND ALL DAMAGE TO UNMOWED FIELDS SHALL BE SEEDED IN ACCORDANCE WITH STANDARD SPECIFICATIONS 252 AND 250 RESPECTIVELY.

SINGH
SINGH + ASSOCIATES, INC.
CONSULTING ENGINEERS

USER NAME = _USER_	DESIGNED - MG	REVISED -	
FILE NAME = D160W13-sht-ts03.dgn	DRAWN - MG/VP	REVISED -	
PLOT SCALE = 20.0000 ' / in.	CHECKED - IY/KP	REVISED -	
PLOT DATE = 1/22/2014	DATE - 12/17/2013	REVISED -	

STATE OF ILLINOIS
DEPARTMENT OF TRANSPORTATION

TEMPORARY TRAFFIC SIGNAL INSTALLATION AND REMOVAL PLAN
US ROUTE 30 AT I-55 RAMPS C AND D

SCALE: 1"=20' | SHEET 9 OF 33 SHEETS | STA. 3640+50 TO STA. 3643+50

F.A.P. RTE.	SECTION	COUNTY	TOTAL SHEETS	SHEET NO.
575	14-N	WILL	163	69
		CONTRACT NO. 60W13		
		ILLINOIS FED. AID PROJECT		

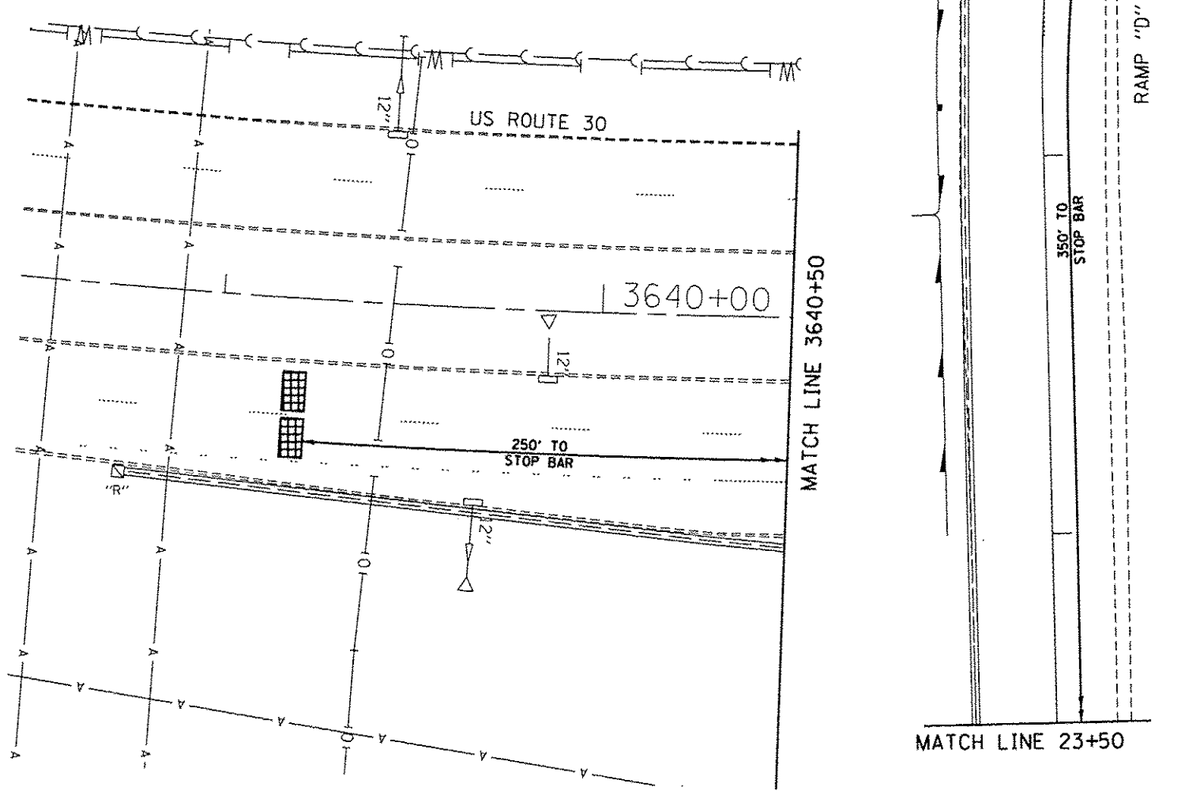

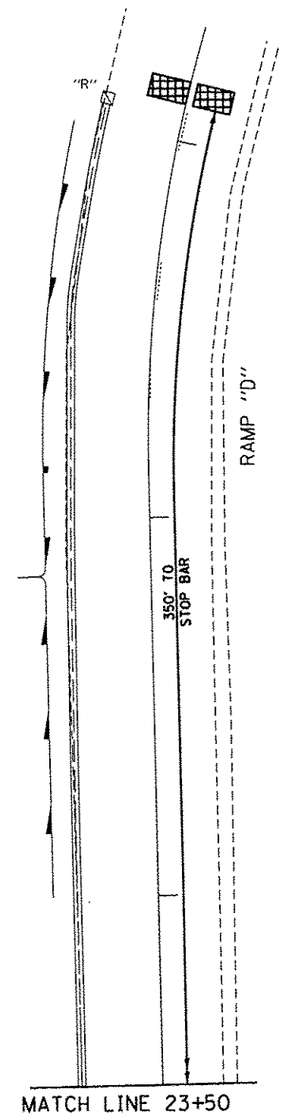

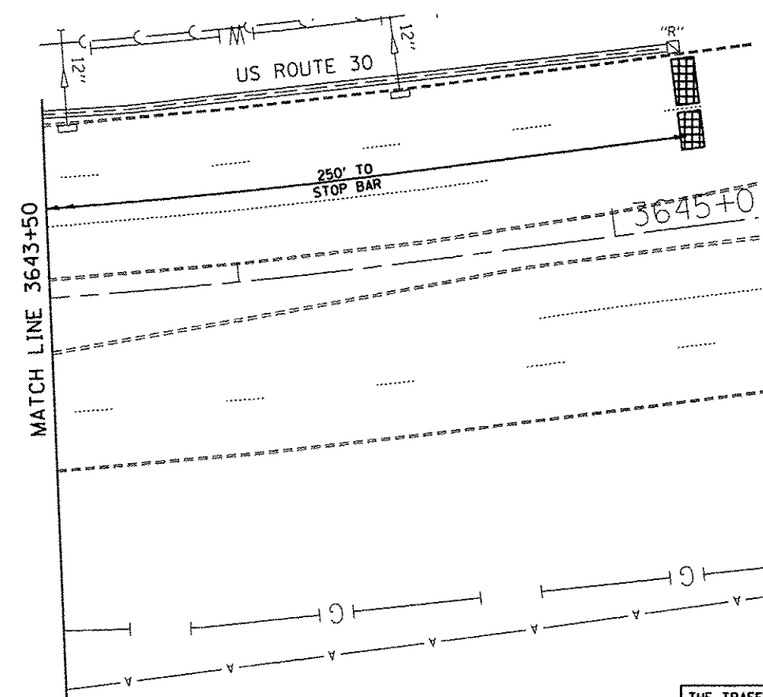

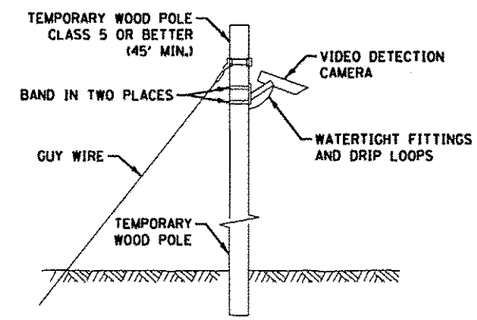

TEMPORARY VIDEO DETECTION MOUNTING DETAIL

(NOT TO SCALE)

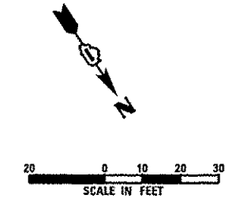

THE TRAFFIC SIGNAL CONTROL EQUIPMENT FOR THIS PROJECT SHALL BE "ECONOLITE" TO MATCH THE EXISTING ADJACENT SYSTEM.

SINGH + ASSOCIATES, INC.
CONSULTING ENGINEERS

USER NAME = _USER_	DESIGNED - MG	REVISED -	
FILE NAME = D160W13-sht-ts04.dgn	DRAWN - VP/MG	REVISED -	
PLOT SCALE = 20.0000 ' / in.	CHECKED - IY/KP	REVISED -	
PLOT DATE = 12/17/2013	DATE - 12/17/2013	REVISED -	

STATE OF ILLINOIS
DEPARTMENT OF TRANSPORTATION

TEMPORARY TRAFFIC SIGNAL INSTALLATION PLAN
US ROUTE 30 AT I-55 RAMPS C AND D

SCALE: 1"=20' | SHEET 10 OF 33 SHEETS | STA. TO STA.

F.A.P. RTE.	SECTION	COUNTY	TOTAL SHEETS	SHEET NO.
575	14-N	WILL	163	70

CONTRACT NO. 60W13

ILLINOIS FED. AID PROJECT

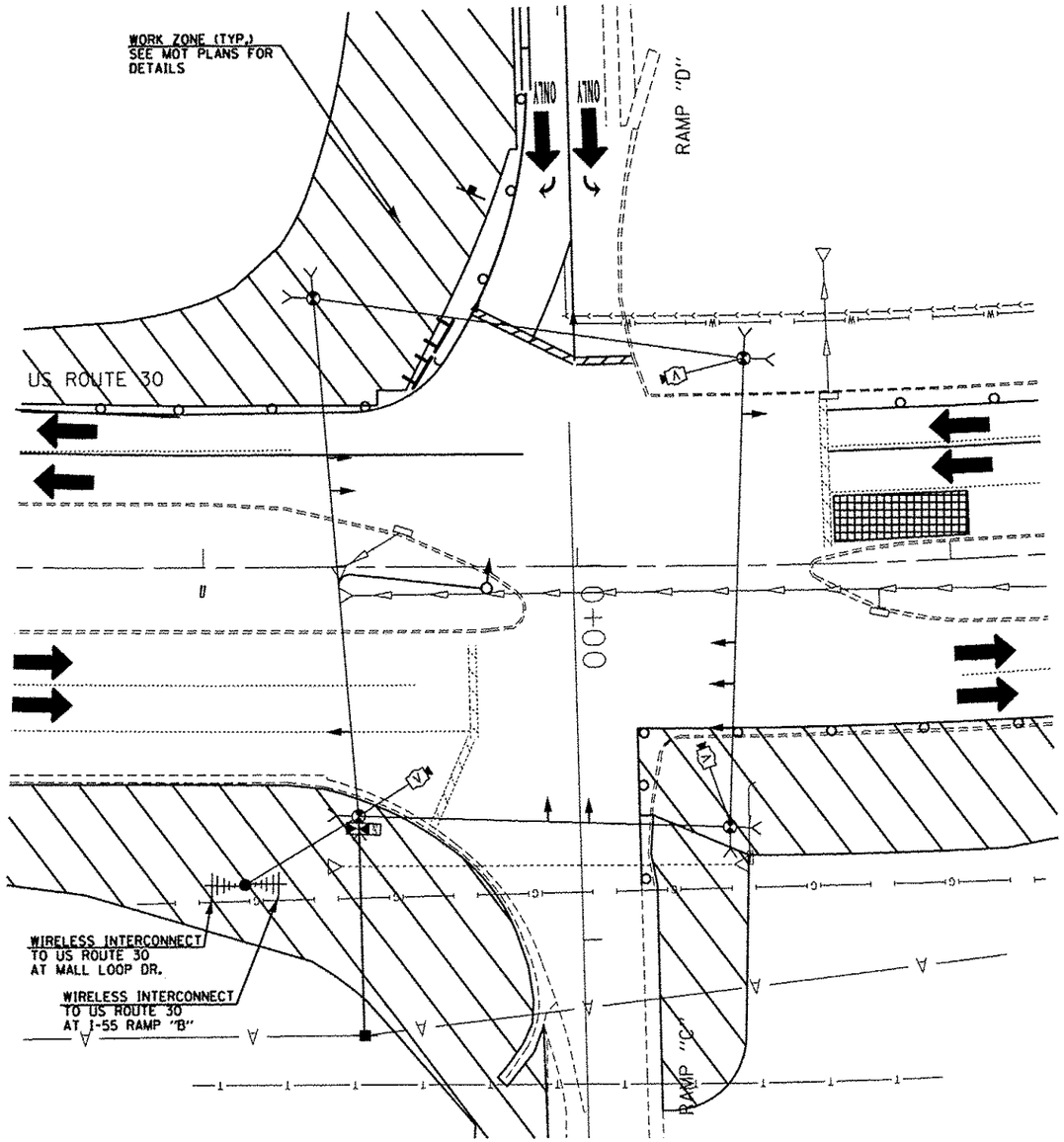

SIGNAL HEAD PLACEMENT FOR STAGE 1

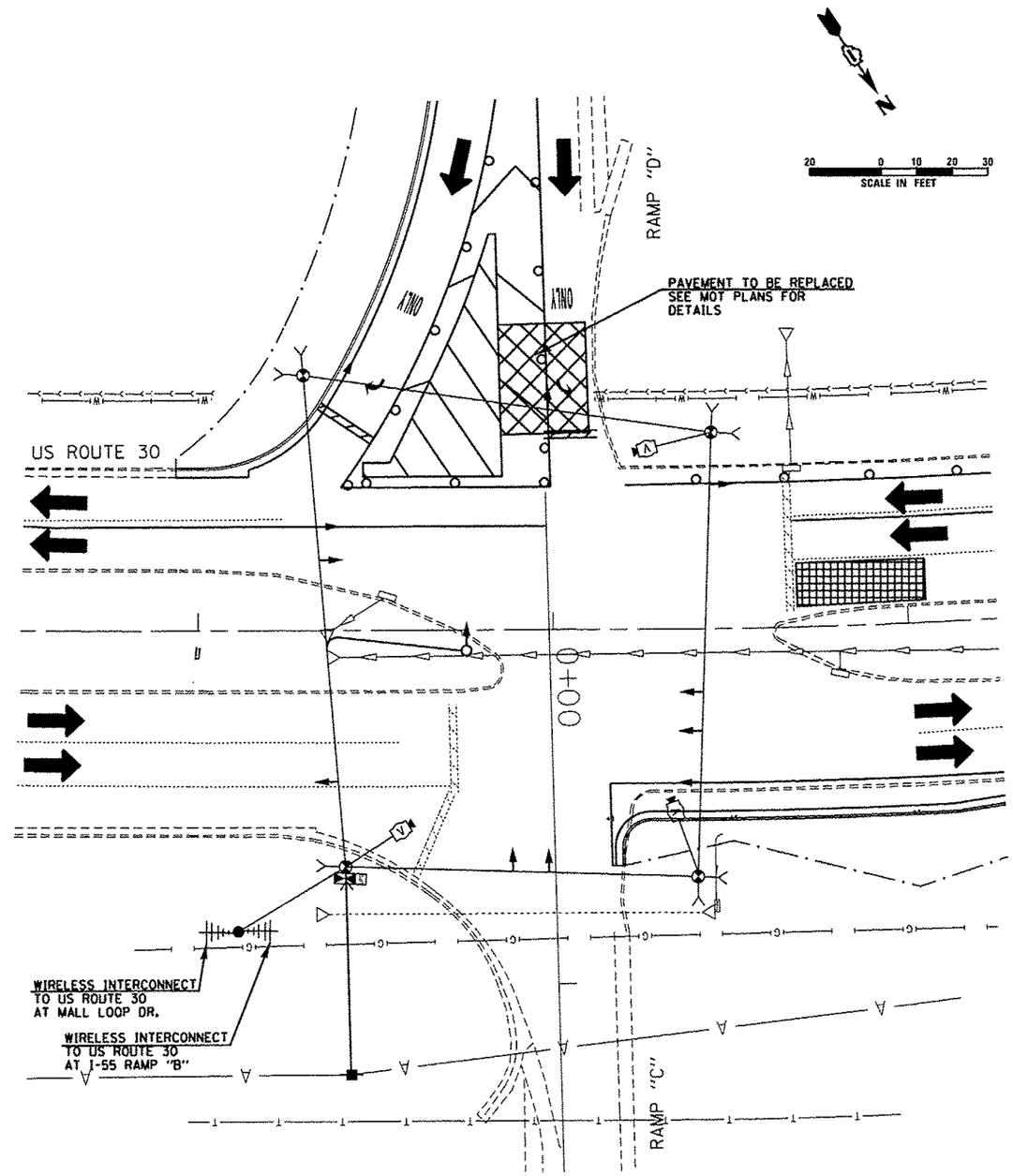

SIGNAL HEAD PLACEMENT FOR STAGE 2

THE TRAFFIC SIGNAL CONTROL EQUIPMENT FOR THIS PROJECT SHALL BE "ECONOLITE" TO MATCH THE EXISTING ADJACENT SYSTEM.

SINGH
SINGH + ASSOCIATES, INC.
CONSULTING ENGINEERS

USER NAME = .USER.	DESIGNED - VP	REVISED -	
FILE NAME = D160W13-sht-ts05.dgn	DRAWN - MG/VP	REVISED -	
PLOT SCALE = 20.0000 ' / in.	CHECKED - IY/KP	REVISED -	
PLOT DATE = 1/22/2014	DATE - 12/17/2013	REVISED -	

STATE OF ILLINOIS
DEPARTMENT OF TRANSPORTATION

TEMPORARY TRAFFIC SIGNAL INSTALLATION PLAN
US ROUTE 30 AT I-55 RAMPS C AND D

SCALE: 1"=20' | SHEET 11 OF 33 SHEETS | STA. TO STA.

F.A.P. RTE.	SECTION	COUNTY	TOTAL SHEETS	SHEET NO.
575	14-N	WILL	163	71
		CONTRACT NO. 60W13		
		ILLINOIS FED. AID PROJECT		

CONTROLLER SEQUENCE

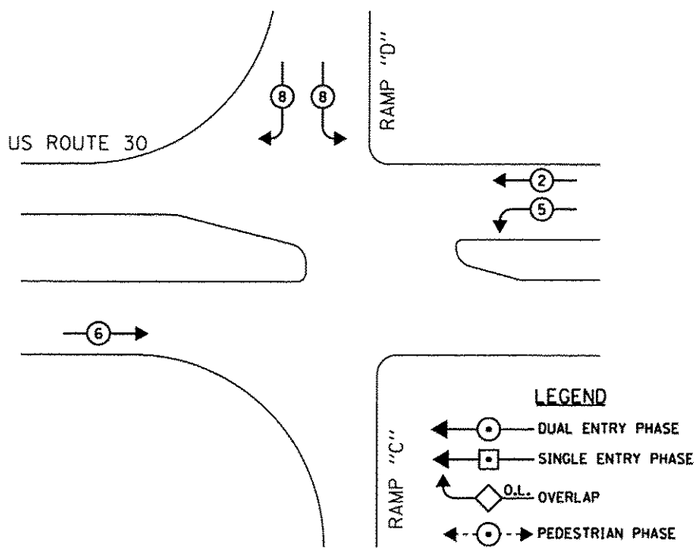

TEMPORARY PHASE DESIGNATION DIAGRAM

(NOT TO SCALE)

I.D.O.T. TRAFFIC SIGNAL INSTALLATION ELECTRICAL SERVICE REQUIREMENTS					TOTAL WATTAGE
TYPE	NO LAMPS	WATTAGE INCAND.	WATTAGE LED	%OPERATION	
SIGNAL (RED)	12		17	0.50	102.0
(YELLOW)	12		25	0.25	75.0
(GREEN)	17		15	0.25	63.75
ARROW	4		12	0.10	4.8
PED. SIGNAL	-		25	1.00	-
CONTROLLER	1		100	1.00	100.0
ILLUM. SIGN	-		25	0.05	-
VIDEO SYSTEM	1	150		1.00	150.0
FLASHER				0.50	
ENERGY COSTS TO:				TOTAL =	495.55

CITY OF JOLIET
150 W. JEFFERSON STREET
JOLIET, ILLINOIS 60432

ENERGY SUPPLY CONTACT: GREGG TRIEMSTRA
PHONE: 815-724-5534
COMPANY: COMMONWEALTH EDISON

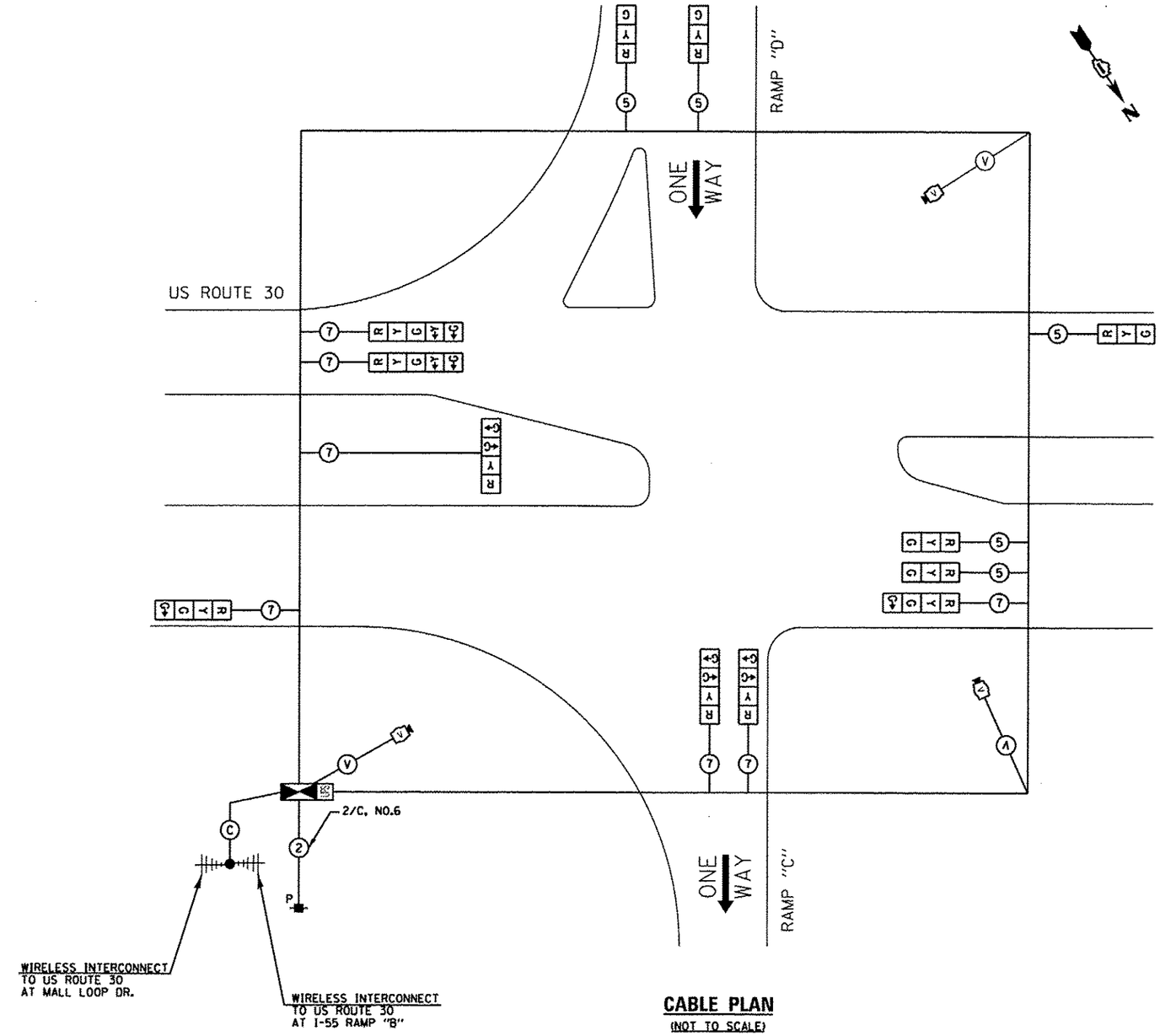

CABLE PLAN

(NOT TO SCALE)

THE TRAFFIC SIGNAL CONTROL EQUIPMENT FOR THIS PROJECT SHALL BE "ECONOLITE" TO MATCH THE EXISTING ADJACENT SYSTEM.

SINGH + ASSOCIATES, INC. CONSULTING ENGINEERS

USER NAME = USER	DESIGNED - MG	REVISED -	STATE OF ILLINOIS DEPARTMENT OF TRANSPORTATION
FILE NAME = D160W13-sht-ts06.dgn	DRAWN - VP/MG	REVISED -	
PLOT SCALE = 20.0000 ' / in.	CHECKED - IY/KP	REVISED -	
PLOT DATE = 12/17/2013	DATE - 12/17/2013	REVISED -	

TEMPORARY CABLE PLAN AND PHASE DESIGNATION DIAGRAM
US ROUTE 30 AT I-55 RAMPS C AND D

SCALE: NTS | SHEET 12 OF 34 SHEETS | STA. | TO STA.

F.A.P. RTE.	SECTION	COUNTY	TOTAL SHEETS	SHEET NO.
575	14-N	WILL	163	72

CONTRACT NO. 60W13

ILLINOIS FED. AID PROJECT

GENERAL NOTES:

1. IT SHALL BE THE CONTRACTOR'S RESPONSIBILITY TO VERIFY ALL DIMENSIONS AND CONDITIONS EXISTING IN THE FIELD PRIOR TO ORDERING MATERIALS AND BEGINNING CONSTRUCTION. THIS SHALL INCLUDE LOCATING THE MAST ARM FOUNDATIONS AND VERIFYING THE MAST ARMS LENGTHS.

2. THE EXACT LOCATION OF ALL UTILITIES SHALL BE FIELD VERIFIED BY THE CONTRACTOR BEFORE ORDERING ANY MATERIALS AND STARTING ANY WORK. FOR LOCATIONS OF UTILITIES, LOCALLY OWNED EQUIPMENT, LEASED ENFORCEMENT CAMERA SYSTEM FACILITIES AND IDOT UNDERGROUND FACILITIES, CONTACT THE LOCAL COUNTIES, MUNICIPALITIES AND IDOT FOR LOCATES. THE CONTRACTOR SHALL CALL JULIE AT (800) 892-0123 OR 811. IN THE CITY OF CHICAGO, CONTACT DIGGER AT (312) 744-7000 FOR FIELD LOCATIONS OF BURIED UTILITIES (48 HOURS NOTIFICATION REQUIRED).

3. THE CONTRACTOR SHALL CHECK THE PROPOSED TRAFFIC SIGNAL EQUIPMENT LOCATIONS FOR OVERHEAD UTILITY CONFLICTS. THE CONTRACTOR SHALL COORDINATE ANY CONFLICTS WITH THE UTILITY COMPANIES AND THE RESIDENT ENGINEER BEFORE ORDERING MATERIALS.

4. THE CONTRACTOR SHALL COORDINATE CONSTRUCTION ACTIVITIES WITH UTILITY COMPANIES, LOCAL GOVERNMENT AGENCIES AND IDOT.

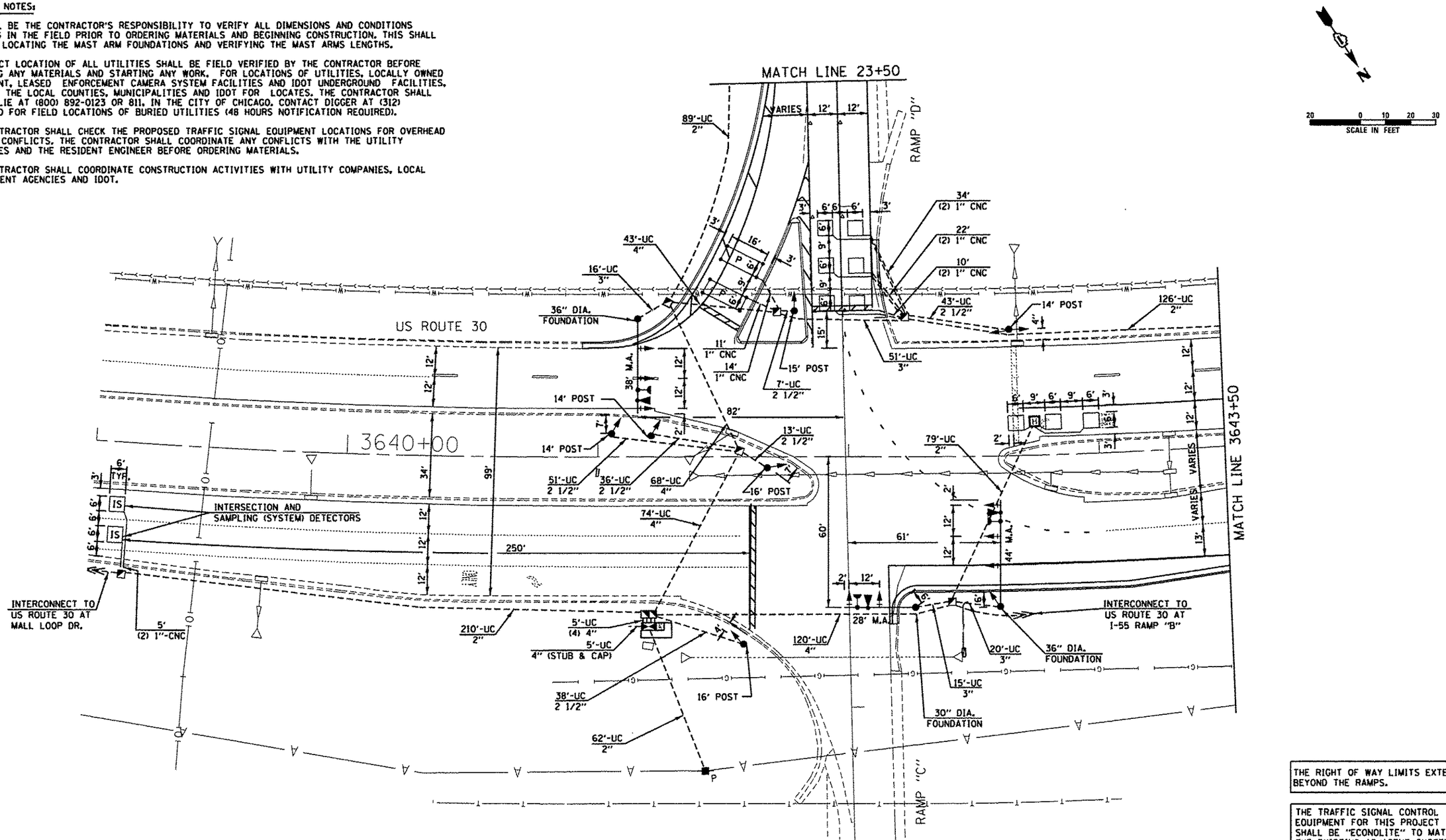

THE RIGHT OF WAY LIMITS EXTEND BEYOND THE RAMPS.

THE TRAFFIC SIGNAL CONTROL EQUIPMENT FOR THIS PROJECT SHALL BE "ECONOLITE" TO MATCH THE EXISTING ADJACENT SYSTEM.

RESTORATION OF WORK AREA

RESTORATION OF THE TRAFFIC SIGNAL WORK AREA SHALL BE INCLUDED IN THE RELATED PAY ITEM SUCH AS FOUNDATION, CONDUIT, HANDHOLE, ETC. , AND NO EXTRA COMPENSATION SHALL BE ALLOWED. ALL ROADWAY SURFACES SUCH AS SHOULDERS, MEDIAN, SIDEWALKS, PAVEMENT, ETC. SHALL BE REPLACED IN KIND. ALL DAMAGE TO MOWED LAWNS SHALL BE REPLACED WITH AN APPROVED SOD, AND ALL DAMAGED TO UNMOWED FIELDS SHALL BE SEEDED IN ACCORDANCE WITH STANDARD SPECIFICATIONS 252 AND 250 RESPECTIVELY.

SINGH
SINGH + ASSOCIATES, INC.
CONSULTING ENGINEERS

USER NAME = .USER.	DESIGNED - MG	REVISED -	
FILE NAME = D160W13-sht-ts07.dgn	DRAWN - VP/MG	REVISED -	
PLOT SCALE = 20.0000 ' / in.	CHECKED - IY/KP	REVISED -	
PLOT DATE = 1/22/2014	DATE - 12/17/2013	REVISED -	

STATE OF ILLINOIS
DEPARTMENT OF TRANSPORTATION

TRAFFIC SIGNAL INSTALLATION PLAN
US ROUTE 30 AT I-55 RAMPS C AND D

SCALE: 1"=20' | SHEET 13 OF 33 SHEETS | STA. 3639+00 TO STA. 3643+50

F.A.P. RTE.	SECTION	COUNTY	TOTAL SHEETS	SHEET NO.
575	14-N	WILL	163	73
		CONTRACT NO. 60W13		
	ILLINOIS FED. AID PROJECT			

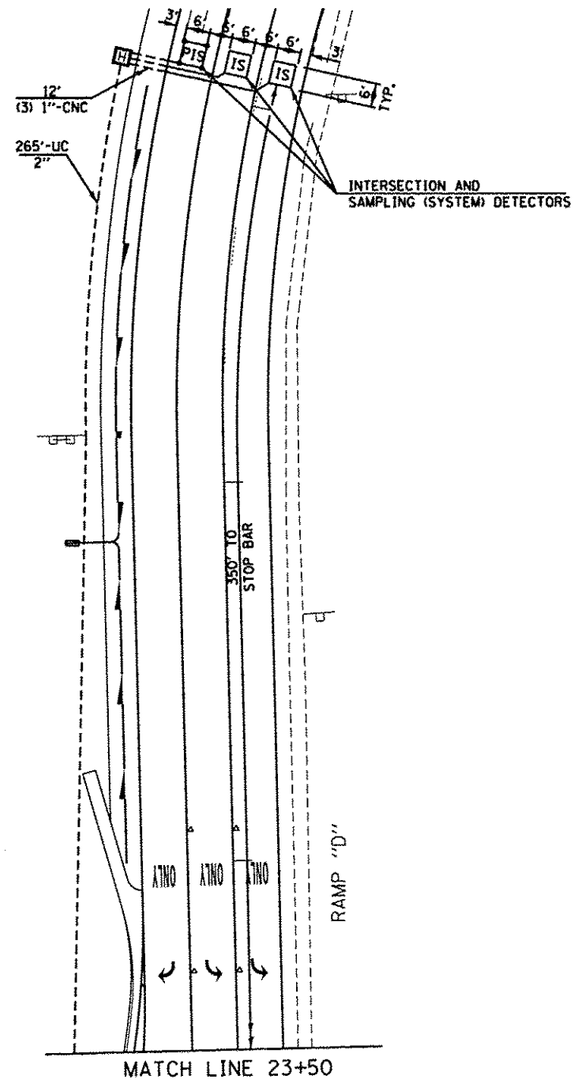

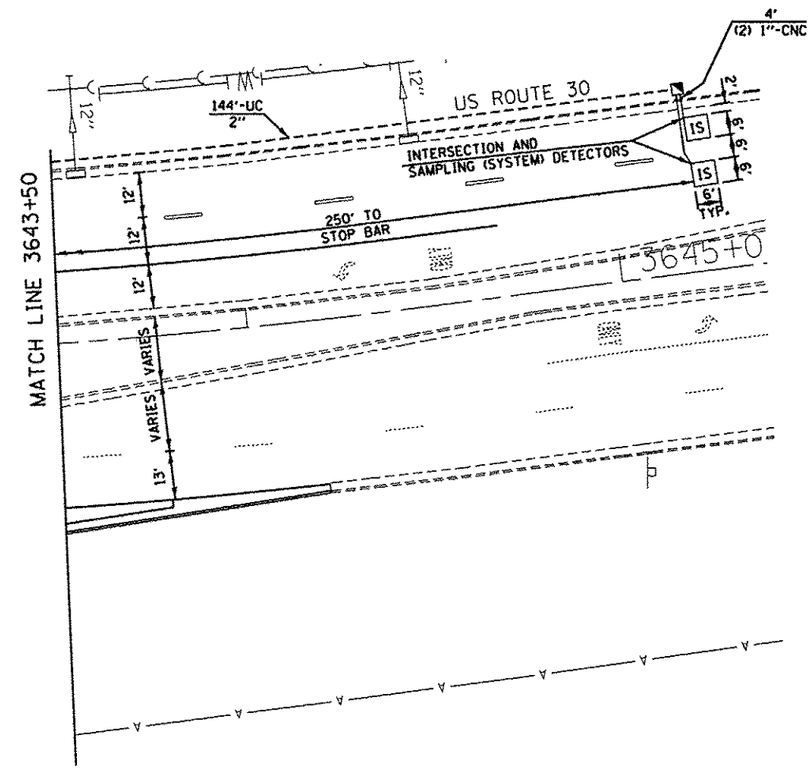

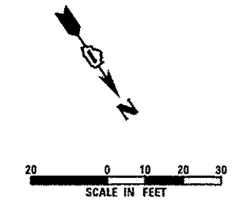

THE TRAFFIC SIGNAL CONTROL EQUIPMENT FOR THIS PROJECT SHALL BE "ECONOLITE" TO MATCH THE EXISTING ADJACENT SYSTEM.

SINGH + ASSOCIATES, INC. CONSULTING ENGINEERS	USER NAME = .USER.	DESIGNED - MG	REVISED -	STATE OF ILLINOIS DEPARTMENT OF TRANSPORTATION	TRAFFIC SIGNAL INSTALLATION PLAN US ROUTE 30 AT I-55 RAMPS C AND D	F.A.P. RTE.	SECTION	COUNTY	TOTAL SHEETS	SHEET NO.
	FILE NAME = D160W13-sht-tx08.dgn	DRAWN - VP/MG	REVISED -			575	14-N	WILL	163	74
	PLOT SCALE = 20.0000 ' / in.	CHECKED - TY/KP	REVISED -					CONTRACT NO. 60W13		
	PLOT DATE = 12/17/2013	DATE - 12/17/2013	REVISED -		SCALE: 1"=20' SHEET 14 OF 33 SHEETS STA. TO STA.		ILLINOIS FED. AID PROJECT			

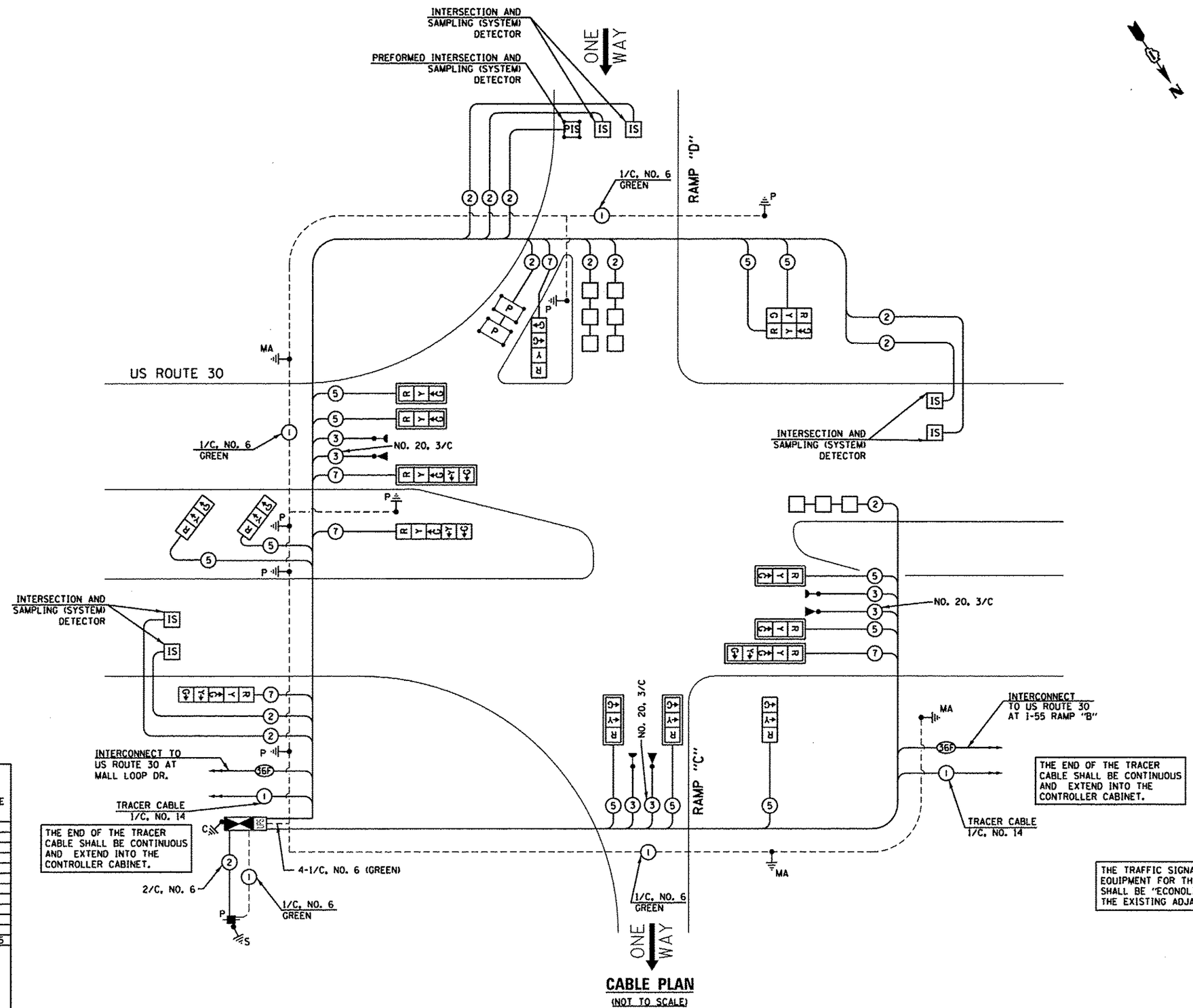

CABLE PLAN

(NOT TO SCALE)

THE TRAFFIC SIGNAL CONTROL EQUIPMENT FOR THIS PROJECT SHALL BE "ECONOLITE" TO MATCH THE EXISTING ADJACENT SYSTEM.

I.D.O.T.
TRAFFIC SIGNAL INSTALLATION
ELECTRICAL SERVICE REQUIREMENTS

TYPE	NO LAMPS	WATTAGE INCAND.	WATTAGE LED	% OPERATION	TOTAL WATTAGE
SIGNAL (RED)	16		17	0.50	136.0
(YELLOW)	16		25	0.25	100.0
(GREEN)	17		15	0.25	63.75
ARROW	8		12	0.10	9.6
PED. SIGNAL	-		25	1.00	-
CONTROLLER	1		100	1.00	100.0
ILLUM. SIGN	-		25	0.05	-
VIDEO SYSTEM	-	150		1.00	-
FLASHER				0.50	
ENERGY COSTS TO:				TOTAL =	409.35

CITY OF JOLIET
150 W. JEFFERSON STREET
JOLIET, ILLINOIS 60432

ENERGY SUPPLY CONTACT: GREGG TRIEMSTRA
PHONE: 815-724-5534
COMPANY: COMMONWEALTH EDISON

SINGH
SINGH + ASSOCIATES, INC.
CONSULTING ENGINEERS

USER NAME = USER	DESIGNED - MG	REVISED -
FILE NAME = D160W13-sht-ts09.dgn	DRAWN - VP/MG	REVISED -
PLOT SCALE = 20.0000 ' / in.	CHECKED - TY/KP	REVISED -
PLOT DATE = 12/17/2013	DATE - 12/17/2013	REVISED -

STATE OF ILLINOIS
DEPARTMENT OF TRANSPORTATION

CABLE PLAN
US ROUTE 30 AT I-55 RAMPS C AND D

SCALE: NTS | SHEET 15 OF 33 SHEETS | STA. TO STA.

F.A.P. RTE.	SECTION	COUNTY	TOTAL SHEETS	SHEET NO.
575	14-N	WILL	163	75

CONTRACT NO. 60W13
ILLINOIS FED. AID PROJECT

SCHEDULE OF QUANTITIES

QUANTITY	UNIT	ITEM
7.5	SQ FT	SIGN PANEL - TYPE 1
1	EACH	SERVICE INSTALLATION - POLE MOUNTED
951	FOOT	UNDERGROUND CONDUIT, GALVANIZED STEEL, 2" DIA.
188	FOOT	UNDERGROUND CONDUIT, GALVANIZED STEEL, 2½" DIA.
102	FOOT	UNDERGROUND CONDUIT, GALVANIZED STEEL, 3" DIA.
330	FOOT	UNDERGROUND CONDUIT, GALVANIZED STEEL, 4" DIA.
6	EACH	HANDHOLE
2	EACH	HEAVY-DUTY HANDHOLE
1	EACH	DOUBLE HANDHOLE
1	EACH	TRANSCEIVER-FIBER OPTIC
• 700	FOOT	ELECTRIC CABLE IN CONDUIT, SIGNAL NO. 14 3C
2560	FOOT	ELECTRIC CABLE IN CONDUIT, SIGNAL NO. 14 5C
932	FOOT	ELECTRIC CABLE IN CONDUIT, SIGNAL NO. 14 7C
4266	FOOT	ELECTRIC CABLE IN CONDUIT, LEAD-IN, NO. 14 1 PAIR
58	FOOT	ELECTRIC CABLE IN CONDUIT, SERVICE, NO. 6 2C
938	FOOT	ELECTRIC CABLE IN CONDUIT, EQUIPMENT GROUNDING CONDUCTOR, NO. 6 1C
3	EACH	TRAFFIC SIGNAL POST, GALVANIZED STEEL 14 FT.
1	EACH	TRAFFIC SIGNAL POST, GALVANIZED STEEL 15 FT.
2	EACH	TRAFFIC SIGNAL POST, GALVANIZED STEEL 16 FT.
1	EACH	STEEL MAST ARM ASSEMBLY AND POLE 28 FT.
1	EACH	STEEL MAST ARM ASSEMBLY AND POLE 38 FT.
1	EACH	STEEL MAST ARM ASSEMBLY AND POLE 44 FT.
24	FOOT	CONCRETE FOUNDATION, TYPE A
4	FOOT	CONCRETE FOUNDATION, TYPE C
10	FOOT	CONCRETE FOUNDATION, TYPE E 30-INCH DIAMETER
24	FOOT	CONCRETE FOUNDATION, TYPE E 36-INCH DIAMETER
6	EACH	SIGNAL HEAD, LED, 1-FACE, 3-SECTION, MAST ARM MOUNTED
3	EACH	SIGNAL HEAD, LED, 1-FACE, 3-SECTION, BRACKET MOUNTED
1	EACH	SIGNAL HEAD, LED, 1-FACE, 4-SECTION, BRACKET MOUNTED
2	EACH	SIGNAL HEAD, LED, 1-FACE, 5-SECTION, BRACKET MOUNTED
2	EACH	SIGNAL HEAD, LED, 1-FACE, 5-SECTION, MAST ARM MOUNTED
1	EACH	SIGNAL HEAD, LED, 2-FACE, 3-SECTION, BRACKET MOUNTED
8	EACH	TRAFFIC SIGNAL BACKPLATE, LOUVERED, ALUMINUM
11	EACH	INDUCTIVE LOOP DETECTOR
533	FOOT	DETECTOR LOOP, TYPE I
121	FOOT	PREFORMED DETECTOR LOOP
• 3	EACH	LIGHT DETECTOR
• 1	EACH	LIGHT DETECTOR AMPLIFIER
1	EACH	TEMPORARY TRAFFIC SIGNAL INSTALLATION
1	EACH	REMOVE EXISTING TRAFFIC SIGNAL EQUIPMENT
9	EACH	REMOVE EXISTING HANDHOLE
1	EACH	REMOVE EXISTING DOUBLE HANDHOLE
7	EACH	REMOVE EXISTING CONCRETE FOUNDATION
• 700	FOOT	EMERGENCY VEHICLE PRIORITY SYSTEM LINE SENSOR CABLE, NO. 20 3/C
1	EACH	FULL-ACTUATED CONTROLLER AND TYPE IV CABINET, SPECIAL
1	EACH	UNINTERRUPTABLE POWER SUPPLY, SPECIAL
1	EACH	TEMPORARY TRAFFIC SIGNAL TIMING

• 100% COST TO CITY OF JOLIET

CONTROLLER SEQUENCE

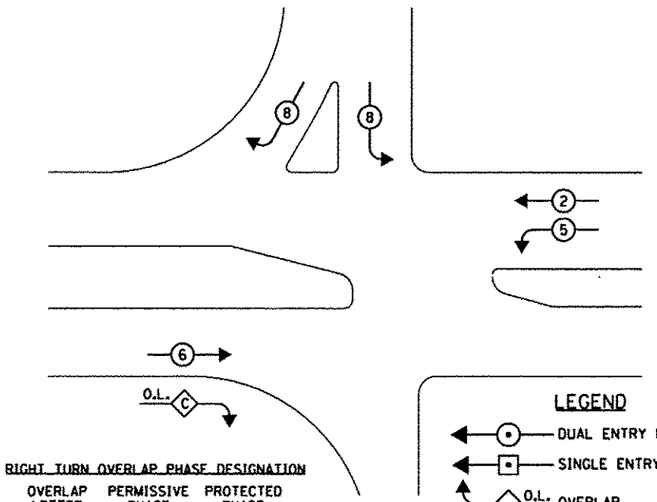

RIGHT TURN OVERLAP PHASE DESIGNATION

OVERLAP LETTER		PERMISSIVE PHASE		PROTECTED PHASE
C	=	6	+	8

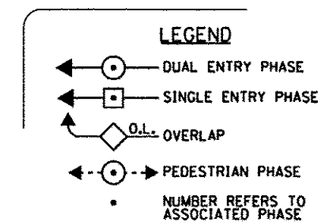

PHASE DESIGNATION DIAGRAM

(NOT TO SCALE)

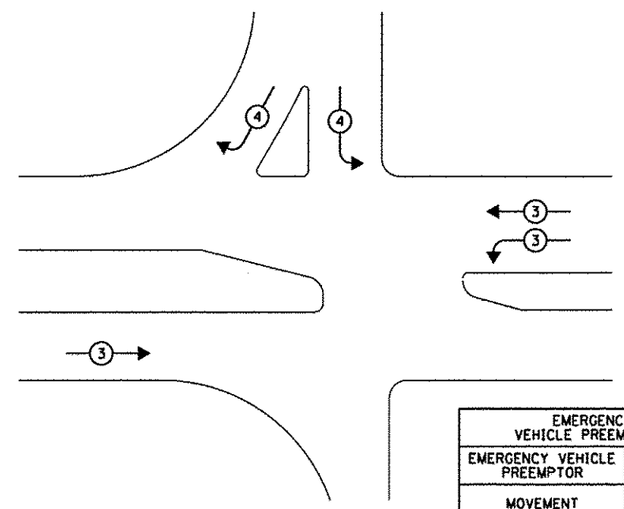

EMERGENCY VEHICLE PREEMPTORS		
EMERGENCY VEHICLE PREEMPTOR	3	4
MOVEMENT	⇄	↲ ↳

EMERGENCY VEHICLE PREEMPTION SEQUENCE

(NOT TO SCALE)

THE TRAFFIC SIGNAL CONTROL EQUIPMENT FOR THIS PROJECT SHALL BE "ECONOLITE" TO MATCH THE EXISTING ADJACENT SYSTEM.

NOTES FOR TEMPORARY TRAFFIC SIGNALS

1. ALL CONTROL EQUIPMENT INCLUDING EMERGENCY PRE-EMPTION AND COMMUNICATION DEVICES FOR THE TEMPORARY TRAFFIC SIGNAL(S) SHALL BE FURNISHED BY THE CONTRACTOR.

2. ONLY CONTROLLERS SUPPLIED BY ONE OF THE DISTRICT APPROVED CLOSED LOOP EQUIPMENT MANUFACTURERS WILL BE APPROVED FOR USE AT TEMPORARY SIGNAL LOCATIONS. ALL CONTROLLERS USED FOR TEMPORARY SIGNALS SHALL BE FULLY ACTUATED NEMA MICROPROCESSOR BASED WITH RS232 DATA ENTRY PORTS COMPATIBLE WITH EXISTING MONITORING SOFTWARE APPROVED BY IDOT DISTRICT 1, INSTALLED IN A NEMA TS2 CABINET. ONLY ONE BRAND OF CONTROLLER WILL BE ACCEPTED FOR ANY ONE CONTRACT.

3. ALL TRAFFIC SIGNAL SECTIONS AND PEDESTRIAN SIGNAL SECTIONS SHALL BE LED AND 12" (300MM) DIAMETER, HEADS SHALL BE PLACED AS INDICATED ON THE TEMPORARY TRAFFIC SIGNAL PLAN OR AS DIRECTED BY THE ENGINEER. PEDESTRIAN SIGNALS SHALL INCLUDE SOLID INTERNATIONAL SYMBOLS. PEDESTRIAN SIGNALS WITH COUNTDOWN TIMERS SHALL BE USED WHEN THE EXISTING INSTALLATION UTILIZES COUNTDOWN TYPE OR AS DIRECTED BY THE ENGINEER. COUNTDOWN TYPE PEDESTRIAN SIGNALS ARE NOT TO BE INSTALLED AT A RAILROAD INTERSECTION. THE CONTRACTOR SHALL FURNISH ENOUGH CABLE SLACK TO RELOCATE HEADS TO ANY POSITION ON THE SPAN WIRE OR AT LOCATIONS ILLUSTRATED ON THE PLANS FOR CONSTRUCTION STAGING. THE TEMPORARY TRAFFIC SIGNAL SHALL REMAIN IN OPERATION DURING ALL SIGNAL HEAD RELOCATIONS. EACH TEMPORARY TRAFFIC SIGNAL HEAD SHALL HAVE ITS OWN CABLE FROM THE CONTROLLER CABINET TO THE SIGNAL HEAD.

4. ALL EXISTING STREET NAME AND INTERSECTION REGULATORY SIGNS SHALL BE REMOVED FROM EXISTING POLES, RELOCATED AND SECURELY FASTENED TO THE SPAN WIRE OR WOOD POLE AS DIRECTED BY THE ENGINEER.

5. ANY TEMPORARY SIGNAL WITHIN AN EXISTING CLOSED LOOP TRAFFIC SIGNAL SYSTEM SHALL BE INTERCONNECTED TO THAT SYSTEM USING SIMILAR BRAND CONTROL EQUIPMENT.

6. THE TEMPORARY TRAFFIC SIGNAL SHALL HAVE THE SIGNAL HEAD DISPLAYS, SIGNAL HEAD PLACEMENTS AND CONTROLLER PHASING MATCH THE EXISTING TRAFFIC SIGNAL, AT THE TIME OF THE TURN ON, IF NO TRAFFIC STAGING IS IN PLACE OR WILL NOT BE STAGED ON THE DAY OF THE TURN ON.

7. UNINTERRUPTIBLE POWER SUPPLY (UPS) SYSTEMS SHALL BE INSTALLED AND MADE OPERATIONAL AT TEMPORARY TRAFFIC SIGNAL INSTALLATIONS WHERE UPS IS INSTALLED AT THE EXISTING TRAFFIC SIGNAL. TEMPORARY TRAFFIC SIGNALS AT RAILROAD INTERSECTIONS, AND TEMPORARY TRAFFIC SIGNALS AT INTERSECTIONS WITH FIRE STATION ACTUATED EMERGENCY VEHICLE PRE-EMPTION, OR WHEN INDICATED ON THE PLANS.

8. TRAFFIC SIGNAL MANAGEMENT SYSTEMS SHALL BE MAINTAINED IN OPERATION AS INDICATED ON THE PLANS OR AS DIRECTED BY THE ENGINEER. REQUIRED EQUIPMENT SHALL BE AS SHOWN ON THE PLANS AND THE CONTRACTOR HALL PLACE THE EQUIPMENT IN OPERATION TO THE SATISFACTION OF THE ENGINEER AND THE AGENCY RESPONSIBLE FOR THE TRAFFIC SIGNAL MANAGEMENT SYSTEM.

9. DETECTION AT TEMPORARY TRAFFIC SIGNALS SHALL BE INCLUDED FOR ALL APPROACHES OF THE INTERSECTION UNLESS INDICATED OTHERWISE ON THE PLANS. THE DETECTION SYSTEM MUST MEET THE SPECIFICATION OF DISTRICT 1 AND THE CONTRACTOR SHALL PLACE THE DETECTORS INTO OPERATION TO THE SATISFACTION OF THE ENGINEER.

10. WHEN PAN, TILT, ZOOM CAMERAS ARE INSTALLED AT THE EXISTING INTERSECTION OR ARE CALLED FOR IN THE PLANS, THE CONTRACTOR SHALL BE RESPONSIBLE FOR INSTALLING AND MAINTAINING THE CAMERAS TO THE SATISFACTION OF THE ENGINEER AND THE AGENCY RESPONSIBLE FOR THE CAMERAS

GENERAL NOTES:

1. IT SHALL BE THE CONTRACTOR'S RESPONSIBILITY TO VERIFY ALL DIMENSIONS AND CONDITIONS EXISTING IN THE FIELD PRIOR TO ORDERING MATERIALS AND BEGINNING CONSTRUCTION. THIS SHALL INCLUDE LOCATING THE MAST ARM FOUNDATIONS AND VERIFYING THE MAST ARMS LENGTHS.

2. THE EXACT LOCATION OF ALL UTILITIES SHALL BE FIELD VERIFIED BY THE CONTRACTOR BEFORE ORDERING ANY MATERIALS AND STARTING ANY WORK. FOR LOCATIONS OF UTILITIES, LOCALLY OWNED EQUIPMENT, LEASED ENFORCEMENT CAMERA SYSTEM FACILITIES AND IDOT UNDERGROUND FACILITIES, CONTACT THE LOCAL COUNTIES, MUNICIPALITIES AND IDOT FOR LOCATES. THE CONTRACTOR SHALL CALL JULIE AT (800) 892-0123 OR 811. IN THE CITY OF CHICAGO. CONTACT DIGGER AT (312) 744-7000 FOR FIELD LOCATIONS OF BURIED UTILITIES (48 HOURS NOTIFICATION REQUIRED).

3. THE CONTRACTOR SHALL CHECK THE PROPOSED TRAFFIC SIGNAL EQUIPMENT LOCATIONS FOR OVERHEAD UTILITY CONFLICTS. THE CONTRACTOR SHALL COORDINATE ANY CONFLICTS WITH THE UTILITY COMPANIES AND THE RESIDENT ENGINEER BEFORE ORDERING MATERIALS.

4. THE CONTRACTOR SHALL COORDINATE CONSTRUCTION ACTIVITIES WITH UTILITY COMPANIES, LOCAL GOVERNMENT AGENCIES AND IDOT.

THE FOLLOWING ITEMS SHALL BE REMOVED BY THE CONTRACTOR AND SHALL BE DISPOSED OF BY THEM OUTSIDE THE RIGHT-OF-WAY AT THEIR EXPENSE. THE SALVAGE VALUE OF THE REMOVED EQUIPMENT SHALL BE REFLECTED IN THE CONTRACTOR'S BID PRICE.

1	EACH	CONTROLLER AND CABINET COMPLETE
4	EACH	SIGNAL HEAD, 1-FACE 3-SECTION, MAST ARM MOUNTED
4	EACH	SIGNAL HEAD, 1-FACE 3-SECTION, BRACKET MOUNTED
1	EACH	SIGNAL HEAD, 1-FACE 5-SECTION, BRACKET MOUNTED
1	EACH	SIGNAL HEAD, 2-FACE, 1-3 SECTION, 1-5 SECTION, BRACKET MOUNTED
4	EACH	TRAFFIC SIGNAL BACKPLATE
4	EACH	TRAFFIC SIGNAL POST
2	EACH	STEEL MAST ARM ASSEMBLY AND POLE
1	EACH	SERVICE INSTALLATION

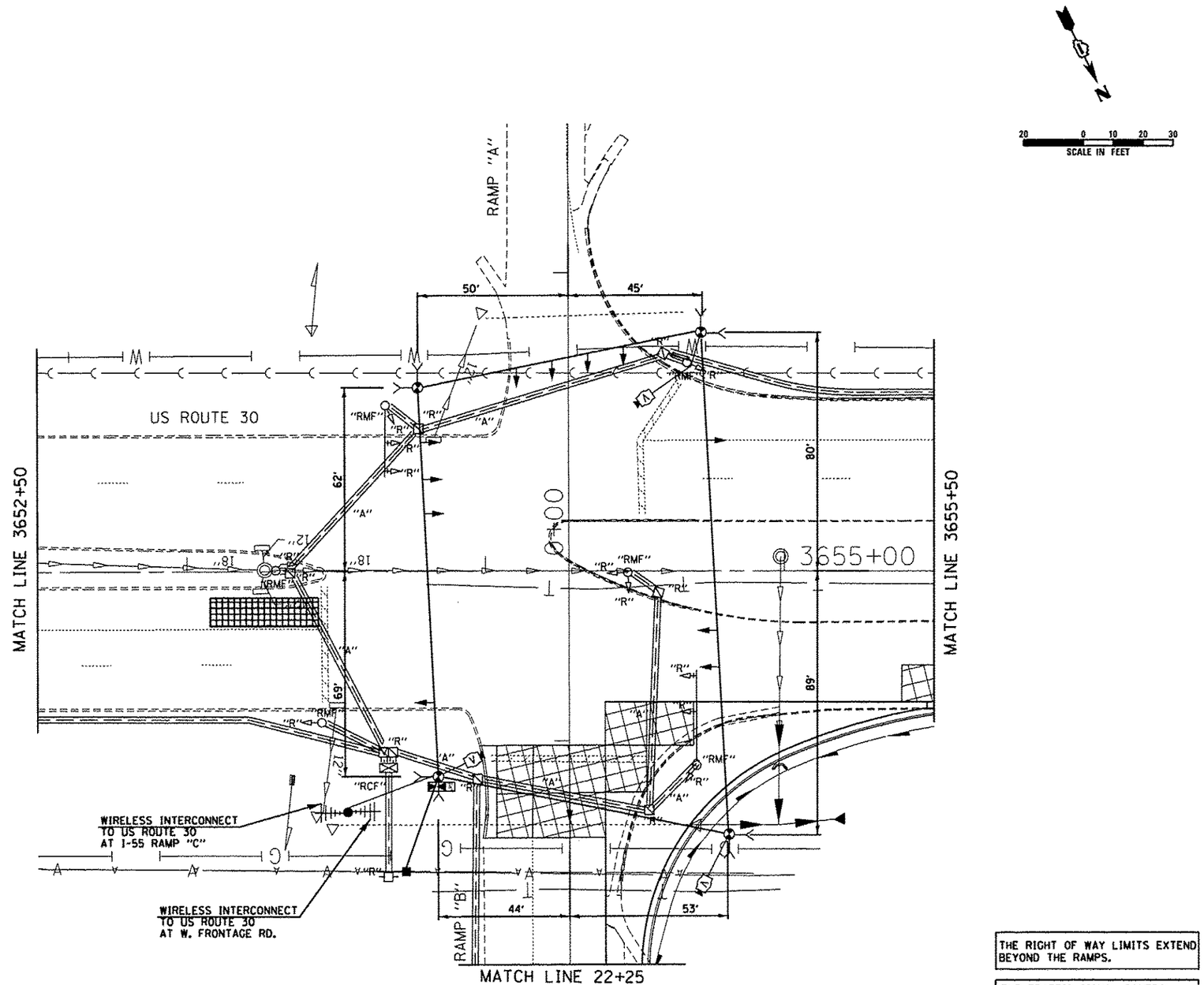

SIGNAL HEAD PLACEMENT FOR PRE-STAGE

THE RIGHT OF WAY LIMITS EXTEND BEYOND THE RAMPS.

THE TRAFFIC SIGNAL CONTROL EQUIPMENT FOR THIS PROJECT SHALL BE "ECONOLITE" TO MATCH THE EXISTING ADJACENT SYSTEM.

RESTORATION OF WORK AREA

RESTORATION OF THE TRAFFIC SIGNAL WORK AREA SHALL BE INCLUDED IN THE RELATED PAY ITEM SUCH AS FOUNDATION, CONDUIT, HANDHOLE, ETC. , AND NO EXTRA COMPENSATION SHALL BE ALLOWED. ALL ROADWAY SURFACES SUCH AS SHOULDERS, MEDIAN, SIDEWALKS, PAVEMENT, ETC. SHALL BE REPLACED IN KIND. ALL DAMAGE TO MOWED LAWNS SHALL BE REPLACED WITH AN APPROVED SOD, AND ALL DAMAGE TO UNMOWED FIELDS SHALL BE SEEDED IN ACCORDANCE WITH STANDARD SPECIFICATIONS 252 AND 250 RESPECTIVELY.

SINGH
SINGH + ASSOCIATES, INC.
CONSULTING ENGINEERS

USER NAME = USER	DESIGNED - MG	REVISED -	
FILE NAME = 0160W13-sht-tsll.dgn	DRAWN - VP/MG	REVISED -	
PLOT SCALE = 20.0000 ' / in.	CHECKED - IY/KP	REVISED -	
PLOT DATE = 12/17/2013	DATE - 12/17/2013	REVISED -	

STATE OF ILLINOIS
DEPARTMENT OF TRANSPORTATION

TEMPORARY TRAFFIC SIGNAL INSTALLATION PLAN AND REMOVAL PLAN
US ROUTE 30 AT I-55 RAMPS A AND B

SCALE: 1"=20' | SHEET 17 OF 33 SHEETS | STA. 3652+50 TO STA. 3655+50

F.A.P. RTE.	SECTION	COUNTY	TOTAL SHEETS	SHEET NO.
575	14-N	WILL	163	77

CONTRACT NO. 60W13

ILLINOIS FED. AID PROJECT

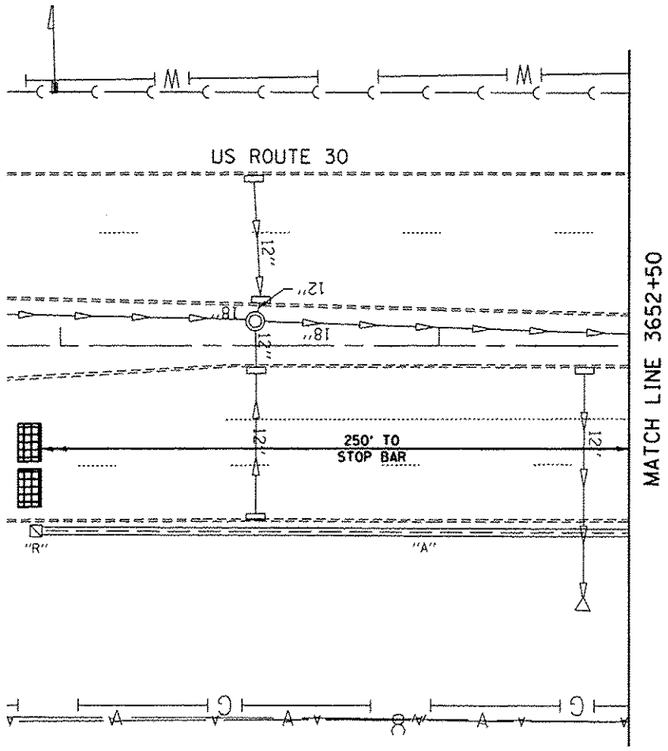

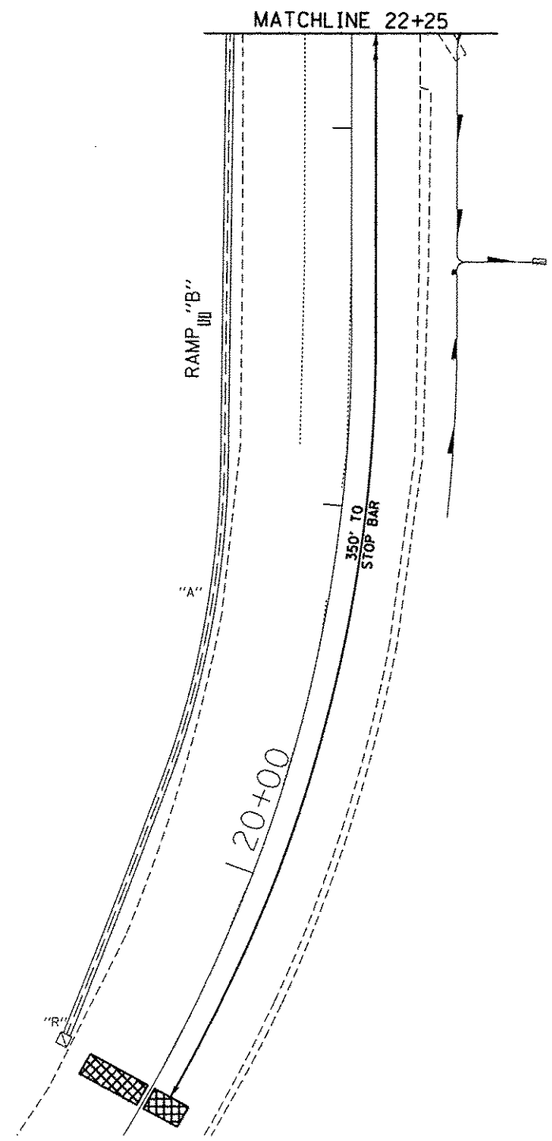

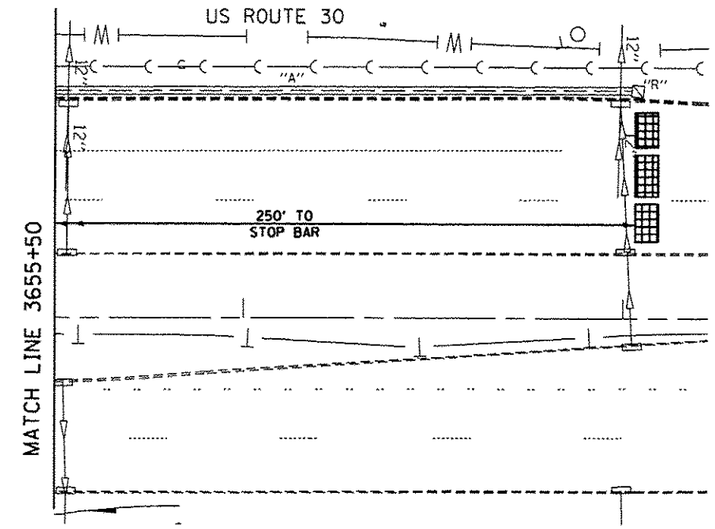

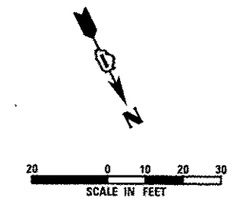

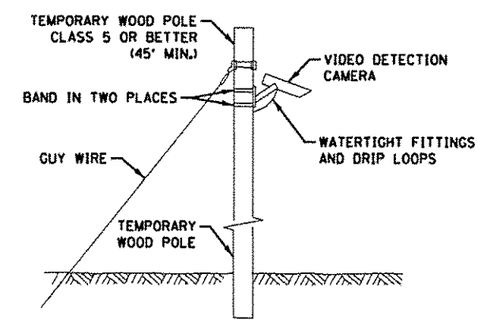

TEMPORARY VIDEO DETECTION MOUNTING DETAIL

(NOT TO SCALE)

THE TRAFFIC SIGNAL CONTROL EQUIPMENT FOR THIS PROJECT SHALL BE "ECONOLITE" TO MATCH THE EXISTING ADJACENT SYSTEM.

SINGH
SINGH + ASSOCIATES, INC.
CONSULTING ENGINEERS

USER NAME = .USER.	DESIGNED - MG	REVISED -	
FILE NAME = D160W13-sht-tsl2.dgn	DRAWN - VP/MG	REVISED -	
PLOT SCALE = 20.0000 ' / in.	CHECKED - IY/KP	REVISED -	
PLOT DATE = 12/17/2013	DATE - 12/17/2013	REVISED -	

STATE OF ILLINOIS
DEPARTMENT OF TRANSPORTATION

TEMPORARY TRAFFIC SIGNAL INSTALLATION PLAN
US ROUTE 30 AT I-55 RAMPS A AND B

SCALE: 1"=20' | SHEET 18 OF 33 SHEETS | STA. TO STA.

F.A.P. RTE.	SECTION	COUNTY	TOTAL SHEETS	SHEET NO.
575	14-N	WILL	163	78

CONTRACT NO. 60W13

ILLINOIS FED. AID PROJECT

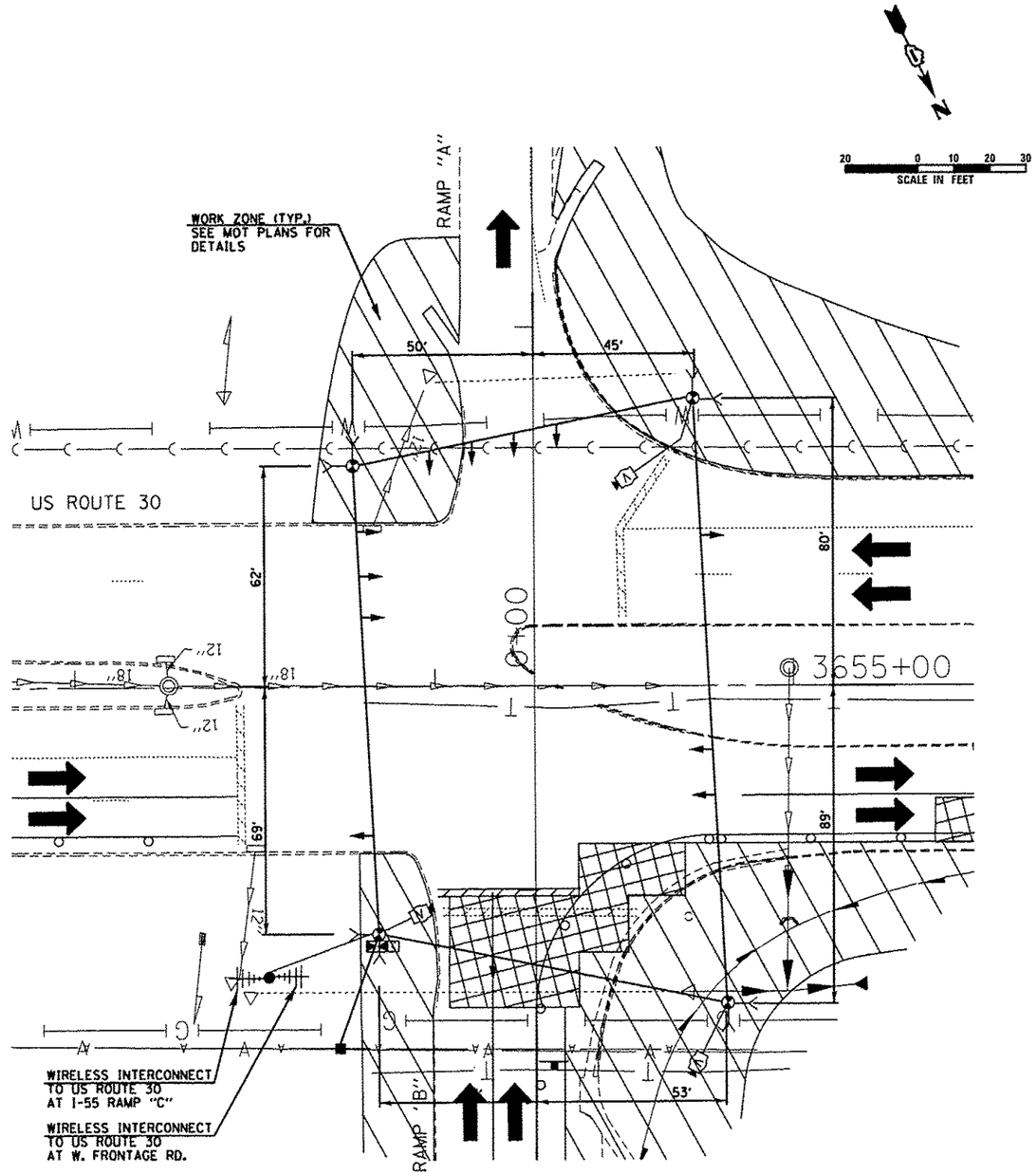

SIGNAL HEAD PLACEMENT FOR STAGE I

THE TRAFFIC SIGNAL CONTROL EQUIPMENT FOR THIS PROJECT SHALL BE "ECONOLITE" TO MATCH THE EXISTING ADJACENT SYSTEM.

SINGH + ASSOCIATES, INC. CONSULTING ENGINEERS	USER NAME = .USER.	DESIGNED - MG	REVISED -	STATE OF ILLINOIS DEPARTMENT OF TRANSPORTATION	TEMPORARY TRAFFIC SIGNAL INSTALLATION PLAN US ROUTE 30 AT I-55 RAMPS A AND B	F.A.P. RTE.	SECTION	COUNTY	TOTAL SHEETS	SHEET NO.
	FILE NAME = 0160W13-sht-tsl3.dgn	DRAWN - VP/MG	REVISED -			575	14-N	WILL	163	79
	PLOT SCALE = 20.0000 ' / in.	CHECKED - TY/KP	REVISED -					CONTRACT NO. 60W13		
	PLOT DATE = 12/17/2013	DATE - 12/17/2013	REVISED -		SCALE: 1"=20' SHEET 19 OF 33 SHEETS STA. 3652+78 TO STA. 3655+50		ILLINOIS	FED. AID PROJECT		

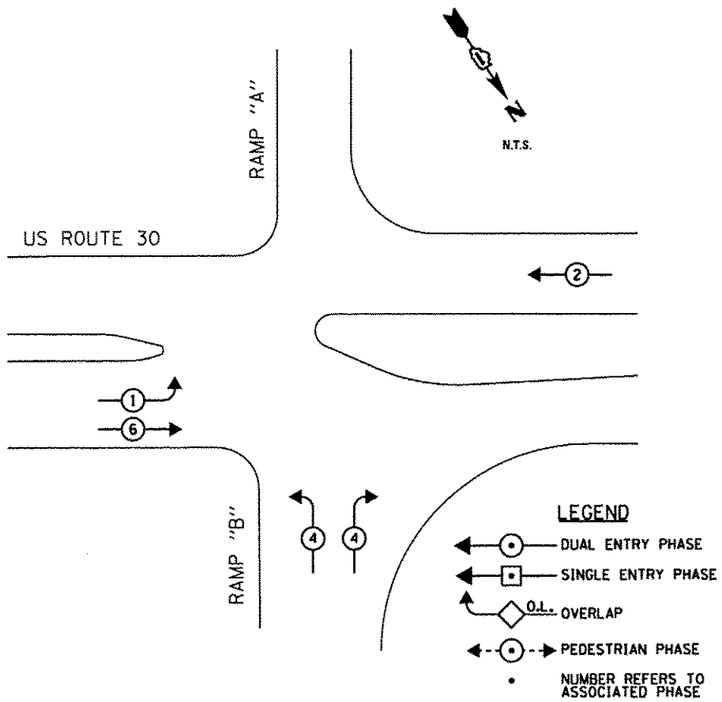

TEMPORARY PHASE DESIGNATION DIAGRAM

(NOT TO SCALE)

I.D.O.T. TRAFFIC SIGNAL INSTALLATION ELECTRICAL SERVICE REQUIREMENTS					TOTAL WATTAGE
TYPE	NO LAMPS	WATTAGE INCAND.	WATTAGE LED	%OPERATION	
SIGNAL (RED)	12		17	0.50	102.0
(YELLOW)	12		25	0.25	75.0
(GREEN)	15		15	0.25	56.25
ARROW	4		12	0.10	4.80
PED. SIGNAL	-		25	1.00	-
CONTROLLER	1		100	1.00	100.00
ILLUM. SIGN			25	0.05	
VIDEO SYSTEM	1	150		1.00	150.00
FLASHER				0.50	
ENERGY COSTS TO:				TOTAL =	488.05

CITY OF JOLIET
150 W. JEFFERSON STREET
JOLIET, ILLINOIS 60432

ENERGY SUPPLY CONTACT: GREGG TRIEMSTRA
PHONE: 815-724-5534
COMMONWEALTH EDISON

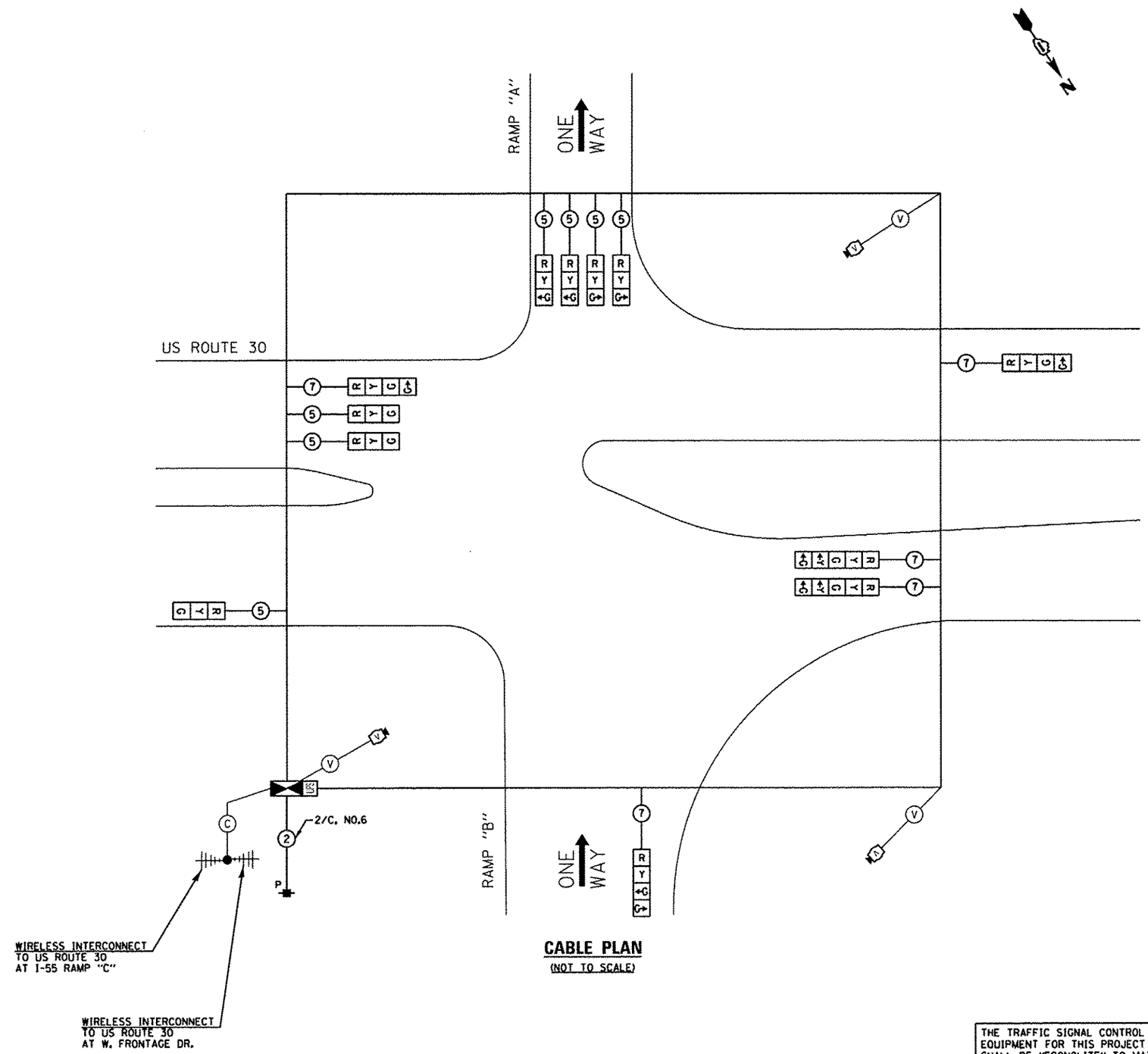

CABLE PLAN

(NOT TO SCALE)

THE TRAFFIC SIGNAL CONTROL EQUIPMENT FOR THIS PROJECT SHALL BE "ECONOLITE" TO MATCH THE EXISTING ADJACENT SYSTEM.

SINGH
SINGH + ASSOCIATES, INC.
CONSULTING ENGINEERS

USER NAME = _USER.	DESIGNED - MG	REVISED -
FILE NAME = D160W13-sht-ts14.dgn	DRAWN - VP/MG	REVISED -
PLOT SCALE = 20.0000 ' / in.	CHECKED - IY/KP	REVISED -
PLOT DATE = 12/17/2013	DATE - 12/17/2013	REVISED -

STATE OF ILLINOIS
DEPARTMENT OF TRANSPORTATION

TEMPORARY CABLE PLAN AND TEMPORARY PHASE DESIGNATION DIAGRAM
US ROUTE 30 AT RAMPS A AND B

SCALE: NTS | SHEET 20 OF 33 SHEETS | STA. | TO STA.

F.A.P. RTE.	SECTION	COUNTY	TOTAL SHEETS	SHEET NO.
575	14-N	WILL	163	80
		CONTRACT NO. 60W13		
		ILLINOIS FED. AID PROJECT		

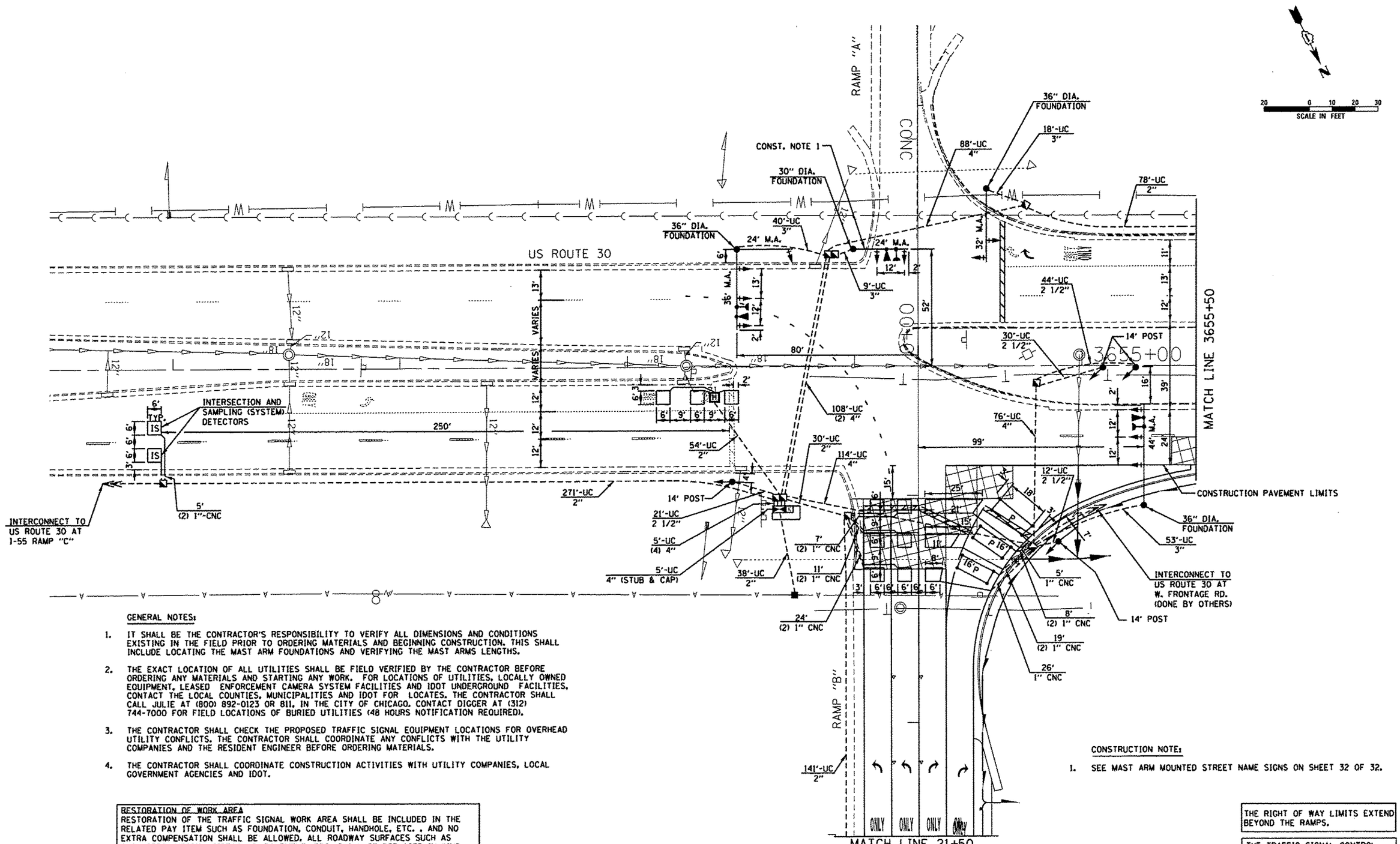

GENERAL NOTES:

1. IT SHALL BE THE CONTRACTOR'S RESPONSIBILITY TO VERIFY ALL DIMENSIONS AND CONDITIONS EXISTING IN THE FIELD PRIOR TO ORDERING MATERIALS AND BEGINNING CONSTRUCTION. THIS SHALL INCLUDE LOCATING THE MAST ARM FOUNDATIONS AND VERIFYING THE MAST ARMS LENGTHS.

2. THE EXACT LOCATION OF ALL UTILITIES SHALL BE FIELD VERIFIED BY THE CONTRACTOR BEFORE ORDERING ANY MATERIALS AND STARTING ANY WORK. FOR LOCATIONS OF UTILITIES, LOCALLY OWNED EQUIPMENT, LEASED ENFORCEMENT CAMERA SYSTEM FACILITIES AND IDOT UNDERGROUND FACILITIES, CONTACT THE LOCAL COUNTIES, MUNICIPALITIES AND IDOT FOR LOCATES. THE CONTRACTOR SHALL CALL JULIE AT (800) 892-0123 OR 811, IN THE CITY OF CHICAGO, CONTACT DIGGER AT (312) 744-7000 FOR FIELD LOCATIONS OF BURIED UTILITIES (48 HOURS NOTIFICATION REQUIRED).

3. THE CONTRACTOR SHALL CHECK THE PROPOSED TRAFFIC SIGNAL EQUIPMENT LOCATIONS FOR OVERHEAD UTILITY CONFLICTS. THE CONTRACTOR SHALL COORDINATE ANY CONFLICTS WITH THE UTILITY COMPANIES AND THE RESIDENT ENGINEER BEFORE ORDERING MATERIALS.

4. THE CONTRACTOR SHALL COORDINATE CONSTRUCTION ACTIVITIES WITH UTILITY COMPANIES, LOCAL GOVERNMENT AGENCIES AND IDOT.

RESTORATION OF WORK AREA
RESTORATION OF THE TRAFFIC SIGNAL WORK AREA SHALL BE INCLUDED IN THE RELATED PAY ITEM SUCH AS FOUNDATION, CONDUIT, HANDHOLE, ETC. , AND NO EXTRA COMPENSATION SHALL BE ALLOWED. ALL ROADWAY SURFACES SUCH AS SHOULDERS, MEDIAN, SIDEWALKS, PAVEMENT, ETC. SHALL BE REPLACED IN KIND. ALL DAMAGE TO MOWED LAWNS SHALL BE REPLACED WITH AN APPROVED SOD, AND ALL DAMAGED TO UNMOWED FIELDS SHALL BE SEEDED IN ACCORDANCE WITH STANDARD SPECIFICATIONS 252 AND 250 RESPECTIVELY.

CONSTRUCTION NOTE:

1. SEE MAST ARM MOUNTED STREET NAME SIGNS ON SHEET 32 OF 32.

THE RIGHT OF WAY LIMITS EXTEND BEYOND THE RAMPS.

THE TRAFFIC SIGNAL CONTROL EQUIPMENT FOR THIS PROJECT SHALL BE "ECONOLITE" TO MATCH THE EXISTING ADJACENT SYSTEM.

SINGH
SINGH + ASSOCIATES, INC.
CONSULTING ENGINEERS

USER NAME = .USER.	DESIGNED - MG	REVISED -	
FILE NAME = D168W13-sht-ts15.dgn	DRAWN - VP/MG	REVISED -	
PLOT SCALE = 20.0000 ' / in.	CHECKED - JY/KP	REVISED -	
PLOT DATE = 12/17/2013	DATE - 12/17/2013	REVISED -	

STATE OF ILLINOIS
DEPARTMENT OF TRANSPORTATION

TRAFFIC SIGNAL INSTALLATION PLAN
US ROUTE 30 AT I-55 RAMPS A AND B

SCALE: 1"=20' | SHEET 21 OF 33 SHEETS | STA. 3650+75 TO STA. 3655+50

F.A.P. RTE.	SECTION	COUNTY	TOTAL SHEETS	SHEET NO.
575	14-N	WILL	163	81
		CONTRACT NO. 60W13		
		ILLINOIS FED. AID PROJECT		

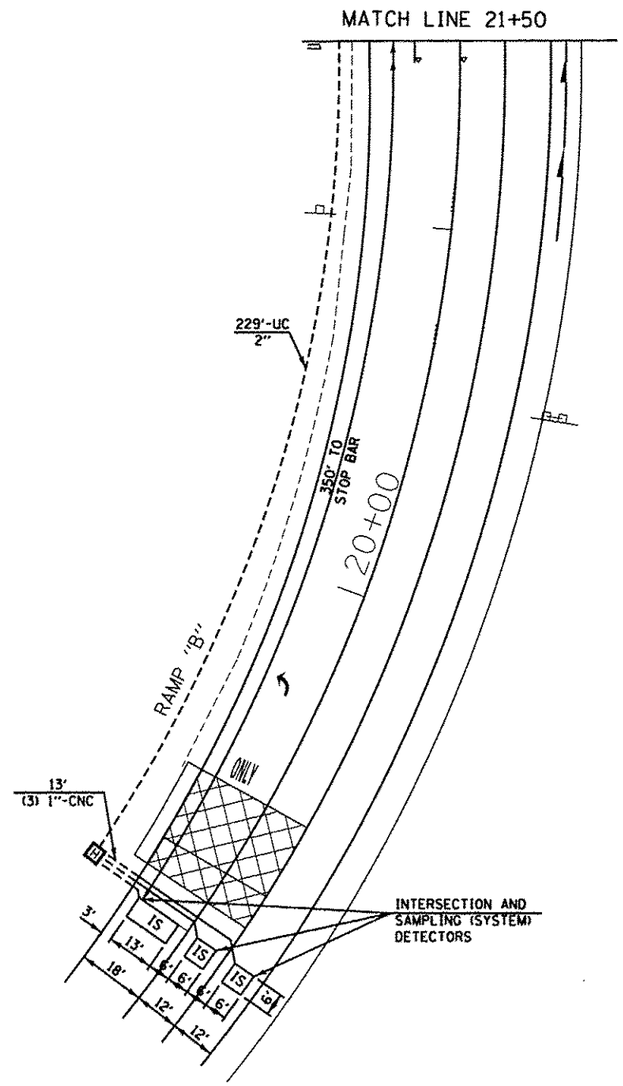

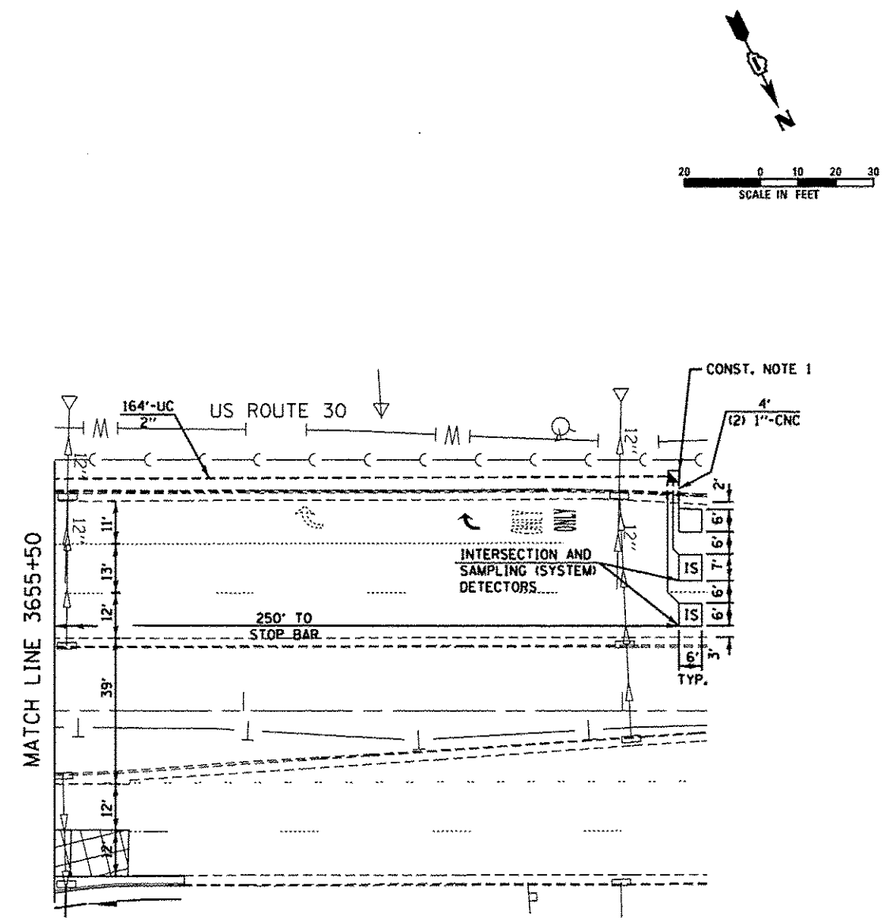

CONSTRUCTION NOTE:

1. PROVIDE A TOTAL OF 12' SLACK AT THE HANDHOLE FOR THE LEAD-IN, NO. 14 1 PAIR FOR FUTURE IMPROVEMENTS.

THE TRAFFIC SIGNAL CONTROL EQUIPMENT FOR THIS PROJECT SHALL BE "ECONOLITE" TO MATCH THE EXISTING ADJACENT SYSTEM.

SINGH + ASSOCIATES, INC. CONSULTING ENGINEERS	USER NAME = .USER.	DESIGNED - MG	REVISED -	STATE OF ILLINOIS DEPARTMENT OF TRANSPORTATION	TRAFFIC SIGNAL INSTALLATION PLAN US ROUTE 30 AT I-55 RAMPS A AND B	F.A.P. RTE.	SECTION	COUNTY	TOTAL SHEETS	SHEET NO.
	FILE NAME = 0160W13-sht-ts16.dgn	DRAWN - VP/MG	REVISED -			575	14-N	WILL	163	82
	PLOT SCALE = 20.0000 ' / in.	CHECKED - TY/KP	REVISED -					CONTRACT NO. 60W13		
	PLOT DATE = 12/17/2013	DATE - 12/17/2013	REVISED -		SCALE: 1"=20' SHEET 22 OF 33 SHEETS STA. TO STA.		ILLINOIS FED. AID PROJECT			

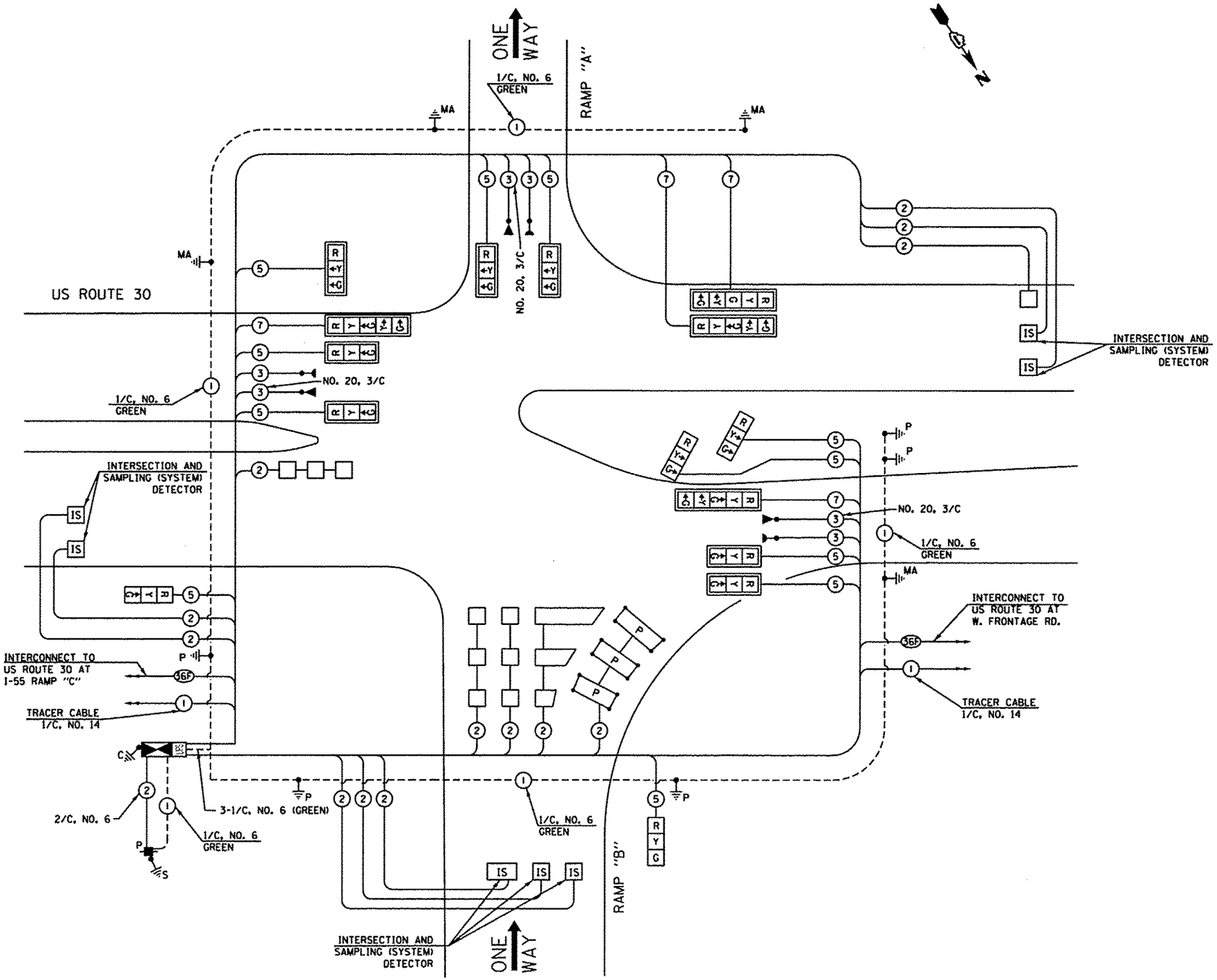

THE END OF THE TRACER CABLE SHALL BE CONTINUOUS AND EXTEND INTO THE CONTROLLER CABINET.

CABLE PLAN

(NOT TO SCALE)

I.D.O.T. TRAFFIC SIGNAL INSTALLATION ELECTRICAL SERVICE REQUIREMENTS					
TYPE	NO LAMPS	WATTAGE INCAND.	WATTAGE LED	% OPERATION	TOTAL WATTAGE
SIGNAL (RED)	17		17	0.50	144.50
(YELLOW)	17		25	0.25	106.25
(GREEN)	17		15	0.25	63.75
ARROW	8		12	0.10	9.60
PED. SIGNAL	-		25	1.00	-
CONTROLLER	1		100	1.00	100.0
ILLUM. SIGN	-		25	0.05	-
VIDEO SYSTEM	-	150		1.00	-
FLASHER				0.50	
ENERGY COSTS TO:				TOTAL =	424.10

CITY OF JOLIET
150 W. JEFFERSON STREET
JOLIET, ILLINOIS 60432

ENERGY SUPPLY CONTACT: GREGG TRIEMSTRA
PHONE: 815-724-5534
COMPANY: COMMONWEALTH EDISON

THE TRAFFIC SIGNAL CONTROL EQUIPMENT FOR THIS PROJECT SHALL BE "ECONOLITE" TO MATCH THE EXISTING ADJACENT SYSTEM.

SINGH
SINGH + ASSOCIATES, INC.
CONSULTING ENGINEERS

USER NAME = USER	DESIGNED - MG	REVISED -	
FILE NAME = D160W13-sht-tsl7.dgn	DRAWN - VP/MG	REVISED -	
PLOT SCALE = 20.0000 ' / in.	CHECKED - IY/KP	REVISED -	
PLOT DATE = 12/17/2013	DATE - 12/17/2013	REVISED -	

STATE OF ILLINOIS
DEPARTMENT OF TRANSPORTATION

CABLE PLAN
US ROUTE 30 AT RAMPS A AND B

SCALE: NTS | SHEET 23 OF 33 SHEETS | STA. | TO STA.

F.A.P. RTE.	SECTION	COUNTY	TOTAL SHEETS	SHEET NO.
575	14-N	WILL	163	83

CONTRACT NO. 60W13

ILLINOIS FED. AID PROJECT

SCHEDULE OF QUANTITIES

QUANTITY	UNIT	ITEM
7.5	SQ FT	SIGN PANEL - TYPE 1
1	EACH	SERVICE INSTALLATION - POLE MOUNTED
1005	FOOT	UNDERGROUND CONDUIT, GALVANIZED STEEL, 2" DIA.
107	FOOT	UNDERGROUND CONDUIT, GALVANIZED STEEL, 2½" DIA.
120	FOOT	UNDERGROUND CONDUIT, GALVANIZED STEEL, 3" DIA.
519	FOOT	UNDERGROUND CONDUIT, GALVANIZED STEEL, 4" DIA.
6	EACH	HANDHOLE
2	EACH	HEAVY-DUTY HANDHOLE
2	EACH	DOUBLE HANDHOLE
1	EACH	TRANSCEIVER-FIBER OPTIC
• 678	FOOT	ELECTRIC CABLE IN CONDUIT, SIGNAL NO. 14 3C
2310	FOOT	ELECTRIC CABLE IN CONDUIT, SIGNAL NO. 14 5C
1074	FOOT	ELECTRIC CABLE IN CONDUIT, SIGNAL NO. 14 7C
3772	FOOT	ELECTRIC CABLE IN CONDUIT, LEAD-IN, NO. 14 1 PAIR
58	FOOT	ELECTRIC CABLE IN CONDUIT, SERVICE, NO. 6 2C
842	FOOT	ELECTRIC CABLE IN CONDUIT, EQUIPMENT GROUNDING CONDUCTOR, NO. 6 1C
4	EACH	TRAFFIC SIGNAL POST, GALVANIZED STEEL 14 FT.
1	EACH	STEEL MAST ARM ASSEMBLY AND POLE 24 FT.
1	EACH	STEEL MAST ARM ASSEMBLY AND POLE 32 FT.
1	EACH	STEEL MAST ARM ASSEMBLY AND POLE 44 FT.
1	EACH	STEEL MAST ARM ASSEMBLY AND POLE WITH DUAL MAST ARMS, 24 FT. AND 36 FT.
16	FOOT	CONCRETE FOUNDATION, TYPE A
4	FOOT	CONCRETE FOUNDATION, TYPE C
10	FOOT	CONCRETE FOUNDATION, TYPE E 30-INCH DIAMETER
36	FOOT	CONCRETE FOUNDATION, TYPE E 36-INCH DIAMETER
7	EACH	SIGNAL HEAD, LED, 1-FACE, 3-SECTION, MAST ARM MOUNTED
4	EACH	SIGNAL HEAD, LED, 1-FACE, 3-SECTION, BRACKET MOUNTED
4	EACH	SIGNAL HEAD, LED, 1-FACE, 5-SECTION, MAST ARM MOUNTED
11	EACH	TRAFFIC SIGNAL BACKPLATE, LOUVERED, ALUMINUM
13	EACH	INDUCTIVE LOOP DETECTOR
826	FOOT	DETECTOR LOOP, TYPE I
145	FOOT	PREFORMED DETECTOR LOOP
• 3	EACH	LIGHT DETECTOR
• 1	EACH	LIGHT DETECTOR AMPLIFIER
1	EACH	TEMPORARY TRAFFIC SIGNAL INSTALLATION
1	EACH	REMOVE EXISTING TRAFFIC SIGNAL EQUIPMENT
8	EACH	REMOVE EXISTING HANDHOLE
1	EACH	REMOVE EXISTING DOUBLE HANDHOLE
7	EACH	REMOVE EXISTING CONCRETE FOUNDATION
• 678	FOOT	EMERGENCY VEHICLE PRIORITY SYSTEM LINE SENSOR CABLE, NO. 20 3/C
1	EACH	FULL-ACTUATED CONTROLLER AND TYPE IV CABINET, SPECIAL
1	EACH	UNINTERRUPTABLE POWER SUPPLY, SPECIAL
1	EACH	TEMPORARY TRAFFIC SIGNAL TIMING

• 100% COST TO CITY OF JOLIET

CONTROLLER SEQUENCE

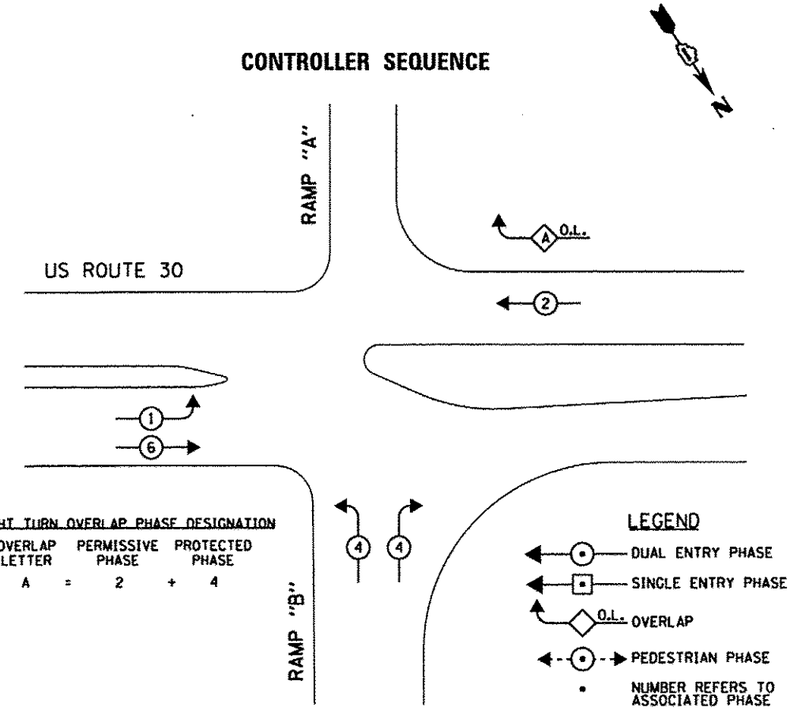

RIGHT TURN OVERLAP PHASE DESIGNATION

OVERLAP LETTER		PERMISSIVE PHASE		PROTECTED PHASE
A	=	2	+	4

PHASE DESIGNATION DIAGRAM

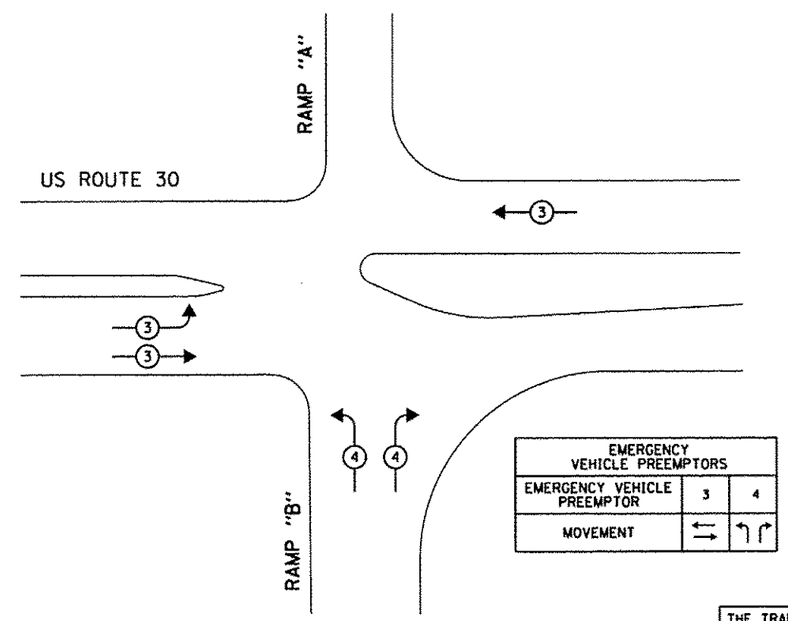

EMERGENCY VEHICLE PREEMPTORS		
EMERGENCY VEHICLE PREEMPTOR	3	4
MOVEMENT	⇆	↰ ↱

THE TRAFFIC SIGNAL CONTROL EQUIPMENT FOR THIS PROJECT SHALL BE "ECONOLITE" TO MATCH THE EXISTING ADJACENT SYSTEM.

SINGH + ASSOCIATES, INC. CONSULTING ENGINEERS

USER NAME = USER	DESIGNED - MG	REVISED -
FILE NAME = D160W13-sht-ts18.dgn	DRAWN - VP/MG	REVISED -
PLOT SCALE = 20.0000 ' / in.	CHECKED - IY/KP	REVISED -
PLOT DATE = 12/17/2013	DATE - 12/17/2013	REVISED -

STATE OF ILLINOIS
DEPARTMENT OF TRANSPORTATION

PHASE DESIGNATION DIAGRAM,
EMERGENCY VEHICLE PREEMPTION SEQUENCE OF OPERATIONS,
SCHEDULE OF QUANTITIES, US ROUTE 30 AT I-55 RAMPS A AND B

SCALE: NTS | SHEET 24 OF 33 SHEETS | STA. TO STA.

F.A.P. RTE.	SECTION	COUNTY	TOTAL SHEETS	SHEET NO.
575	14-N	WILL	163	84

CONTRACT NO. 60W13

ILLINOIS FED. AID PROJECT

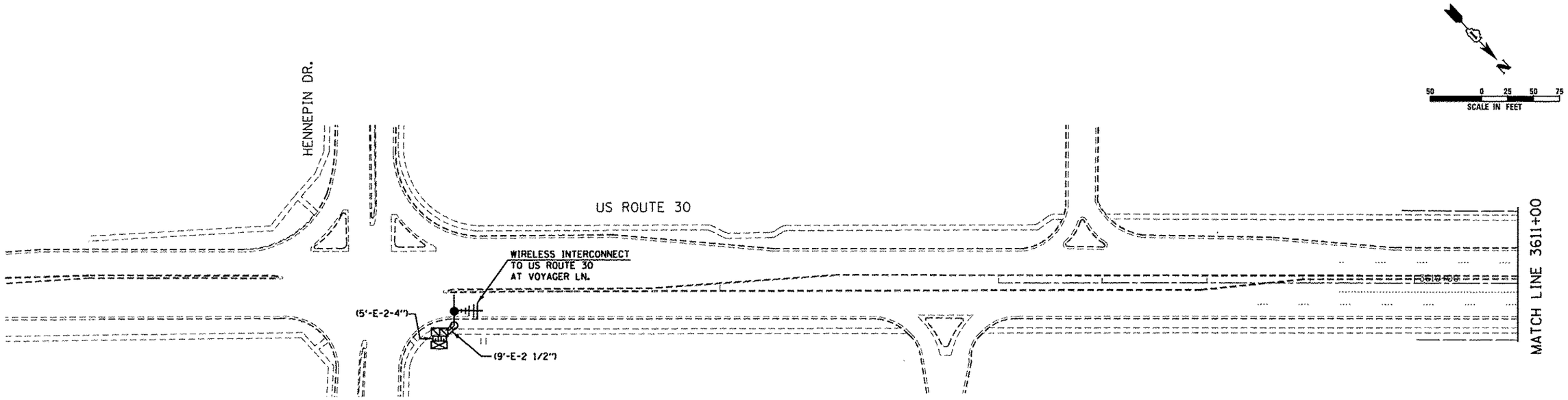

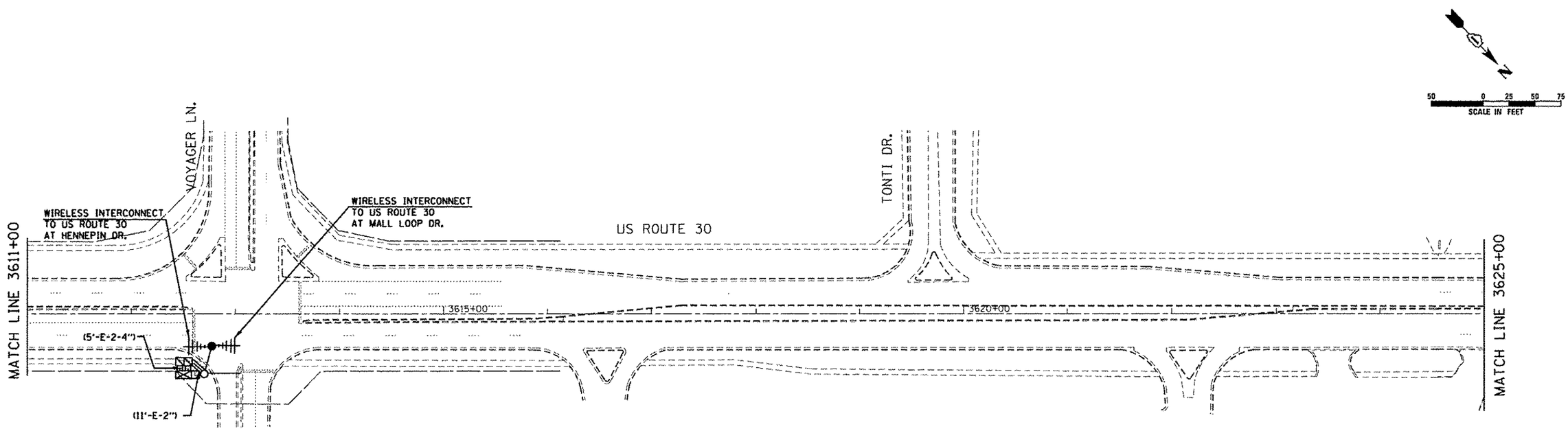

CONSTRUCTION NOTES:

1. R.O.W. INFORMATION EAST OF MALL LOOP DRIVE IS NOT SHOWN ON THE INTERCONNECT PLANS.

RESTORATION OF WORK AREA

RESTORATION OF THE TRAFFIC SIGNAL WORK AREA SHALL BE INCLUDED IN THE RELATED PAY ITEM SUCH AS FOUNDATION, CONDUIT, HANDHOLE, ETC. , AND NO EXTRA COMPENSATION SHALL BE ALLOWED. ALL ROADWAY SURFACES SUCH AS SHOULDERS, MEDIAN, SIDEWALKS, PAVEMENT, ETC. SHALL BE REPLACED IN KIND. ALL DAMAGE TO MOWED LAWNS SHALL BE REPLACED WITH AN APPROVED SOD, AND ALL DAMAGED TO UNMOWED FIELDS SHALL BE SEEDED IN ACCORDANCE WITH STANDARD SPECIFICATIONS 252 AND 250 RESPECTIVELY.

THE TRAFFIC SIGNAL CONTROL EQUIPMENT FOR THIS PROJECT SHALL BE "ECONOLITE" TO MATCH THE EXISTING ADJACENT SYSTEM.

SINGH
SINGH + ASSOCIATES, INC.
CONSULTING ENGINEERS

USER NAME = .USER.	DESIGNED - MG	REVISED -	
FILE NAME = D160W13-sht-tsl9.dgn	DRAWN - VP/MG	REVISED -	
PLOT SCALE = 50.0000 ' / in.	CHECKED - IY/KP	REVISED -	
PLOT DATE = 12/17/2013	DATE - 12/17/2013	REVISED -	

STATE OF ILLINOIS
DEPARTMENT OF TRANSPORTATION

TEMPORARY INTERCONNECT PLAN - US ROUTE 30
FROM HENNEPIN DR. TO WEST FRONTAGE RD.

SCALE: 1"=50' | SHEET 25 OF 33 SHEETS | STA. 3606+00 TO STA. 3625+00

F.A.P. RTE.	SECTION	COUNTY	TOTAL SHEETS	SHEET NO.
575	14-N	WILL	163	85

CONTRACT NO. 60W13

ILLINOIS FED. AID PROJECT

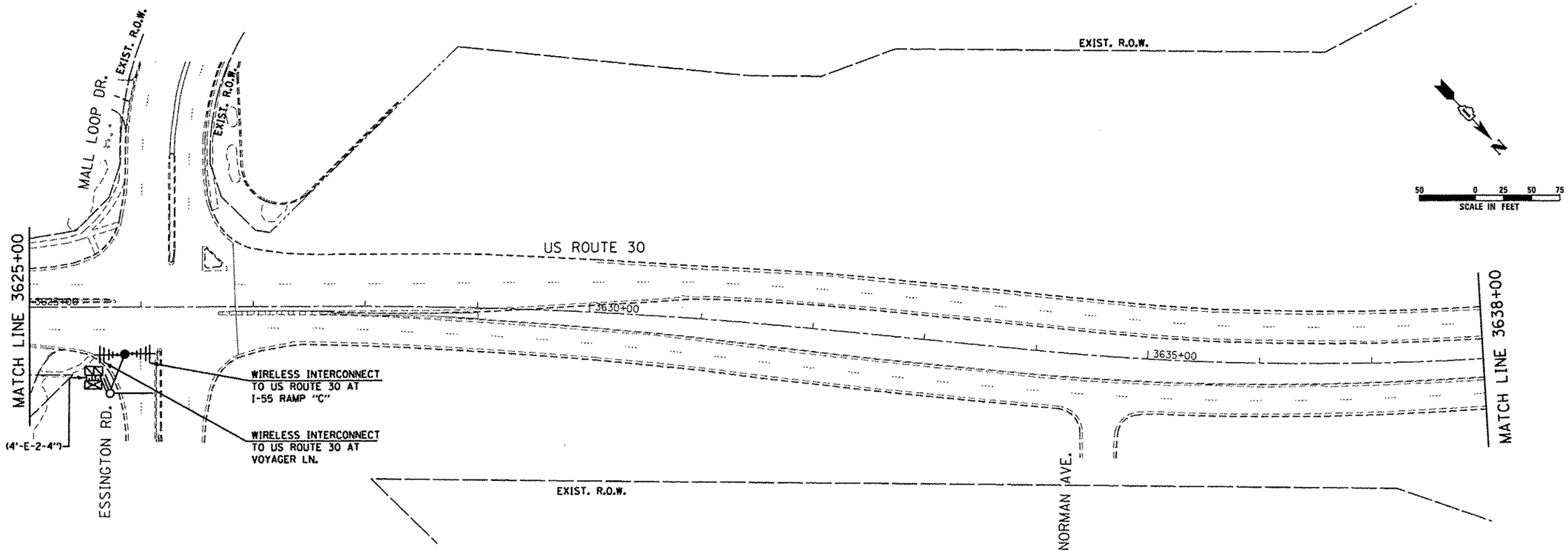

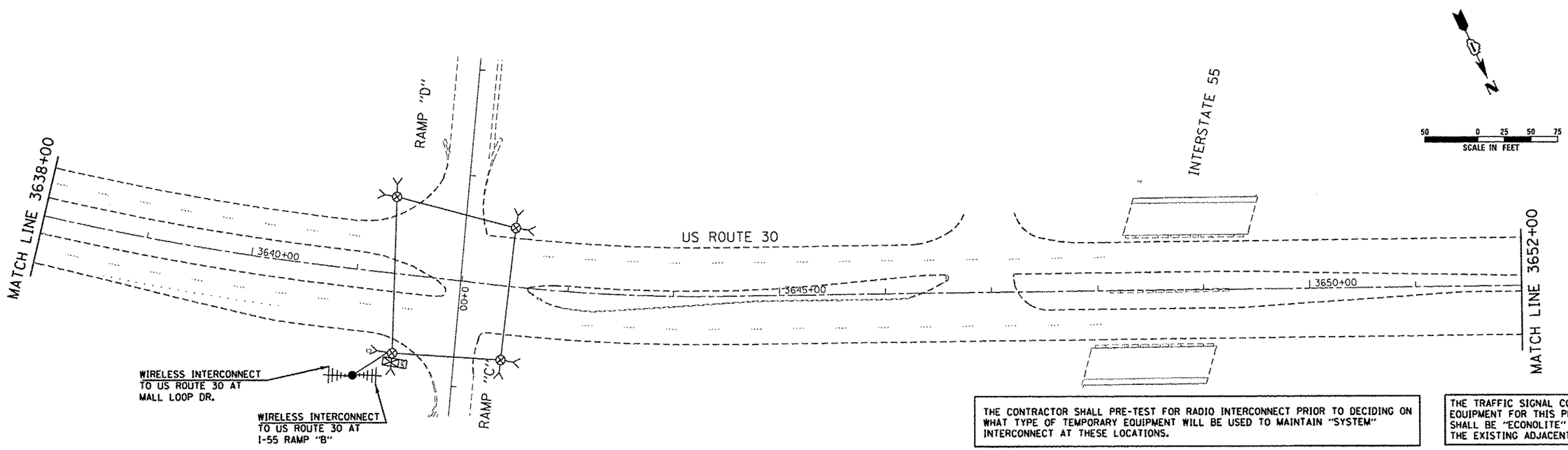

THE CONTRACTOR SHALL PRE-TEST FOR RADIO INTERCONNECT PRIOR TO DECIDING ON WHAT TYPE OF TEMPORARY EQUIPMENT WILL BE USED TO MAINTAIN "SYSTEM" INTERCONNECT AT THESE LOCATIONS.

THE TRAFFIC SIGNAL CONTROL EQUIPMENT FOR THIS PROJECT SHALL BE "ECONOLITE" TO MATCH THE EXISTING ADJACENT SYSTEM.

SINGH
SINGH + ASSOCIATES, INC.
CONSULTING ENGINEERS

USER NAME = _USER_	DESIGNED - MG	REVISED -	
FILE NAME = D160W13-sht-ts20.dgn	DRAWN - VP/MG	REVISED -	
PLOT SCALE = 50.0000 ' / in.	CHECKED - IY/KP	REVISED -	
PLOT DATE = 12/17/2013	DATE - 12/17/2013	REVISED -	

STATE OF ILLINOIS
DEPARTMENT OF TRANSPORTATION

TEMPORARY INTERCONNECT PLAN – US ROUTE 30
FROM HENNEPIN DR. TO WEST FRONTAGE RD.

SCALE: 1"=50' | SHEET 26 OF 33 SHEETS | STA. 3625+00 TO STA. 3652+00

F.A.P. RTE.	SECTION	COUNTY	TOTAL SHEETS	SHEET NO.
575	14-N	WILL	163	86
		CONTRACT NO. 60W13		
		ILLINOIS FED. AID PROJECT		

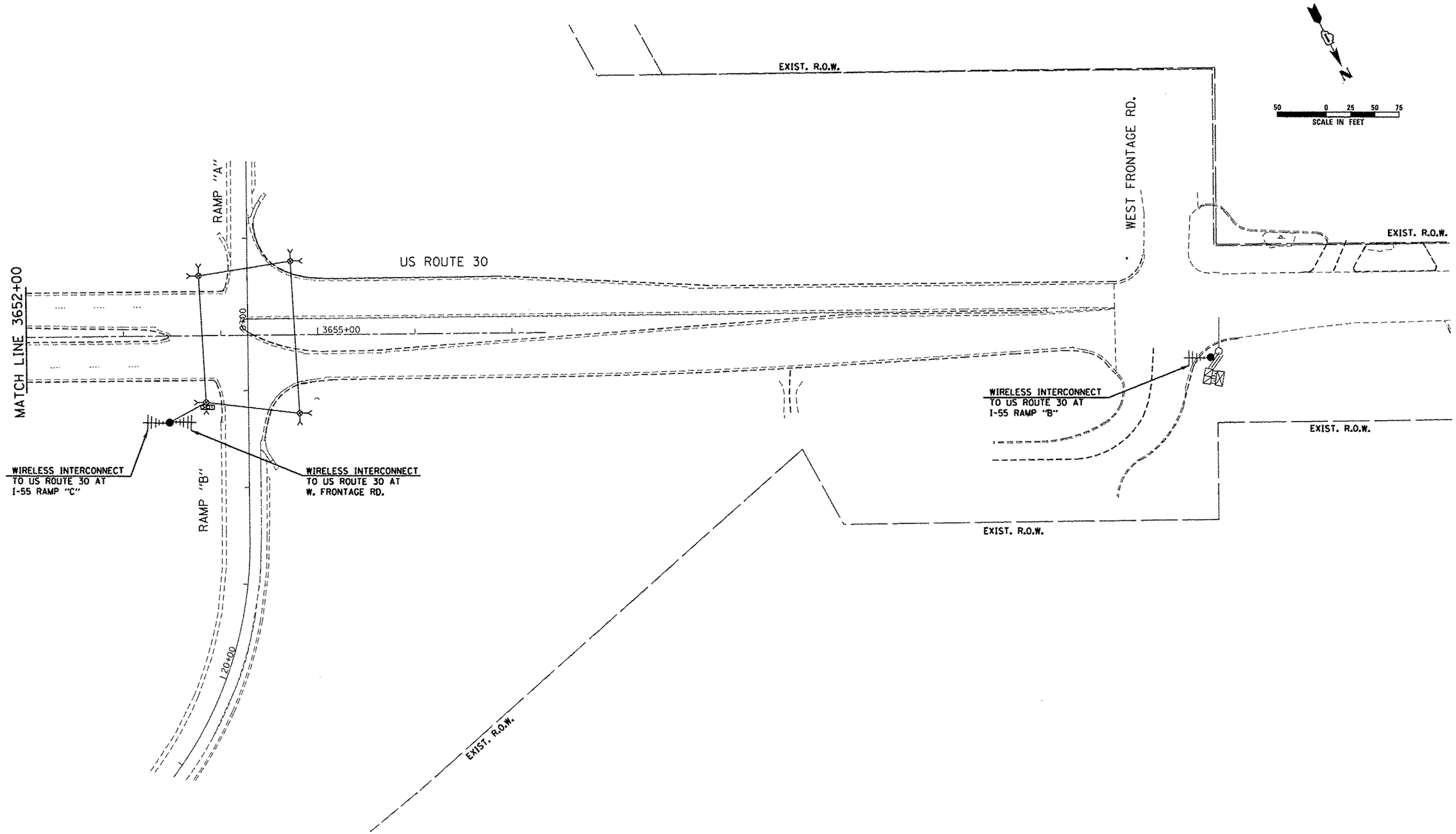

THE CONTRACTOR SHALL PRE-TEST FOR RADIO INTERCONNECT PRIOR TO DECIDING ON WHAT TYPE OF TEMPORARY EQUIPMENT WILL BE USED TO MAINTAIN "SYSTEM" INTERCONNECT AT THESE LOCATIONS.

THE TRAFFIC SIGNAL CONTROL EQUIPMENT FOR THIS PROJECT SHALL BE "ECONOLITE" TO MATCH THE EXISTING ADJACENT SYSTEM.

SINGH
SINGH + ASSOCIATES, INC.
CONSULTING ENGINEERS

USER NAME = _USER_	DESIGNED - MG	REVISED -
FILE NAME = D160W13-sht-ts21.dgn	DRAWN - VP/MG	REVISED -
PLOT SCALE = 50.0000 ' / in.	CHECKED - IY/KP	REVISED -
PLOT DATE = 12/17/2013	DATE - 12/17/2013	REVISED -

STATE OF ILLINOIS
DEPARTMENT OF TRANSPORTATION

TEMPORARY INTERCONNECT PLAN – US ROUTE 30
FROM HENNEPIN DR. TO WEST FRONTAGE RD.

SCALE: 1"=50' | SHEET 27 OF 33 SHEETS | STA. 3652+00 TO STA. 3657+00

F.A.P. RTE.	SECTION	COUNTY	TOTAL SHEETS	SHEET NO.
575	14-N	WILL	163	87

CONTRACT NO. 60W13

ILLINOIS FED. AID PROJECT

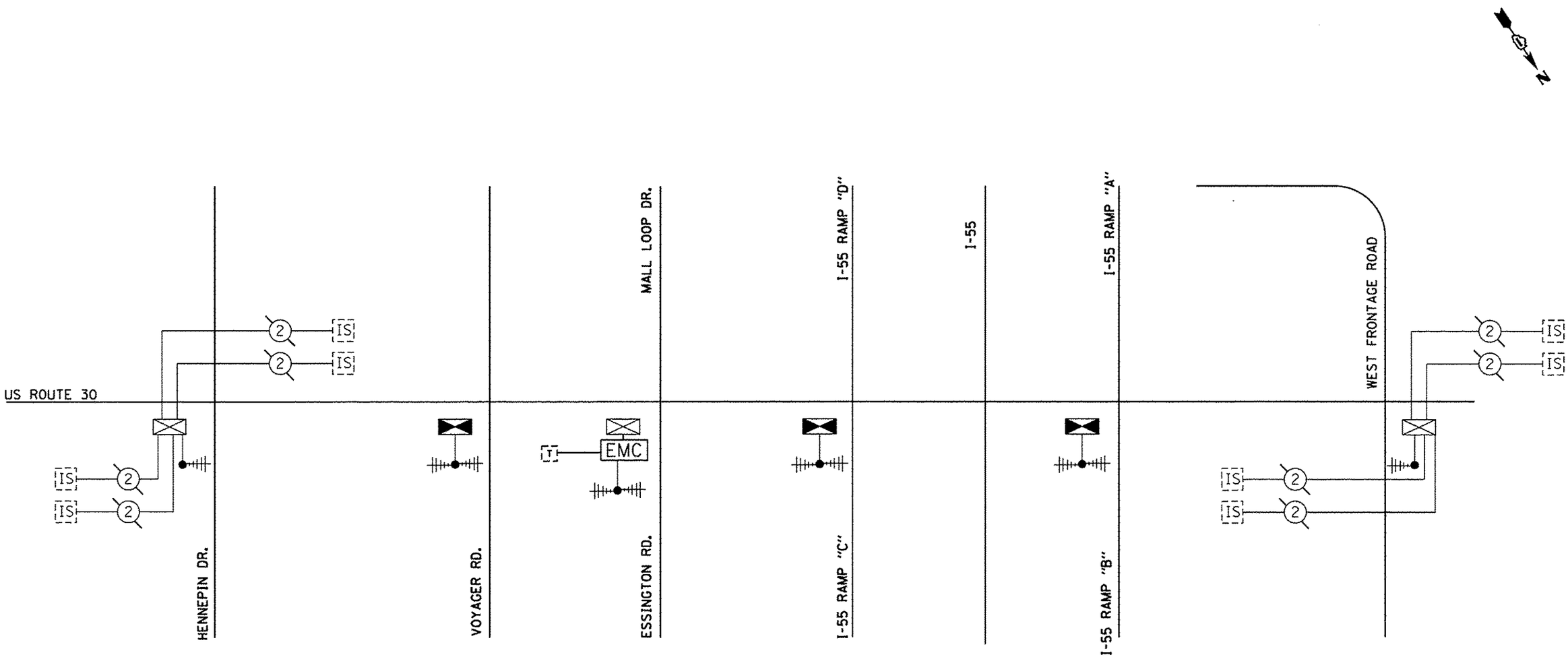

THE TRAFFIC SIGNAL CONTROL EQUIPMENT FOR THIS PROJECT SHALL BE "ECONOLITE" TO MATCH THE EXISTING ADJACENT SYSTEM.

SINGH
SINGH + ASSOCIATES, INC.
CONSULTING ENGINEERS

USER NAME = .USER.	DESIGNED - MG	REVISED -	
FILE NAME = D160W13-sht-ts22.dgn	DRAWN - VP/MG	REVISED -	
PLOT SCALE = 20.0000 ' / in.	CHECKED - IY/KP	REVISED -	
PLOT DATE = 12/17/2013	DATE - 12/17/2013	REVISED -	

STATE OF ILLINOIS
DEPARTMENT OF TRANSPORTATION

TEMPORARY INTERCONNECT SCHEMATIC PLAN – US ROUTE 30
HENNEPIN DR. TO WEST FRONTAGE RD.

SCALE: NTS | SHEET 28 OF 33 SHEETS | STA. TO STA.

F.A.P. RTE.	SECTION	COUNTY	TOTAL SHEETS	SHEET NO.
575	14-N	WILL	163	88

CONTRACT NO. 60W13

ILLINOIS FED. AID PROJECT

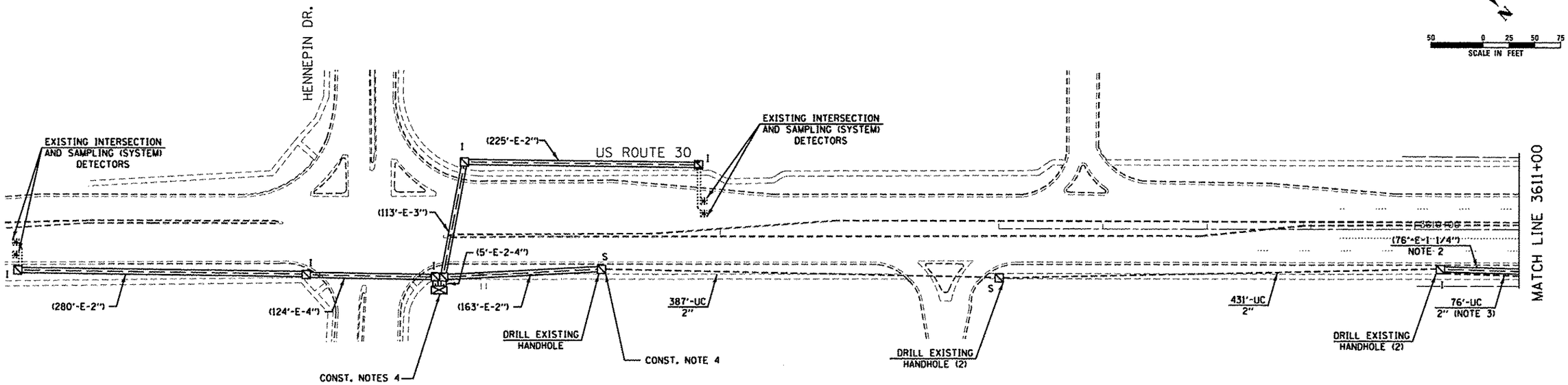

CONSTRUCTION NOTES:

1. R.O.W. INFORMATION EAST OF MALL LOOP DRIVE IS NOT SHOWN ON THE INTERCONNECT PLANS.
2. THE EXISTING CONDUIT FROM THE HANDHOLE TO THE DOUBLE HANDHOLE WILL REMAIN IN PLACE AS THIS IS BEING USED FOR THE DETECTOR LOOP CABLES.
3. EXTRA CAUTION DURING THE INSTALLATION OF THE CONDUIT SHALL BE APPLIED AS TO NOT DAMAGE THE EXISTING CONDUIT RUNNING ALONG SIDE THE PROPOSED CONDUIT.
4. DISCONNECT THE EXISTING INTERCONNECT CABLE (NO. 18 3 PAIR, TWISTED, SHIELDED) AT THE EXISTING CONTROLLER. REMOVE EXISTING INTERCONNECT CABLE FROM THE EXISTING CONTROLLER TO EXISTING HANDHOLE.

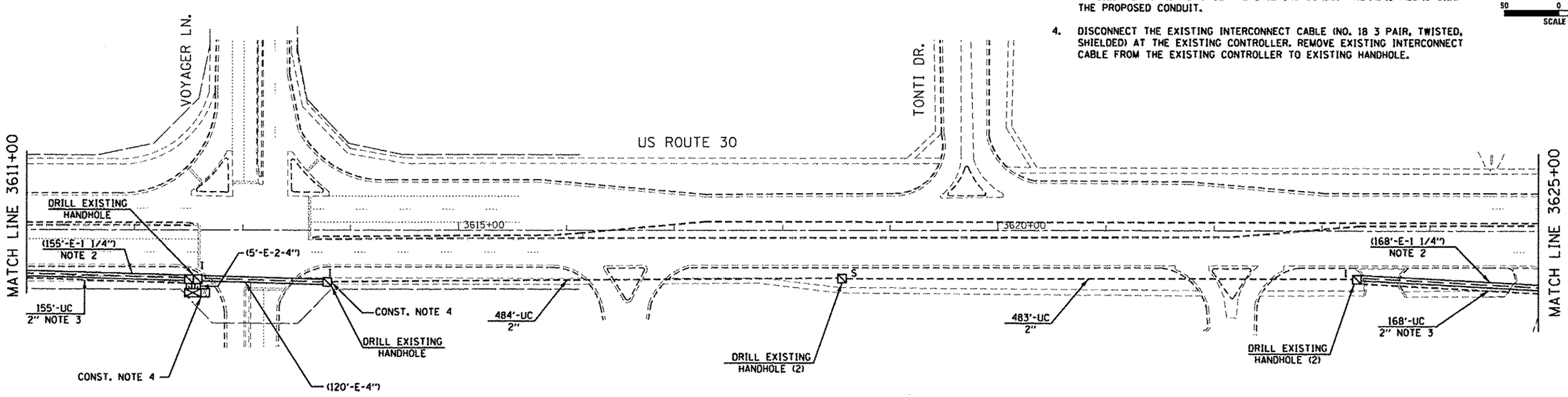

THE TRAFFIC SIGNAL CONTROL EQUIPMENT FOR THIS PROJECT SHALL BE "ECONOLITE" TO MATCH THE EXISTING ADJACENT SYSTEM.

SINGH
SINGH + ASSOCIATES, INC.
CONSULTING ENGINEERS

USER NAME = USER	DESIGNED - MG	REVISED -	
FILE NAME = D160W13-sht-ts23.dgn	DRAWN - VP/MG	REVISED -	
PLOT SCALE = 50.0000 ' / in.	CHECKED - IY/KP	REVISED -	
PLOT DATE = 12/17/2013	DATE - 12/17/2013	REVISED -	

STATE OF ILLINOIS
DEPARTMENT OF TRANSPORTATION

INTERCONNECT PLAN – US ROUTE 30
FROM HENNEPIN DR. TO WEST FRONTAGE RD.

SCALE: 1"=50' | SHEET 29 OF 33 SHEETS | STA. 3606+00 TO STA. 3625+00

F.A.P. RTE.	SECTION	COUNTY	TOTAL SHEETS	SHEET NO.
575	14-N	WILL	163	89

CONTRACT NO. 60W13

ILLINOIS FED. AID PROJECT

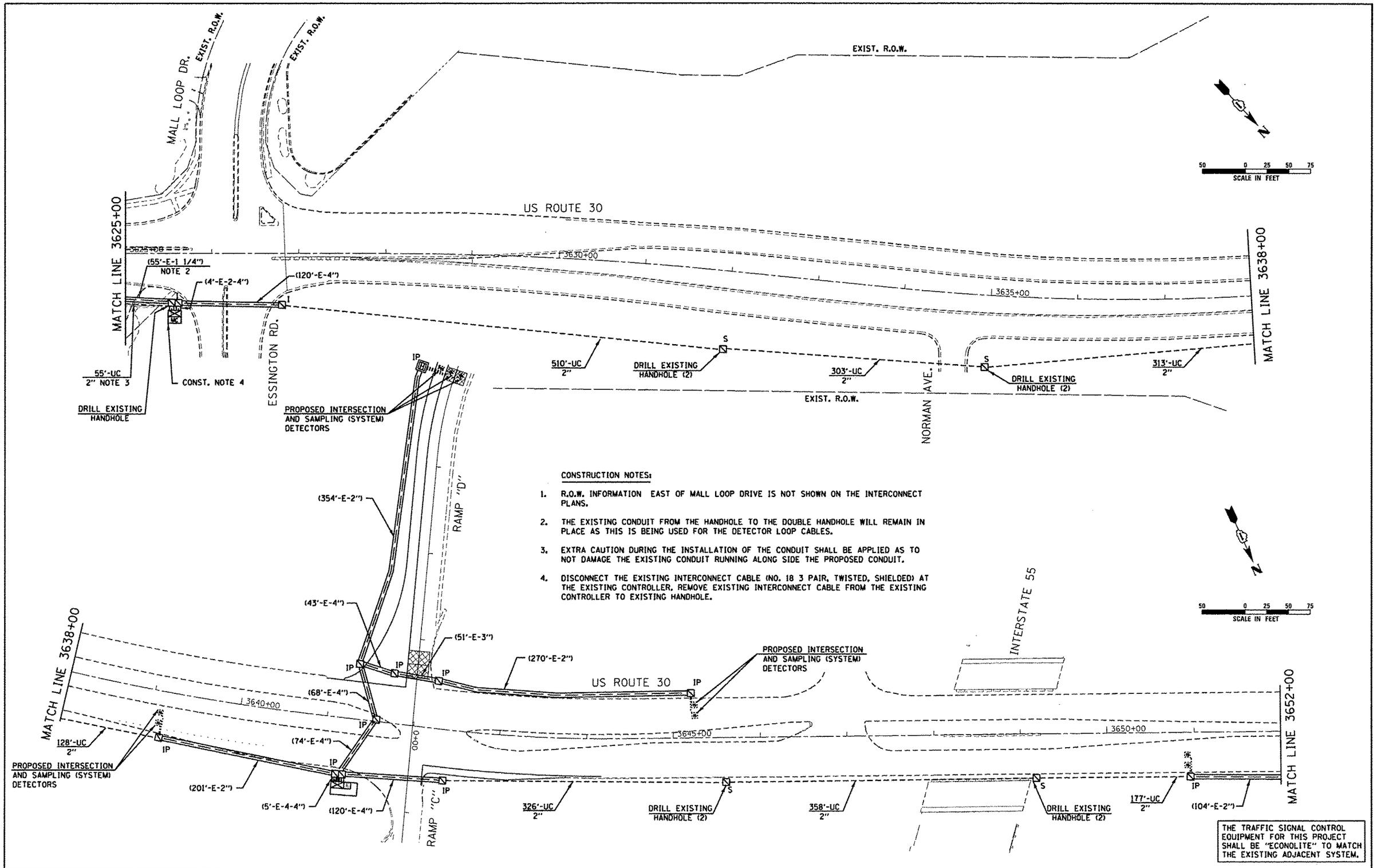

CONSTRUCTION NOTES:

1. R.O.W. INFORMATION EAST OF MALL LOOP DRIVE IS NOT SHOWN ON THE INTERCONNECT PLANS.
2. THE EXISTING CONDUIT FROM THE HANDHOLE TO THE DOUBLE HANDHOLE WILL REMAIN IN PLACE AS THIS IS BEING USED FOR THE DETECTOR LOOP CABLES.
3. EXTRA CAUTION DURING THE INSTALLATION OF THE CONDUIT SHALL BE APPLIED AS TO NOT DAMAGE THE EXISTING CONDUIT RUNNING ALONG SIDE THE PROPOSED CONDUIT.
4. DISCONNECT THE EXISTING INTERCONNECT CABLE (NO. 18 3 PAIR, TWISTED, SHIELDED) AT THE EXISTING CONTROLLER. REMOVE EXISTING INTERCONNECT CABLE FROM THE EXISTING CONTROLLER TO EXISTING HANDHOLE.

THE TRAFFIC SIGNAL CONTROL EQUIPMENT FOR THIS PROJECT SHALL BE "ECONOLITE" TO MATCH THE EXISTING ADJACENT SYSTEM.

SINGH
SINGH + ASSOCIATES, INC.
CONSULTING ENGINEERS

USER NAME = _USER_	DESIGNED - MG	REVISED -	
FILE NAME = D160W13-sht-ts24.dgn	DRAWN - VP/MG	REVISED -	
PLOT SCALE = 50.0000 ' / in.	CHECKED - IY/KP	REVISED -	
PLOT DATE = 12/17/2013	DATE - 12/17/2013	REVISED -	

STATE OF ILLINOIS
DEPARTMENT OF TRANSPORTATION

INTERCONNECT PLAN – US ROUTE 30
FROM HENNEPIN DR. TO WEST FRONTAGE RD.

SCALE: 1"=50' | SHEET 30 OF 33 SHEETS | STA. 3625+00 TO STA. 3652+00

F.A.P. RTE.	SECTION	COUNTY	TOTAL SHEETS	SHEET NO.
575	14-N	WILL	163	90

CONTRACT NO. 60W13

ILLINOIS FED. AID PROJECT

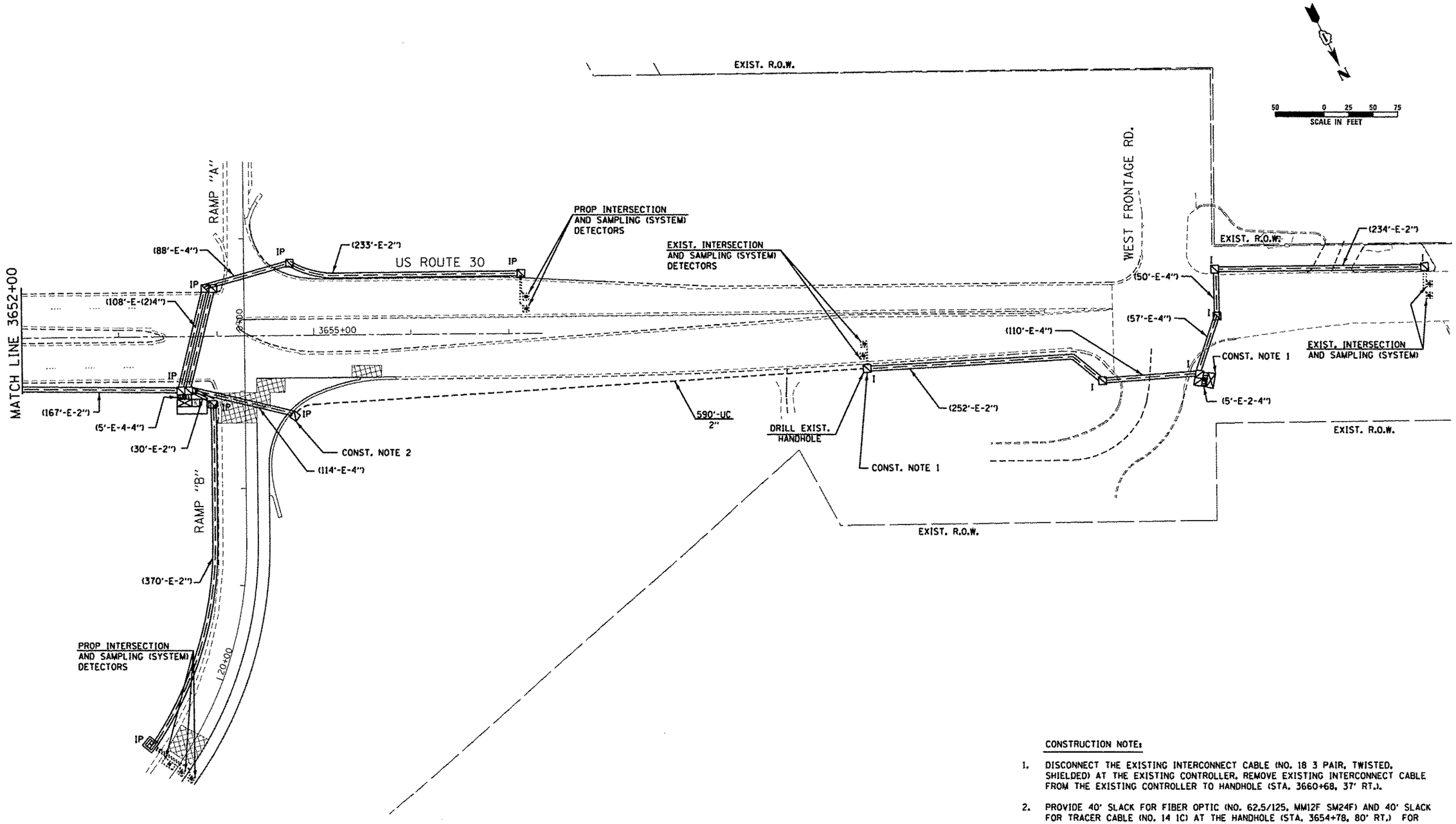

CONSTRUCTION NOTE:

1. DISCONNECT THE EXISTING INTERCONNECT CABLE (NO. 18 3 PAIR, TWISTED, SHIELDED) AT THE EXISTING CONTROLLER. REMOVE EXISTING INTERCONNECT CABLE FROM THE EXISTING CONTROLLER TO HANDHOLE (STA. 3660+68, 37' RT.).

2. PROVIDE 40' SLACK FOR FIBER OPTIC (NO. 62.5/125, MM12F SM24F) AND 40' SLACK FOR TRACER CABLE (NO. 14 IC) AT THE HANDHOLE (STA. 3654+78, 80' RT.) FOR FUTURE TRAFFIC SIGNAL IMPROVEMENTS AT THE INTERSECTION OF US 30 AT FRONTAGE ROAD.

THE TRAFFIC SIGNAL CONTROL EQUIPMENT FOR THIS PROJECT SHALL BE "ECONOLITE" TO MATCH THE EXISTING ADJACENT SYSTEM.

SINGH
SINGH + ASSOCIATES, INC.
CONSULTING ENGINEERS

USER NAME = _USER_	DESIGNED - MG	REVISED -	
FILE NAME = D160W13-sht-ts25.dgn	DRAWN - VP/MG	REVISED -	
PLOT SCALE = 50.0000 ' / in.	CHECKED - IY/KP	REVISED -	
PLOT DATE = 12/17/2013	DATE - 12/17/2013	REVISED -	

STATE OF ILLINOIS
DEPARTMENT OF TRANSPORTATION

INTERCONNECT PLAN – US ROUTE 30
FROM HENNEPIN DR. TO WEST FRONTAGE RD.

SCALE: 1"=50' | SHEET 31 OF 33 SHEETS | STA. 3652+00 TO STA. 3657+00

F.A.P. RTE.	SECTION	COUNTY	TOTAL SHEETS	SHEET NO.
575	14-N	WILL	163	91

CONTRACT NO. 60W13

ILLINOIS FED. AID PROJECT

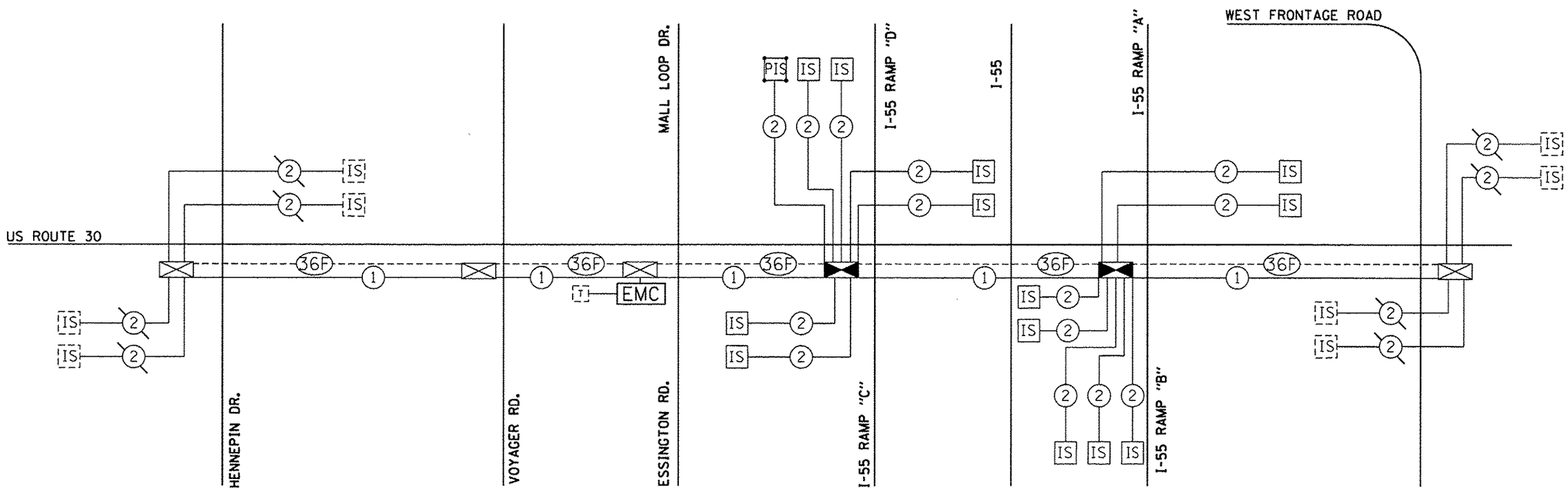

SCHEDULE OF INTERCONNECT QUANTITIES

QUANTITY	UNIT	ITEM
4909	FOOT	UNDERGROUND CONDUIT, GALVANIZED STEEL, 2" DIA.
3	EACH	MAINTENANCE OF EXISTING TRAFFIC SIGNAL INSTALLATION
4	EACH	TRANSCEIVER-FIBER OPTIC
6776	FOOT	ELECTRIC CABLE IN CONDUIT, TRACER NO. 14 IC
22	EACH	DRILL EXISTING HANDHOLE
872	FOOT	REMOVE ELECTRIC CABLE FROM CONDUIT
6895	FOOT	FIBER OPTIC CABLE IN CONDUIT, NO. 62.5/125, MM12F SM24F
1	EACH	OPTIMIZE TRAFFIC SIGNAL SYSTEM

THE TRAFFIC SIGNAL CONTROL EQUIPMENT FOR THIS PROJECT SHALL BE "ECONOLITE" TO MATCH THE EXISTING ADJACENT SYSTEM.

SINGH
SINGH + ASSOCIATES, INC.
CONSULTING ENGINEERS

USER NAME = _USER_	DESIGNED - MG	REVISED -	
FILE NAME = 0160W13-sht-ts26.dgn	DRAWN - VP/MG	REVISED -	
PLOT SCALE = 20.0000 ' / in.	CHECKED - IY/KP	REVISED -	
PLOT DATE = 12/17/2013	DATE - 12/17/2013	REVISED -	

STATE OF ILLINOIS
DEPARTMENT OF TRANSPORTATION

INTERCONNECT SCHEMATIC PLAN - US ROUTE 30
HENNEPIN DR. TO WEST FRONTAGE RD.

SCALE: NTS | SHEET 32 OF 33 SHEETS | STA. TO STA.

F.A.P. RTE.	SECTION	COUNTY	TOTAL SHEETS	SHEET NO.
575	14-N	WILL	163	92
		CONTRACT NO. 60W13		
		ILLINOIS FED. AID PROJECT		

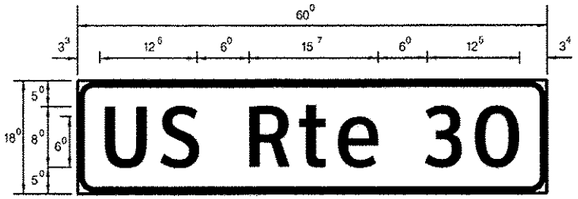

_-_ Sq. M. each

_7.5_ Sq. Ft. each

_2_ Required

Design Series _D_

SUPPORTING CHANNELS

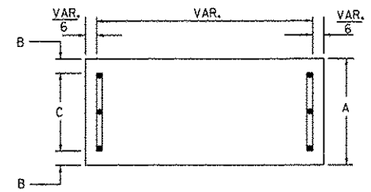

A	B	C
18"	2"	14"

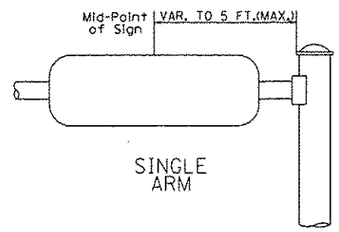

SUPPORTING CHANNELS

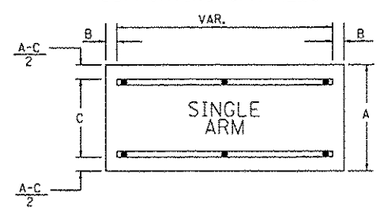

A	B	C
18"	2"	12"
30"	2"	22"

GENERAL NOTES

1. WHERE MAST ARM MOUNTED STREET NAME SIGNS ARE SPECIFIED, THE MAST ARM ASSEMBLY AND POLES SHALL BE DESIGNED TO SUPPORT THE LOADINGS CALLED FOR ON STANDARDS 834001, 834006 AND 834011, AS APPLICABLE, PLUS TWO (2) SIGN PANELS 2'-6" x 6'-0" MOUNTED AS SHOWN. THE DESIGN SHALL BE IN ACCORDANCE WITH THE REQUIREMENTS OF THE CURRENT "STANDARD SPECIFICATIONS FOR STRUCTURAL SUPPORTS FOR HIGHWAY SIGNS, LUMINAIRES, AND TRAFFIC SIGNALS" AS PUBLISHED BY THE AMERICAN ASSOCIATION OF STATE HIGHWAY AND TRANSPORTATION OFFICIALS FOR 80 M.P.H. WIND VELOCITY.
2. ALL SIGNS SHALL HAVE A WHITE REFLECTORIZED LEGEND AND BORDER ON A GREEN REFLECTORIZED BACKGROUND, TYPE A SHEETING.
3. THE SIGN LENGTH SHOULD BE INCREASED IN 6-INCH INCREMENTS, BUT THE OVERALL LENGTH SHOULD NOT EXCEED 6'-0".
4. ALL BORDERS SHALL BE ¾" WIDE AND CORNER RADIUS SHALL BE 2-1/4 ".
5. SIGNFIX ALUMINUM CHANNEL FRAMING SYSTEM SHALL BE USED FOR ALL SIGNS ATTACHED TO SIGNAL POLES AND POSTS. LOCAL SUPPLIERS OF THE SIGNFIX ALUMINUM CHANNEL FRAMING SYSTEM ARE:
   - * A.K.T. CORPORATION, SCHAUMBURG, IL
   - * TUCKER COMPANY, INC., WAUWATOSA, WI
   - * AMERICAN FABRICATION CO., CHICAGO HEIGHTS, IL
   - * WESTERN TRAFFIC CONTROL INC., CICERO, IL

PARTS LISTING:

SIGN CHANNEL	PART #HPN053 (MED. CHANNEL)
SIGN SCREWS	¼" x 14 x 1" H.W.H. #3 SELF TAPPING WITH NEOPRENE WASHER
BRACKETS	PART #HPN034 (UNIVERSAL) CHANNEL CLAMPS WITH STAINLESS STEEL STRAPPING

OTHER BRANDS OF MOUNTING HARDWARE ARE ACCEPTABLE, BASED UPON THE DEPARTMENT'S APPROVAL AND COMPATIBILITY WITH THE CHANNEL/BRACKET OF THE ABOVE PRODUCT.

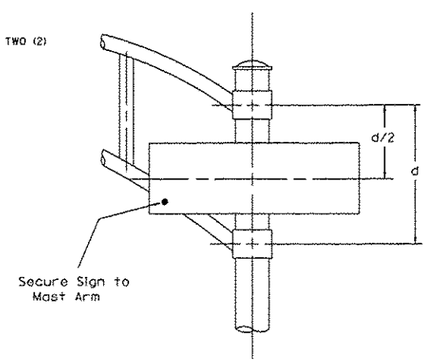

SIGNFIX ALUMINUM CHANNEL FRAMING SYSTEM

Shall be used. See Note #5.

Upper Case To Lower Case

Spacing Chart 8-6 Inch Series "C & D"

EXAMPLE. 2③ — DENOTES 3/8"

FIRST LETTER	SECOND LETTER: a c d e g o q		b h i k l m n p r u		f w		j		s t		v y		x		z	
SERIES	C	D	C	D	C	D	C	D	C	D	C	D	C	D	C	D
A W X	1^2	1^4	1^4	1^5	1^2	1^4	0^6	1^0	1^1	1^4	0^6	1^0	1^1	1^2	1^2	1^4
B	1^4	1^5	2^0	2^1	1^4	1^5	1^1	1^2	1^4	1^5	1^2	1^4	1^2	1^4	1^6	1^7
C E G	1^4	1^5	2^0	2^1	1^2	1^4	0^6	1^0	1^2	1^4	1^2	1^4	1^4	1^5	1^4	1^5
D O Q R	1^4	1^5	2^0	2^1	1^4	1^5	0^6	1^0	1^2	1^4	1^2	1^4	1^4	1^5	1^4	1^5
F	0^5	0^6	1^4	1^5	0^6	1^0	0^5	0^6	0^6	1^0	0^6	1^0	0^6	1^0	1^1	1^2
H I M N	2^0	2^1	2^2	2^4	2^0	2^1	1^4	1^5	1^6	1^7	1^6	1^7	2^0	2^1	2^0	2^1
J U	2^0	2^1	2^0	2^1	1^6	1^7	1^4	1^5	1^6	1^7	1^6	1^7	1^6	1^7	2^0	2^1
K L	1^1	1^2	1^6	1^7	1^1	1^2	0^5	0^6	1^1	1^2	1^1	1^2	1^1	1^2	1^2	1^4
P	1^2	1^4	1^4	1^5	1^2	1^4	0^5	0^6	1^1	1^2	1^1	1^2	1^2	1^4	1^2	1^4
S	1^2	1^4	1^6	1^7	1^2	1^4	0^6	1^0	1^2	1^4	1^2	1^4	1^2	1^4	1^2	1^4
T	1^1	1^2	1^6	1^7	0^6	1^0	0^6	1^0	1^1	1^2	1^1	1^2	1^1	1^2	1^2	1^4
V	0^6	1^0	1^4	1^5	1^1	1^2	0^6	1^0	1^2	1^4	1^2	1^4	1^2	1^4	1^2	1^4
Y	0^5	0^6	1^4	1^5	0^6	1^0	0	0^6	0^5	0^7	0^5	0^6	0^6	1^0	1^1	1^2
Z	1^6	1^7	2^2	2^4	1^6	1^7	1^2	1^4	1^6	1^7	1^6	1^7	1^6	1^7	2^0	2^1

Lower Case To Lower Case

Spacing Chart 6 Inch Series "C & D"

FIRST LETTER	SECOND LETTER: a c d e g o q		b h i k l m n p r u		f w		j		s t		v y		x		z	
SERIES	C	D	C	D	C	D	C	D	C	D	C	D	C	D	C	D
a d h g i j l m n q u	1^6	1^7	2^2	2^4	1^6	1^7	1^2	1^4	1^4	1^5	1^4	1^5	1^6	1^7	1^6	1^7
b f k o p s	1^2	1^4	1^6	1^7	1^1	1^2	0^5	0^6	1^1	1^2	1^1	1^2	1^2	1^4	1^2	1^4
c e	1^2	1^4	1^6	1^7	1^2	1^4	0^6	1^0	1^2	1^4	1^2	1^4	1^2	1^4	1^2	1^4
r	0^6	1^0	1^2	1^4	0^6	1^0	0^3	0^3	0^5	0^6	0^5	0^6	0^6	1^0	0^6	1^0
t z	1^2	1^4	1^6	1^7	1^2	1^4	0^6	1^0	1^1	1^2	1^1	1^2	1^2	1^4	1^2	1^4
v y	1^1	1^2	1^4	1^5	1^1	1^2	0^5	0^6	0^6	1^0	0^6	1^0	1^1	1^2	1^1	1^2
w	1^1	1^2	1^4	1^5	1^1	1^2	0^5	0^6	1^1	1^2	1^1	1^2	1^1	1^2	1^2	1^4
x	1^2	1^4	1^6	1^7	1^1	1^2	0^5	0^6	1^1	1^2	1^1	1^2	1^1	1^2	1^2	1^4

Number To Number

Spacing Chart 8 Inch Series "C & D"

FIRST NUMBER	SECOND NUMBER: 0		1		2		3		4		5		6		7		8		9	
SERIES	C	D	C	D	C	D	C	D	C	D	C	D	C	D	C	D	C	D	C	D
0 9	1^6	1^7	1^6	1^7	1^4	1^5	1^2	1^4	1^4	1^5	1^4	1^5	1^6	1^7	1^2	1^4	1^6	1^7	1^6	1^7
1	2^0	2^1	2^0	2^1	2^0	2^1	1^6	1^7	1^4	1^5	2^0	2^1	2^0	2^1	1^4	1^5	2^0	2^1	2^0	2^1
2 3 4	1^4	1^5	1^4	1^5	1^4	1^5	1^2	1^4	1^2	1^4	1^4	1^5	1^4	1^5	1^1	1^2	1^6	1^7	1^4	1^5
5	1^4	1^5	1^4	1^5	1^4	1^5	1^1	1^2	1^1	1^2	1^4	1^5	1^4	1^5	1^1	1^2	1^4	1^5	1^4	1^5
6	1^6	1^7	1^4	1^5	1^4	1^5	1^2	1^5	1^2	1^4	1^4	1^5	1^4	1^5	1^1	1^2	1^4	1^5	1^4	1^5
7	1^2	1^4	1^2	1^4	1^4	1^5	1^2	1^5	0^5	0^6	1^2	1^4	1^4	1^5	1^1	1^2	1^4	1^5	1^2	1^4
8	1^6	1^7	1^6	1^7	1^4	1^5	1^2	1^5	1^2	1^4	1^4	1^5	1^6	1^7	1^2	1^4	1^6	1^7	1^4	1^5

UPPER AND LOWER CASE LETTER WIDTHS

LETTERS	6 INCH UPPER CASE LETTERS SERIES C	6 INCH UPPER CASE LETTERS SERIES D	8 INCH UPPER CASE LETTERS SERIES C	8 INCH UPPER CASE LETTERS SERIES D	LETTERS	6 INCH LOWER CASE LETTERS SERIES C	6 INCH LOWER CASE LETTERS SERIES D
A	3^6	5^0	5^0	6^5	a	3^5	4^2
B	3^2	4^0	4^3	5^3	b	3^5	4^2
C	3^2	4^0	4^3	5^3	c	3^5	4^1
D	3^2	4^0	4^3	5^3	d	3^5	4^2
E	3^0	3^5	4^0	4^7	e	3^5	4^2
F	3^0	3^5	4^0	4^7	f	2^3	2^6
G	3^2	4^0	4^3	5^3	g	3^5	4^2
H	3^2	4^0	4^3	5^3	h	3^5	4^2
I	0^7	0^7	1^1	1^2	i	1^1	1^1
J	3^0	3^6	4^0	5^0	j	2^0	2^2
K	3^2	4^1	4^3	5^4	k	3^5	4^2
L	3^0	3^5	4^0	4^7	l	1^1	1^1
M	3^7	4^5	5^1	6^1	m	6^0	7^0
N	3^2	4^0	4^3	5^3	n	3^5	4^2
O	3^4	4^2	4^5	5^5	o	3^6	4^3
P	3^2	4^0	4^3	5^3	p	3^5	4^2
Q	3^4	4^2	4^5	5^5	q	3^5	4^2
R	3^2	4^0	4^3	5^3	r	2^6	3^2
S	3^2	4^0	4^3	5^3	s	3^6	4^2
T	3^0	3^5	4^0	4^7	t	2^7	3^2
U	3^2	4^0	4^3	5^3	u	3^5	4^2
V	3^5	4^4	4^7	6^0	v	4^2	4^7
W	4^4	5^2	6^0	7^0	w	5^5	6^4
X	3^4	4^0	4^5	5^3	x	4^4	5^1
Y	3^6	5^0	5^0	6^6	y	4^6	5^3
Z	3^2	4^0	4^3	5^3	z	3^6	4^3

NUMBER	6 INCH SERIES C	6 INCH SERIES D	8 INCH SERIES C	8 INCH SERIES D
1	1^2	1^4	1^5	2^0
2	3^2	4^0	4^3	5^3
3	3^2	4^0	4^3	5^3
4	3^5	4^3	4^7	5^7
5	3^2	4^0	4^3	5^3
6	3^2	4^0	4^3	5^3
7	3^2	4^0	4^3	5^3
8	3^2	4^0	4^3	5^3
9	3^2	4^0	4^3	5^3
0	3^4	4^2	4^5	5^5

SINGH
SINGH + ASSOCIATES, INC.
CONSULTING ENGINEERS

USER NAME = .USER.	DESIGNED - MG	REVISED -	
FILE NAME = D160W13-sht-ts27.dgn	DRAWN - VP/MG	REVISED -	
PLOT SCALE = 20.0000 ' / in.	CHECKED - IY/KP	REVISED -	
PLOT DATE = 12/17/2013	DATE - 12/17/2013	REVISED -	

STATE OF ILLINOIS
DEPARTMENT OF TRANSPORTATION

US ROUTE 30 AT I-55 RAMPS
MAST ARM MOUNTED STREET NAME SIGNS

SCALE: NTS | SHEET 33 OF 33 SHEETS | STA. TO STA.

F.A.P. RTE.	SECTION	COUNTY	TOTAL SHEETS	SHEET NO.
575	14-N	WILL	163	93

CONTRACT NO. 60W13

ILLINOIS FED. AID PROJECT

ABBREVIATIONS

ABBREVIATION	DESCRIPTION
AC	ALTERNATING CURRENT
A/C	AERIAL CABLE
B.O.C.	BACK OF CURB
CB	CIRCUIT BREAKER
CKT	CIRCUIT
CM	CENTIMETER
CP	CONTROL PANEL
CT	CURRENT TRANSFORMER
DA	DAVIT ARM
DC	DIRECT CURRENT
DIA	DIAMETER
DP	DISTRIBUTION PANEL
E	EXISTING UNIT TO REMAIN
ECA	ELECTRIC CABLE ASSEMBLY
E.O.P.	EDGE OF PAVEMENT
FT	FEET OR FOOT
FU	FUSE
GND	GROUND
HID	HIGH INTENSITY DISCHARGE
JB	JUNCTION BOX
KVA	KILOVOLT-AMPERE
KW	KILOWATTS
M	METER
MA	MAST ARM
MC	MULTI-CONDUCTOR
MM	MILLIMETER
M.H.	MOUNTING HEIGHT
MW	MESSENGER WIRE
NO. #	NUMBER
N.T.S.	NOT TO SCALE
P	PROPOSED
PB	PUSH BUTTON
PNL	PANEL
PVC	POLYVINYL CHLORIDE
PVCC RGC	PVC COATED RIGID GALVANIZED CONDUIT
PT	POTENTIAL TRANSFORMER
R	EXISTING UNIT TO BE REMOVED (OWNER SALVAGED U.N.O.)
EX. ROW	EXISTING RIGHT OF WAY
RR	EXISTING UNIT TO BE REMOVED AND REINSTALLED
RECP	RECEPTACLE
RGC	RIGID GALVANIZED CONDUIT
SEL SW	SELECTOR SWITCH
SPARE	SPARE
SPACE	SPACE
SS	STAINLESS STEEL
STA	STATION
T/F	TOP OF FOUNDATION
UD	UNIT DUCT
U.N.O.	UNLESS NOTED OTHERWISE
UGC, GS	UNDERGROUND CONDUIT, GALVANIZED STEEL
WP	WOOD POLE
XFMR	TRANSFORMER
HPS	HIGH PRESSURE SODIUM
LPS	LOW PRESSURE SODIUM
LTFM	LIQUID TIGHT FLEXIBLE METALLIC

LIGHTING AND ELECTRICAL LEGEND

SYMBOL	DESCRIPTION
RR	EXISTING LIGHT UNIT TO BE REMOVED AND RELOCATED
E	EXISTING LIGHTING UNIT TO REMAIN
	EXISTING LIGHTING CONTROLLER, TO REMAIN
—E—	EXISTING UNIT DUCT, TO REMAIN
—R—	EXISTING UNDERGROUND UNIT DUCT TO BE ABANDONED
T	TEMPORARY LIGHT POLE, WOOD, 60 FT, CLASS 4, WITH 15' MAST ARM AND 400 WATT HPS TYPE M-C-III CONBRAHEAD LUMINAIRE.
	TEMPORARY WOOD POLE, 40 FT., CLASS 4
	PROPOSED LIGHTING UNIT MOUNTED ON BREAKAWAY TRANSFORMER BASE, 47.5FT M.H., 400W HPS TYPE M-C-III COBRAHEAD LUMINAIRE MOUNTED ON 15FT MAST ARM U.N.O.
ER	LIGHTING UNIT, TO BE REINSTALLED
	PROPOSED LIGHTING CONTROLLER, 240/480 VOLT, 1Ø, 3 WIRE
	PROPOSED UTILITY SERVICE CONNECTION, POLE MOUNTED
	PROPOSED UNIT DUCT, SIZE AND TYPE AS NOTED
	PROPOSED CABLE OR UNIT DUCT IN EXPOSED OR EMBEDDED CONDUIT, SIZE AND TYPE AS NOTED
	PROPOSED CABLE OR UNIT DUCT IN UNDERGROUND CONDUIT, SIZE AND TYPE AS NOTED
—A/C—	PROPOSED AERIAL LIGHTING CABLE WITH MESSENGER WIRE
	ELECTRIC GROUND ROD
	GUY WIRE

GENERAL NOTES

1. THE ELECTRICAL WORK SHALL BE PERFORMED IN ACCORDANCE WITH THE LATEST CODES, STANDARDS AND THE IDOT STANDARD SPECIFICATIONS FOR ROAD AND BRIDGE CONSTRUCTION ADOPTED JANUARY 1, 2012, AND SUPPLEMENTAL SPECIFICATIONS AND RECURRING SPECIAL PROVISIONS.
2. CONTRACTOR SHALL BE RESPONSIBLE FOR FULL MAINTENANCE OF THE EXISTING LIGHTING SYSTEM, AS DESCRIBED IN SPECIAL PROVISION "MAINTENACNE OF LIGHTING SYSTEM."

ROADWAY LIGHTING – BILL OF MATERIALS

ITEM	UNIT	TOTAL QUANTITY
ELECTRIC SERVICE INSTALLATION	EACH	1
UNDERGROUND CONDUIT, GALVANIZED STEEL, 3" DIA.	FOOT	881
UNIT DUCT, 600V, 3-1C NO.4, 1/C NO.6 GROUND, (XLP-TYPE USE), 1 1/4" DIA. POLYETHYLENE	FOOT	4644
AERIAL CABLE, 3-1/C NO.6 WITH MESSENGER WIRE	FOOT	2000
LUMINAIRE, SODIUM VAPOR, HORIZONTAL MOUNT, 400 WATT	EACH	6
LIGHTING CONTROLLER, BASE MOUNTED, 480VOLT, 200AMP (DUAL)	EACH	1
LIGHT POLE, ALUMINUM, 47.5 FT. M.H., 15 FT. MAST ARM	EACH	4
LIGHT POLE, WOOD, 60 FT, CLASS 4, WITH 15' MA	EACH	8
LIGHT POLE FOUNDATION, 24" DIAMETER	FOOT	120
BREAKAWAY DEVICE, TRANSFORMER BASE, 15 INCH BOLT CIRCLE	EACH	12
REMOVAL OF TEMPORARY LIGHTING UNIT	EACH	8
REMOVAL OF POLE FOUNDATION	EACH	8
RELOCATE EXISTING LIGHTING UNIT	EACH	8
REMOVAL OF LIGHTING CONTROLLER	EACH	1
REMOVAL OF LIGHTING CONTROLLER FOUNDATION	EACH	1
TEMPORARY LUMINAIRE, HIGH PRESSURE SODIUM VAPOR, 400 WATT HPS	EACH	9
TEMPORARY WOOD POLE, 40 FT., CLASS 4	EACH	2
LUMINAIRE SAFETY CABLE ASSEMBLY	EACH	6
MAINTENANCE OF LIGHTING SYSTEM	CAL MO	4

CALL-OUT SAMPLE

DEFINITION AND EXAMPLE

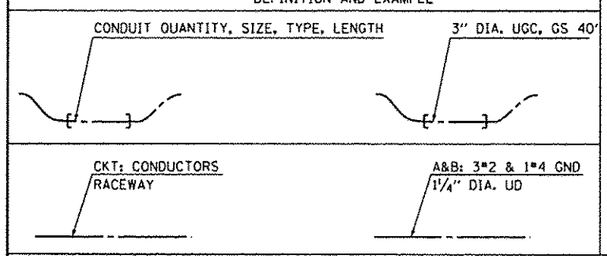

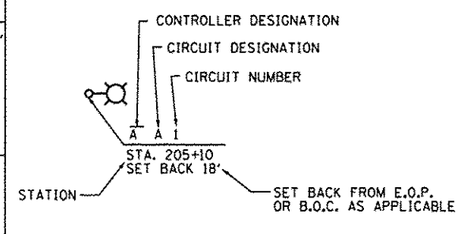

IDOT-D1 STANDARDS:

STANDARD NO.	TITLE
BE-205A	LIGHTING CONTROLLER, BASE MOUNTED, 480VOLT, 200AMP (DUAL) RADIO SCADA
BE-205B	LIGHTING CONTROLLER, BASE MOUNTED, 480VOLT, 200AMP (DUAL) RADIO SCADA
BE-205C	LIGHTING CONTROLLER, BASE MOUNTED, 480VOLT, 200AMP (DUAL) RADIO SCADA
BE-205D	LIGHTING CONTROLLER, BASE MOUNTED, 480VOLT, 200AMP (DUAL) RADIO SCADA
BE-220	ELECTRIC SERVICE INSTALLATION AERIAL, REMOTE DISCONNECT
BE-301	LIGHT POLE FOUNDATION, CONCRETE, >=35 FT. M.H. (15" B.C.)
BE-400	LIGHT POLE, ALUMINUM, TRUSS TYPE, 47.5 FT. M.H.
BE-701	LUMINAIRE SAFETY CABLE ASSEMBLY
BE-702	MISC. ELECTRICAL DETAILS SHEET A
BE-800	TEMPORARY LIGHTING
BE-801	TEMPORARY AERIAL CABLE INSTALLATION

INDEX OF DRAWINGS:

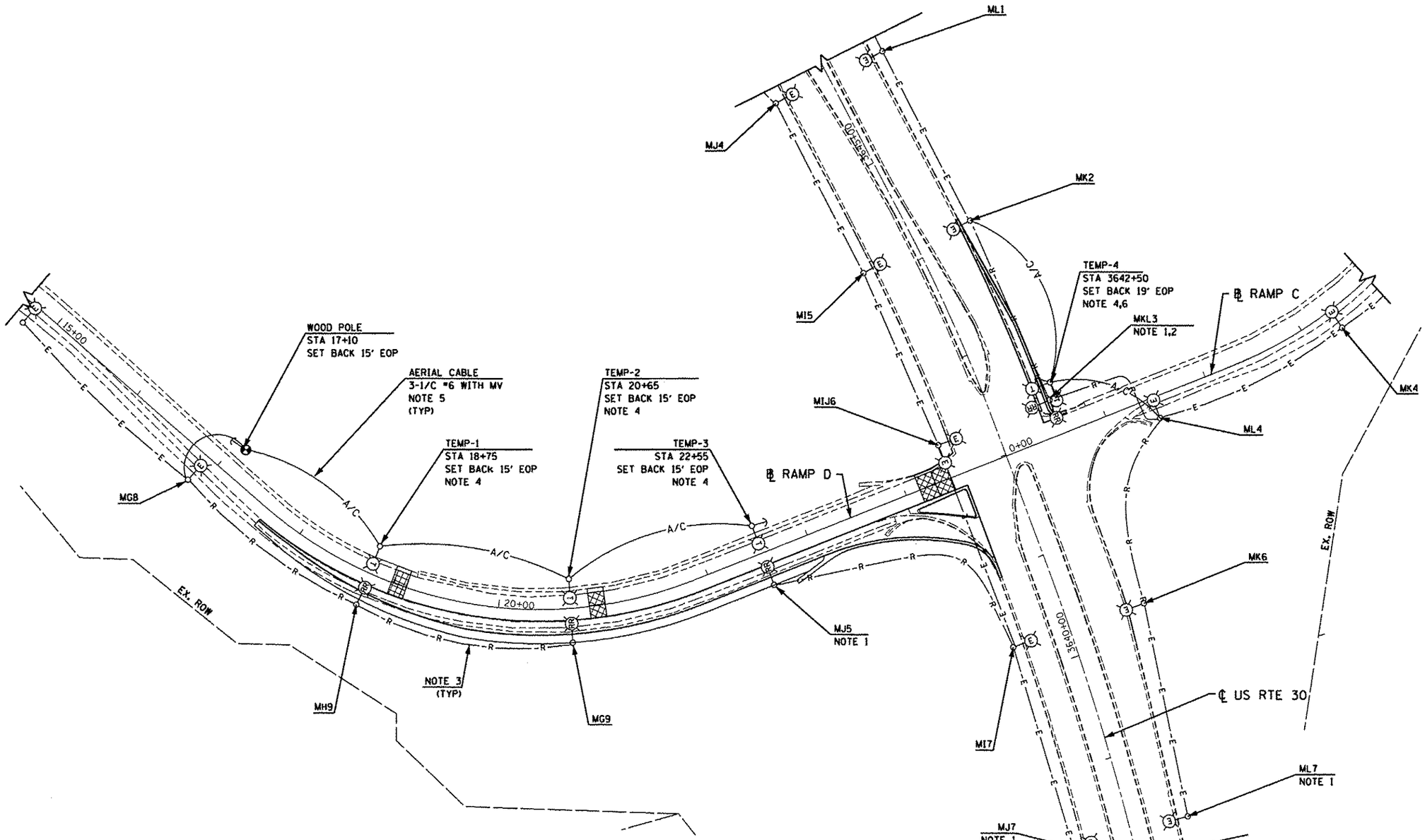

NOTES

1. THE EXISTING LIGHT POLE IDENTIFICATION NUMBERS SHALL BE REMOVED AND NEW POLE IDENTIFICATION NUMBERS SHALL BE PROVIDED AS SHOWN ON THE PROPOSED LIGHTING PLANS AND LIGHTING CONTROLLER WIRING DIAGRAM. THIS WORK SHALL BE INCIDENTAL TO MAINTENANCE OF LIGHTING SYSTEM.

2. CONTRACTOR SHALL INSTALL 400 WATT LUMINAIRES ON EXISTING RELOCATED POLE.

3. THE UNDERGROUND CABLES SHALL BE REMOVED AS PER STANDARD SECTION 842. THIS WORK SHALL BE INCLUDED IN THE COST OF REMOVAL OF POLE FOUNDATION.

4. TEMPORARY LIGHTING UNITS SHALL NOT BE REMOVED UNTIL PERMANENT LIGHTING SYSTEM IS IN PLACE IN APPROVED OPERATION.

5. AERIAL CABLES SHALL BE INSTALLED SUCH THAT THE MINIMUM CLEARANCE FROM GROUND IS NOT LESS THAN 20 FT AND A MINIMUM 10 FT AWAY FROM OVERHEAD UTILITY LINES.

6. TEMPORARY LIGHT POLE TEMP-4 TO BE SUPPLIED WITH SECOND MAST ARM AND LUMINAIRE

E-2

SINGH + ASSOCIATES, INC. CONSULTING ENGINEERS	USER NAME = .USER.	DESIGNED - RP/DJ	REVISED -	STATE OF ILLINOIS DEPARTMENT OF TRANSPORTATION	EXISTING LIGHTING REMOVAL AND TEMPORARY LIGHTING PLANS AT RAMP D AND US ROUTE 30	F.A.P. RTE.	SECTION	COUNTY	TOTAL SHEETS	SHEET NO.
	FILE NAME = D160W13-sht-light-02.dgn	DRAWN - RP/DJ	REVISED -			575	14-N	WILL	163	95
	PLOT SCALE = 50.0000 ' / in.	CHECKED - MK	REVISED -					CONTRACT NO. 60W13		
	PLOT DATE = 12/17/2013	DATE - 12/17/2013	REVISED -		SCALE: 1" = 50' SHEET 2 OF 8 SHEETS STA. 15+00 TO STA. 25+00		ILLINOIS FED. AID PROJECT			

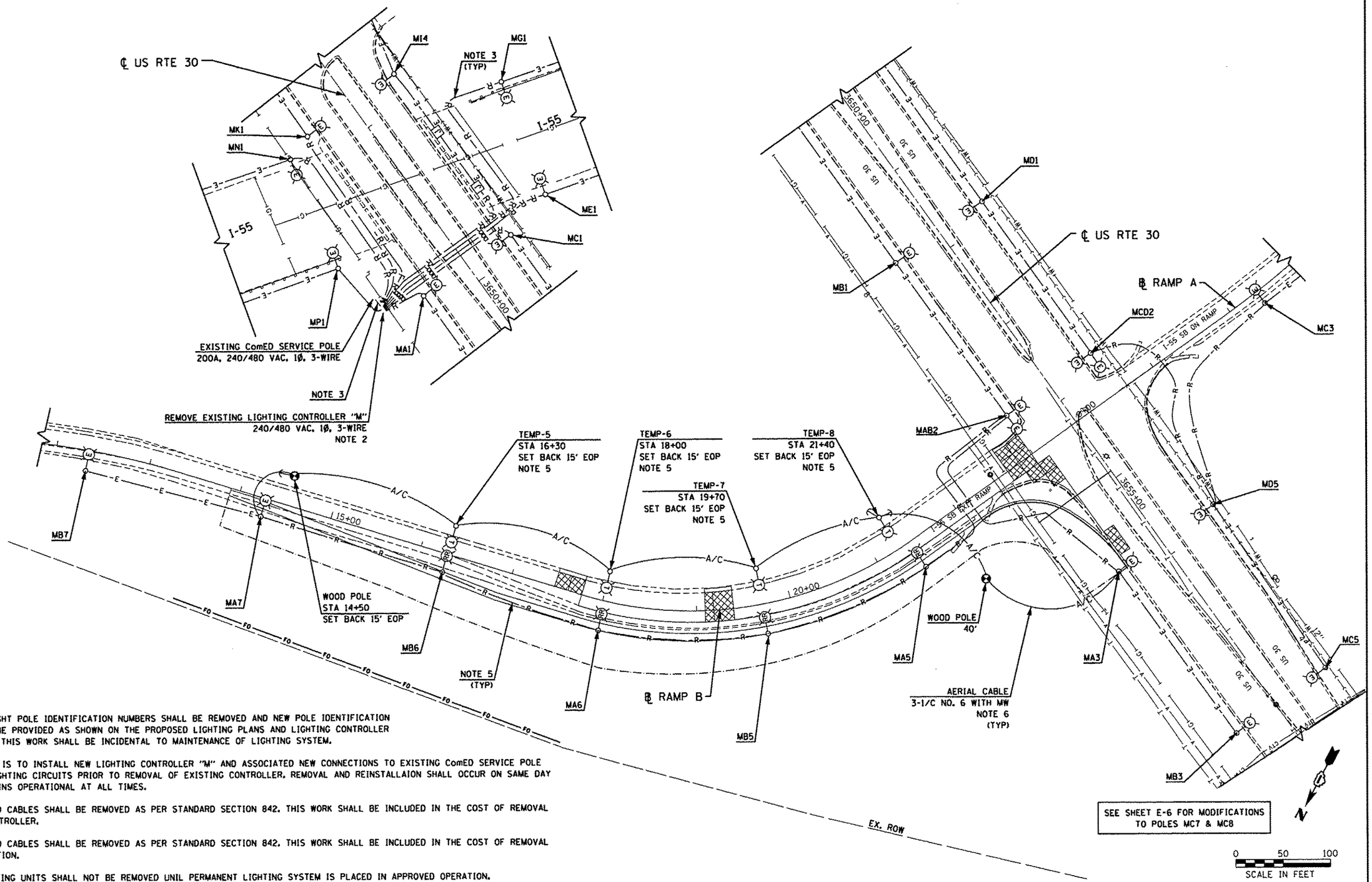

NOTES

1. THE EXISTING LIGHT POLE IDENTIFICATION NUMBERS SHALL BE REMOVED AND NEW POLE IDENTIFICATION NUMBERS SHALL BE PROVIDED AS SHOWN ON THE PROPOSED LIGHTING PLANS AND LIGHTING CONTROLLER WIRING DIAGRAM. THIS WORK SHALL BE INCIDENTAL TO MAINTENANCE OF LIGHTING SYSTEM.

2. THE CONTRACTOR IS TO INSTALL NEW LIGHTING CONTROLLER "M" AND ASSOCIATED NEW CONNECTIONS TO EXISTING ComED SERVICE POLE AND EXISTING LIGHTING CIRCUITS PRIOR TO REMOVAL OF EXISTING CONTROLLER. REMOVAL AND REINSTALLAION SHALL OCCUR ON SAME DAY SO SYSTEM REMAINS OPERATIONAL AT ALL TIMES.

3. THE UNDERGROUND CABLES SHALL BE REMOVED AS PER STANDARD SECTION 842. THIS WORK SHALL BE INCLUDED IN THE COST OF REMOVAL OF EXISTING CONTROLLER.

4. THE UNDERGROUND CABLES SHALL BE REMOVED AS PER STANDARD SECTION 842. THIS WORK SHALL BE INCLUDED IN THE COST OF REMOVAL OF POLE FOUNDATION.

5. TEMPORARY LIGHTING UNITS SHALL NOT BE REMOVED UNIL PERMANENT LIGHTING SYSTEM IS PLACED IN APPROVED OPERATION.

6. AERIAL CABLE SHALL BE INSTALLED SUCH THAT THE MINIMUM CLEARANCE FROM GROUND IS NOT LESS THAN 20 FT AND IS A MINIMUM OF 10 FT FROM OVERHEAD UTILITY LINES.

E-3

SINGH
SINGH + ASSOCIATES, INC.
CONSULTING ENGINEERS

USER NAME = USER	DESIGNED - RP/DJ	REVISED -	
FILE NAME = D160W13-sht-light-03.dgn	DRAWN - RP/DJ	REVISED -	
PLOT SCALE = 50.0000 ' / in.	CHECKED - MK	REVISED -	
PLOT DATE = 12/17/2013	DATE - 12/17/2013	REVISED -	

STATE OF ILLINOIS
DEPARTMENT OF TRANSPORTATION

EXISTING LIGHTING REMOVAL AND TEMPORARY PLAN
AT RAMP B AND US ROUTE 30

SCALE: 1" = 50' | SHEET 3 OF 8 SHEETS | STA. 5+00 TO STA. 25+00

F.A.P. RTE.	SECTION	COUNTY	TOTAL SHEETS	SHEET NO.
575	14-N	WILL	163	96
		CONTRACT NO. 60W13		
	ILLINOIS	FED. AID PROJECT		

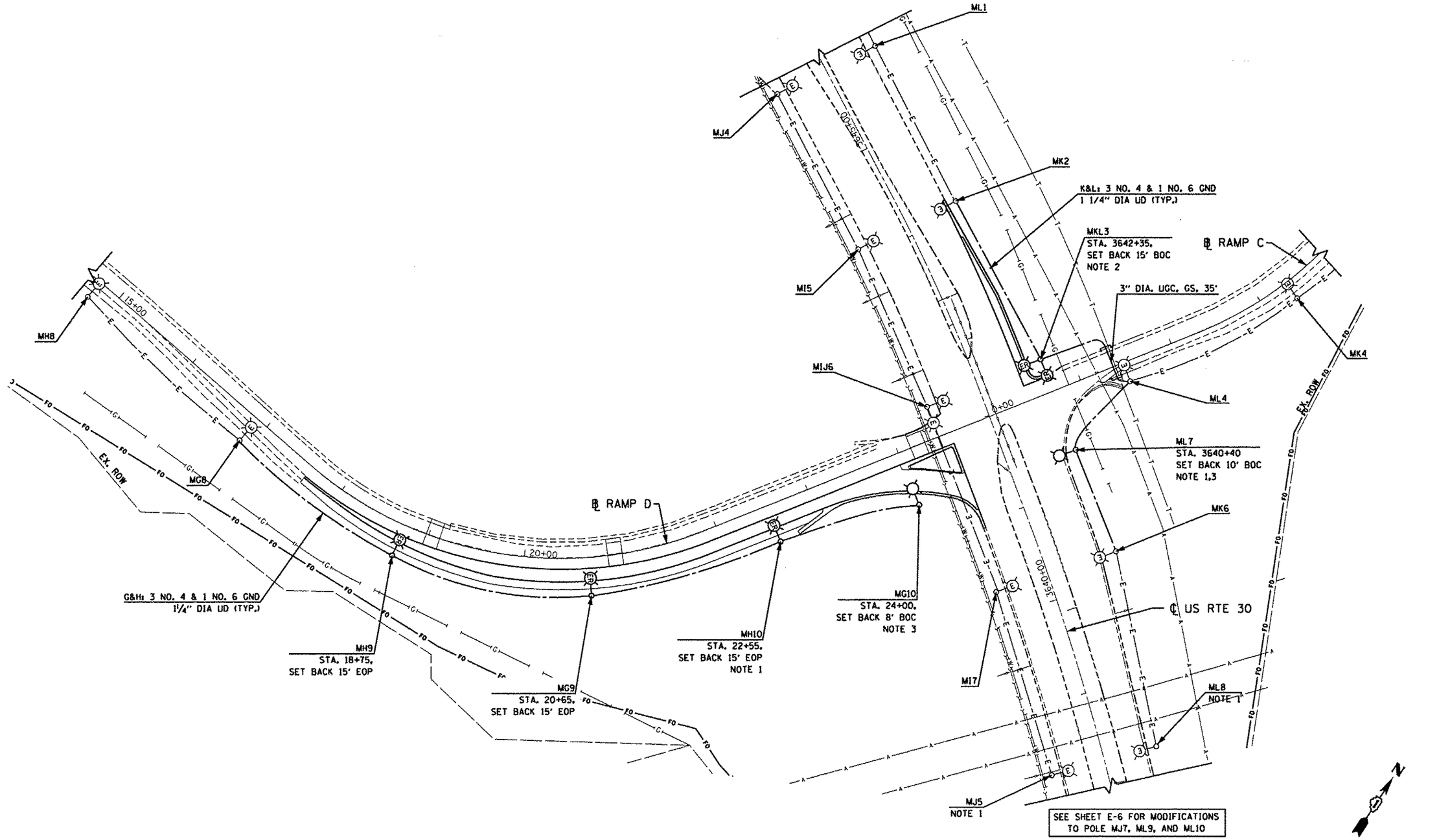

NOTES

1. THE EXISTING LIGHT POLE IDENTIFICATION NUMBERS SHALL BE REMOVED AND NEW POLE IDENTIFICATION NUMBERS SHALL BE PROVIDED AS SHOWN ON THE PROPOSED LIGHTING PLANS AND LIGHTING CONTROLLER WIRING DIAGRAM. THIS WORK SHALL BE INCIDENTAL TO MAINTENANCE OF LIGHTING SYSTEM.

2. CONTRACTOR SHALL INSTALL 400 WATT LUMINAIRES ON EXISTING RELOCATED POLES.

3. INSTALL LUMINAIRE SAFETY CABLE ASSEMBLY.

SINGH + ASSOCIATES, INC.
CONSULTING ENGINEERS

USER NAME = _USER_	DESIGNED - RP/DJ	REVISED -	
FILE NAME = 01G0W13-sht-light-04.dgn	DRAWN - RP/DJ	REVISED -	
PLOT SCALE = 50.0000 ' / in.	CHECKED - MK	REVISED -	
PLOT DATE = 1/22/2014	DATE - 12/17/2013	REVISED -	

STATE OF ILLINOIS
DEPARTMENT OF TRANSPORTATION

LIGHTING PLAN AT RAMP D
AND US ROUTE 30

SCALE: 1" = 50' | SHEET 4 OF 8 SHEETS | STA. 5+00 TO STA. 25+00

F.A.P. RTE.	SECTION	COUNTY	TOTAL SHEETS	SHEET NO.
575	14-N	WILL	163	97

CONTRACT NO. 60W13

ILLINOIS FED. AID PROJECT

NOTES

1. THE EXISTING LIGHT POLE IDENTIFICATION NUMBERS SHALL BE REMOVED AND NEW POLE IDENTIFICATION NUMBERS SHALL BE PROVIDED AS SHOWN ON THE PROPOSED LIGHTING PLANS AND LIGHTING CONTROLLER WIRING DIAGRAM. THIS WORK SHALL BE INCIDENTAL TO MAINTENANCE OF LIGHTING SYSTEM.
2. INSTALL LUMINAIRE SAFETY CABLE ASSEMBLY.
3. THE CONTRACTOR IS TO INSTALL NEW LIGHTING CONTROLLER "M" AND ASSOCIATED NEW CONNECTIONS TO EXISTING ComED SERVICE POLE AND EXISTING LIGHTING CIRCUITS PRIOR TO REMOVAL OF EXISTING CONTROLLER. REMOVAL AND REINSTALLAION SHALL OCCUR ON SAME DAY SO SYSTEM REMAINS OPERATIONAL AT ALL TIMES.
4. CONTRACTOR SHALL COORDINATE WITH COMED TO CONNECT SERVICE WIRE TO EXISTING TRANSFORMER. THE COST OF THE WORK SHALL BE INCLUDED IN ELECTRIC SERVICE INSTALLATION ITEM.

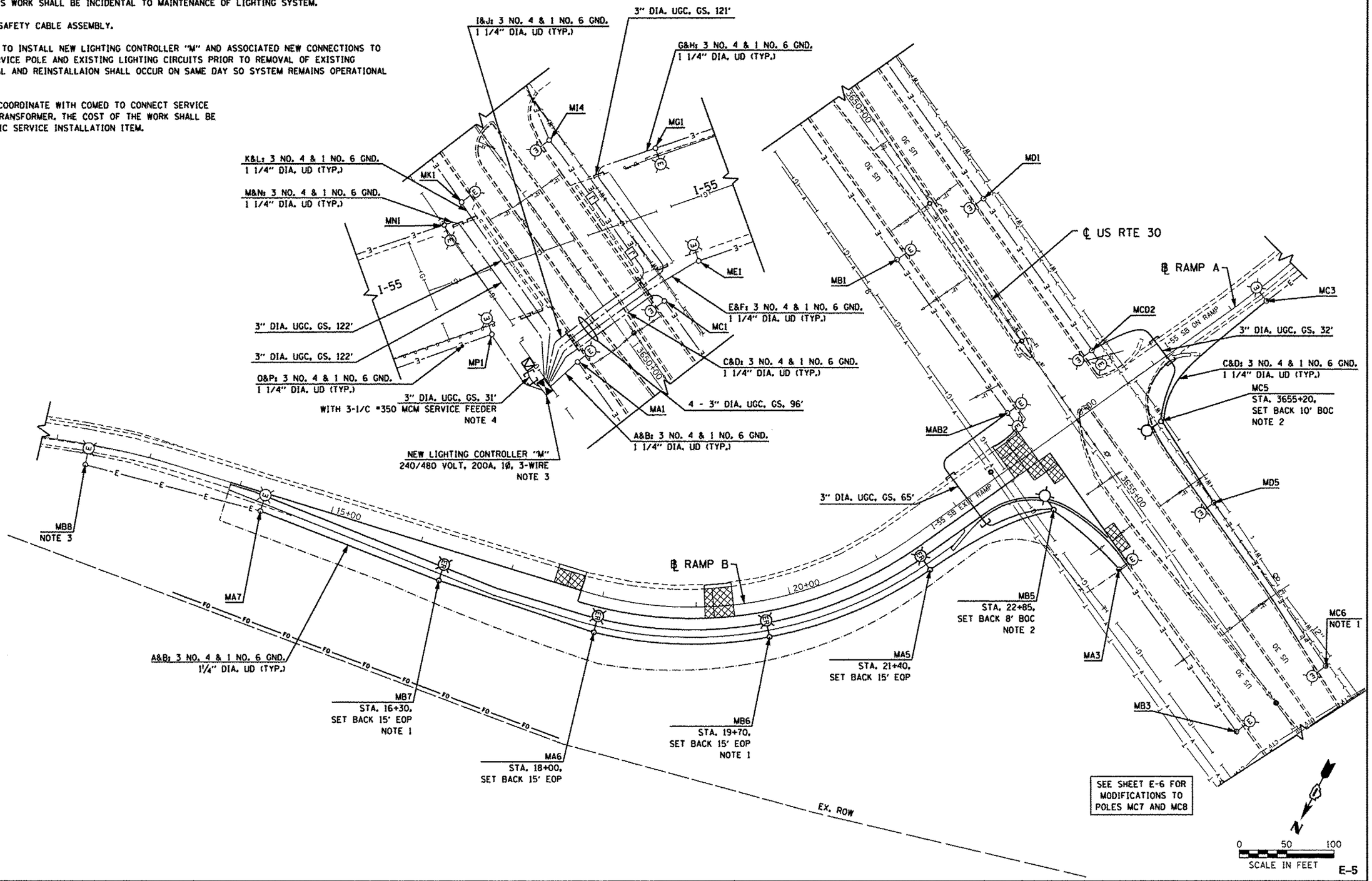

E-5

SINGH + ASSOCIATES, INC. CONSULTING ENGINEERS	USER NAME = _USER_	DESIGNED - RP/DJ	REVISED -	STATE OF ILLINOIS DEPARTMENT OF TRANSPORTATION	LIGHTING PLAN AT RAMP B AND US ROUTE 30	F.A.P. RTE.	SECTION	COUNTY	TOTAL SHEETS	SHEET NO.
	FILE NAME = 0160W13-sht-light-05.dgn	DRAWN - RP/DJ	REVISED -			575	14-N	WILL	163	98
	PLOT SCALE = 50.0000 ' / in.	CHECKED - MK	REVISED -					CONTRACT NO. 60W13		
	PLOT DATE = 12/17/2013	DATE - 12/17/2013	REVISED -		SCALE: 1" = 50' SHEET 5 OF 8 SHEETS STA. 5+00 TO STA. 25+00		ILLINOIS	FED. AID PROJECT		

ENLARGED SECTION - UNDERPASS LIGHTING

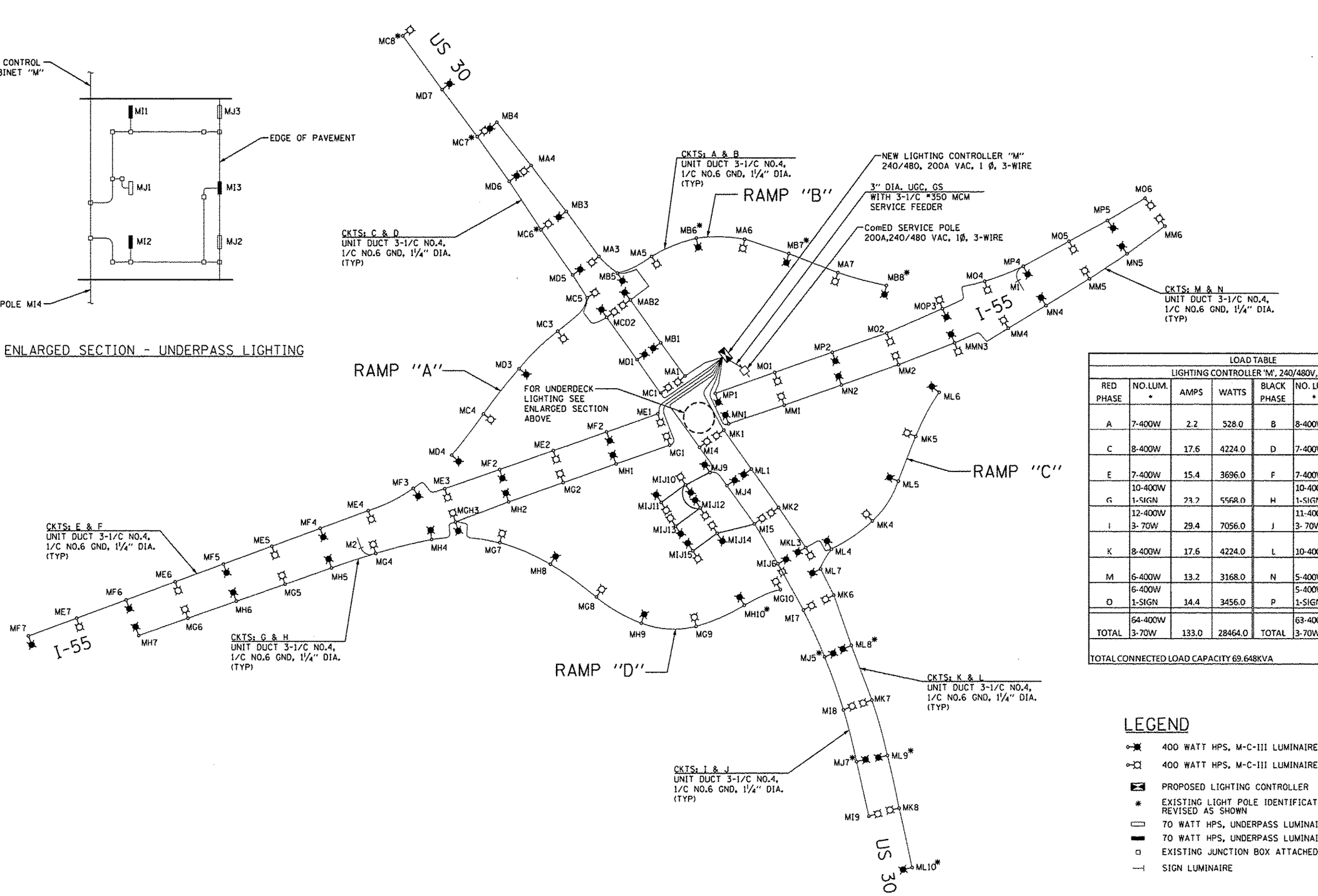

LOAD TABLE							
LIGHTING CONTROLLER 'M', 240/480V, 1-Φ							
RED PHASE	NO.LUM. *	AMPS	WATTS	BLACK PHASE	NO. LUM. *	AMPS	WATTS
A	7-400W	2.2	528.0	B	8-400W	17.6	4224.0
C	8-400W	17.6	4224.0	D	7-400W	15.4	3696.0
E	7-400W	15.4	3696.0	F	7-400W	15.4	3696.0
G	10-400W 1-SIGN	23.2	5568.0	H	10-400W 1-SIGN	23.2	5568.0
I	12-400W 3- 70W	29.4	7056.0	J	11-400W 3- 70W	27.2	6528.0
K	8-400W	17.6	4224.0	L	10-400W	22.0	5280.0
M	6-400W	13.2	3168.0	N	5-400W	11.0	2640.0
O	6-400W 1-SIGN	14.4	3456.0	P	5-400W 1-SIGN	12.2	2928.0
TOTAL	64-400W 3-70W	133.0	28464.0	TOTAL	63-400W 3-70W	144.0	31632.0
TOTAL CONNECTED LOAD CAPACITY 69.648KVA							

LEGEND

- 400 WATT HPS, M-C-III LUMINAIRE ON BLACK CABLE
- 400 WATT HPS, M-C-III LUMINAIRE ON RED CABLE
- PROPOSED LIGHTING CONTROLLER
- * EXISTING LIGHT POLE IDENTIFICATION NUMBERS TO BE REVISED AS SHOWN
- 70 WATT HPS, UNDERPASS LUMINAIRE ON RED CABLE
- 70 WATT HPS, UNDERPASS LUMINAIRE ON BLACK CABLE
- EXISTING JUNCTION BOX ATTACHED TO STRUCTURE
- SIGN LUMINAIRE

E-6

SINGH + ASSOCIATES, INC. CONSULTING ENGINEERS

USER NAME = .USER.	DESIGNED - RP/DJ	REVISED -	
FILE NAME = D160W13-sht-light-06.dgn	DRAWN - RP/DJ	REVISED -	
PLOT SCALE = 180.0000 ' / in.	CHECKED - MK	REVISED -	
PLOT DATE = 12/17/2013	DATE - 12/17/2013	REVISED -	

STATE OF ILLINOIS
DEPARTMENT OF TRANSPORTATION

LIGHTING CONTROLLER "M"
WIRING DIAGRAM

SCALE: N.T.S. | SHEET 6 OF 8 SHEETS | STA. TO STA.

F.A.P. RTE.	SECTION	COUNTY	TOTAL SHEETS	SHEET NO.
575	14-N	WILL	163	99

CONTRACT NO. 60W13

ILLINOIS FED. AID PROJECT

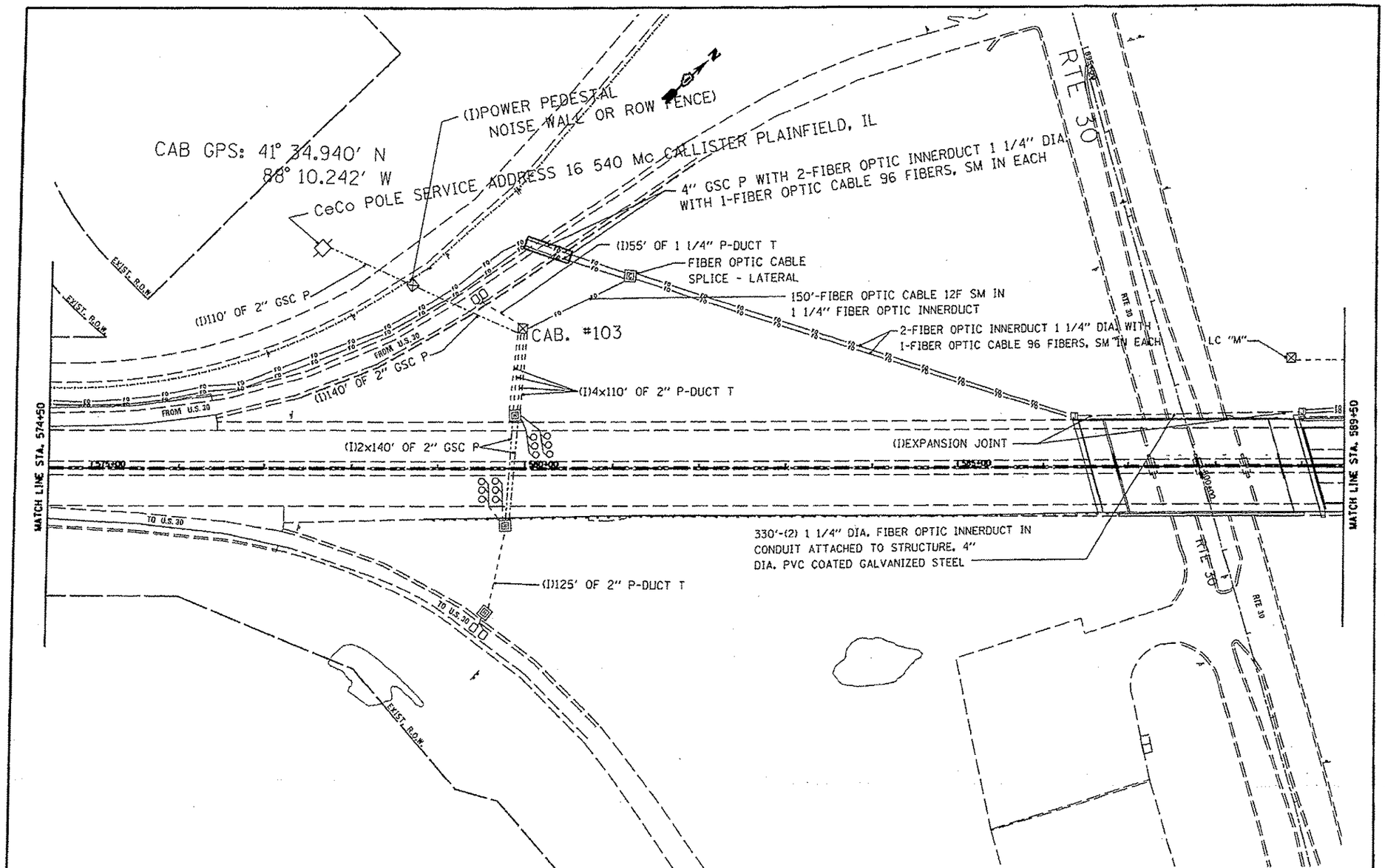

FILE NAME = $FILE$	USER NAME = $USER$	DESIGNED -	REVISED -	STATE OF ILLINOIS DEPARTMENT OF TRANSPORTATION	FIBER OPTIC CABLE INSTALLATION – I-55 (I-80 TO NAPERVILLE ROAD) SOUTH US RTE 30	F.A.I. RTE.	SECTION	COUNTY	TOTAL SHEETS	SHEET NO.
		DRAWN -	REVISED -			55	2009-139 SG	WILL	14	23
	PLOT SCALE = $SCALE$	CHECKED -	REVISED -					CONTRACT NO. 60K06		
	PLOT DATE = $DATE$	DATE -	REVISED -		SCALE: 1" = 50' SHEET NO. OF SHEETS STA. TO STA.		FED. ROAD DIST. NO. ILLINOIS FED. AID PROJECT			

SHT023.dgn 5/6/2011 12:14:07 PM

FOR REFERENCE ONLY

E-7

SINGH
SINGH + ASSOCIATES, INC.
CONSULTING ENGINEERS

USER NAME = _USER_	DESIGNED -	REVISED -	STATE OF ILLINOIS DEPARTMENT OF TRANSPORTATION	EXISTING FIBER OPTIC UTILITIES (SHEET 1 OF 2)	F.A.P. RTE.	SECTION	COUNTY	TOTAL SHEETS	SHEET NO.
FILE NAME = 0160W13-sht-light-07.dgn	DRAWN - DJ	REVISED -			575	14-N	WILL	163	100
PLOT SCALE = 1.0000 ' / in.	CHECKED - RP	REVISED -					CONTRACT NO. 60W13		
PLOT DATE = 12/17/2013	DATE - 12/17/2013	REVISED -		SCALE: N.T.S. SHEET 7 OF 8 SHEETS STA. TO STA.			ILLINOIS FED. AID PROJECT		