BEAM 1

Location	Station	Offset	Theoretical Grade Elevations	Theoretical Grade Elevations Adjusted For Dead Load Deflection
Bk. W. Abut.	7811+74.00	-31.625	598.19	598.19
℄ Brg. W. Abut.	7811+77.00	-31.625	598.27	598.27
A	7811+87.00	-31.625	598.53	598.59
B	7811+97.00	-31.625	598.78	598.90
C	7812+07.00	-31.625	599.04	599.19
D	7812+17.00	-31.625	599.30	599.47
E	7812+27.00	-31.625	599.55	599.71
F	7812+37.00	-31.625	599.75	599.89
G	7812+47.00	-31.625	599.90	600.00
H	7812+57.00	-31.625	599.99	600.05
I	7812+67.00	-31.625	600.04	600.05
℄ Pier	7812+73.25	-31.625	600.05	600.05
J	7812+83.25	-31.625	600.02	600.01
K	7812+93.25	-31.625	599.93	599.92
L	7813+03.25	-31.625	599.80	599.80
M	7813+13.25	-31.625	599.62	599.62
N	7813+23.25	-31.625	599.39	599.40
O	7813+33.25	-31.625	599.11	599.11
℄ Brg. E. Abut.	7813+41.25	-31.625	598.84	598.84
Bk. E. Abut.	7813+44.25	-31.625	598.74	598.74

BEAM 2

Location	Station	Offset	Theoretical Grade Elevations	Theoretical Grade Elevations Adjusted For Dead Load Deflection
Bk. W. Abut.	7811+74.00	-25.875	598.04	598.04
℄ Brg. W. Abut.	7811+77.00	-25.875	598.12	598.12
A	7811+87.00	-25.875	598.38	598.44
B	7811+97.00	-25.875	598.63	598.75
C	7812+07.00	-25.875	598.89	599.04
D	7812+17.00	-25.875	599.15	599.32
E	7812+27.00	-25.875	599.40	599.56
F	7812+37.00	-25.875	599.60	599.74
G	7812+47.00	-25.875	599.75	599.85
H	7812+57.00	-25.875	599.84	599.90
I	7812+67.00	-25.875	599.89	599.91
℄ Pier	7812+73.25	-25.875	599.90	599.90
J	7812+83.25	-25.875	599.87	599.86
K	7812+93.25	-25.875	599.78	599.77
L	7813+03.25	-25.875	599.65	599.65
M	7813+13.25	-25.875	599.47	599.47
N	7813+23.25	-25.875	599.24	599.25
O	7813+33.25	-25.875	598.96	598.96
℄ Brg. E. Abut.	7813+41.25	-25.875	598.69	598.69
Bk. E. Abut.	7813+44.25	-25.875	598.59	598.59

BEAM 3

Location	Station	Offset	Theoretical Grade Elevations	Theoretical Grade Elevations Adjusted For Dead Load Deflection
Bk. W. Abut.	7811+74.00	-20.125	597.97	597.97
℄ Brg. W. Abut.	7811+77.00	-20.125	598.05	598.05
A	7811+87.00	-20.125	598.30	598.37
B	7811+97.00	-20.125	598.56	598.68
C	7812+07.00	-20.125	598.82	598.97
D	7812+17.00	-20.125	599.08	599.24
E	7812+27.00	-20.125	599.33	599.49
F	7812+37.00	-20.125	599.53	599.67
G	7812+47.00	-20.125	599.68	599.78
H	7812+57.00	-20.125	599.77	599.82
I	7812+67.00	-20.125	599.82	599.83
℄ Pier	7812+73.25	-20.125	599.83	599.83
J	7812+83.25	-20.125	599.80	599.78
K	7812+93.25	-20.125	599.71	599.70
L	7813+03.25	-20.125	599.58	599.58
M	7813+13.25	-20.125	599.40	599.40
N	7813+23.25	-20.125	599.17	599.17
O	7813+33.25	-20.125	598.89	598.89
℄ Brg. E. Abut.	7813+41.25	-20.125	598.62	598.62
Bk. E. Abut.	7813+44.25	-20.125	598.52	598.52

BEAM 4

Location	Station	Offset	Theoretical Grade Elevations	Theoretical Grade Elevations Adjusted For Dead Load Deflection
Bk. W. Abut.	7811+74.00	-14.375	598.06	598.06
℄ Brg. W. Abut.	7811+77.00	-14.375	598.14	598.14
A	7811+87.00	-14.375	598.39	598.46
B	7811+97.00	-14.375	598.65	598.77
C	7812+07.00	-14.375	598.91	599.06
D	7812+17.00	-14.375	599.17	599.33
E	7812+27.00	-14.375	599.42	599.58
F	7812+37.00	-14.375	599.62	599.76
G	7812+47.00	-14.375	599.77	599.87
H	7812+57.00	-14.375	599.86	599.91
I	7812+67.00	-14.375	599.91	599.92
℄ Pier	7812+73.25	-14.375	599.92	599.92
J	7812+83.25	-14.375	599.89	599.87
K	7812+93.25	-14.375	599.80	599.79
L	7813+03.25	-14.375	599.67	599.67
M	7813+13.25	-14.375	599.49	599.49
N	7813+23.25	-14.375	599.26	599.26
O	7813+33.25	-14.375	598.98	598.98
℄ Brg. E. Abut.	7813+41.25	-14.375	598.71	598.71
Bk. E. Abut.	7813+44.25	-14.375	598.61	598.61

BEAM 5

Location	Station	Offset	Theoretical Grade Elevations	Theoretical Grade Elevations Adjusted For Dead Load Deflection
Bk. W. Abut.	7811+74.00	-8.625	598.15	598.15
℄ Brg. W. Abut.	7811+77.00	-8.625	598.23	598.23
A	7811+87.00	-8.625	598.48	598.55
B	7811+97.00	-8.625	598.74	598.86
C	7812+07.00	-8.625	599.00	599.15
D	7812+17.00	-8.625	599.26	599.42
E	7812+27.00	-8.625	599.51	599.67
F	7812+37.00	-8.625	599.71	599.85
G	7812+47.00	-8.625	599.86	599.96
H	7812+57.00	-8.625	599.95	600.00
I	7812+67.00	-8.625	600.00	600.01
℄ Pier	7812+73.25	-8.625	600.01	600.01
J	7812+83.25	-8.625	599.98	599.96
K	7812+93.25	-8.625	599.89	599.88
L	7813+03.25	-8.625	599.76	599.76
M	7813+13.25	-8.625	599.58	599.58
N	7813+23.25	-8.625	599.35	599.35
O	7813+33.25	-8.625	599.07	599.07
℄ Brg. E. Abut.	7813+41.25	-8.625	598.80	598.80
Bk. E. Abut.	7813+44.25	-8.625	598.70	598.70

BEAM 6

Location	Station	Offset	Theoretical Grade Elevations	Theoretical Grade Elevations Adjusted For Dead Load Deflection
Bk. W. Abut.	7811+74.00	-2.875	598.24	598.24
℄ Brg. W. Abut.	7811+77.00	-2.875	598.32	598.32
A	7811+87.00	-2.875	598.57	598.64
B	7811+97.00	-2.875	598.83	598.95
C	7812+07.00	-2.875	599.09	599.24
D	7812+17.00	-2.875	599.35	599.51
E	7812+27.00	-2.875	599.60	599.76
F	7812+37.00	-2.875	599.80	599.93
G	7812+47.00	-2.875	599.95	600.05
H	7812+57.00	-2.875	600.04	600.09
I	7812+67.00	-2.875	600.09	600.10
℄ Pier	7812+73.25	-2.875	600.10	600.10
J	7812+83.25	-2.875	600.07	600.05
K	7812+93.25	-2.875	599.98	599.97
L	7813+03.25	-2.875	599.85	599.85
M	7813+13.25	-2.875	599.67	599.67
N	7813+23.25	-2.875	599.44	599.44
O	7813+33.25	-2.875	599.16	599.16
℄ Brg. E. Abut.	7813+41.25	-2.875	598.89	598.89
Bk. E. Abut.	7813+44.25	-2.875	598.79	598.79

PROFILE GRADE LINE
CENTERLINE OF ROADWAY

Location	Station	Offset	Theoretical Grade Elevations	Theoretical Grade Elevations Adjusted For Dead Load Deflection
Bk. W. Abut.	7811+74.00	0	598.28	598.28
℄ Brg. W. Abut.	7811+77.00	0	598.36	598.36
A	7811+87.00	0	598.62	598.68
B	7811+97.00	0	598.88	598.99
C	7812+07.00	0	599.13	599.28
D	7812+17.00	0	599.39	599.56
E	7812+27.00	0	599.64	599.80
F	7812+37.00	0	599.84	599.98
G	7812+47.00	0	599.99	600.09
H	7812+57.00	0	600.08	600.14
I	7812+67.00	0	600.13	600.15
℄ Pier	7812+73.25	0	600.14	600.14
J	7812+83.25	0	600.11	600.10
K	7812+93.25	0	600.02	600.01
L	7813+03.25	0	599.89	599.89
M	7813+13.25	0	599.71	599.72
N	7813+23.25	0	599.48	599.49
O	7813+33.25	0	599.20	599.21
℄ Brg. E. Abut.	7813+41.25	0	598.94	598.94
Bk. E. Abut.	7813+44.25	0	598.84	598.84

BEAM 7

Location	Station	Offset	Theoretical Grade Elevations	Theoretical Grade Elevations Adjusted For Dead Load Deflection
Bk. W. Abut.	7811+74.00	2.875	598.24	598.24
℄ Brg. W. Abut.	7811+77.00	2.875	598.32	598.32
A	7811+87.00	2.875	598.57	598.64
B	7811+97.00	2.875	598.83	598.95
C	7812+07.00	2.875	599.09	599.24
D	7812+17.00	2.875	599.35	599.51
E	7812+27.00	2.875	599.60	599.76
F	7812+37.00	2.875	599.80	599.93
G	7812+47.00	2.875	599.95	600.05
H	7812+57.00	2.875	600.04	600.09
I	7812+67.00	2.875	600.09	600.10
℄ Pier	7812+73.25	2.875	600.10	600.10
J	7812+83.25	2.875	600.07	600.05
K	7812+93.25	2.875	599.98	599.97
L	7813+03.25	2.875	599.85	599.85
M	7813+13.25	2.875	599.67	599.67
N	7813+23.25	2.875	599.44	599.44
O	7813+33.25	2.875	599.16	599.16
℄ Brg. E. Abut.	7813+41.25	2.875	598.89	598.89
Bk. E. Abut.	7813+44.25	2.875	598.79	598.79

BEAM 8

Location	Station	Offset	Theoretical Grade Elevations	Theoretical Grade Elevations Adjusted For Dead Load Deflection
Bk. W. Abut.	7811+74.00	8.625	598.15	598.15
℄ Brg. W. Abut.	7811+77.00	8.625	598.23	598.23
A	7811+87.00	8.625	598.48	598.55
B	7811+97.00	8.625	598.74	598.86
C	7812+07.00	8.625	599.00	599.15
D	7812+17.00	8.625	599.26	599.42
E	7812+27.00	8.625	599.51	599.67
F	7812+37.00	8.625	599.71	599.85
G	7812+47.00	8.625	599.86	599.96
H	7812+57.00	8.625	599.95	600.00
I	7812+67.00	8.625	600.00	600.01
℄ Pier	7812+73.25	8.625	600.01	600.01
J	7812+83.25	8.625	599.98	599.96
K	7812+93.25	8.625	599.89	599.88
L	7813+03.25	8.625	599.76	599.76
M	7813+13.25	8.625	599.58	599.58
N	7813+23.25	8.625	599.35	599.35
O	7813+33.25	8.625	599.07	599.07
℄ Brg. E. Abut.	7813+41.25	8.625	598.80	598.80
Bk. E. Abut.	7813+44.25	8.625	598.70	598.70

BEAM 9

Location	Station	Offset	Theoretical Grade Elevations	Theoretical Grade Elevations Adjusted For Dead Load Deflection
Bk. W. Abut.	7811+74.00	14.375	598.06	598.06
℄ Brg. W. Abut.	7811+77.00	14.375	598.14	598.14
A	7811+87.00	14.375	598.39	598.46
B	7811+97.00	14.375	598.65	598.77
C	7812+07.00	14.375	598.91	599.06
D	7812+17.00	14.375	599.17	599.33
E	7812+27.00	14.375	599.42	599.58
F	7812+37.00	14.375	599.62	599.76
G	7812+47.00	14.375	599.77	599.87
H	7812+57.00	14.375	599.86	599.91
I	7812+67.00	14.375	599.91	599.92
℄ Pier	7812+73.25	14.375	599.92	599.92
J	7812+83.25	14.375	599.89	599.87
K	7812+93.25	14.375	599.80	599.79
L	7813+03.25	14.375	599.67	599.67
M	7813+13.25	14.375	599.49	599.49
N	7813+23.25	14.375	599.26	599.26
O	7813+33.25	14.375	598.98	598.98
℄ Brg. E. Abut.	7813+41.25	14.375	598.71	598.71
Bk. E. Abut.	7813+44.25	14.375	598.61	598.61

BEAM 10

Location	Station	Offset	Theoretical Grade Elevations	Theoretical Grade Elevations Adjusted For Dead Load Deflection
Bk. W. Abut.	7811+74.00	20.125	597.97	597.97
℄ Brg. W. Abut.	7811+77.00	20.125	598.05	598.05
A	7811+87.00	20.125	598.30	598.37
B	7811+97.00	20.125	598.56	598.68
C	7812+07.00	20.125	598.82	598.97
D	7812+17.00	20.125	599.08	599.24
E	7812+27.00	20.125	599.33	599.49
F	7812+37.00	20.125	599.53	599.67
G	7812+47.00	20.125	599.68	599.78
H	7812+57.00	20.125	599.77	599.82
I	7812+67.00	20.125	599.82	599.83
℄ Pier	7812+73.25	20.125	599.83	599.83
J	7812+83.25	20.125	599.80	599.78
K	7812+93.25	20.125	599.71	599.70
L	7813+03.25	20.125	599.58	599.58
M	7813+13.25	20.125	599.40	599.40
N	7813+23.25	20.125	599.17	599.17
O	7813+33.25	20.125	598.89	598.89
℄ Brg. E. Abut.	7813+41.25	20.125	598.62	598.62
Bk. E. Abut.	7813+44.25	20.125	598.52	598.52

BEAM 11

Location	Station	Offset	Theoretical Grade Elevations	Theoretical Grade Elevations Adjusted For Dead Load Deflection
*Bk. W. Abut.	7811+74.00	25.875	597.88	597.88
*℄ Brg. W. Abut.	7811+77.00	25.875	597.96	597.96
*A	7811+87.00	25.875	598.31	598.37
B	7811+97.00	25.875	598.63	598.75
C	7812+07.00	25.875	598.89	599.04
D	7812+17.00	25.875	599.15	599.32
E	7812+27.00	25.875	599.40	599.56
F	7812+37.00	25.875	599.60	599.74
G	7812+47.00	25.875	599.75	599.85
H	7812+57.00	25.875	599.84	599.90
I	7812+67.00	25.875	599.89	599.91
℄ Pier	7812+73.25	25.875	599.90	599.90
J	7812+83.25	25.875	599.87	599.86
K	7812+93.25	25.875	599.78	599.77
L	7813+03.25	25.875	599.65	599.65
M	7813+13.25	25.875	599.47	599.47
N	7813+23.25	25.875	599.24	599.25
O	7813+33.25	25.875	598.96	598.96
℄ Brg. E. Abut.	7813+41.25	25.875	598.69	598.69
Bk. E. Abut.	7813+44.25	25.875	598.59	598.59

*Adjusted for sidewalk ramp slopes.

0161711-60W71-S12-TopSlab

AECOM

USER NAME = dunkerleyb	DESIGNED - MK	REVISED	
	CHECKED - DD	REVISED	
PLOT SCALE = N.T.S.	DRAWN - BRD	REVISED	
PLOT DATE = 12/17/2013	CHECKED - DD	REVISED	

STATE OF ILLINOIS
DEPARTMENT OF TRANSPORTATION

TOP OF SLAB ELEVATIONS – IV
STRUCTURE NO. 016–1711

SHEET NO. S-12 OF S-47 SHEETS

F.A.I. RTE.	SECTION	COUNTY	TOTAL SHEETS	SHEET NO.
90/94/290	2013-036R	COOK	256	104

CONTRACT NO. 60W71

ILLINOIS FED. AID PROJECT -NUMBER-

BEAM 12

Location	Station	Offset	Theoretical Grade Elevations	Theoretical Grade Elevations Adjusted For Dead Load Deflection
*Bk. W. Abut.	7811+74.00	31.625	597.79	597.79
*℄ Brg. W. Abut.	7811+77.00	31.625	597.88	597.88
*A	7811+87.00	31.625	598.35	598.41
B	7811+97.00	31.625	598.78	598.90
C	7812+07.00	31.625	599.04	599.19
D	7812+17.00	31.625	599.30	599.47
E	7812+27.00	31.625	599.55	599.71
F	7812+37.00	31.625	599.75	599.89
G	7812+47.00	31.625	599.90	600.00
H	7812+57.00	31.625	599.99	600.05
I	7812+67.00	31.625	600.04	600.05
℄ Pier	7812+73.25	31.625	600.05	600.05
J	7812+83.25	31.625	600.02	600.01
K	7812+93.25	31.625	599.93	599.92
L	7813+03.25	31.625	599.80	599.80
M	7813+13.25	31.625	599.62	599.62
N	7813+23.25	31.625	599.39	599.40
O	7813+33.25	31.625	599.11	599.11
℄ Brg. E. Abut.	7813+41.25	31.625	598.84	598.84
Bk. E. Abut.	7813+44.25	31.625	598.74	598.74

*Adjusted for sidewalk ramp slopes.

0161711-60W71-S13-TopSlab

AECOM

USER NAME = dunkerleyb	DESIGNED - MK	REVISED	
	CHECKED - DD	REVISED	
PLOT SCALE = N.T.S.	DRAWN - BRD	REVISED	
PLOT DATE = 12/17/2013	CHECKED - DD	REVISED	

STATE OF ILLINOIS
DEPARTMENT OF TRANSPORTATION

TOP OF SLAB ELEVATIONS – V
STRUCTURE NO. 016–1711
SHEET NO. S-13 OF S-47 SHEETS

F.A.I. RTE.	SECTION	COUNTY	TOTAL SHEETS	SHEET NO.
90/94/290	2013-036R	COOK	256	105
		CONTRACT NO. 60W71		
	ILLINOIS	FED. AID PROJECT -NUMBER-		

NORTH EDGE OF PAVEMENT

Location	Station	Offset	Theoretical Grade Elevations
West End of Appr. Slab	7811+44.50	-32.667′	597.64
A	7811+54.50	-32.667′	597.78
B	7811+64.50	-32.667′	597.98
East End of Appr. Slab	7811+74.50	-32.667′	598.23

NORTH CURB LINE

Location	Station	Offset	Theoretical Grade Elevations
West End of Appr. Slab	7811+44.50	-22.000′	597.37
A	7811+54.50	-22.000′	597.51
B	7811+64.50	-22.000′	597.71
East End of Appr. Slab	7811+74.50	-22.000′	597.96

℄ HARRISON ST. & PGL

Location	Station	Offset	Theoretical Grade Elevations
West End of Appr. Slab	7811+44.50	0.000′	597.71
A	7811+54.50	0.000′	597.85
B	7811+64.50	0.000′	598.05
East End of Appr. Slab	7811+74.50	0.000′	598.30

SOUTH CURB LINE

Location	Station	Offset	Theoretical Grade Elevations
West End of Appr. Slab	7811+44.50	22.000′	597.37
A	7811+54.50	22.000′	597.51
B	7811+64.50	22.000′	571.71
East End of Appr. Slab	7811+74.50	22.000′	597.96

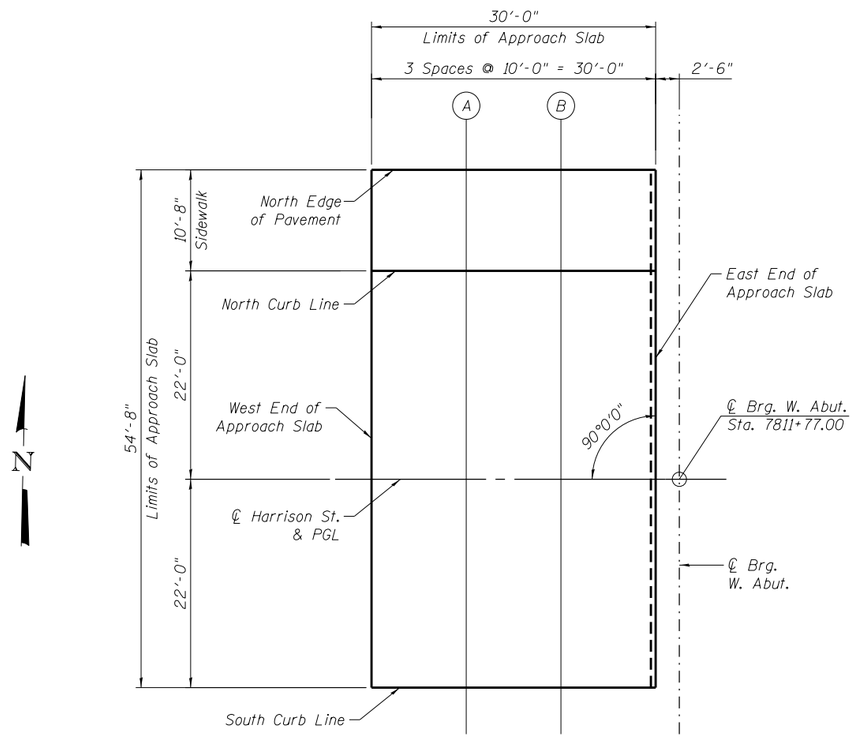

PLAN

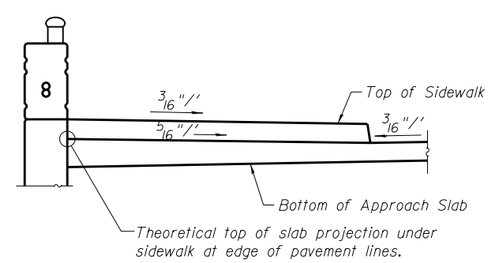

PROJECTION UNDER SIDEWALK
(North Sidewalk)

0161711-60W71-S14-ApprSlab

AECOM	USER NAME = dunkerleyb	DESIGNED - MK	REVISED	STATE OF ILLINOIS DEPARTMENT OF TRANSPORTATION	TOP OF WEST APPROACH SLAB ELEVATION STRUCTURE NO. 016-1711
		CHECKED - DD	REVISED		
	PLOT SCALE = N.T.S.	DRAWN - BRD	REVISED		
	PLOT DATE = 12/17/2013	CHECKED - DD	REVISED		SHEET NO. S-14 OF S-47 SHEETS

F.A.I. RTE.	SECTION	COUNTY	TOTAL SHEETS	SHEET NO.
90/94/290	2013-036R	COOK	256	106
		CONTRACT NO. 60W71		
	ILLINOIS	FED. AID PROJECT -NUMBER-		

NORTH EDGE OF PAVEMENT

Location	Station	Offset	Theoretical Grade Elevations
West End of Appr. Slab	7813+43.75	-32.667′	598.79
A	7813+53.75	-32.667′	598.45
B	7813+63.75	-32.667′	598.11
East End of Appr. Slab	7813+73.75	-32.667′	597.77

NORTH CURB LINE

Location	Station	Offset	Theoretical Grade Elevations
West End of Appr. Slab	7813+43.75	-22.000′	598.51
A	7813+53.75	-22.000′	598.17
B	7813+63.75	-22.000′	597.83
East End of Appr. Slab	7813+73.75	-22.000′	597.49

℄ HARRISON ST. & PGL

Location	Station	Offset	Theoretical Grade Elevations
West End of Appr. Slab	7813+43.75	0.000′	598.85
A	7813+53.75	0.000′	598.51
B	7813+63.75	0.000′	598.17
East End of Appr. Slab	7813+73.75	0.000′	597.83

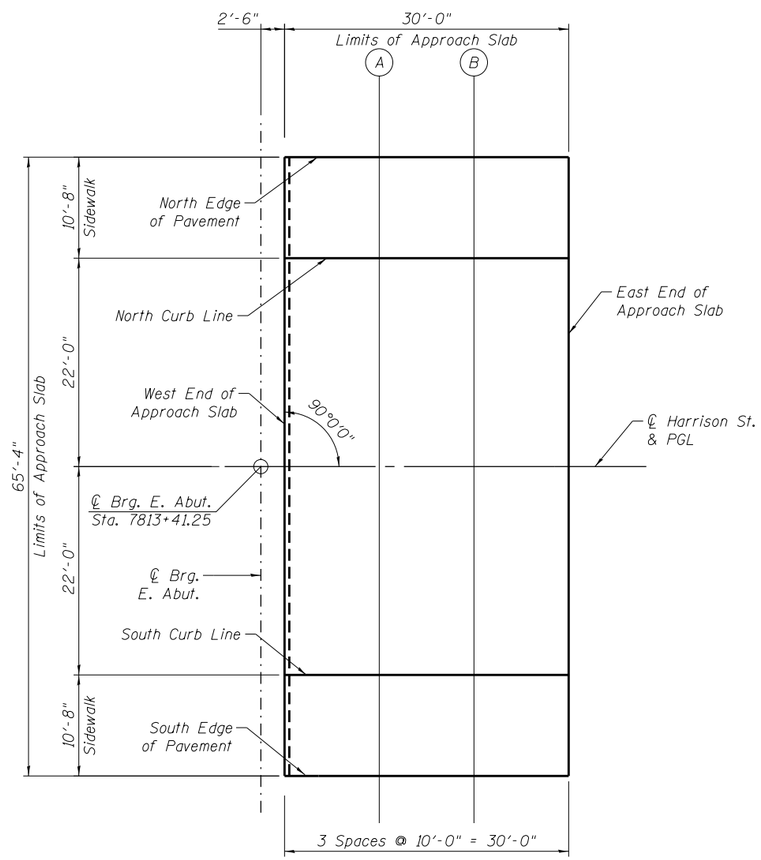

PLAN

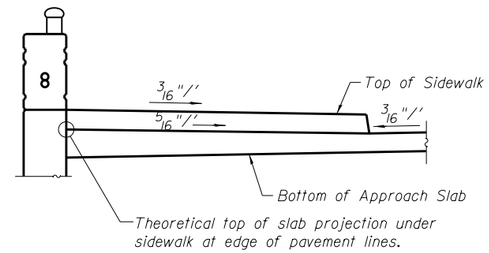

PROJECTION UNDER SIDEWALK

SOUTH CURB LINE

Location	Station	Offset	Theoretical Grade Elevations
West End of Appr. Slab	7813+43.75	22.000′	598.51
A	7813+53.75	22.000′	598.17
B	7813+63.75	22.000′	597.83
East End of Appr. Slab	7813+73.75	22.000′	597.49

SOUTH EDGE OF PAVEMENT

Location	Station	Offset	Theoretical Grade Elevations
West End of Appr. Slab	7813+43.75	32.667′	598.79
A	7813+53.75	32.667′	598.45
B	7813+63.75	32.667′	598.11
East End of Appr. Slab	7813+73.75	32.667′	597.77

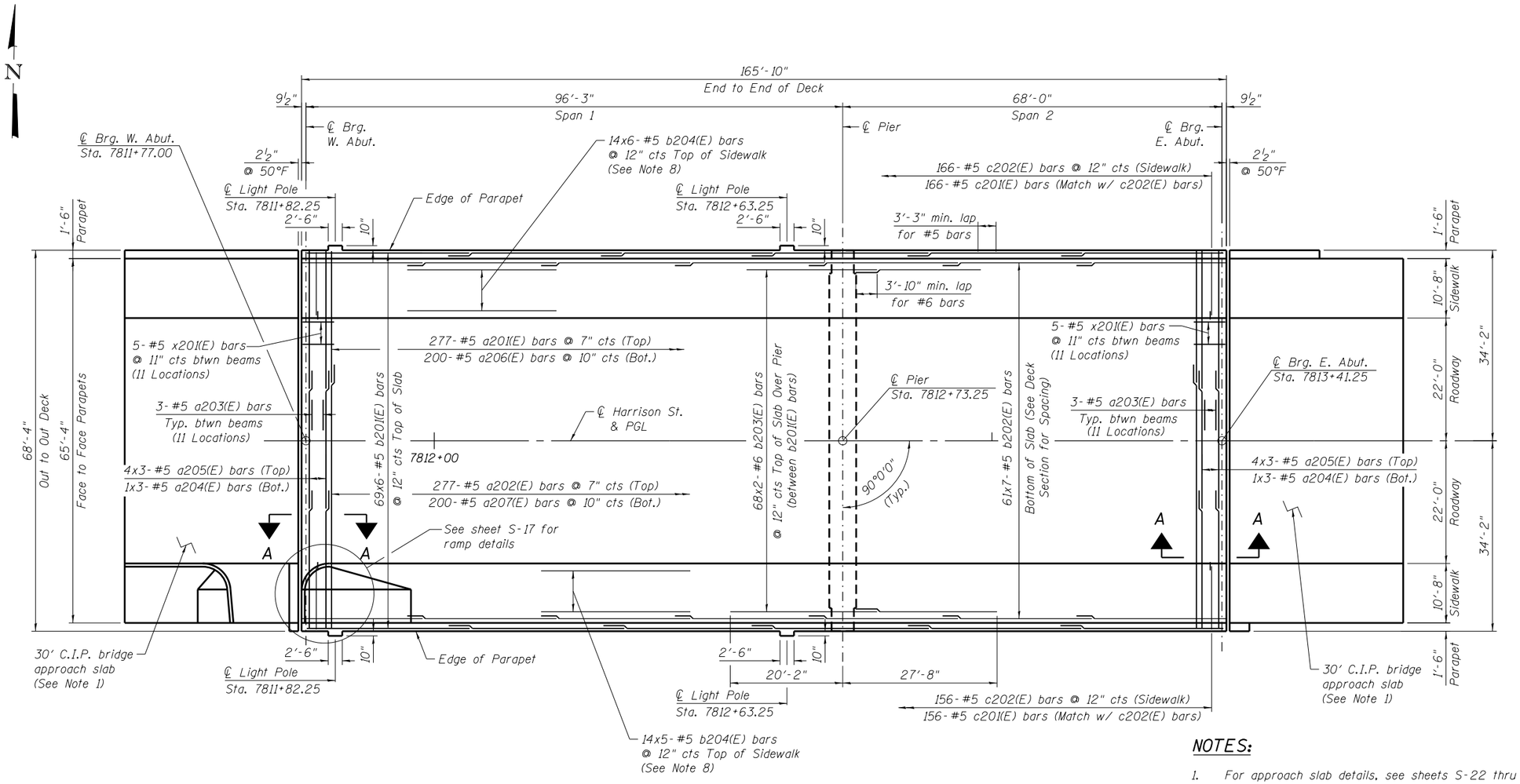

DECK PLAN

NOTES:

1. For approach slab details, see sheets S-22 thru S-25.
2. For reinforcement details at light poles, see sheet S-19.
3. Bars indicated thus:
   68x10-#5 etc. indicates 68 lines of bars with 10 lengths per line.
4. See Sheet S-20 for Section A-A.
5. Parapet reinforcement not shown for clarity. See sheet S-19 for details.
6. Dimensions are based on a Rolled Rail Strip Seal Joint. If the Contract elects to use the Welded Rail Strip Seal Joint, deck dimensions may req. adjustments to satisfy the details on sheet S-26.
7. See sheet S-20 for Superstructure Bill of Material.
8. See Section Thru Sidewalk for bar arrangement on Sheet S-20.

0161711-60W71-S16-Deck

AECOM	USER NAME = dunkerleyb	DESIGNED - DEV	REVISED
		CHECKED - DD	REVISED
	PLOT SCALE = N.T.S.	DRAWN - DEV	REVISED
	PLOT DATE = 12/17/2013	CHECKED - DD	REVISED

STATE OF ILLINOIS
DEPARTMENT OF TRANSPORTATION

DECK PLAN – I
STRUCTURE NO. 016-1711
SHEET NO. S-16 OF S-47 SHEETS

F.A.I. RTE.	SECTION	COUNTY	TOTAL SHEETS	SHEET NO.
90/94/290	2013-036R	COOK	256	108
		CONTRACT NO. 60W71		
	ILLINOIS FED. AID PROJECT -NUMBER-			

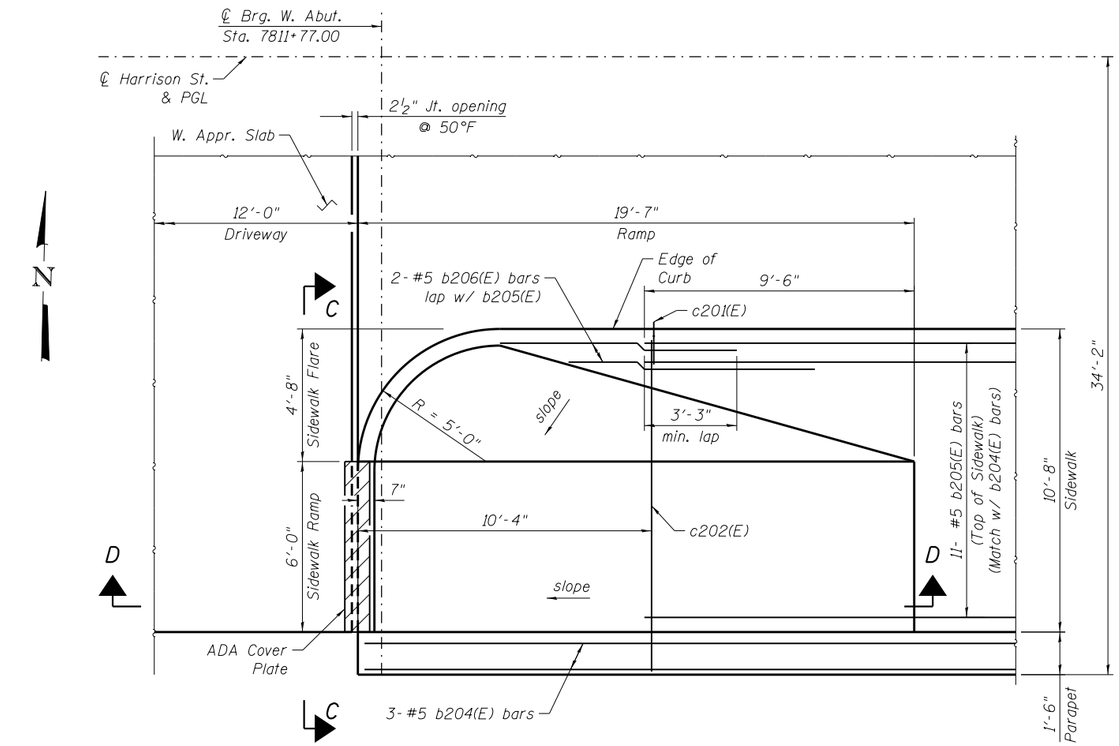

SIDEWALK RAMP PLAN

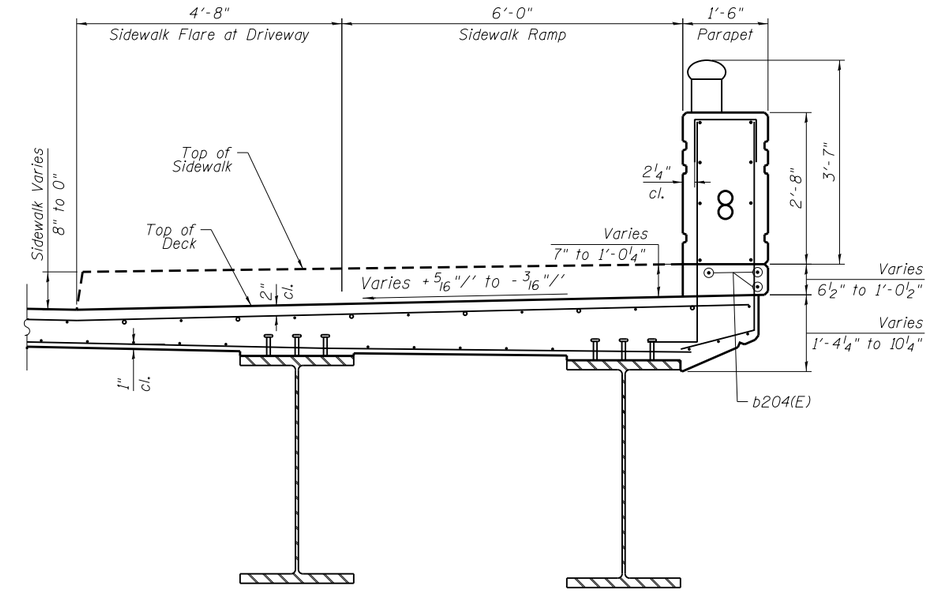

SECTION C-C THRU SOUTH SIDEWALK RAMP

(Facing East)

NOTES:

1. Work this sheet with S-16.
2. See Civil plans for driveway flare details.
3. See sheet S-26 for Expansion Joint details and ADA cover plate details.
4. Sign Panel, channels, bolts, and fasteners are included in Civil pay item Sign Panel - Type 3 (Special). See Civil Plans for details.

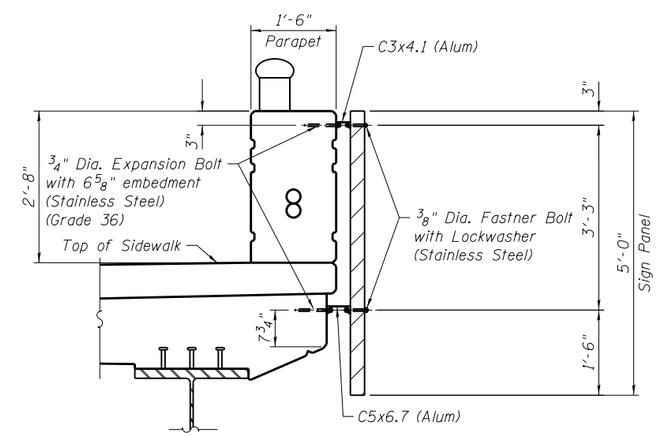

SECTION AT SIGN PANEL

(See Note 4)

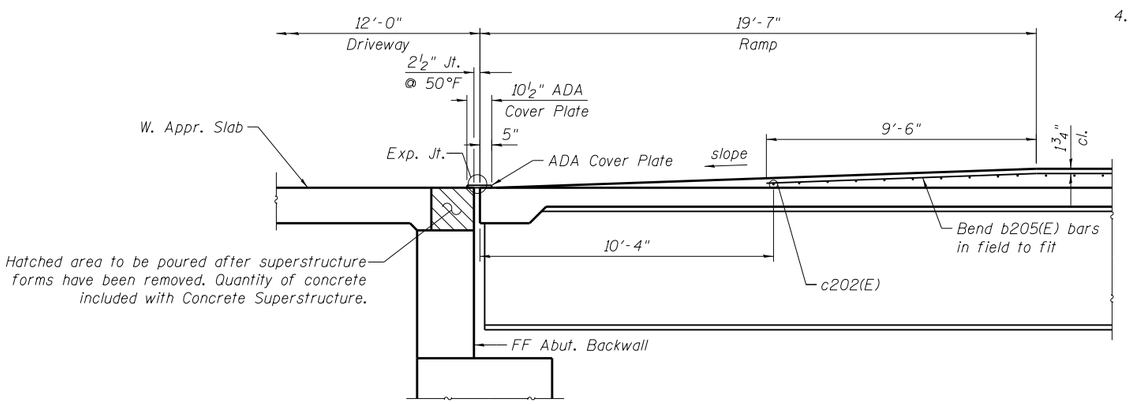

SECTION D-D: SIDEWALK RAMP ELEVATION

(Facing North)

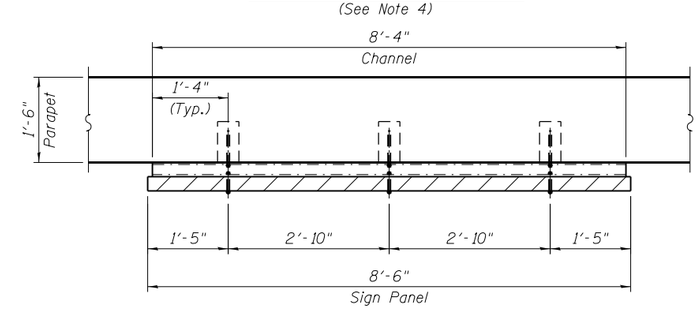

PLAN

USER NAME = dunkerleyb	DESIGNED - DEV	REVISED	
	CHECKED - DD	REVISED	
PLOT SCALE = N.T.S.	DRAWN - DEV	REVISED	
PLOT DATE = 12/17/2013	CHECKED - DD	REVISED	

AECOM

STATE OF ILLINOIS
DEPARTMENT OF TRANSPORTATION

DECK PLAN – II
STRUCTURE NO. 016-1711

SHEET NO. S-17 OF S-47 SHEETS

F.A.I. RTE.	SECTION	COUNTY	TOTAL SHEETS	SHEET NO.
90/94/290	2013-036R	COOK	256	109

CONTRACT NO. 60W71

ILLINOIS FED. AID PROJECT -NUMBER-

0161711-60W71-S17-Deck

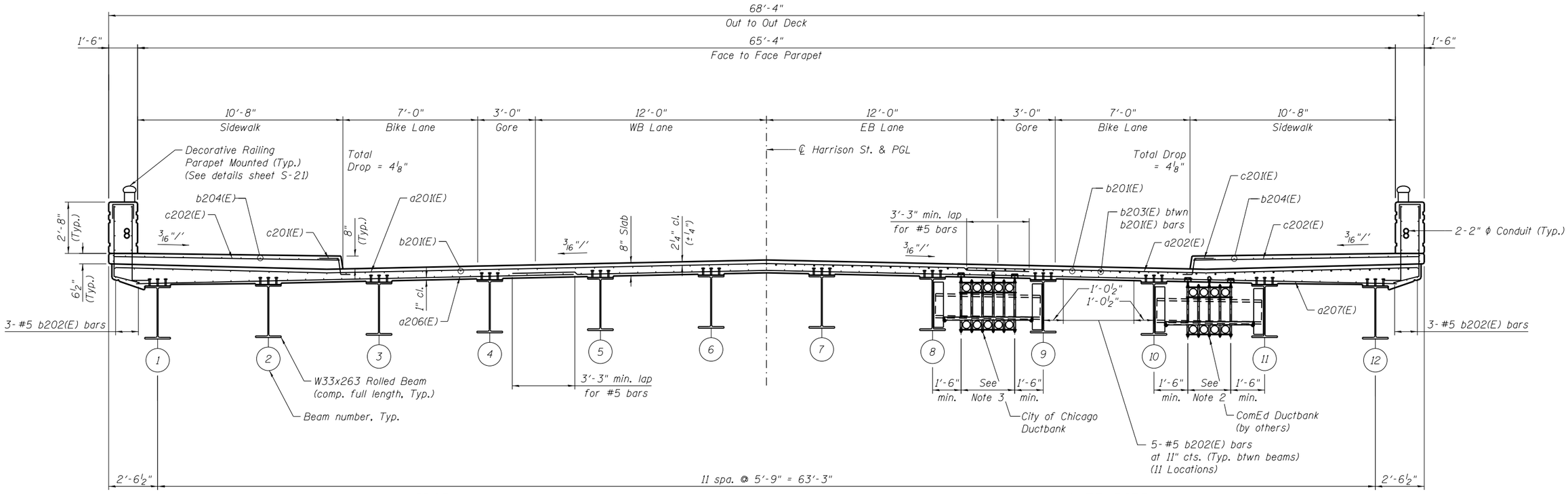

DECK CROSS SECTION

(Facing East)

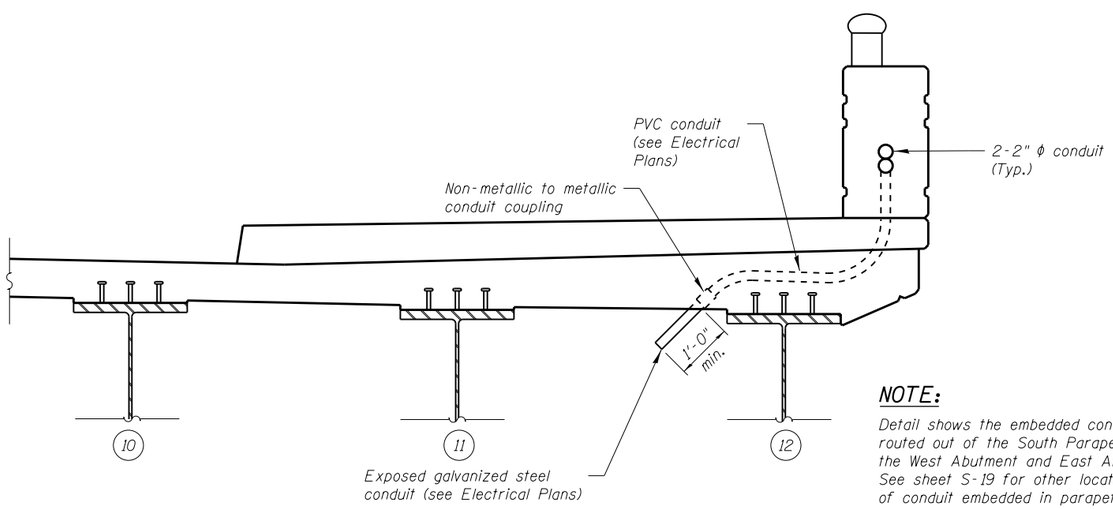

CONDUIT EMBEDDED IN DECK DETAIL

NOTE:

Detail shows the embedded conduits routed out of the South Parapet into the West Abutment and East Abutment. See sheet S-19 for other locations of conduit embedded in parapet.

NOTES:

1. Work this sheet with sheet S-16.
2. Proposed conduit support system is shown for information only on sheets 135A thru 135C. The concrete inserts will be provided to the Contractor by ComEd. The Contractor is responsible for placing inserts per layout details and ComEd direction. ComEd may elect to provide support to Contractor for final insert placement in advance of pouring concrete. There is no separate payment for the placement of inserts. The work involved in placing inserts is included within Concrete Superstructure.
3. Space inserts at 10'-0" cts max longitudinally, full length of bridge (see framing plans). Cost of inserts included in Concrete Superstructure. See electrical plans for conduit support and insert details.

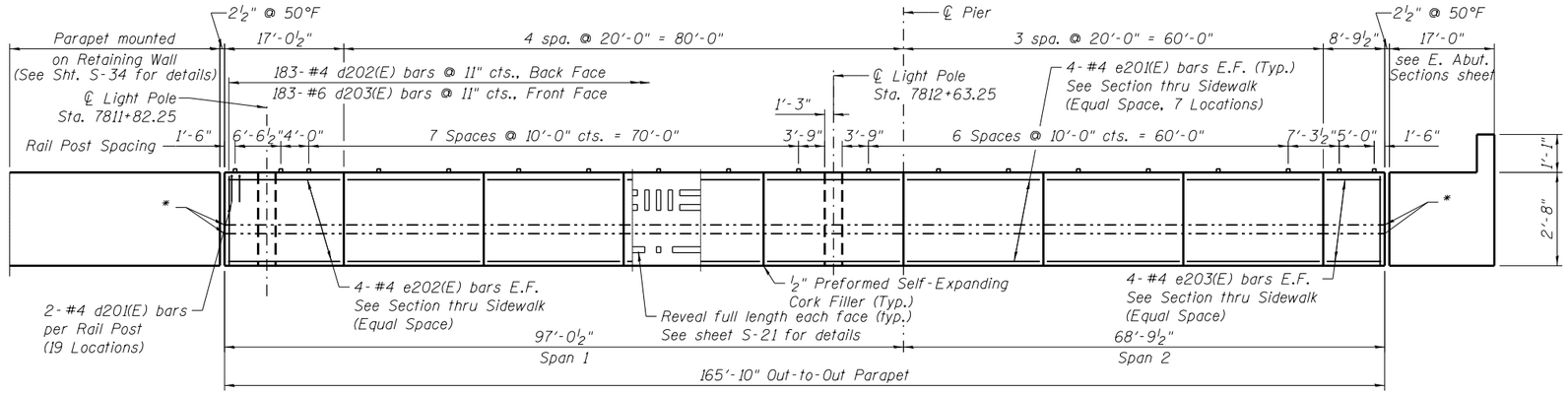

INSIDE ELEVATION OF NORTH PARAPET

(Facing North)

* Provide conduit expansion/deflection fitting at all expansion joints.

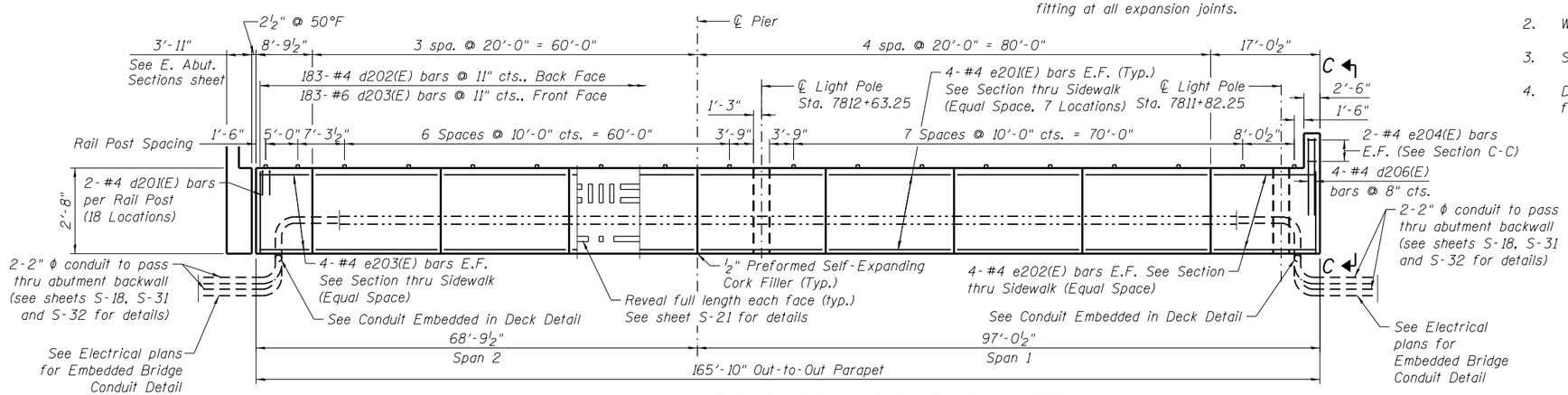

INSIDE ELEVATION OF SOUTH PARAPET

(Facing South)

NOTES:

1. Contractor to provide expansion/deflection conduit fittings at all structural expansion joints. See lighting plans for expansion/deflection fitting installation details.
2. Work this sheet with S-18 and S-20.
3. See sheet S-21 for additional rail details.
4. Decorative Rail Parapet Mounted is continuous in front of light poles.

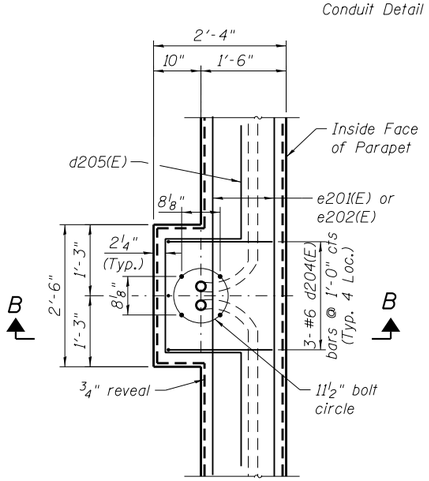

PLAN

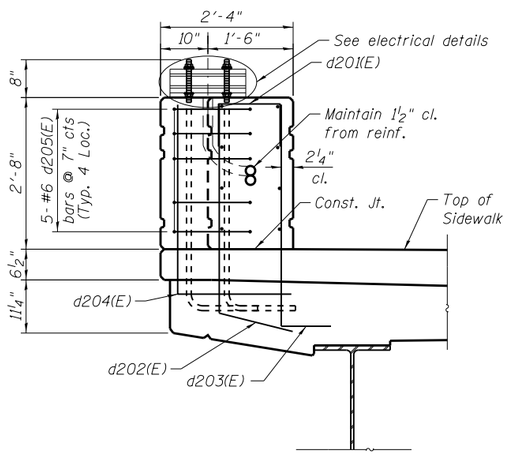

SECTION B-B

PARAPET DETAIL AT LIGHTPOLE

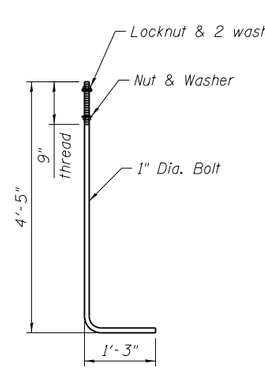

ANCHOR ROD

Cost of anchor rods is included with Concrete Superstructure. (ASTM F 1554 Grade 105) Full length hot dipped galvanized

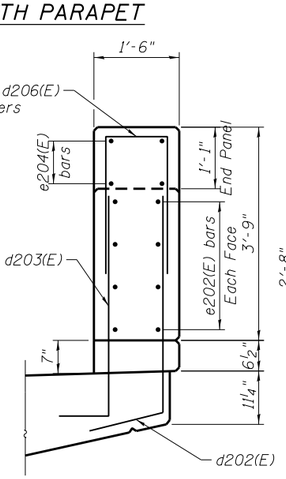

SECTION C-C

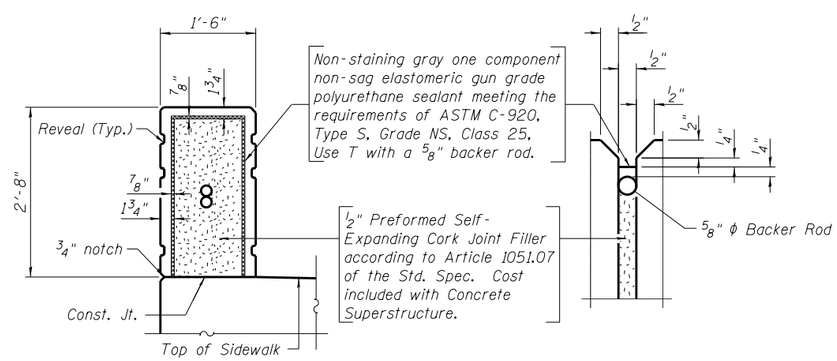

PARAPET JOINT DETAILS

AECOM	USER NAME = dunkerleyb	DESIGNED - DEV	REVISED
		CHECKED - DD	REVISED
	PLOT SCALE = N.T.S.	DRAWN - DEV	REVISED
	PLOT DATE = 12/17/2013	CHECKED - DD	REVISED

STATE OF ILLINOIS
DEPARTMENT OF TRANSPORTATION

PARAPET ELEVATIONS
STRUCTURE NO. 016-1711

SHEET NO. S-19 OF S-47 SHEETS

F.A.I. RTE.	SECTION	COUNTY	TOTAL SHEETS	SHEET NO.
90/94/290	2013-036R	COOK	256	111
		CONTRACT NO. 60W71		
	ILLINOIS	FED. AID PROJECT -NUMBER-		

016171I-60W71-S19-Parapet

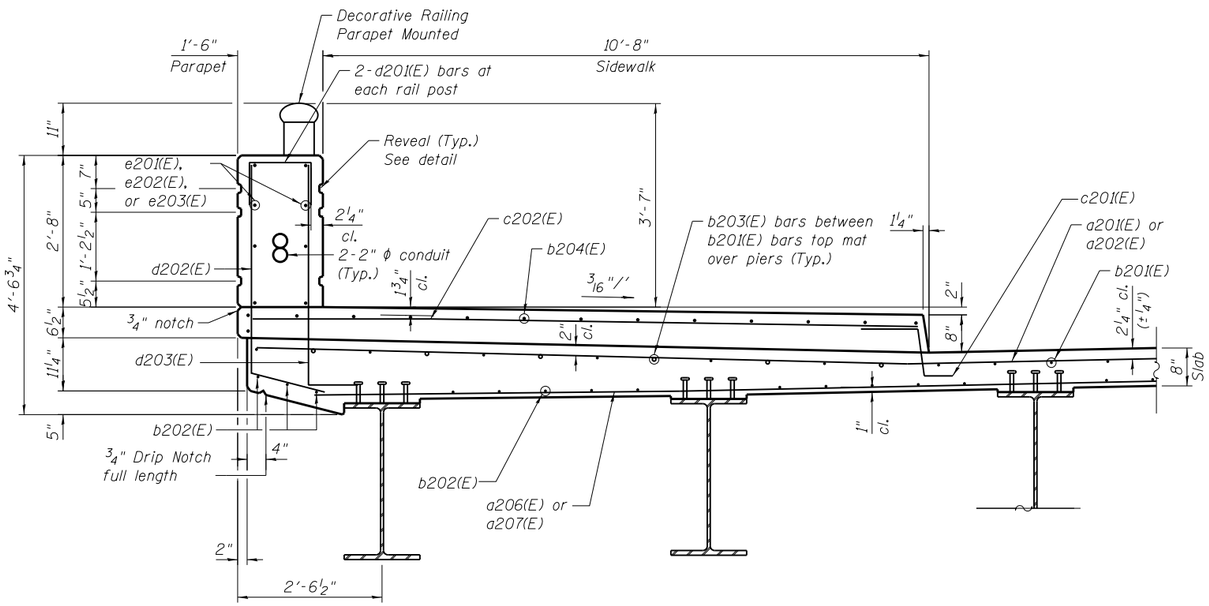

SECTION THRU SIDEWALK

(Typ. both sidewalks)

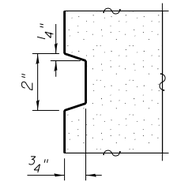

REVEAL DETAIL

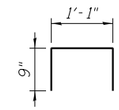

BAR d201(E)

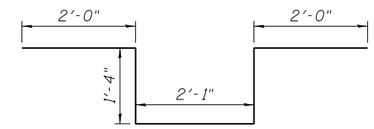

BAR d205(E)

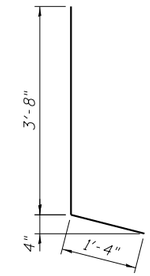

BAR d202(E)

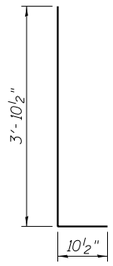

BAR d203(E)

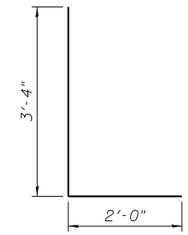

BAR d204(E)

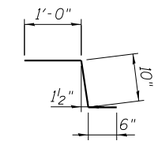

BAR c201(E)

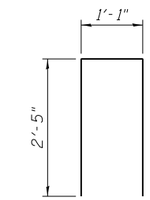

BAR d206(E)

BILL OF MATERIAL

Bar	No.	Size	Length	Shape
a201(E)	277	#5	47'-4"	
a202(E)	277	#5	23'-7"	
a203(E)	66	#5	6'-8"	
a204(E)	6	#5	23'-2"	
a205(E)	24	#5	24'-9"	
a206(E)	200	#5	22'-5"	
a207(E)	200	#5	46'-1"	
b201(E)	414	#5	30'-4"	
b202(E)	427	#5	26'-6"	
b203(E)	136	#6	25'-10"	
b204(E)	157	#5	30'-4"	
b205(E)	11	#5	20'-5"	
b206(E)	2	#5	8'-8"	
c201(E)	322	#5	2'-4"	
c202(E)	322	#5	11'-8"	
d201(E)	74	#4	2'-7"	
d202(E)	366	#4	5'-0"	
d203(E)	366	#6	4'-9"	
d204(E)	12	#6	5'-4"	
d205(E)	20	#6	8'-9"	
d206(E)	4	#4	5'-11"	
e201(E)	112	#4	19'-8"	
e202(E)	16	#4	16'-8"	
e203(E)	16	#4	8'-5"	
e204(E)	4	#4	2'-2"	
x201(E)	110	#5	6'-5"	
Reinforcement Bars, Epoxy Coated			Pound	82,920
Concrete Superstructure			Cu. Yd.	490
Bridge Deck Grooving			Sq. Yd.	788
Protective Coat			Sq. Yd.	1,383

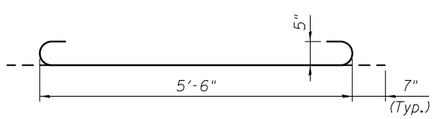

BAR a203(E)

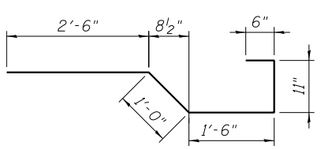

BAR x201(E)

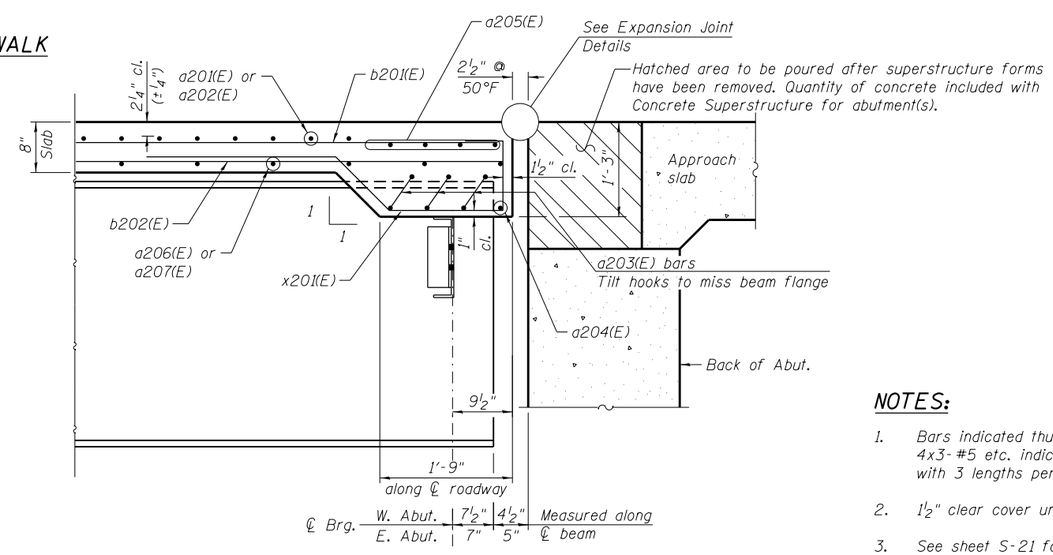

SECTION A-A AT EXPANSION JOINT

(Typ. both ends of deck)

NOTES:

1. Bars indicated thus: 4x3-#5 etc. indicates 4 lines of bars with 3 lengths per line.
2. 1½" clear cover unless noted otherwise.
3. See sheet S-21 for Decorative Railing Details.
4. See sheet S-26 for Expansion Joint Details.

* Dimensions vary per location.
** Some interior panels are not 20' long.

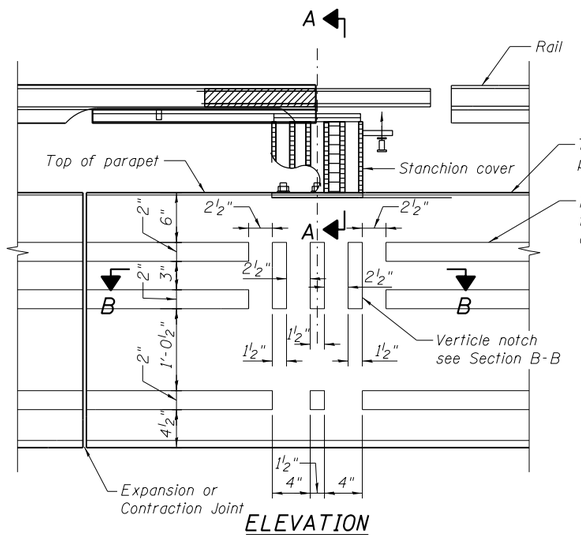

ELEVATION

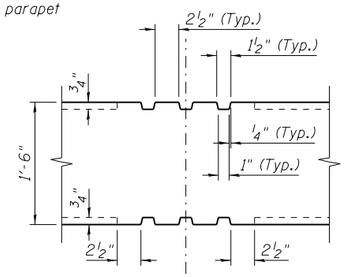

SECTION B-B

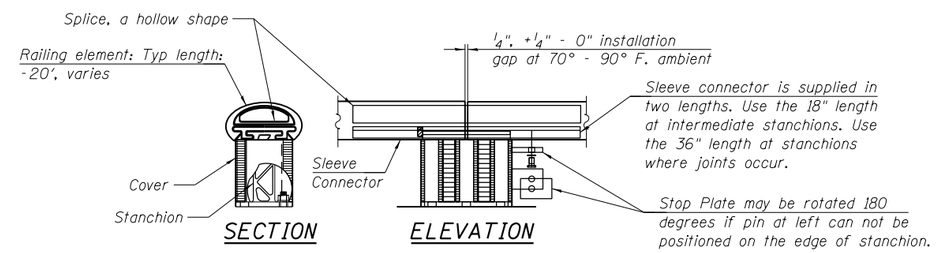

SECTION ELEVATION

STANCHION

TYPICAL CHICAGO PARAPET DETAIL

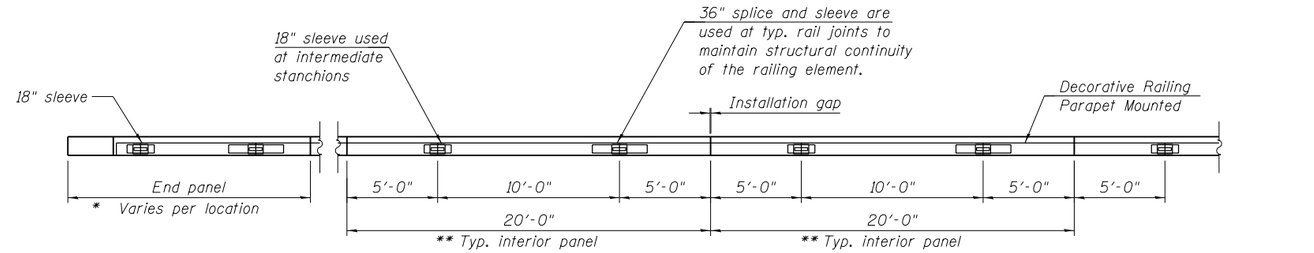

PLAN

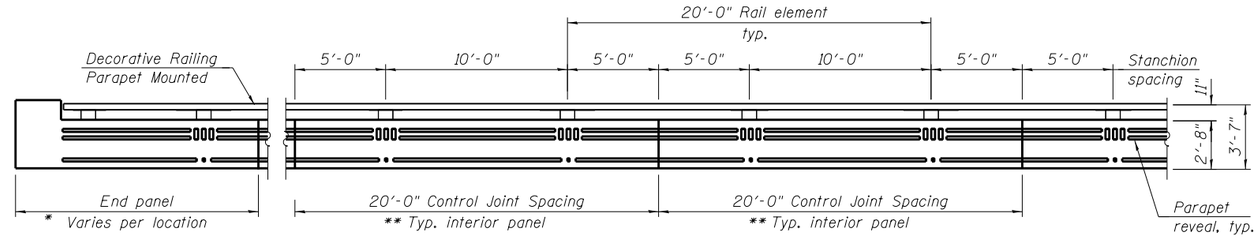

ELEVATION

RAIL DETAIL - STANCHION LOCATION AND SPACING

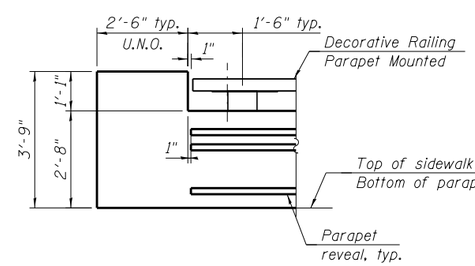

RAIL DETAIL AT END OF PARAPET

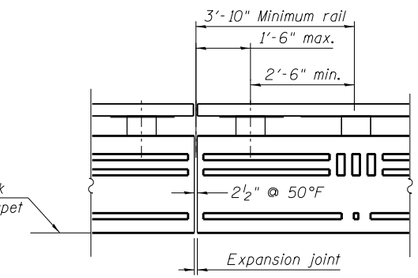

RAIL DETAIL AT EXPANSION JOINT

NOTES:

1. When walls without rail are adjacent to Chicago wall with rail, their traffic face, or the terminus of their traffic face, must be in the same plane as Chicago wall with rail.
2. Rustication may vary at terminal ends and is subject to site conditions and site approval. In all other situations, the middle 2.5" x 1.5" rustication is aligned with the center of the stanchion.
3. Wall details above show that portion of the wall above the gutter break, the substructure is not shown. Note that substructure(s) depth variations could significantly alter the required top of wall profile.
4. Field cutting of rail elements is acceptable. The cut edge will no longer be anodized. Saw cut only, flame cut not allowed.
5. End caps shall be used at all rail terminals.
6. Railing system to be produced using extruded aluminum that can be clear anodized.
7. Alloy selection is based upon the above color requirement and the engineering sufficiency analysis which must be supplied by the contractor.
8. The reveal on the bridge parapet Chicago wall will not be paid separately and shall be included in the cost of the pay item "Concrete Superstructure". Shop drawings shall be submitted including layout of the Chicago wall pattern, Chicago rail and light poles.

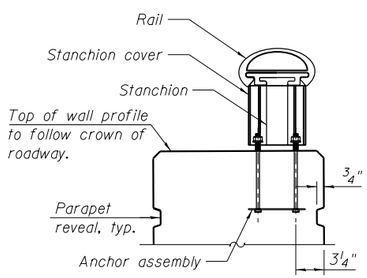

SECTION A-A

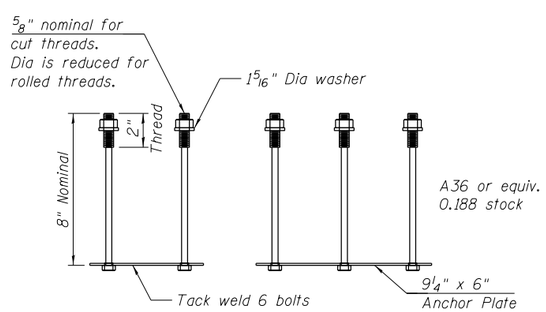

ANCHOR ASSEMBLY NOTES:

1. All fasteners to meet, or exceed, A-307 strength requirements.
2. Galvanize per A-153 after fabrication.
3. The size and position of parapet reinforcing must be consistent with capture of the anchor assembly. See structural drawings for rebar details.

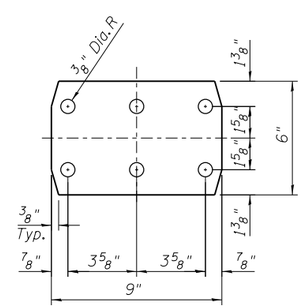

ELASTOMERIC PAD

ELASTOMERIC PAD NOTES:

1. Elastomeric pad for stanchion made from 1/16" thick stock.
2. One required per stanchion.

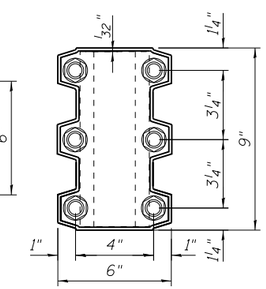

PLAN VIEW

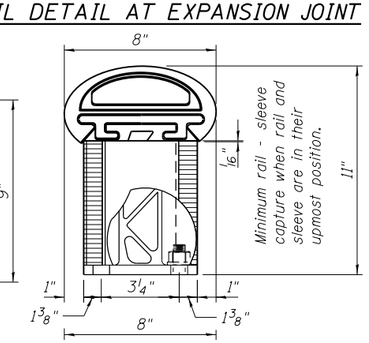

ELEVATION

STANCHION COVER

STANCHION COVER NOTES:

1. Cover is shown superimposed over stanchion with anchors in place.
2. The stanchion cover is a non-structural element, serving an aesthetic function. It rests on the flange of the stanchion, without fasteners and is captured in place by the rail and stanchion.

BILL OF MATERIAL

Item	Unit	Quantity
Decorative Railing (Parapet Mounted)	Foot	405

AECOM	USER NAME = dunkerleyb	DESIGNED - EJO	REVISED
		CHECKED - DD	REVISED
	PLOT SCALE = N.T.S.	DRAWN - BRD	REVISED
	PLOT DATE = 12/17/2013	CHECKED - DD	REVISED

STATE OF ILLINOIS
DEPARTMENT OF TRANSPORTATION

PARAPET AND DECORATIVE RAILING PARAPET MOUNTED DETAILS
STRUCTURE NO. 016-1711
SHEET NO. S-21 OF S-47 SHEETS

F.A.I. RTE.	SECTION	COUNTY	TOTAL SHEETS	SHEET NO.
90/94/290	2013-036R	COOK	256	113
		CONTRACT NO. 60W71		
	ILLINOIS	FED. AID PROJECT -NUMBER-		

0161711-60W71-S21-Parapet

** Preformed Flexible Foam Expansion Joint Filler according to Article 1051.09 of Standard Specifications. Full depth of slab, full length of slab.

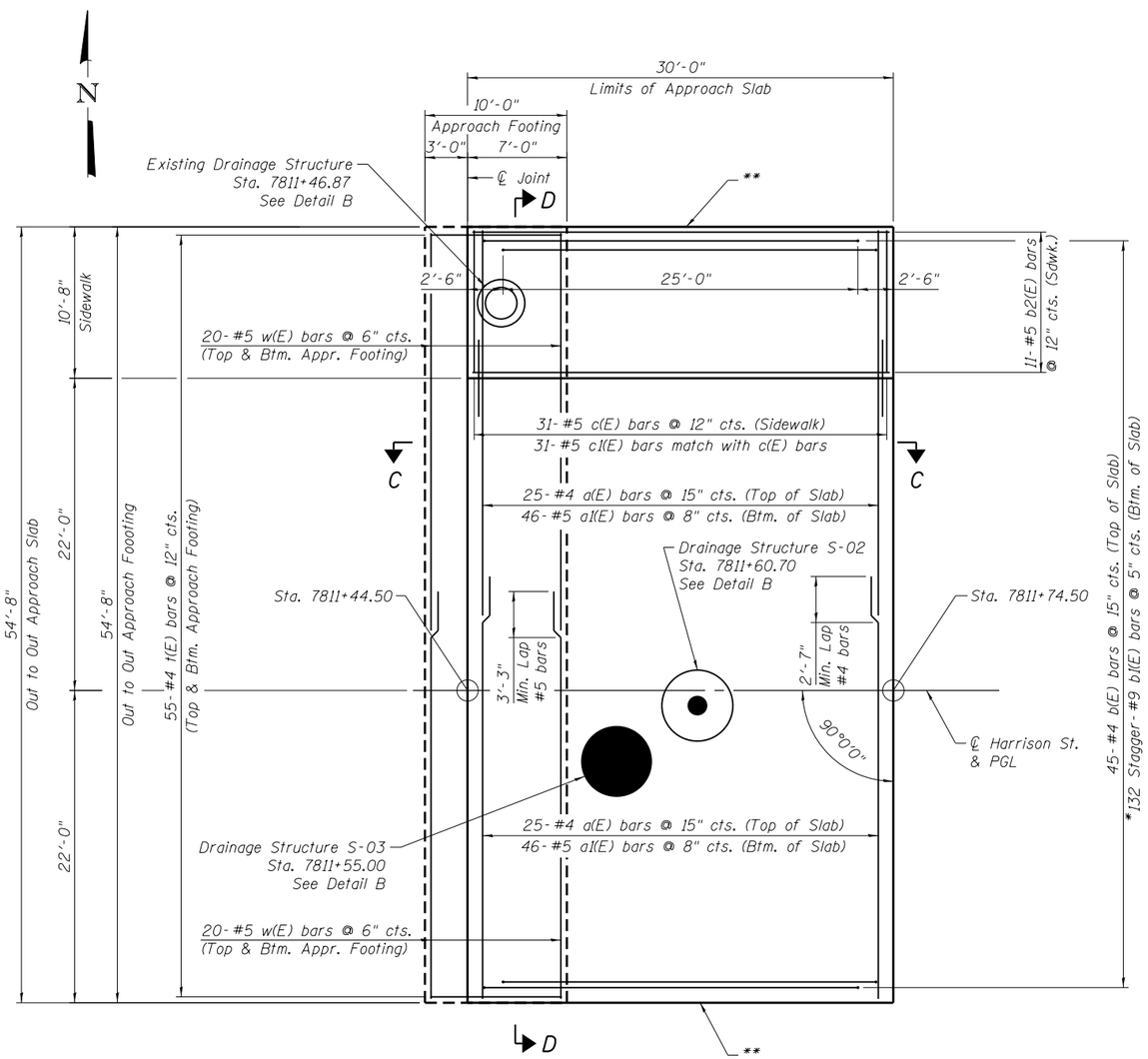

PLAN

*Tilt #9 b1(E) bars as required to maintain clearances.

*** Cost included with Concrete Superstructure.

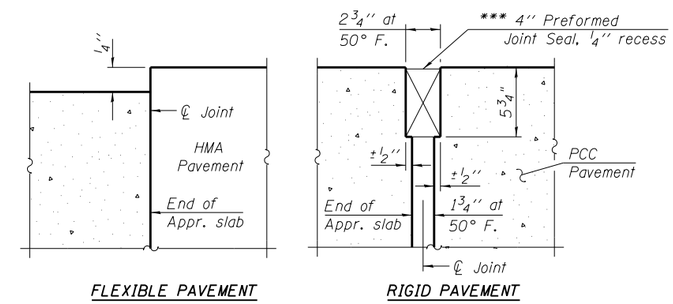

FLEXIBLE PAVEMENT

RIGID PAVEMENT

DETAIL A

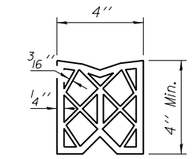

PREFORMED JOINT SEAL

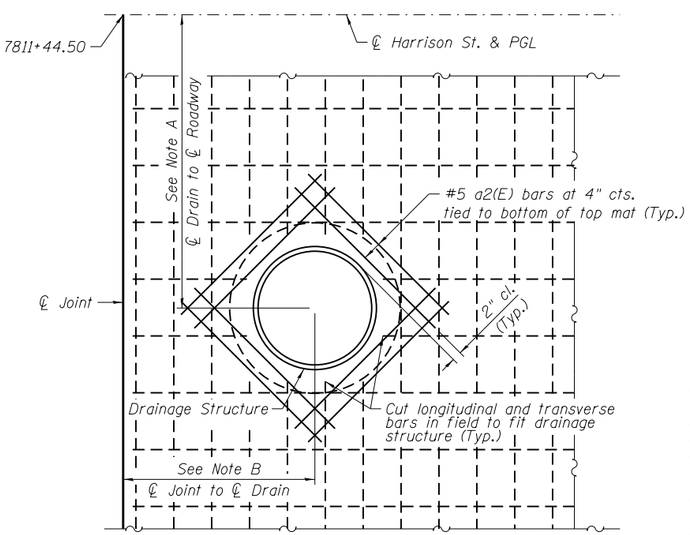

DETAIL B (TYP)

Cost of cutting bars included in Reinforcement Bars, Epoxy Coated

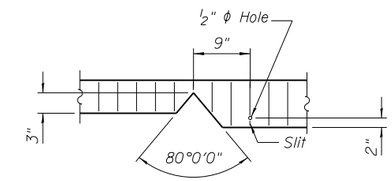

SEAL CUT-OUT AT CURB

NOTE A:

For Drainage Structure S-02 = 1'-0 3/4" (South)
For Drainage Structure S-03 = 5'-0" (South)
For Exist. Drainage Structure = 27'-3 1/2" (North)

NOTE B:

For Drainage Structure S-02 = 16'-2 3/8"
For Drainage Structure S-03 = 10'-6"
For Existing Drainage Structure = 2'-4 3/8"

NOTES:

1. See sheet S-23 of S-47 for Sections C-C & D-D.
2. See Civil plans for drainage structure details.

0161711-60W71-S22-Appr Slab

AECOM	USER NAME = dunkerleyb	DESIGNED - EJO	REVISED	STATE OF ILLINOIS DEPARTMENT OF TRANSPORTATION	WEST APPROACH SLAB PLAN STRUCTURE NO. 016-1711	F.A.I. RTE.	SECTION	COUNTY	TOTAL SHEETS / SHEET NO.
		CHECKED - DD	REVISED			90/94/290	2013-036R	COOK	256 / 114
	PLOT SCALE = N.T.S.	DRAWN - BRD	REVISED					CONTRACT NO. 60W71	
	PLOT DATE = 12/17/2013	CHECKED - DD	REVISED		SHEET NO. S-22 OF S-47 SHEETS		ILLINOIS	FED. AID PROJECT -NUMBER-	

NOTES:

See sheet S-22 of S-47 for Detail A.
Approach slab concrete shall be paid for as Concrete Superstructure.
Approach footing concrete shall be paid for as Concrete Structures.
Reinforcement shall be paid for as Reinforcement Bars, Epoxy Coated.
For v(E) bar details, see sheet S-31 of S-47.
The approach footing maximum applied service bearing pressure (Qmax) = 2.0 ksf.
For bar splicer details, see sheet S-44 of S-47.
Cost of excavation for approach footing included with Concrete Structures.
For Granular Backfill for Structures details, see sheet S-03 of S-47.

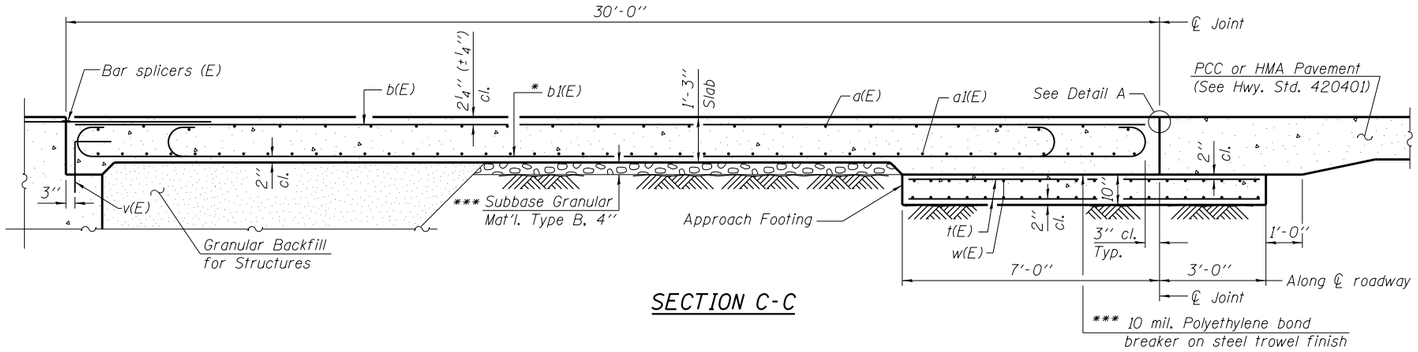

SECTION C-C

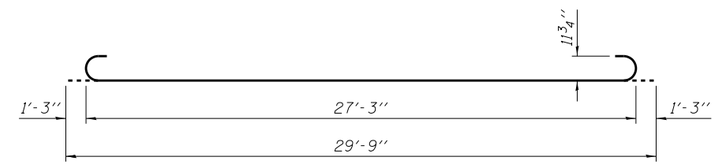

BAR b1(E)

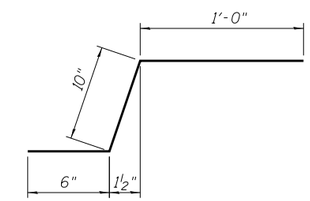

BAR c1(E)

* Tilt #9 b1(E) bars as required to maintain clearance.

*** Cost included with Concrete Superstructure.

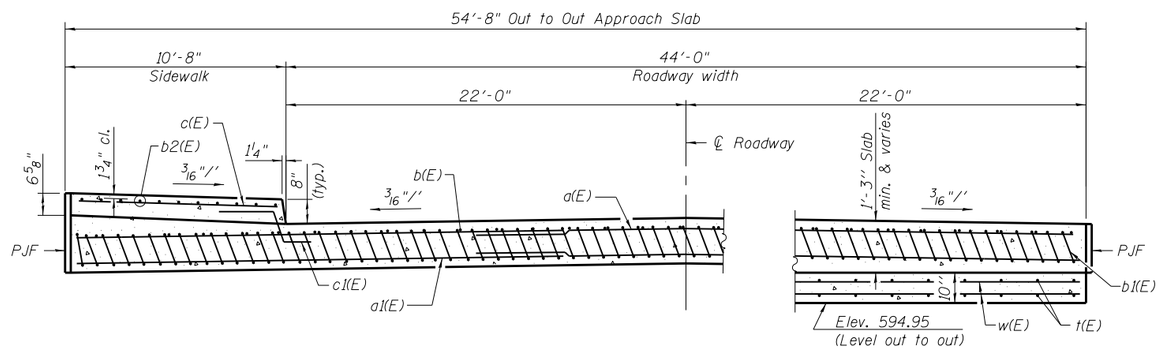

NEAR ABUTMENT

AT APPROACH FOOTING

SECTION D-D

(See Plan for dimensions not shown)

BILL OF MATERIAL

Bar	No.	Size	Length	Shape
a(E)	50	#4	28'-6"	
a1(E)	92	#5	28'-10"	
a2(E)	24	#5	3'-6"	
b(E)	45	#4	29'-8"	
b1(E)	132	#9	29'-9"	
b2(E)	11	#5	29'-8"	
c(E)	31	#5	10'-4"	
c1(E)	31	#5	2'-4"	
t(E)	110	#4	9'-8"	
w(E)	80	#5	28'-10"	
Concrete Superstructure			Cu. Yd.	92
Concrete Structures			Cu. Yd.	17
Reinforcement Bars, Epoxy Coated			Pound	21,920
Protective Coat			Sq. Yd.	194
Bridge Deck Grooving			Sq. Yd.	140

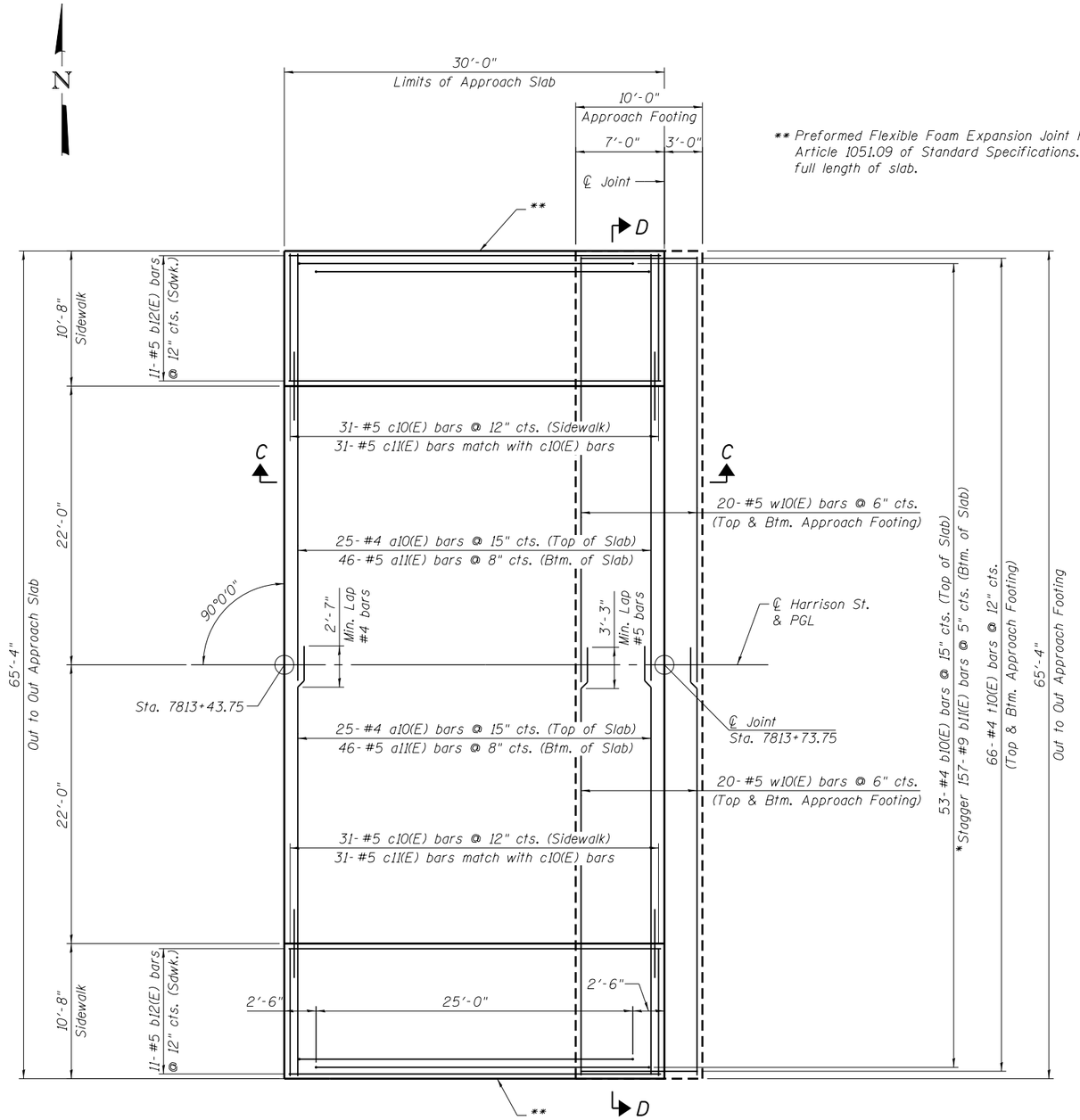

PLAN

** Preformed Flexible Foam Expansion Joint Filler according to Article 1051.09 of Standard Specifications. Full depth of slab. full length of slab.

* Tilt #9 b11(E) bars as required to maintain clearance.

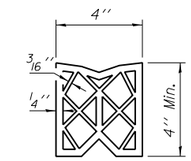

PREFORMED JOINT SEAL

*** Cost included with Concrete Superstructure.

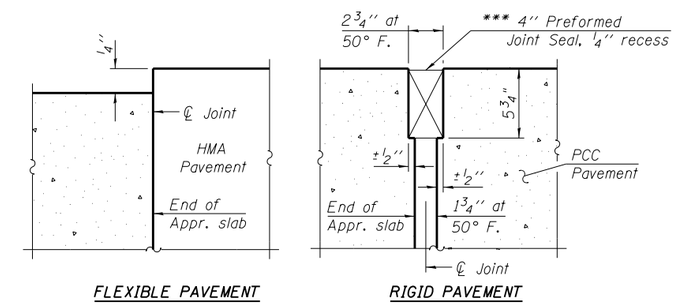

FLEXIBLE PAVEMENT RIGID PAVEMENT

DETAIL A

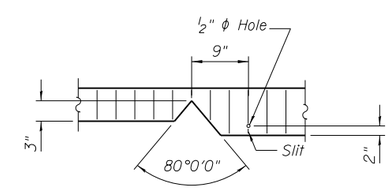

SEAL CUT-OUT AT CURB

NOTES:

See sheet S-25 of S-47 for Sections C-C & D-D.

AECOM	USER NAME = dunkerleyb	DESIGNED - EJO	REVISED	STATE OF ILLINOIS DEPARTMENT OF TRANSPORTATION	EAST APPROACH SLAB PLAN STRUCTURE NO. 016-1711	F.A.I. RTE.	SECTION	COUNTY	TOTAL SHEETS / SHEET NO.
		CHECKED - DD	REVISED			90/94/290	2013-036R	COOK	256 / 116
	PLOT SCALE = N.T.S.	DRAWN - BRD	REVISED					CONTRACT NO. 60W71	
	PLOT DATE = 12/17/2013	CHECKED - DD	REVISED		SHEET NO. S-24 OF S-47 SHEETS		ILLINOIS	FED. AID PROJECT -NUMBER-	

0161711-60W71-S24-ApprSlab

NOTES:

See sheet S-24 of S-47 for Detail A.
Approach slab and parapet concrete shall be paid for as Concrete Superstructure.
Approach footing concrete shall be paid for as Concrete Structures.
Reinforcement shall be paid for as Reinforcement Bars, Epoxy Coated.
For v300(E) bar details, see sheet S-35 of S-47.
The approach footing maximum applied service bearing pressure (Qmax) = 2.0 ksf.
Cost of excavation for approach footing included with Concrete Structures.
For bar splicer details, see sheet S-44 of S-47.
For Granular Backfill for Structures details, see sheet S-03 of S-47.

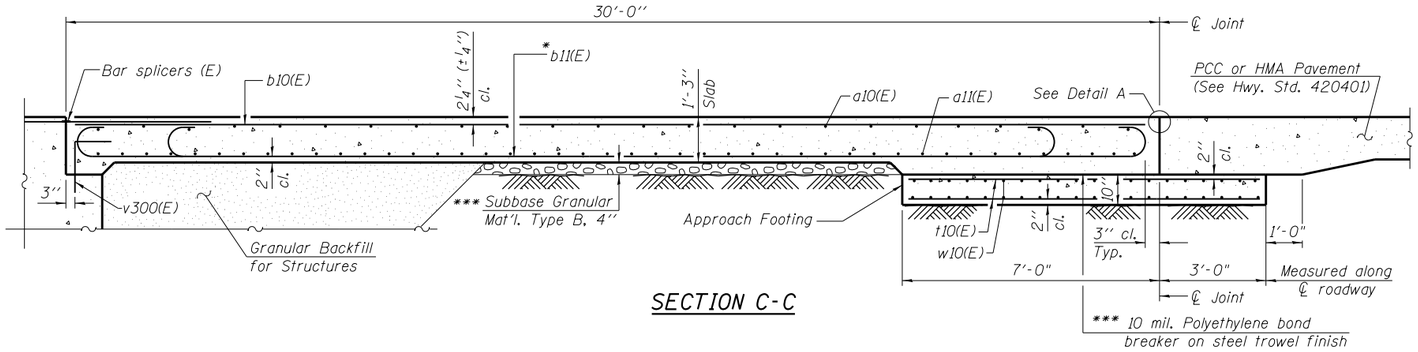

SECTION C-C

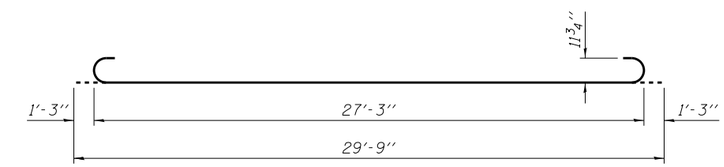

BAR b11(E)

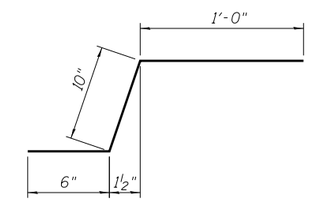

BAR c11(E)

* Tilt #9 b11(E) bars as required to maintain clearance.

*** Cost included with Concrete Superstructure.

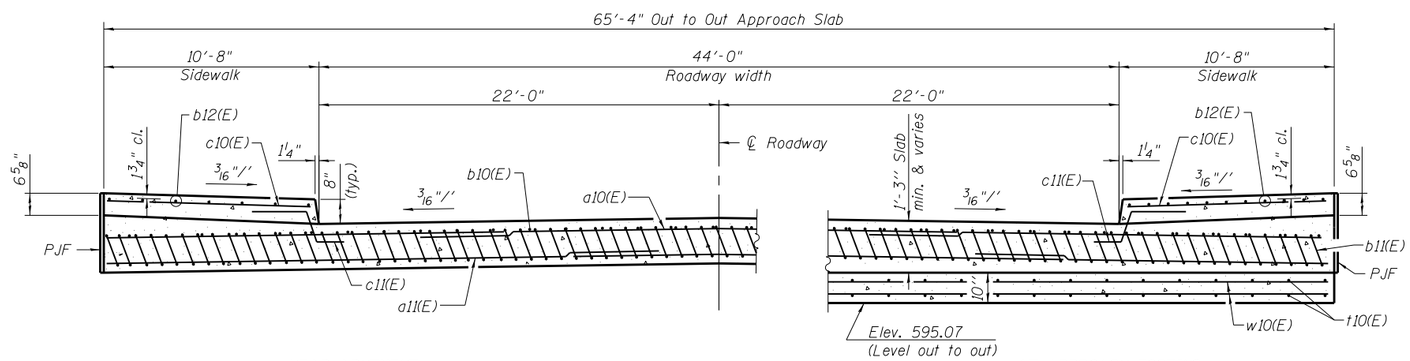

NEAR ABUTMENT

AT APPROACH FOOTING

SECTION D-D

(See Plan for dimensions not shown)

BILL OF MATERIAL

Bar	No.	Size	Length	Shape
a10(E)	50	#4	33'-10"	
a11(E)	92	#5	34'-2"	
b10(E)	53	#4	29'-8"	
b11(E)	157	#9	29'-9"	
b12(E)	22	#5	29'-8"	
c10(E)	62	#5	10'-4"	
c11(E)	62	#5	2'-4"	
t10(E)	132	#4	9'-8"	
w10(E)	80	#5	34'-2"	
Concrete Superstructure			Cu. Yd.	117
Concrete Structures			Cu. Yd.	21
Reinforcement Bars, Epoxy Coated			Pound	26,550
Protective Coat			Sq. Yd.	234
Bridge Deck Grooving			Sq. Yd.	140

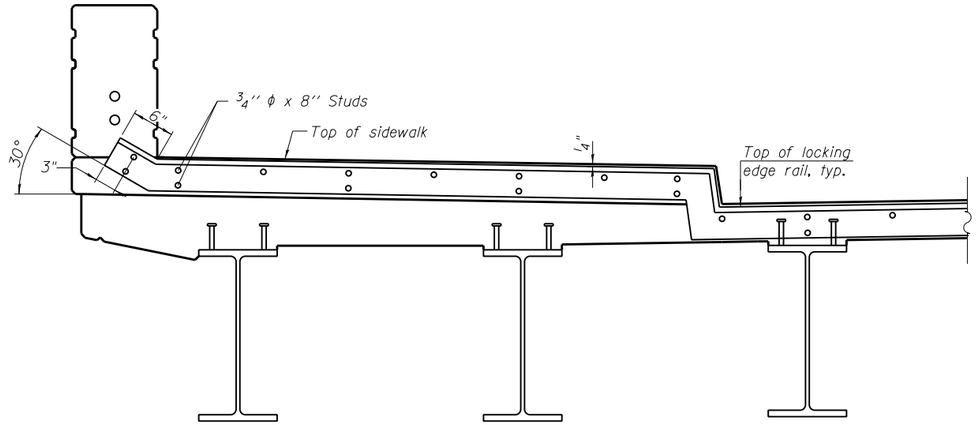

TYPICAL END TREATMENT AT SIDEWALK

Shorter plates with a single row of studs at 12" cts. may be necessary on sidewalks which are shallower than 9". See manufacturer's recommendation.

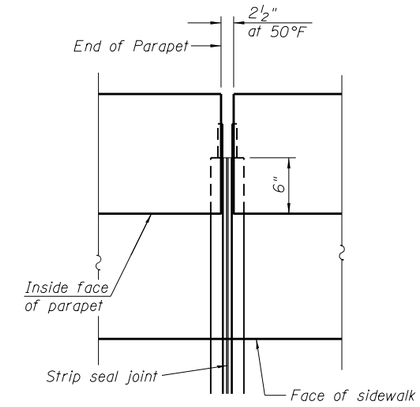

PLAN

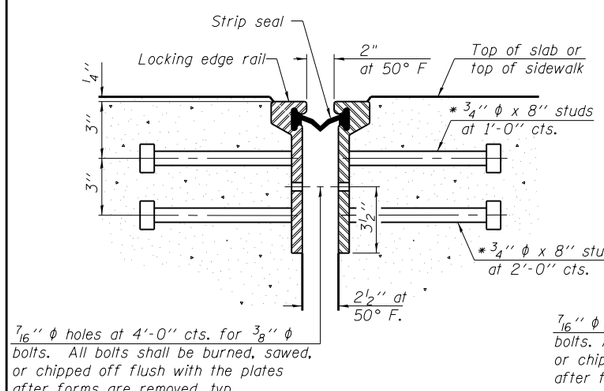

SECTION THRU ROLLED RAIL JOINT

* Granular or solid flux filled headed studs conforming to Article 1006.32 of the Std. Specs., automatically end welded.

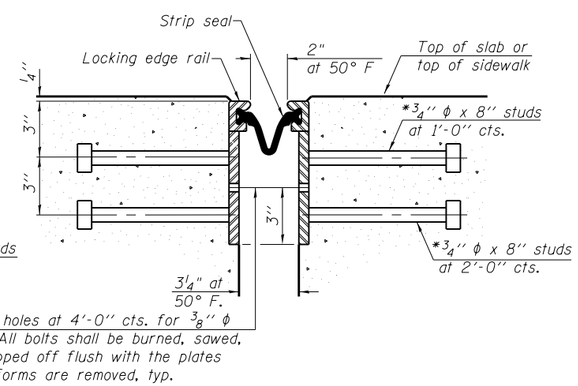

SECTION THRU WELDED RAIL JOINT

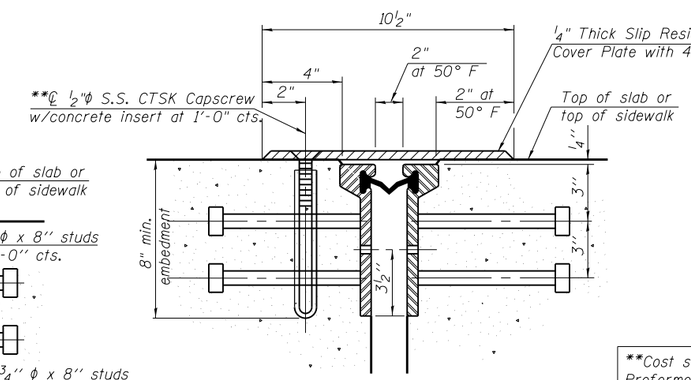

SECTION THRU ROLLED RAIL JOINT AT SIDEWALK

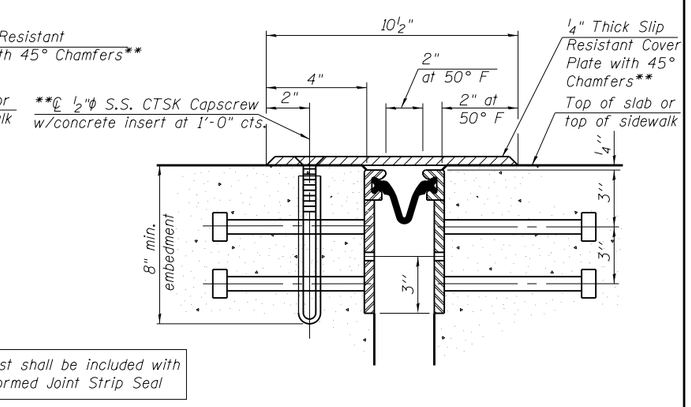

Note:
At East Abut. and West Abut. attach cover plate to the Ramp Pavement with 1/2"ϕ S.S. CTSK capscrew with concrete insert at 1'-0" cts.

SECTION THRU WELDED RAIL JOINT AT ADA RAMP

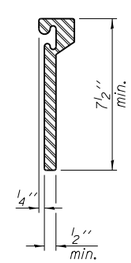

ROLLED EXTRUDED RAIL

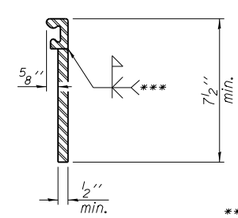

WELDED RAIL

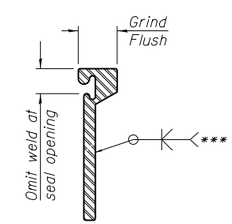

*** Back gouge not required if complete joint penetration is verified by mock-up.

LOCKING EDGE RAILS

LOCKING EDGE RAIL SPLICE

The inside of the locking edge rail groove shall be free of weld residue.
Rolled rail shown, welded rail similar.

NOTES:

1. The strip seal shall be made continuous and shall have a minimum thickness of 1/4". The configuration of the strip seal shall match the configuration of the Locking Edge Rails. Open or "webbed" strip seal gland configurations are not permitted. The gland shall be sized for a maximum rated movement of 4 inches.
2. The Locking Edge Rails depicted are conceptual only, except for the minimum dimensions shown. The actual configuration of the Locking Edge Rails and matching strip seal may vary from manufacturer to manufacturer. Flanged edge rails will not be allowed. Locking Edge Rails may be spliced at slope discontinuities.
3. The manufacturer's recommended installation methods shall be followed.
4. The joint opening and deck dimensions detailed on the superstructure are based on a rolled rail expansion joint. If the Contractor elects to use the welded rail expansion joint, the opening and deck dimensions shall be modified according to the dimensions detailed on this sheet. Required modifications shall be made at no additional cost to the State.
5. All steel components except expansion joint plates and attached bars shall be galvanized after fabrication according to Article 520.03 of the Standard Specifications.
6. Maximum space between rail segments shall be 3/16", sealed with a suitable sealant. Joints in rails within 10 ft. of curbs shall be welded.

BILL OF MATERIAL

Item	Unit	Total
Preformed Joint Strip Seal	Foot	135

AECOM

USER NAME = dunkerleyb	DESIGNED - DEV	REVISED	
	CHECKED - DD	REVISED	
PLOT SCALE = N.T.S.	DRAWN - DEV	REVISED	
PLOT DATE = 12/17/2013	CHECKED - DD	REVISED	

STATE OF ILLINOIS
DEPARTMENT OF TRANSPORTATION

EXPANSION JOINT DETAILS
STRUCTURE NO. 016-1711

SHEET NO. S-26 OF S-47 SHEETS

F.A.I. RTE.	SECTION	COUNTY	TOTAL SHEETS	SHEET NO.
90/94/290	2013-036R	COOK	256	118
		CONTRACT NO.	60W71	
	ILLINOIS	FED. AID PROJECT -NUMBER-		

016171I-60W71-S26-ExpJoint

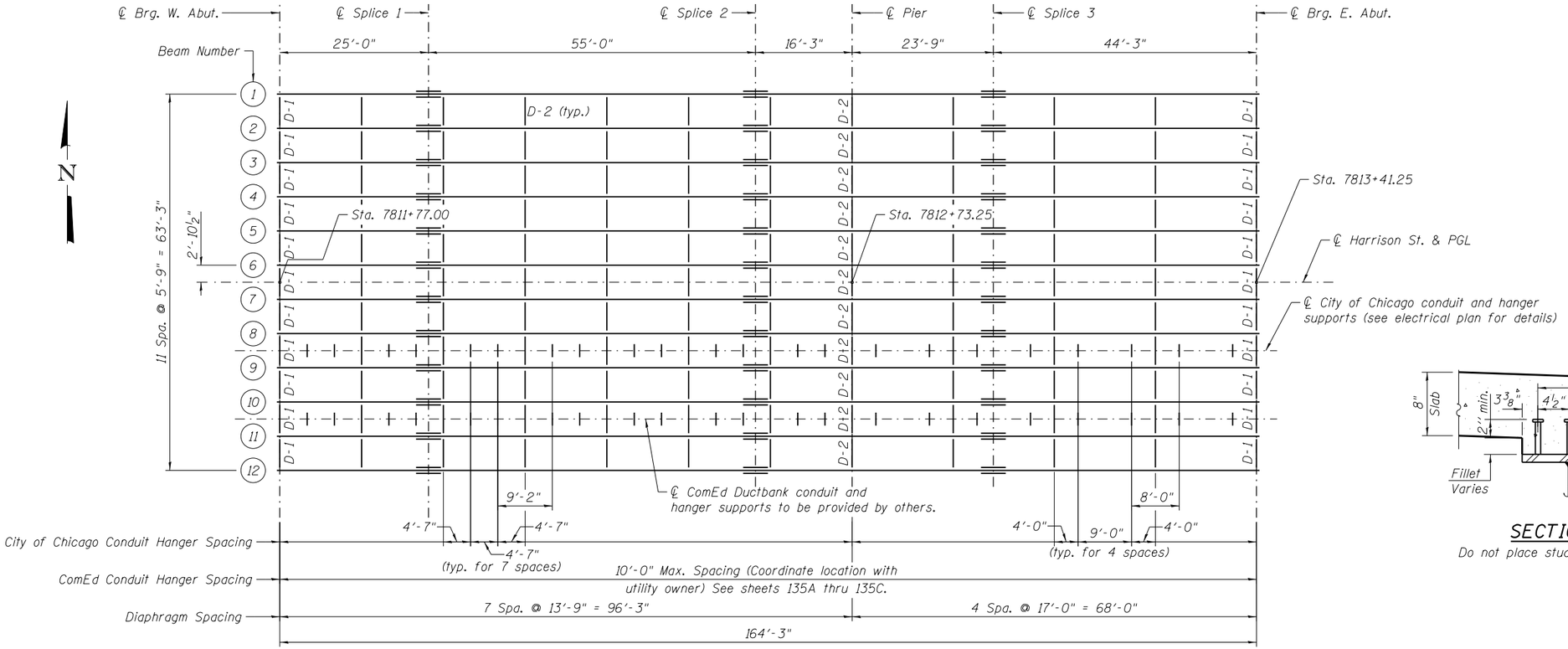

FRAMING PLAN

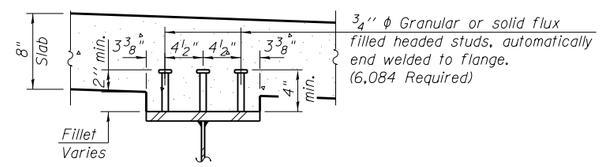

SECTION A-A

Do not place studs on splice plates.

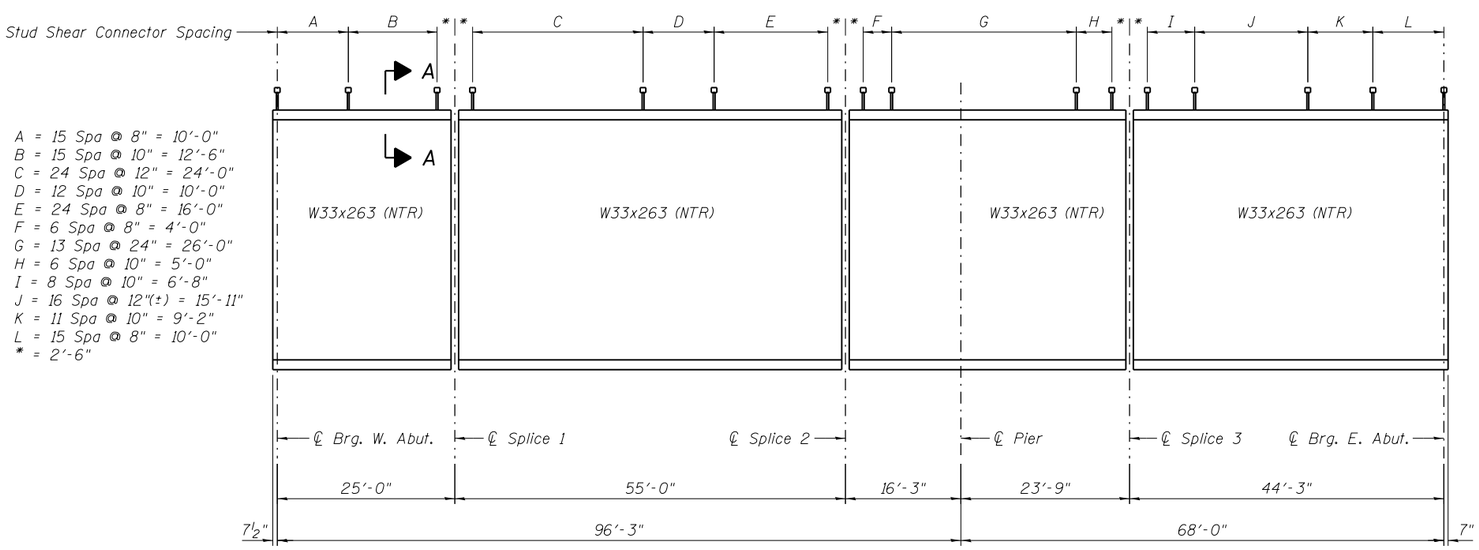

BEAM ELEVATION

NOTES:

1. All structural steel shall be AASHTO M270 Grade 50 - galvanized, U.N.O.
2. Load carrying components designated "NTR" shall conform to the Impact Testing Requirement, Zone 2.
3. No bearing stiffeners are required by design. Stiffeners may be added at the Contractor's expense as necessary to prevent distortion of the beams during galvanizing. The Contractor shall coordinate with the fabricator and the galvanizer to determine if additional stiffeners are necessary, and where these should be placed. Any proposed changes shall be submitted to the Engineer for approval prior to making any changes.
4. Temporary stiffener angles shall be bolted to each side of the splice ends of each beam segment to prevent distortion during galvanizing. Temporary stiffener angles shall bolt or fit tight against top & bottom flanges and include spacer tubes to minimize damage to galvanizing during removal. Cost included with Furnishing and Erecting Structural Steel.
5. E.S. = Each Side

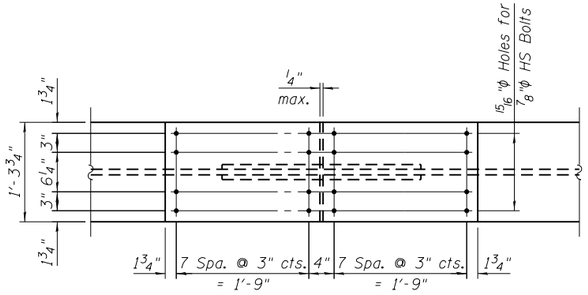

TOP FLANGE PLAN

(Bottom Flange Similar)

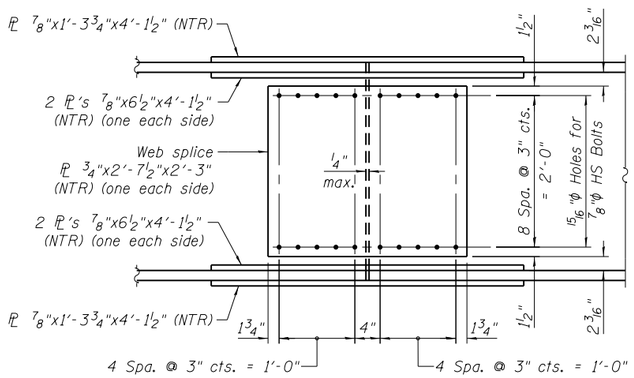

ELEVATION

SPLICE DETAIL

(36 Required)

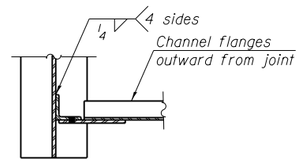

SECTION A-A

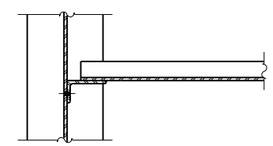

SECTION B-B

TOP OF BEAM ELEVATIONS**						
Girder	℄ Brg. W. Abut.	℄ Splice 1	℄ Splice 2	℄ Pier	℄ Splice 3	℄ Brg. E. Abut.
1	597.12	597.69	598.76	598.90	598.66	597.70
2	597.21	597.78	598.85	598.99	598.75	597.79
3	597.30	597.87	598.94	599.08	598.84	597.88
4	597.39	597.96	599.03	599.17	598.93	597.97
5	597.48	598.05	599.12	599.26	599.02	598.06
6	597.57	598.14	599.21	599.35	599.11	598.15
7	597.57	598.14	599.21	599.35	599.11	598.15
8	597.48	598.05	599.12	599.26	599.02	598.06
9	597.39	597.96	599.03	599.17	598.93	597.97
10	597.30	597.87	598.94	599.08	598.84	597.88
11	597.21	597.78	598.85	598.99	598.75	597.79
12	597.12	597.69	598.76	598.90	598.66	597.70

**For fabrication use only.

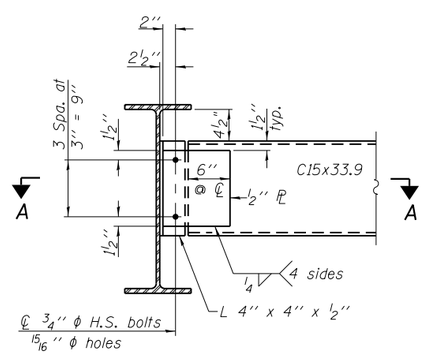

END DIAPHRAGM - D-1

(22 Required)

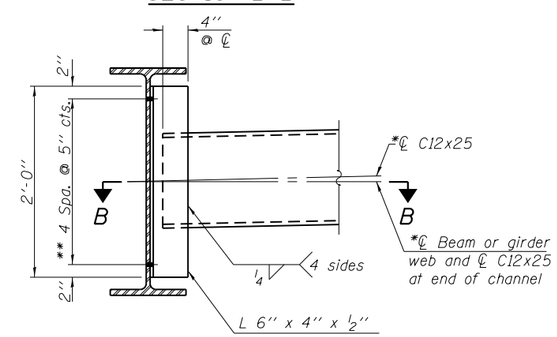

INTERIOR DIAPHRAGM - D-2

(110 Required)

Note:
*Alternate channels are permitted to facilitate material acquisition. Calculated weight of structural steel is based on the lighter section.
The alternate, if utilized, shall be provided at no additional cost to the Department.
**3/4" φ HS bolts, 15/16" φ holes

INTERIOR BEAM MOMENT TABLE				
		0.4 Sp. 1	Pier	0.6 Sp. 2
I_s	(in^4)	15,900	15,900	15,900
$I_c(n)$	(in^4)	33,166	-	33,166
$I_c(3n)$	(in^4)	24,097	-	24,097
$I_c(cr)$	(in^4)	-	18,338	-
S_s	(in^3)	919	919	919
$S_c(n)$	(in^3)	1,219	-	1,219
$S_c(3n)$	(in^3)	1,095	-	1,095
$S_c(cr)$	(in^3)	-	1,157	-
DC1	(k/')	1.08	1.08	1.08
M_{DC1}	('k)	806	979	206
*** DC2	(k/')	0.62	0.62	0.62
M_{DC2}	('k)	465	573	117
DW	(k/')	0.27	0.27	0.27
M_{DW}	('k)	203	250	51
M_{LL+IM}	('k)	1,233	1,176	846
M_u (Strength I)	('k)	4,051	4,373	1,961
$\phi_f M_n$	('k)	5,444	-	5,444
f_s DC1	(ksi)	10.52	12.78	2.69
f_s DC2	(ksi)	5.10	5.94	1.28
f_s DW	(ksi)	2.22	2.59	0.56
f_s (LL+IM)	(ksi)	12.14	12.20	8.33
f_s (Service II)	(ksi)	33.62	37.18	15.36
$0.95R_hF_{yf}$	(ksi)	47.50	47.50	47.50
f_s (Total)(Strength I)	(ksi)	-	48.64	-
$\phi_f F_n$	(ksi)	-	50.00	-
V_f	(k)	46.20	51.40	50.00

INTERIOR BEAM REACTION TABLE				
		W. Abut.	Pier	E. Abut.
R_{DC1}	(k)	42	113	23
R_{DC2}	(k)	24	66	13
R_{DW}	(k)	11	29	6
R_{LL+IM}	(k)	83	149	73
R_{Total}	(k)	160	357	115

I_s, S_s: Non-composite moment of inertia and section modulus of the steel section used for computing f_s (Total-Strength I, and Service II) due to non-composite dead loads ($in.^4$ and $in.^3$).

$I_c(n)$, $S_c(n)$: Composite moment of inertia and section modulus of the steel and deck based upon the modular ratio, "n", used for computing f_s (Total-Strength I, and Service II) in uncracked sections due to short-term composite live loads ($in.^4$ and $in.^3$).

$I_c(3n)$, $S_c(3n)$: Composite moment of inertia and section modulus of the steel and deck based upon 3 times the modular ratio, "3n", used for computing f_s (Total-Strength I, and Service II) in uncracked sections, due to long-term composite (superimposed) dead loads ($in.^4$ and $in.^3$).

$I_c(cr)$, $S_c(cr)$: Composite moment of inertia and section modulus of the steel and longitudinal deck reinforcement, used for computing f_s (Total-Strength I and Service II) in cracked sections, due to both short-term composite live loads and long-term composite (superimposed) dead loads ($in.^4$ and $in.^3$).

DC1: Un-factored non-composite dead load (kips/ft.).

M_{DC1}: Un-factored moment due to non-composite dead load (kip-ft.).

DC2: Un-factored long-term composite (superimposed excluding future wearing surface) dead load (kips/ft.).

M_{DC2}: Un-factored moment due to long-term composite (superimposed excluding future wearing surface) dead load (kip-ft.).

DW: Un-factored long-term composite (superimposed future wearing surface only) dead load (kips/ft.).

M_{DW}: Un-factored moment due to long-term composite (superimposed future wearing surface only) dead load (kip-ft.).

M_{LL+IM}: Un-factored live load moment plus dynamic load allowance (impact) (kip-ft.).

M_u (Strength I): Factored design moment (kip-ft.).
$1.25\ (M_{DC1} + M_{DC2}) + 1.5\ M_{DW} + 1.75\ M_{LL+IM}$

$\phi_f M_n$: Compact composite positive moment capacity computed according to Article 6.10.7.1 or non-slender negative moment capacity according to Article A6.1.1 or A6.1.2 (kip-ft).

f_s DC1: Un-factored stress at edge of flange for controlling steel flange due to vertical non-composite dead loads as calculated below (ksi).
M_{DC1} / S_s

f_s DC2: Un-factored stress at edge of flange for controlling steel flange due to vertical composite dead loads as calculated below (ksi).
$M_{DC2} / S_c(3n)$ or $M_{DC2} / S_c(cr)$ as applicable.

f_s DW: Un-factored stress at edge of flange for controlling steel flange due to vertical composite future wearing surface loads as calculated below (ksi).
$M_{DW} / S_c(3n)$ or $M_{DW} / S_c(cr)$ as applicable.

f_s (LL+IM): Un-factored stress at edge of flange for controlling steel flange due to vertical composite live load plus impact loads as calculated below (ksi).
$M_{LL+IM} / S_c(n)$ or $M_{LL+IM} / S_c(cr)$ as applicable.

f_s (Service II): Sum of stresses as computed below (ksi).
$f_{sDC1} + f_{sDC2} + f_{sDW} + 1.3\ f_s(LL+IM)$

$0.95R_hF_{yf}$: Composite stress capacity for Service II loading according to Article 6.10.4.2 (ksi).

f_s (Total)(Strength I): Sum of stresses as computed below on non-compact section (ksi).
$1.25\ (f_{sDC1} + f_{sDC2}) + 1.5\ f_{sDW} + 1.75\ f_s(LL+IM)$

$\phi_f F_n$: Non-Compact composite positive or negative stress capacity for Strength I loading according to Article 6.10.7 or 6.10.8 (ksi).

V_f: Maximum factored shear range in span computed according to Article 6.10.10.

NOTES:

1. Structural steel for flange and splice plates shall be AASHTO M270 Grade 50 - galvanized. Structural steel for diaphragms, connection plates and angles may be AASHTO M270 Grade 36 - galvanized.
2. Load carrying components designated "NTR" shall conform to the Impact Testing Requirement, Zone 2.
3. All diaphragms shall be installed as steel is erected and secured with erection pins and bolts except as otherwise noted. Individual diaphragms at supports may be temporarily disconnected to install bearing anchor rods.
4. Two hardened washers required for each set of oversized holes.
5. E.S. = Each Side

*** For Beams 10 and 11, the load due to ComEd ductbank is 43 pounds per linear foot per beam.
For Beams 8 and 9, the load due to City of Chicago ductbank is 53 pounds per linear foot per beam.

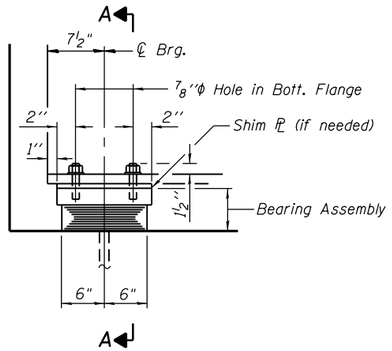

ELEVATION AT W. ABUT.

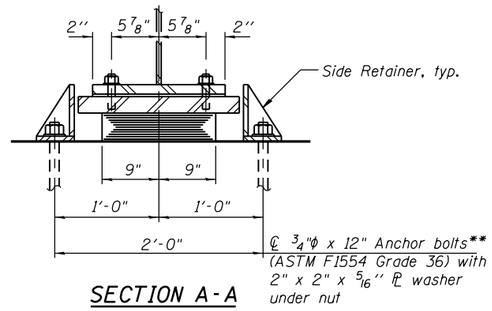

SECTION A-A

TYPE I ELASTOMERIC EXP. BRG.
WEST ABUTMENT

** Length shown is minimum required embedment length.

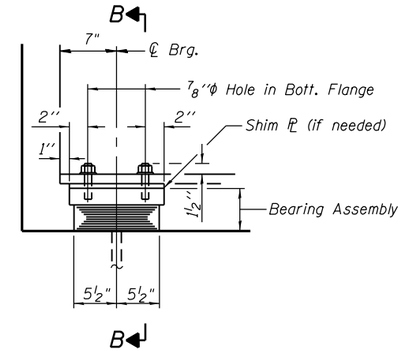

ELEVATION AT E. ABUT.

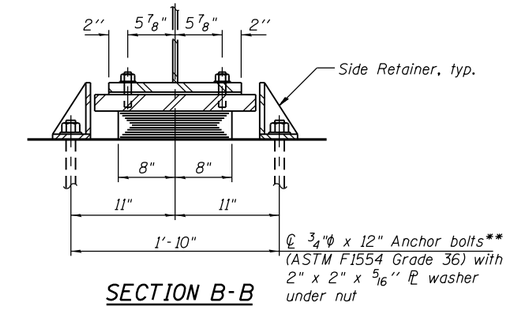

SECTION B-B

TYPE I ELASTOMERIC EXP. BRG.
EAST ABUTMENT

** Length shown is minimum required embedment length.

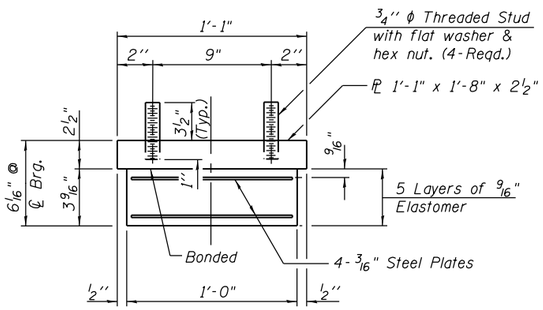

BEARING ASSEMBLY

Note:
Shim plates shall not be placed under Bearing Assembly.

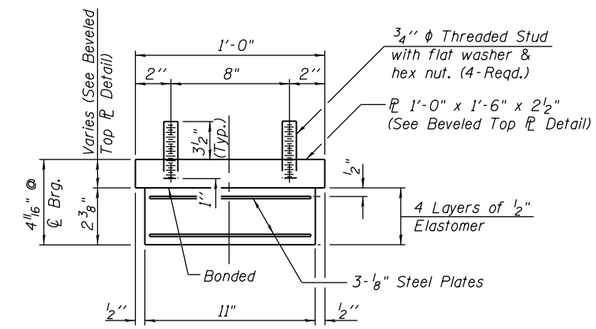

BEARING ASSEMBLY

Note:
Shim plates shall not be placed under Bearing Assembly.

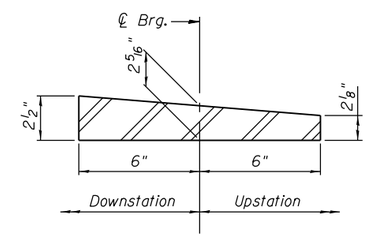

BEVELED TOP PL DETAIL
EAST ABUTMENT

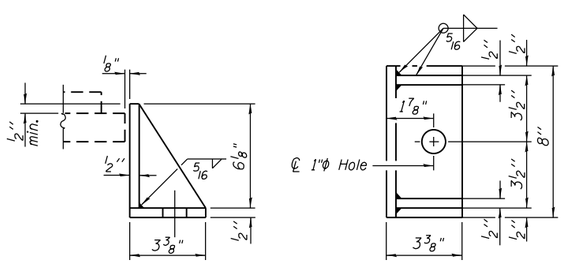

SIDE RETAINER

Equivalent rolled angle with stiffeners will be allowed in lieu of welded plates.

NOTES:

1. Anchor bolts shall be ASTM F1554 all-thread (or an Engineer-approved alternate material) of the grade(s) and diameter(s) specified. The corresponding specified grade of AASHTO M314 anchor bolts may be used in lieu of ASTM F1554.
2. Anchor bolts for side retainers may be cast in place or installed in holes drilled before or after members are in place.
3. Drilled and set anchor bolts shall be installed according to Article 521.06 of the Standard Specifications.
4. Side retainers and other steel members required for the elastomeric bearing assembly shall be included in the cost of Elastomeric Bearing Assembly, Type I.
5. Two 1/8 in. adjusting shims shall be provided for each bearing in addition to all other plates or shims and placed as shown on bearing details.
6. All (embedded and separate) bearing plates, side retainers, anchor bolts, nuts, washers and pintles shall be galvanized according to AASHTO M111 or M232 as applicable.

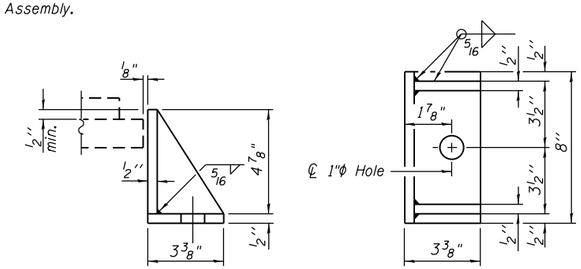

SIDE RETAINER

Equivalent rolled angle with stiffeners will be allowed in lieu of welded plates.

BILL OF MATERIAL

Item	Unit	Total
Elastomeric Bearing Assembly Type I	Each	24
Anchor Bolts, 3/4"	Each	48

0161711-60W71-S29-Bearing

AECOM

USER NAME = dabezicd	DESIGNED - EJO	REVISED	
	CHECKED - DD	REVISED	
PLOT SCALE = N.T.S.	DRAWN - BRD	REVISED	
PLOT DATE = 2/19/2014	CHECKED - DD	REVISED	

STATE OF ILLINOIS
DEPARTMENT OF TRANSPORTATION

ELASTOMERIC BEARING DETAILS
STRUCTURE NO. 016-1711

SHEET NO. S-29 OF S-47 SHEETS

F.A.I. RTE.	SECTION	COUNTY	TOTAL SHEETS	SHEET NO.
90/94/290	2013-036R	COOK	256	121
		CONTRACT NO. 60W71		
	ILLINOIS FED. AID PROJECT -NUMBER-			

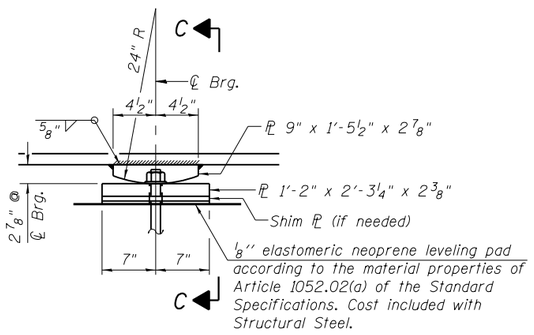

ELEVATION AT PIER

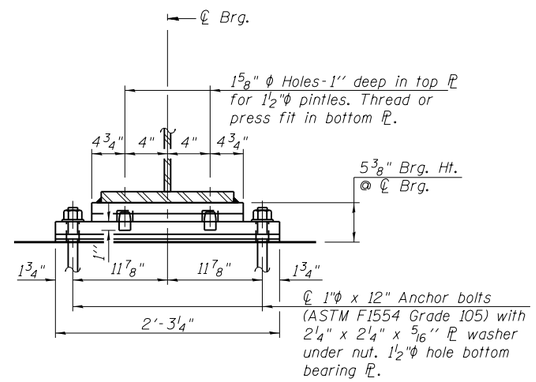

SECTION C-C

FIXED BEARING - PIER

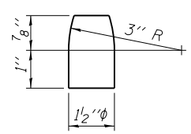

PINTLE

NOTES:

1. Anchor bolts at fixed bearings may be either cast in place or installed in holes drilled after the supported member is in place.
2. Fixed Bearing Assembly included in "Furnishing and Erecting Structural Steel."
3. Anchor bolts shall be ASTM F1554 all-thread (or an Engineer-approved alternate material) of the grade(s) and diameter(s) specified. The corresponding specified grade of AASHTO M314 anchor bolts may be used in lieu of ASTM F1554.
4. Drilled and set anchor bolts shall be installed according to Article 521.06 of the Standard Specifications.
5. Two 1/8 in. adjusting shims shall be provided for each bearing in addition to all other plates or shims and placed as shown on bearing details.
6. All (embedded and separate) bearing plates, side retainers, anchor bolts, nuts, washers and pintles shall be galvanized according to AASHTO M111 or M232 as applicable.

BILL OF MATERIAL

Item	Unit	Total
Anchor Bolts, 1"	Each	24

0161711-60W71-S30-Bearing

AECOM

USER NAME = dunkerleyb	DESIGNED - EJO	REVISED	
	CHECKED - DD	REVISED	
PLOT SCALE = N.T.S.	DRAWN - BRD	REVISED	
PLOT DATE = 12/17/2013	CHECKED - DD	REVISED	

STATE OF ILLINOIS
DEPARTMENT OF TRANSPORTATION

FIXED BEARING DETAILS
STRUCTURE NO. 016-1711

SHEET NO. S-30 OF S-47 SHEETS

F.A.I. RTE.	SECTION	COUNTY	TOTAL SHEETS	SHEET NO.
90/94/290	2013-036R	COOK	256	122

CONTRACT NO. 60W71

ILLINOIS FED. AID PROJECT -NUMBER-

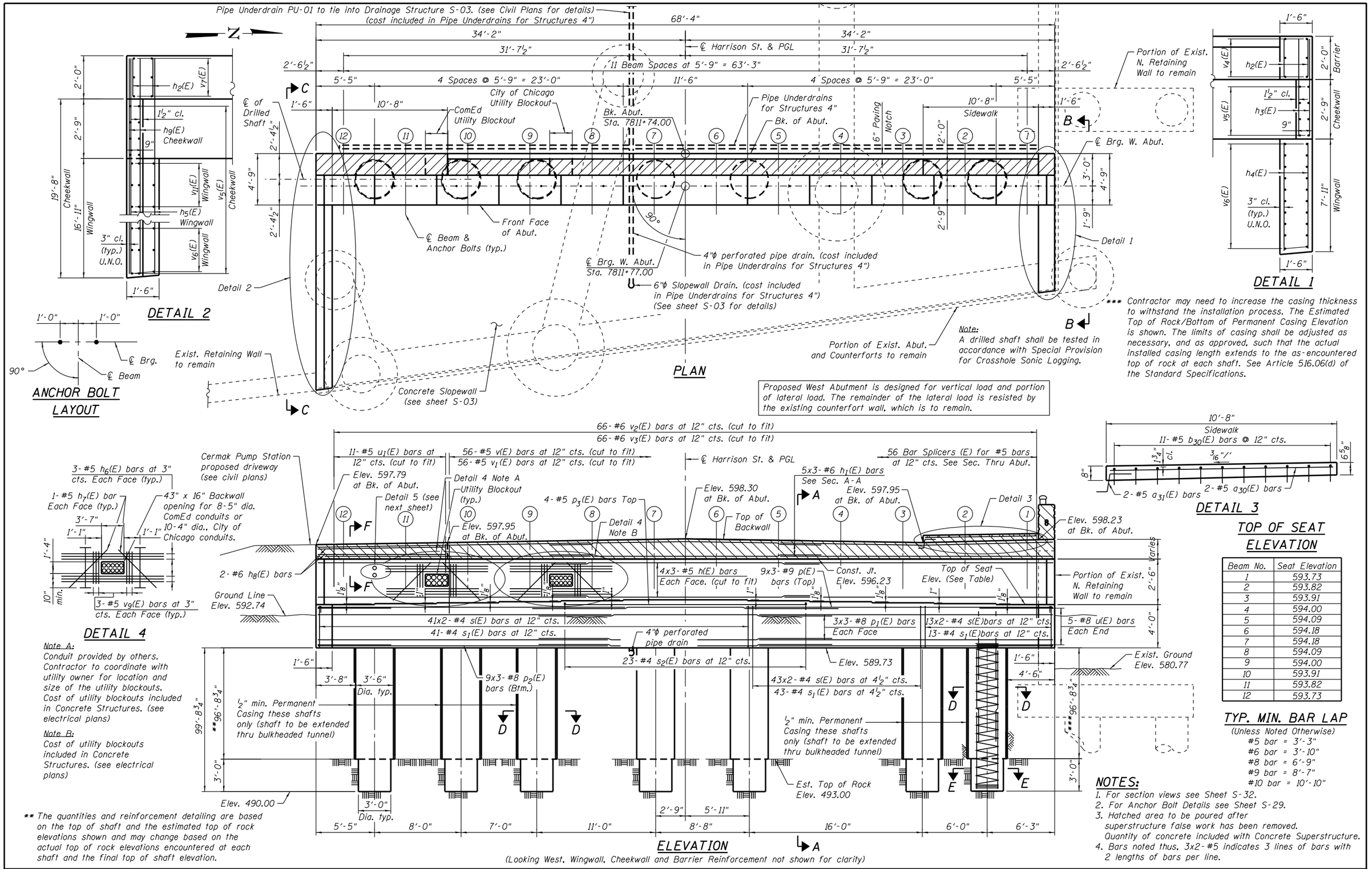

Note:
A drilled shaft shall be tested in accordance with Special Provision for Crosshole Sonic Logging.

*** Contractor may need to increase the casing thickness to withstand the installation process. The Estimated Top of Rock/Bottom of Permanent Casing Elevation is shown. The limits of casing shall be adjusted as necessary, and as approved, such that the actual installed casing length extends to the as-encountered top of rock at each shaft. See Article 516.06(d) of the Standard Specifications.

TOP OF SEAT ELEVATION

Beam No.	Seat Elevation
1	593.73
2	593.82
3	593.91
4	594.00
5	594.09
6	594.18
7	594.18
8	594.09
9	594.00
10	593.91
11	593.82
12	593.73

TYP. MIN. BAR LAP

(Unless Noted Otherwise)
#5 bar = 3'-3"
#6 bar = 3'-10"
#8 bar = 6'-9"
#9 bar = 8'-7"
#10 bar = 10'-10"

Note A:
Conduit provided by others. Contractor to coordinate with utility owner for location and size of the utility blockouts. Cost of utility blockouts included in Concrete Structures. (see electrical plans)

Note B:
Cost of utility blockouts included in Concrete Structures. (see electrical plans)

** The quantities and reinforcement detailing are based on the top of shaft and the estimated top of rock elevations shown and may change based on the actual top of rock elevations encountered at each shaft and the final top of shaft elevation.

NOTES:

1. For section views see Sheet S-32.
2. For Anchor Bolt Details see Sheet S-29.
3. Hatched area to be poured after superstructure false work has been removed. Quantity of concrete included with Concrete Superstructure.
4. Bars noted thus. 3x2-#5 indicates 3 lines of bars with 2 lengths of bars per line.

0161711-60W71-S31-Abutment

AECOM

USER NAME = dabezicd	DESIGNED - DD	REVISED	
	CHECKED - DEV	REVISED	
PLOT SCALE = N.T.S.	DRAWN - BRD	REVISED	
PLOT DATE = 2/19/2014	CHECKED - DEV	REVISED	

STATE OF ILLINOIS
DEPARTMENT OF TRANSPORTATION

WEST ABUTMENT PLAN AND ELEVATION
STRUCTURE NO. 016-1711
SHEET NO. S-31 OF S-47 SHEETS

F.A.I. RTE.	SECTION	COUNTY	TOTAL SHEETS	SHEET NO.
90/94/290	2013-036R	COOK	256	123
		CONTRACT NO. 60W71		
		ILLINOIS FED. AID PROJECT -NUMBER-		

NOTES:

1. Hatched area to be poured after superstructure false work has been removed. Quantity of concrete included with Concrete Superstructure.
2. Concrete Sealer shall be applied to abutment backwall, bearing seats and exposed faces of abutment cap, cheekwalls and wingwalls.
3. When splicing spiral reinforcement is necessary, the spiral shall be provided with $1\frac{1}{2}$ extra turns at the ends to be spliced. These additional turns shall either be welded together according to AWS D1.4 or shall both terminate with a 135° standard hook.
4. E.F. = Each Face
5. Drill and grout of v6(E) bars in accordance with Article 584 of the Standard Specifications. Cost included with Reinforcement Bars, Epoxy Coated pay item.
6. For Pipe Underdrain detail see sheet S-03.
7. Bars noted thus, 3x2-#5 indicates 3 lines of bars with 2 lengths of bars per line.

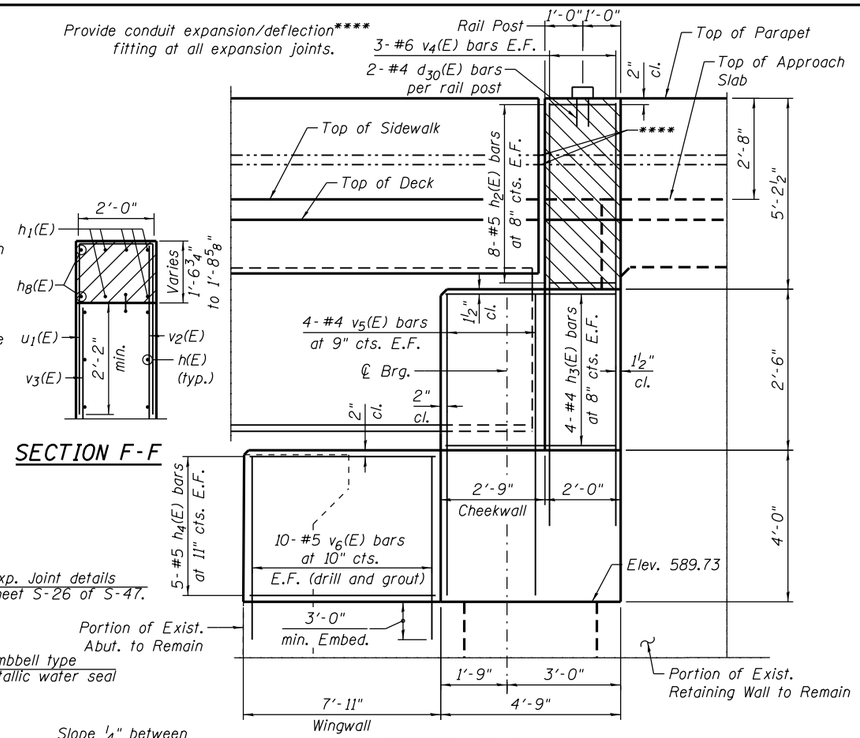

SECTION B-B

SECTION F-F

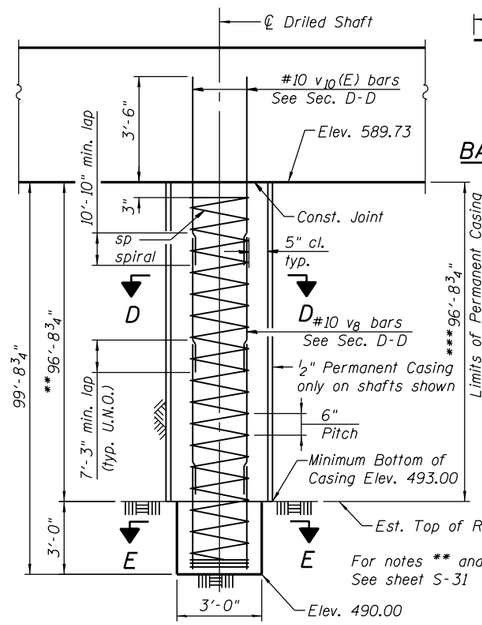

ABUTMENT SHAFT ELEVATION

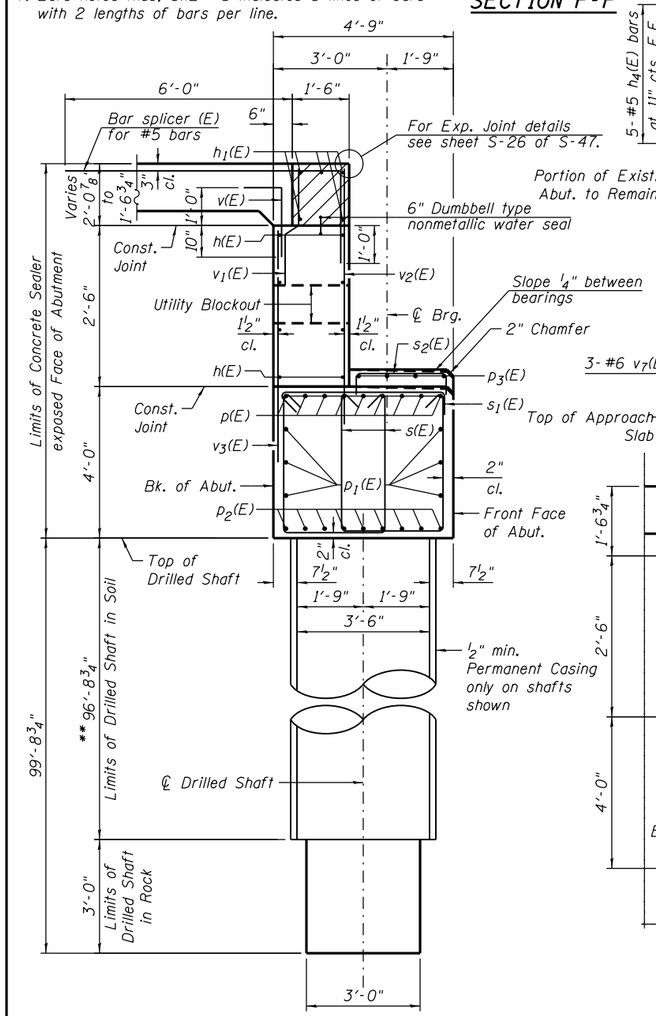

SECTION A-A

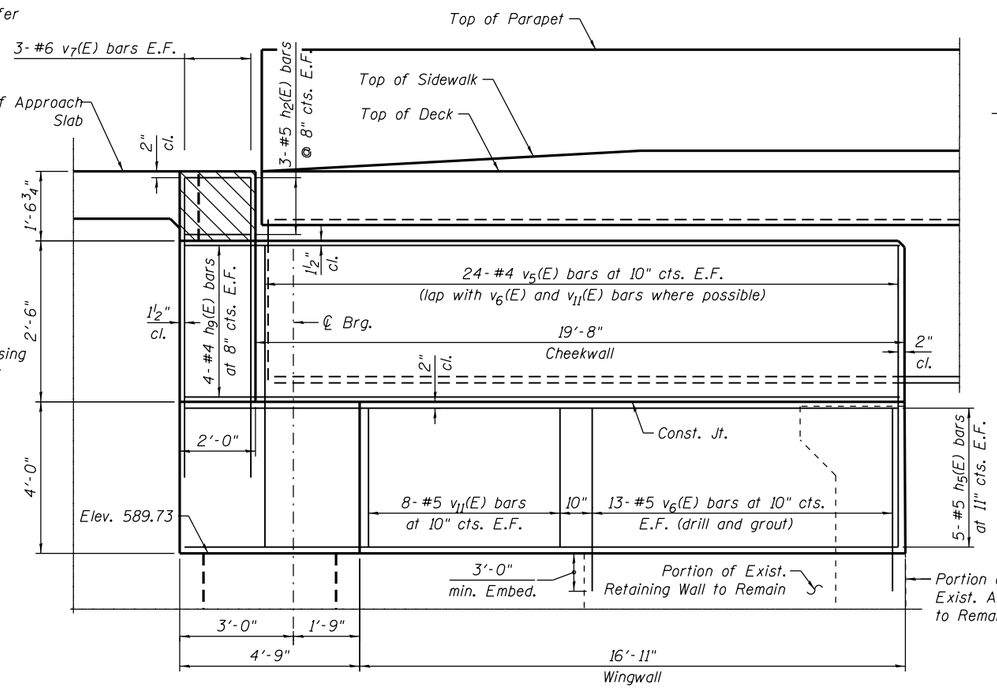

SECTION C-C

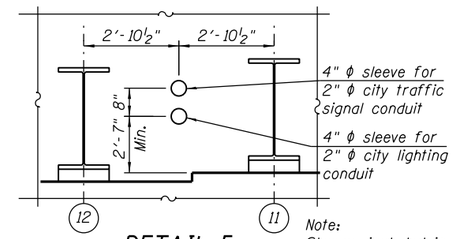

DETAIL 5

Note: Sleeves included in Concrete Structures pay item.

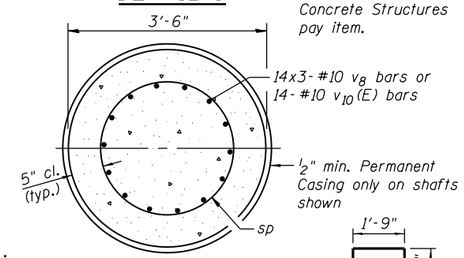

SECTION D-D

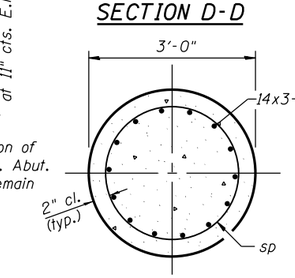

SECTION E-E

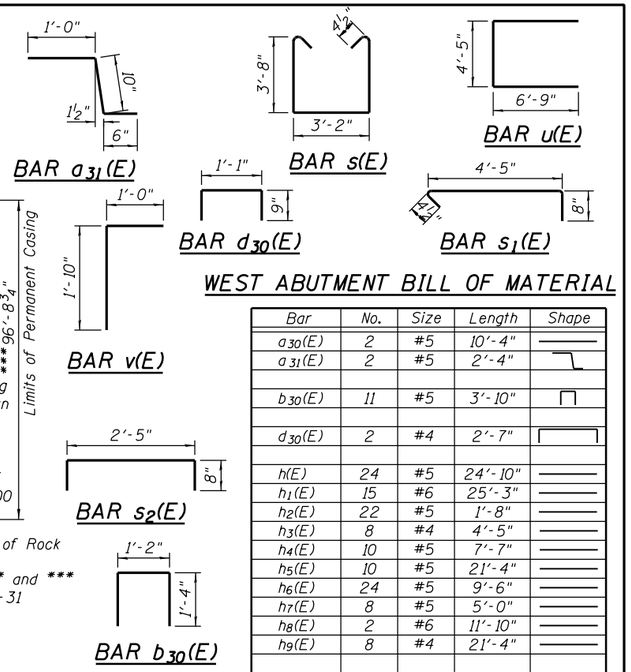

WEST ABUTMENT BILL OF MATERIAL

Bar	No.	Size	Length	Shape
a30(E)	2	#5	10'-4"	
a31(E)	2	#5	2'-4"	
b30(E)	11	#5	3'-10"	
d30(E)	2	#4	2'-7"	
h(E)	24	#5	24'-10"	
h1(E)	15	#6	25'-3"	
h2(E)	22	#5	1'-8"	
h3(E)	8	#4	4'-5"	
h4(E)	10	#5	7'-7"	
h5(E)	10	#5	21'-4"	
h6(E)	24	#5	9'-6"	
h7(E)	8	#5	5'-0"	
h8(E)	2	#6	11'-10"	
h9(E)	8	#4	21'-4"	
p(E)	27	#9	28'-5"	
p1(E)	18	#8	27'-2"	
p2(E)	27	#8	27'-2"	
p3(E)	4	#5	22'-8"	
s(E)	194	#4	11'-3"	
s1(E)	97	#4	5'-5½"	
s2(E)	23	#4	3'-9"	
* sp	7	#6	99'-6"	
u(E)	10	#8	17'-11"	
u1(E)	11	#5	9'-7"	
v(E)	56	#5	2'-10"	
v1(E)	56	#5	3'-8"	
v2(E)	66	#6	7'-1"	
v3(E)	66	#6	5'-1"	
v4(E)	6	#6	10'-1"	
v5(E)	56	#4	5'-1"	
v6(E)	46	#5	6'-10"	
v7(E)	6	#6	6'-5"	
v8	294	#10	38'-0"	
v9(E)	24	#5	2'-2"	
v10(E)	98	#10	14'-7"	
v11(E)	16	#5	3'-8"	
Granular Backfill for Structures			Cu. Yd.	99
Structure Excavation			Cu. Yd.	449
Concrete Structures			Cu. Yd.	70
Concrete Superstructure			Cu. Yd.	9
Reinforcement Bars			Pound	65,570
Reinforcement Bars, Epoxy Coated			Pound	19,000
Permanent Casing			Foot	484
Drilled Shaft In Soil			Cu. Yd.	242
Drilled Shaft In Rock			Cu. Yd.	6
Concrete Sealer			Sq. Ft.	739
Geocomposite Wall Drain			Sq. Yd.	48
Pipe Underdrain for Structures 4"			Foot	100
Crosshole Sonic Logging			Each	1

For details of Bar Splicers, see sheet S-44.
* Length is height of spiral.

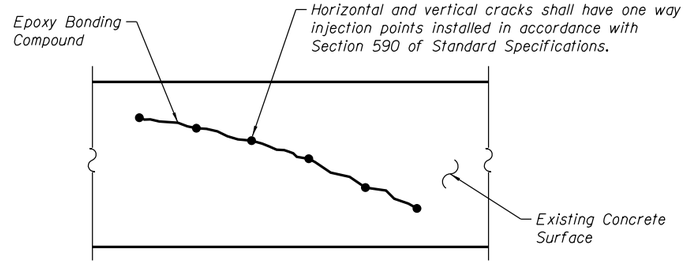

EPOXY CRACK INJECTION

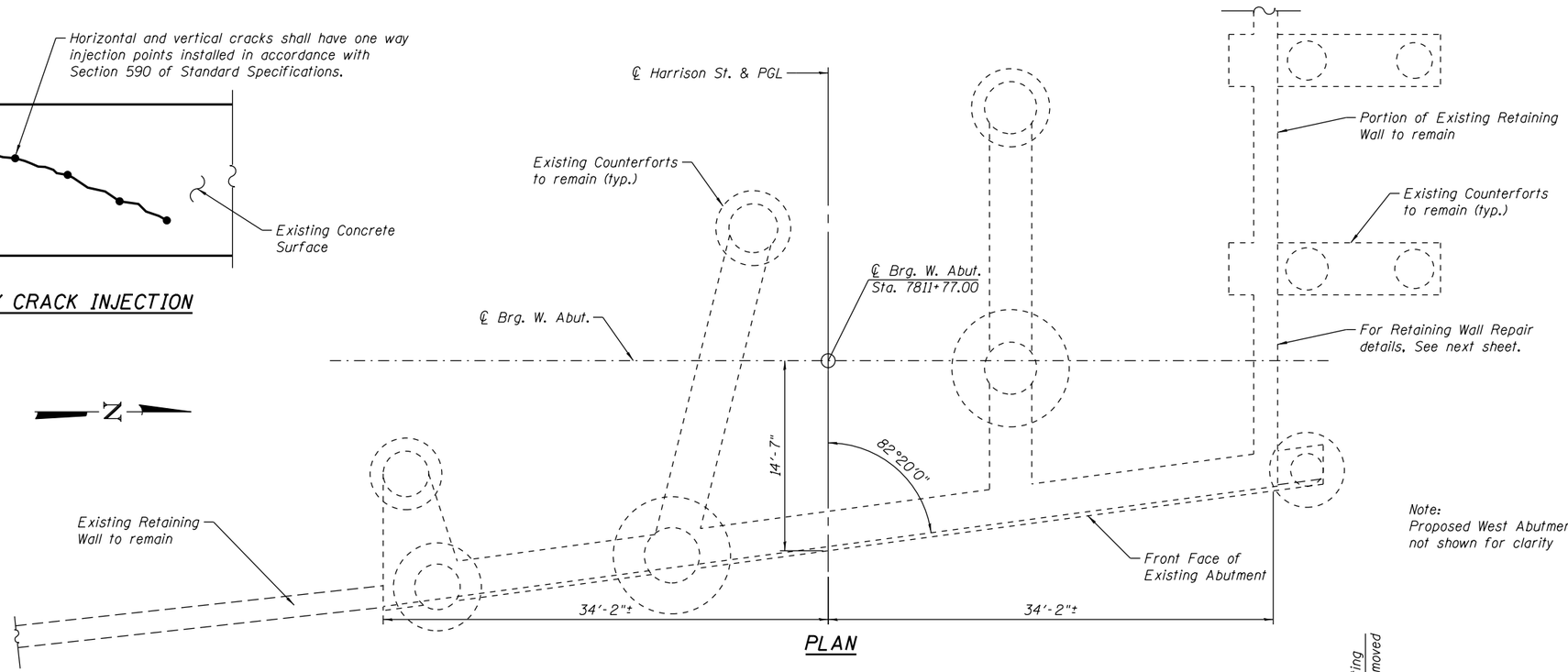

PLAN

Note:
Proposed West Abutment not shown for clarity

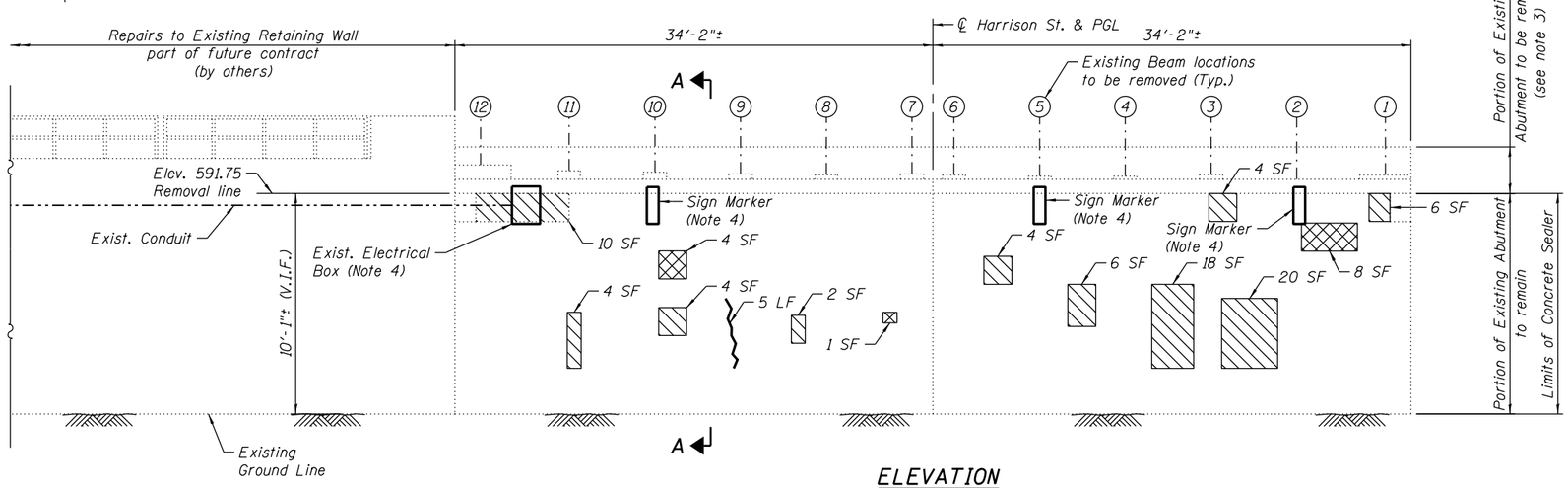

ELEVATION
(Looking West)

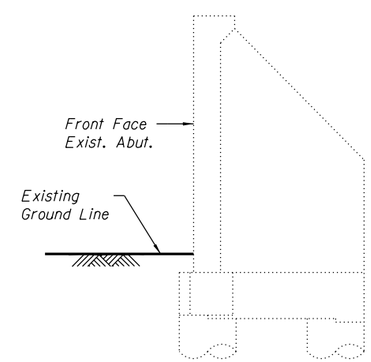

SECTION A-A

LEGEND

- Epoxy Crack Injection
- Area of Structural Repair of Concrete (depth equal to or less than 5")
- Area of Structural Repair of Concrete (depth greater than 5")

NOTES:

1. Deck and superstructure not shown for clarity.
2. Concrete sealer shall be applied to front face of existing abutment.
3. For Removal Details see sheets S-04 thru S-06.
4. Sign Markers, Conduit, and Electrical Boxes attached to face of abutment are to be removed prior to repair work.

BILL OF MATERIAL

Item	Unit	Quantity
Concrete Sealer	Sq. Ft.	690
Epoxy Crack Injection	Foot	5
Structural Repair of Concrete (depth equal to or less than 5")	Sq. Ft.	78
Structural Repair of Concrete (depth greater than 5")	Sq. Ft.	13

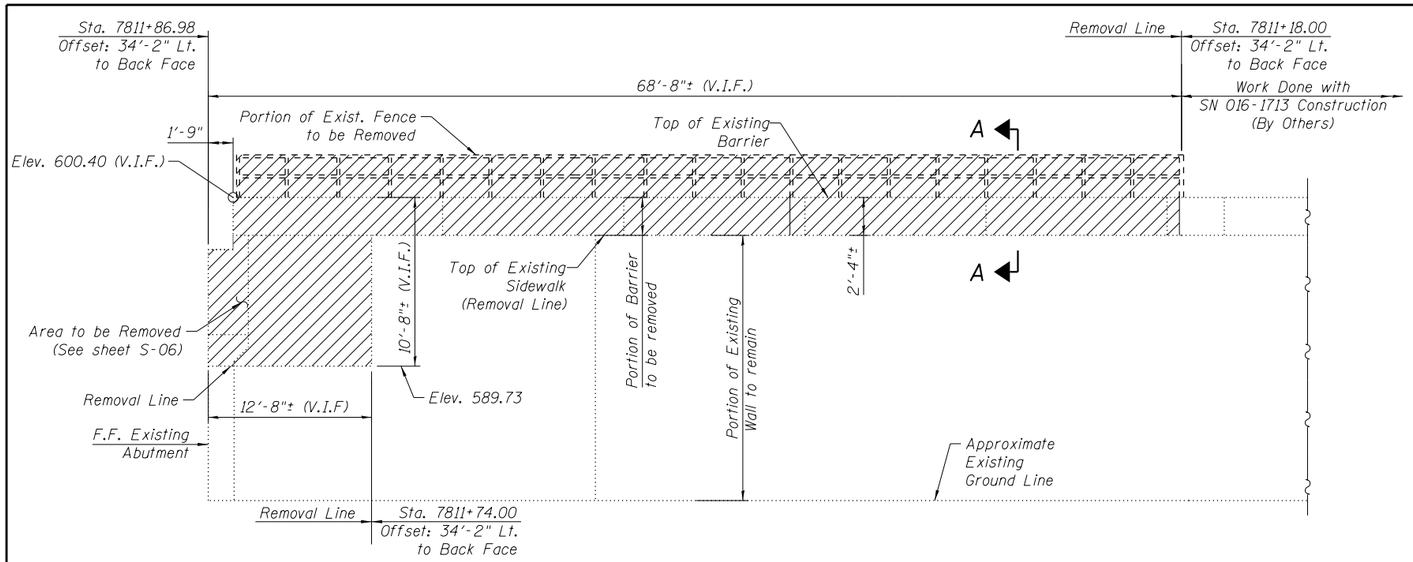

EXISTING ELEVATION

(Looking South)

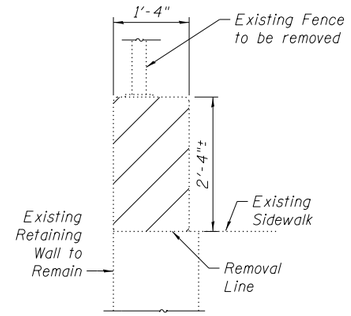

SECTION A-A

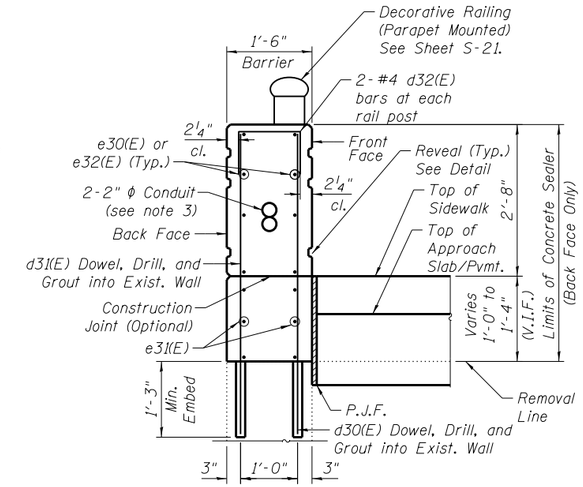

SECTION B-B

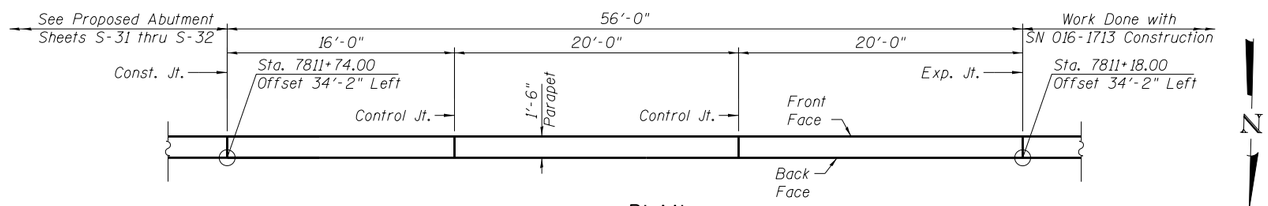

PLAN

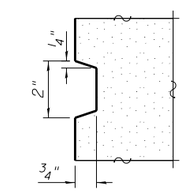

REVEAL DETAIL

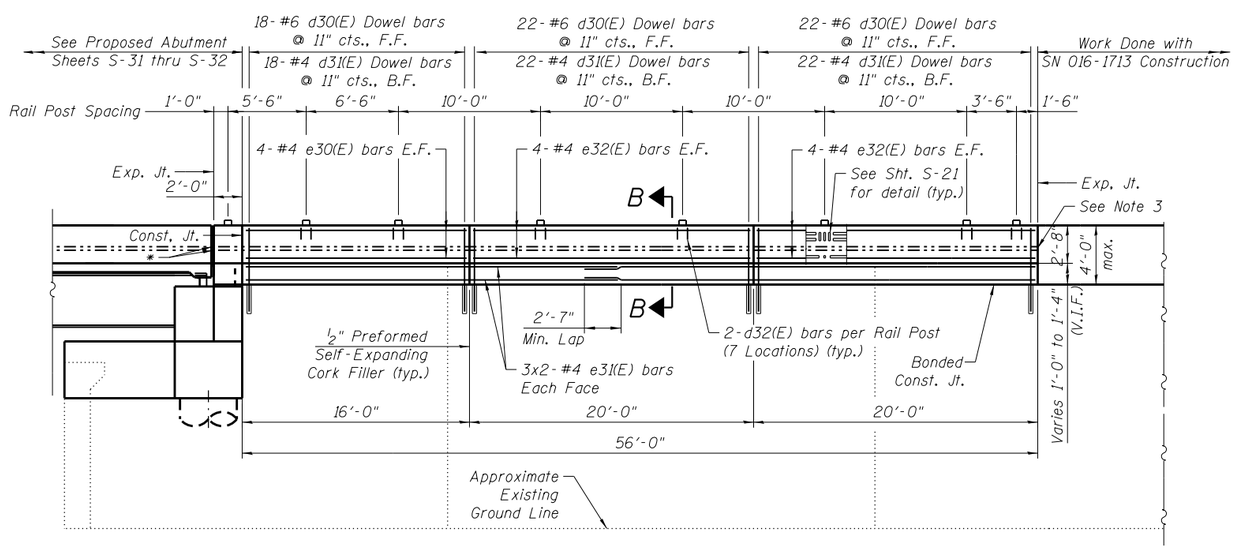

PROPOSED ELEVATION

(Looking South)

*Provide all conduit expansion/deflection fittings at expansion joints.

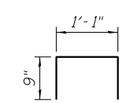

BAR d32(E)

LEGEND:

Removal of Existing Structure (See Sheet S-06)

NOTES:

1. Work this sheet with sheet S-33.
2. Drill and Grout d30(E) and d31(E) into the Concrete to 1/4" larger in dia. than the diameter of the bar used with a Minimum Depth of 15 Inches in accordance with Section 584 of the Standard Specifications. Cost included with Reinforcement Bars, Epoxy Coated pay item.
3. Embedded conduit shall be routed to the end of the new parapet wall and connected to SN. 016-1713 conduit in wall. See Lighting Plans details.
4. Apply Protective Coat to front face and top of Barrier. Concrete Sealer to be applied to back face only.
5. E.F. = Each Face
   F.F. = Front Face
   B.F. = Back Face
   V.I.F. = Verify In Field

BILL OF MATERIAL

Bar	No.	Size	Length	Shape
d30(E) Dowel	62	#6	5'-1"	———
d31(E) Dowel	62	#4	5'-1"	———
d32(E)	14	#4	2'-7"	⊓
e30(E)	8	#4	15'-8"	———
e31(E)	12	#4	29'-2"	———
e32(E)	16	#4	19'-8"	———
Concrete Superstructure			Cu. Yd.	12
Protective Coat			Sq. Yd.	26
Reinforcement Bars, Epoxy Coated			Pound	1,240
Concrete Sealer			Sq. Ft.	215

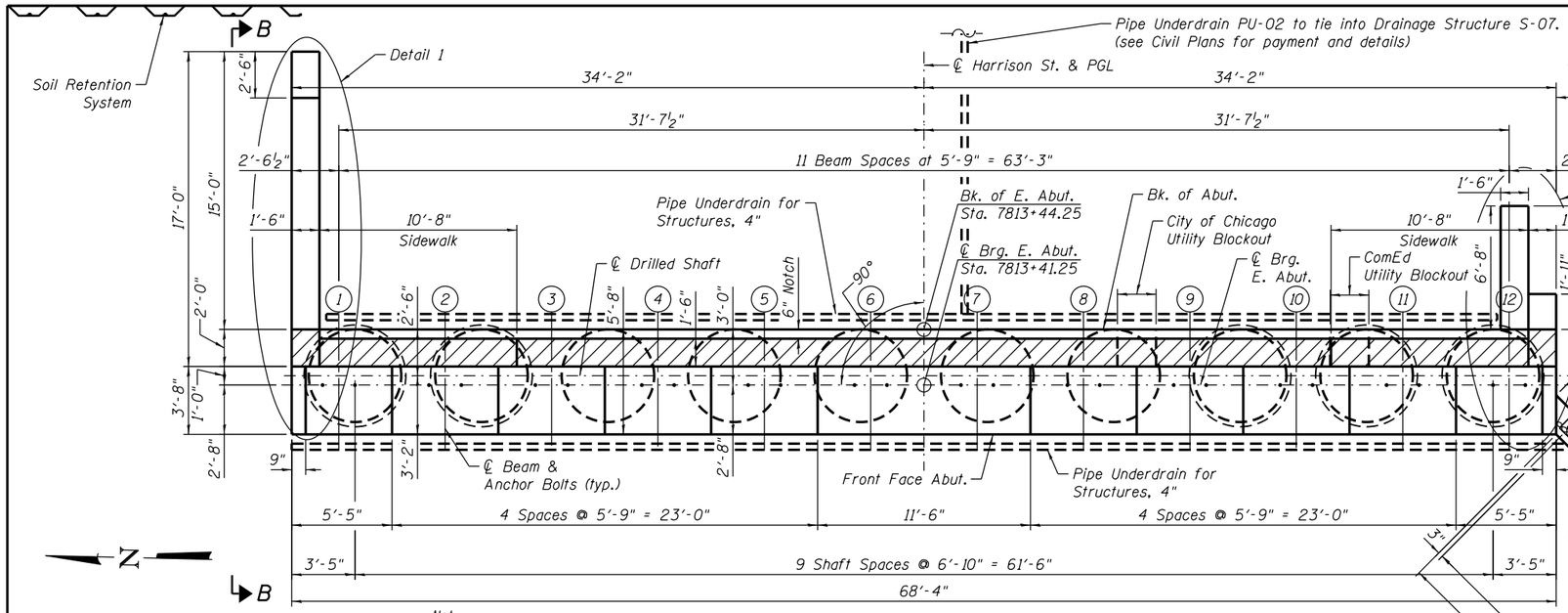

Note:
A drilled shaft shall be tested in accordance with Special Provision for Crosshole Sonic Logging.

PLAN

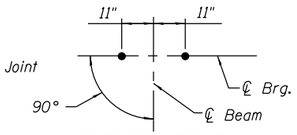

ANCHOR BOLT LAYOUT

NOTES:

1. For section views and details see Sheets S-36 thru S-39.
2. For Anchor Bolt Details see Sheet S-29.
3. Hatched area to be poured after superstructure false work has been removed. Quantity of concrete included with Concrete Superstructure.
4. Concrete in Drilled Shafts to be minimum 7000 psi.
5. Concrete in Abutment Cap, Backwall and Fascia Panel Wall to be minimum 3500 psi.
6. Bars noted thus, 3x2-#5 indicates 3 lines of bars with 2 lengths of bars per line.

TYP. MIN. BAR LAP

(Unless Noted Otherwise)
#5 bar = 3'-3"
#6 bar = 3'-10"
#7 bar = 5'-2"

TOP OF SEAT ELEVATION

Beam No.	Seat Elevation
1	594.43
2	594.52
3	594.61
4	594.70
5	594.79
6	594.88
7	594.88
8	594.79
9	594.70
10	594.61
11	594.52
12	594.43

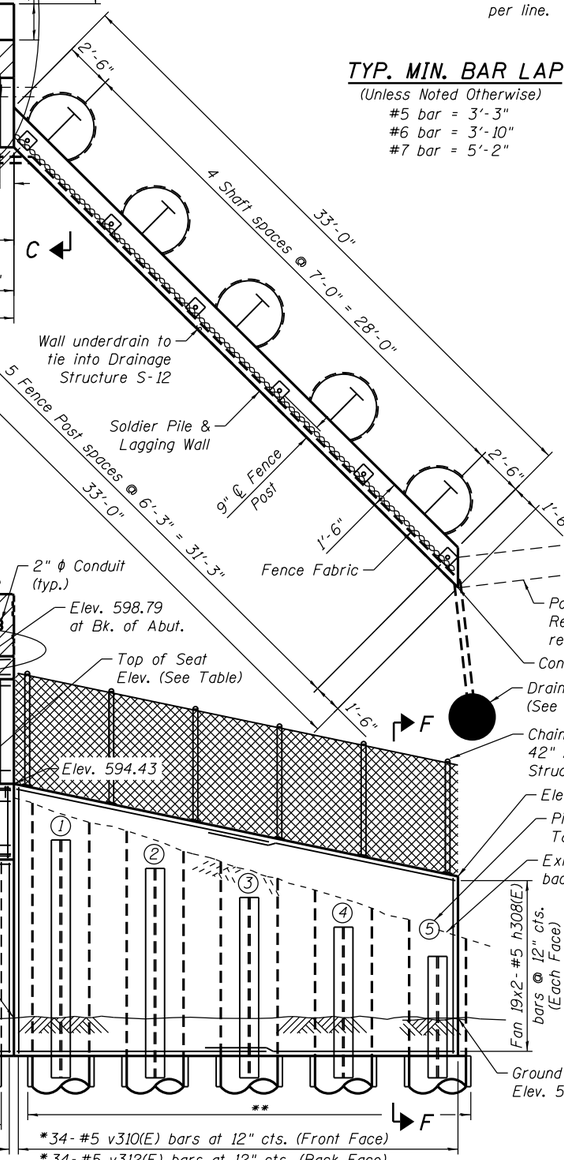

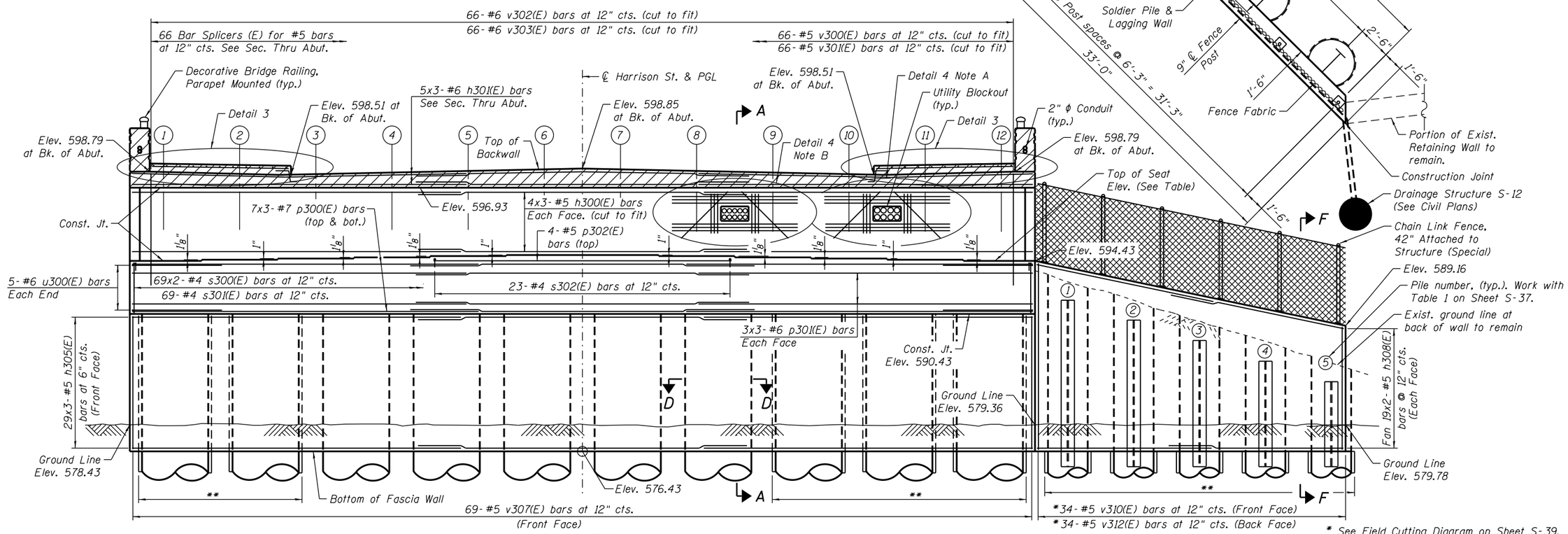

ELEVATION

(Looking East, Cheekwall and Barrier Reinforcement not shown for clarity)

* See Field Cutting Diagram on Sheet S-39.
** ½" min. Permanent Casing these shafts only (shafts to extend thru bulkheaded tunnel)

AECOM

USER NAME = dabezlcd	DESIGNED - BMR	REVISED	
	CHECKED - DEV	REVISED	
PLOT SCALE = N.T.S.	DRAWN - BRD	REVISED	
PLOT DATE = 2/19/2014	CHECKED - DEV	REVISED	

STATE OF ILLINOIS
DEPARTMENT OF TRANSPORTATION

EAST ABUTMENT PLAN AND ELEVATION
STRUCTURE NO. 016-1711

SHEET NO. S-35 OF S-47 SHEETS

F.A.I. RTE.	SECTION	COUNTY	TOTAL SHEETS	SHEET NO.
90/94/290	2013-036R	COOK	256	127
		CONTRACT NO. 60W71		
		ILLINOIS FED. AID PROJECT -NUMBER-		

0161711-60W71-S35-Abutment

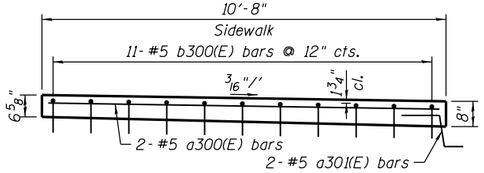

DETAIL 3
(2 Locations)

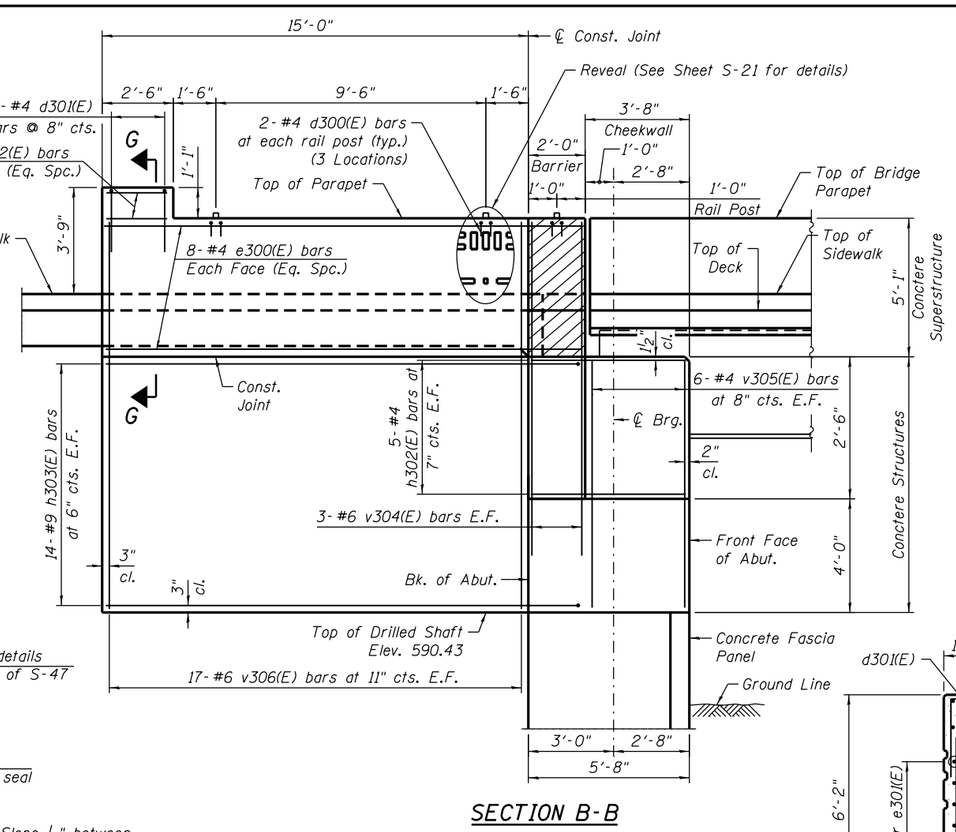

SECTION B-B

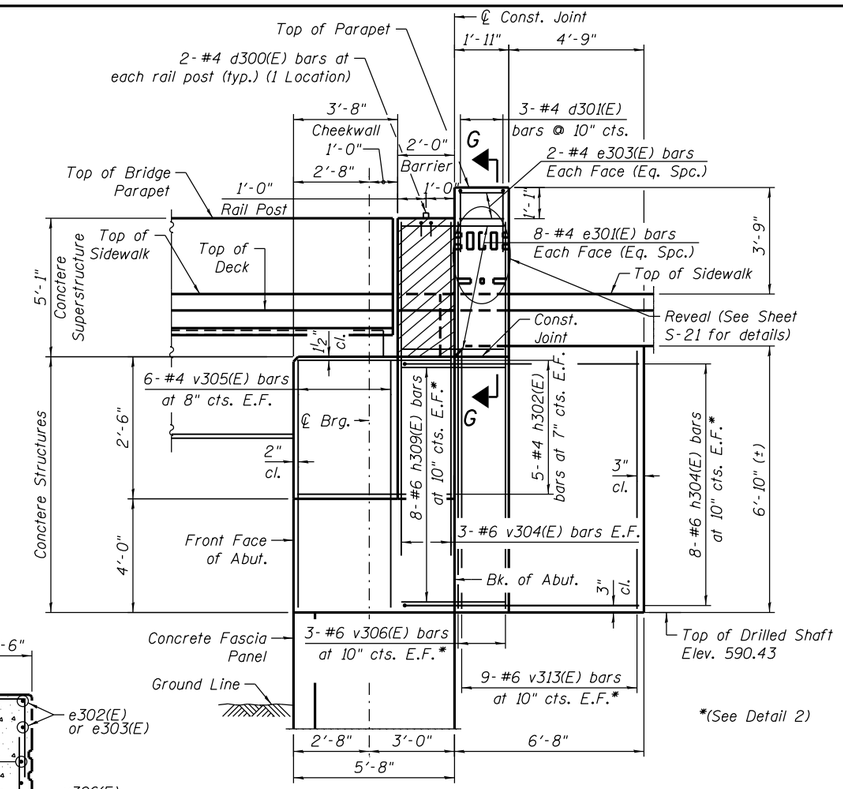

SECTION C-C

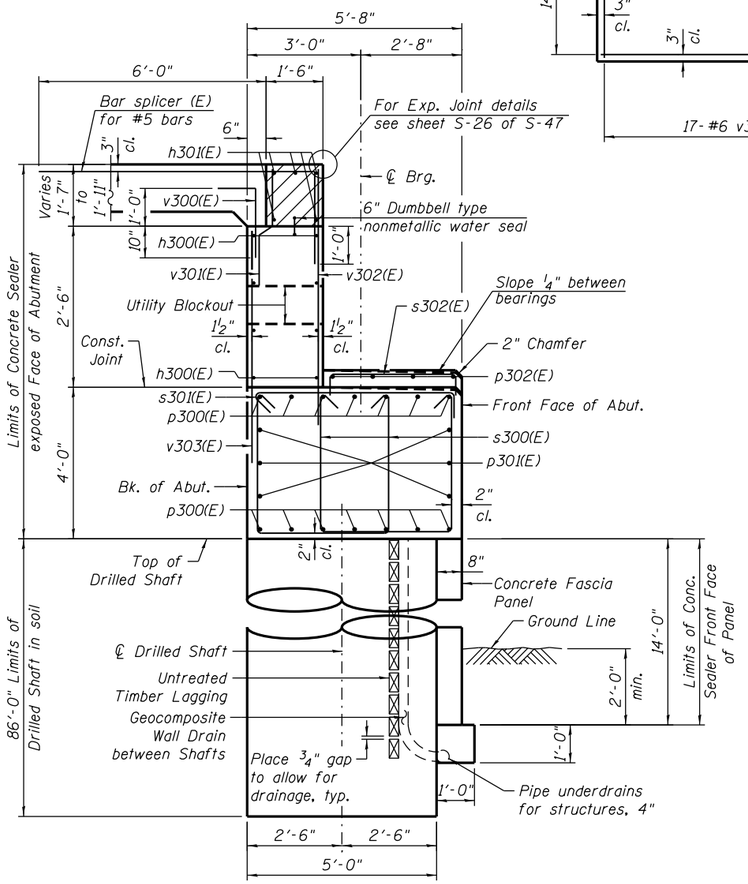

SECTION A-A

DETAIL 4

Note A:
Conduit provided by others. Contractor to coordinate with utility owner for location and size of the utility blockouts. Cost of utility blockouts included in Concrete Structures. (see electrical plans)

Note B:
Cost of utility blockouts included in Concrete Structures. (see electrical plans)

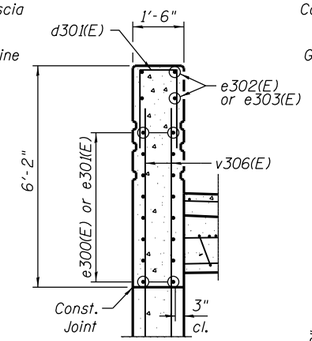

SECTION G-G

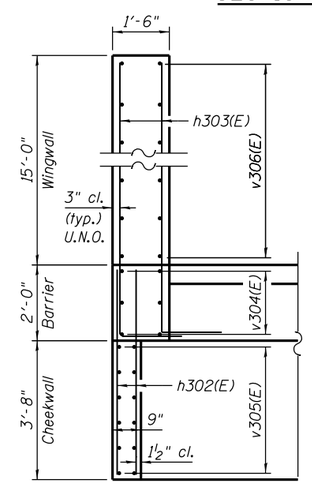

DETAIL 1

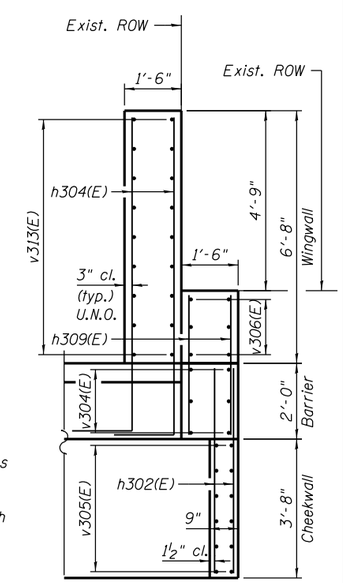

DETAIL 2

NOTES:

1. Hatched area to be poured after superstructure false work has been removed. Quantity of concrete included with Concrete Superstructure.

2. Concrete Sealer shall be applied to abutment backwall, bearing seats and exposed faces of abutment cap, cheekwalls, wingwalls and fascia panel.

3. E.F. = Each Face

4. Bars noted thus, 3x2-#5 indicates 3 lines of bars with 2 lengths of bars per line.

5. Parapet on wingwall concrete included with pay item Concrete Superstructure.

AECOM	USER NAME = dabezicd	DESIGNED - BMR	REVISED
		CHECKED - DEV	REVISED
	PLOT SCALE = N.T.S.	DRAWN - BRD	REVISED
	PLOT DATE = 2/19/2014	CHECKED - DEV	REVISED

STATE OF ILLINOIS
DEPARTMENT OF TRANSPORTATION

EAST ABUTMENT SECTIONS
STRUCTURE NO. 016-1711
SHEET NO. S-36 OF S-47 SHEETS

F.A.I. RTE.	SECTION	COUNTY	TOTAL SHEETS	SHEET NO.
90/94/290	2013-036R	COOK	256	128
		CONTRACT NO. 60W71		
	ILLINOIS	FED. AID PROJECT -NUMBER-		

0161711-60W71-S36-Abutment

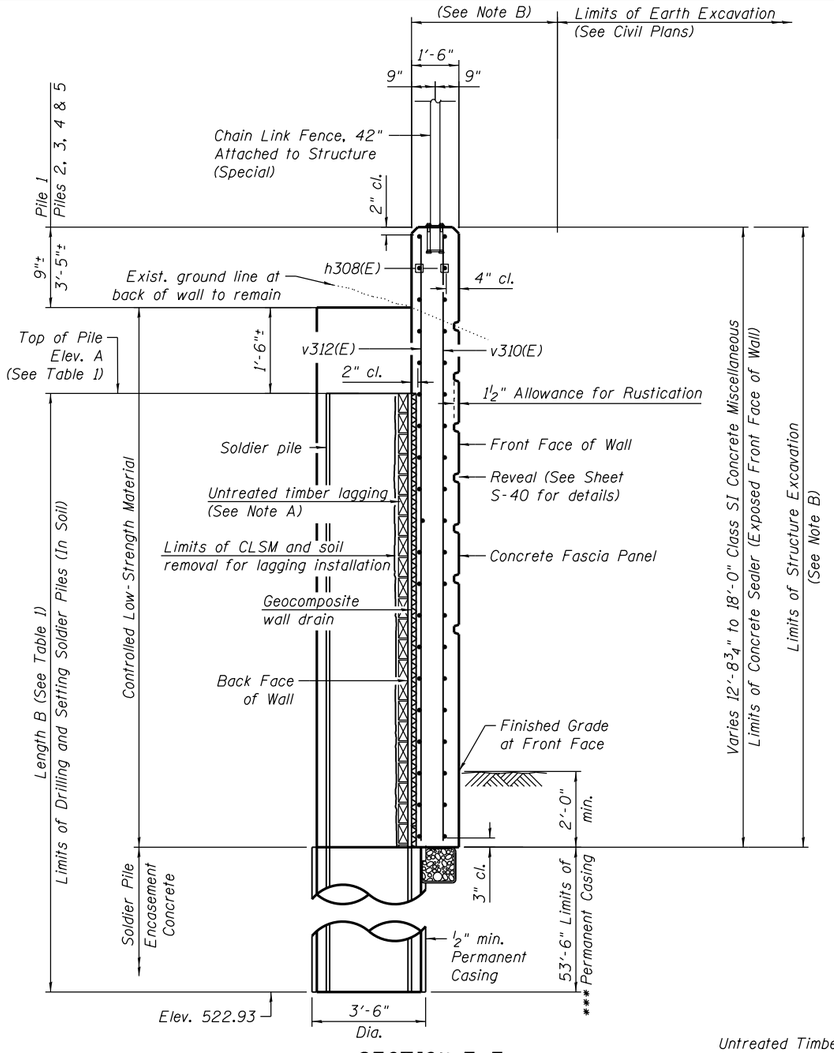

SECTION F-F

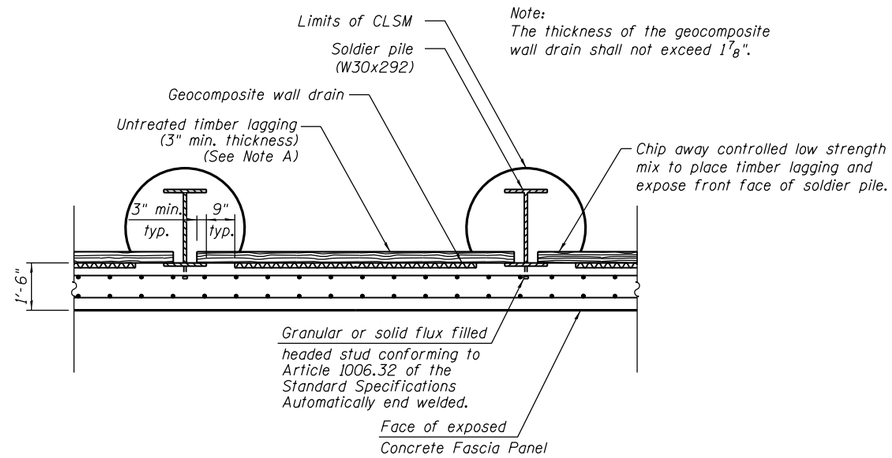

SECTION THRU DRILLED SOLDIER PILE WALL

TABLE 1

Pile	Elev. A	Length B
1	591.76	68'-10"
2	587.85	64'-11"
3	586.85	63'-11"
4	585.76	62'-10"
5	584.76	61'-11"

Note A
The Contractor is responsible for the design and performance of the lagging system, using no less than a 3 in. nominal rough-sawn thickness and timber with a minimum allowable bending stress of 1000 psi, until the concrete facing is installed. Cost included with Untreated Timber Lagging.

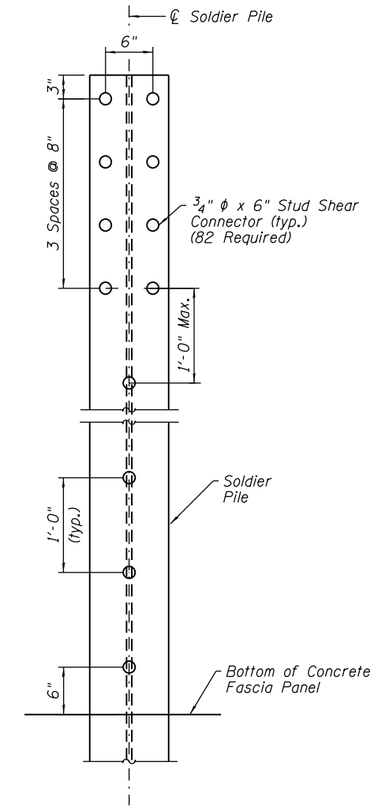

SHEAR STUD DETAIL

NOTES:

1. See Sheet S-38 for Fence Details and for the Suggested Sequence of Construction, Drilled Soldier Pile Wall.

*** Contractor may need to increase the casing thickness to withstand the installation process. See Article 516.06(d) of the Standard Specifications.

Note B:
When structure excavation is necessary to place a concrete facing, it shall be made and paid for according to Section 502 except that the horizontal limits for the structure excavation shall be from the face of the soldier pile to a vertical plane 2 ft. from the finished face of the wall. The depth shall be from the top of the original ground surface to the bottom of the concrete facing.

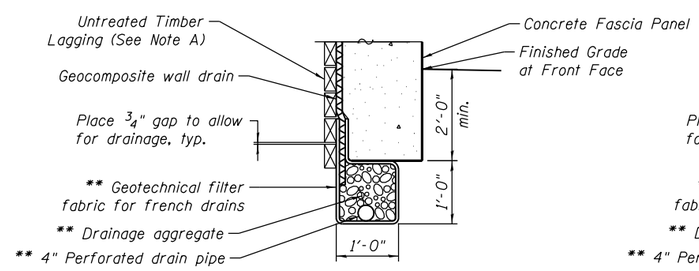

BETWEEN SOLDIER PILES

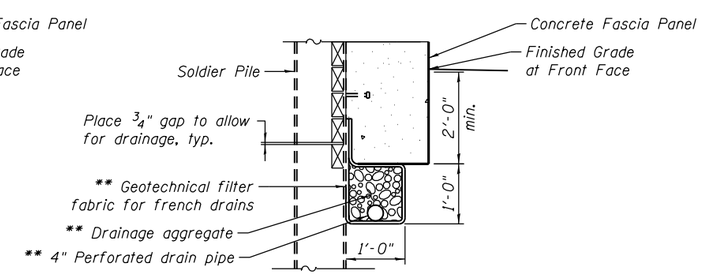

AT SOLDIER PILES

UNDERDRAIN DETAIL FOR SOLDIER PILE WALLS

** Included in the cost of Pipe Underdrains for Structures.

0161711-60W71-S37-Abutment

AECOM	USER NAME = dabezicd	DESIGNED - DD	REVISED
		CHECKED - DEV	REVISED
	PLOT SCALE = N.T.S.	DRAWN - BRD	REVISED
	PLOT DATE = 3/19/2014	CHECKED - DEV	REVISED

STATE OF ILLINOIS
DEPARTMENT OF TRANSPORTATION

SOLDIER PILE AND LAGGING WALL SECTIONS
STRUCTURE NO. 016-1711
SHEET NO. S-37 OF S-47 SHEETS

F.A.I. RTE.	SECTION	COUNTY	TOTAL SHEETS	SHEET NO.
90/94/290	2013-036R	COOK	256	129
		CONTRACT NO. 60W71		
	ILLINOIS	FED. AID PROJECT -NUMBER-		

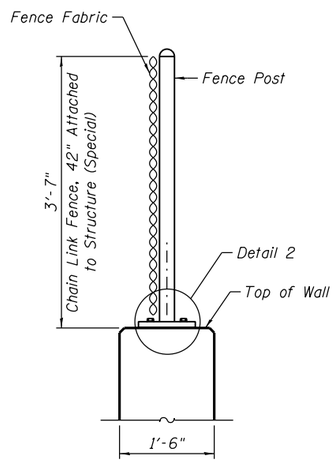

SECTION A-A

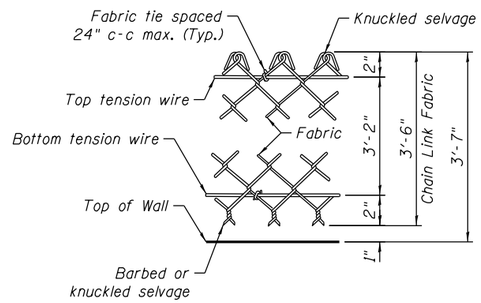

DETAIL 3

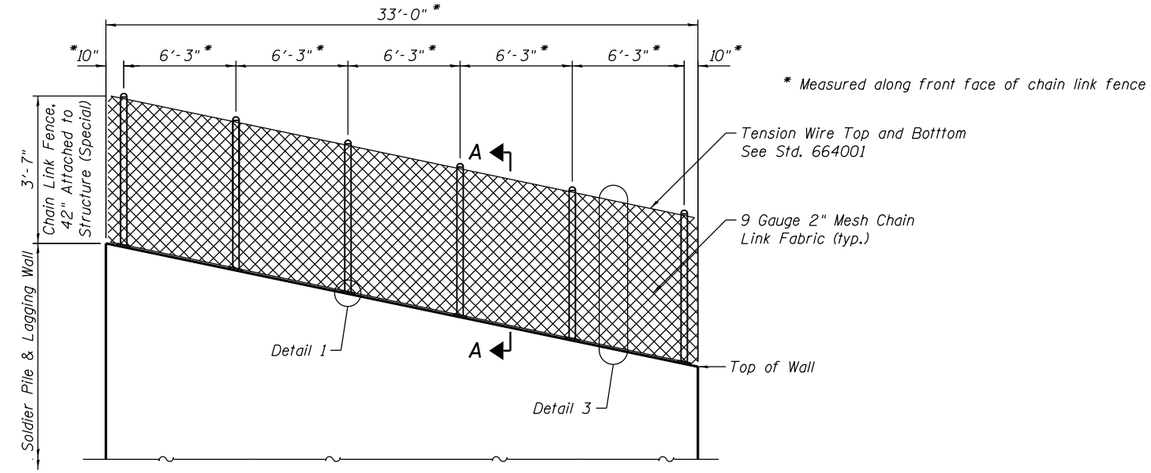

FRONT FACE ELEVATION - TOP OF SOLDIER PILE & LAGGING WALL CHAIN LINK FENCE

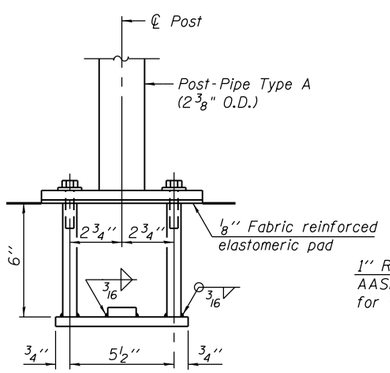

DETAIL 1

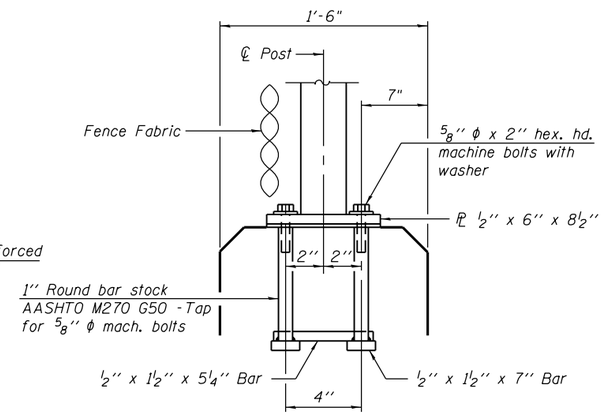

DETAIL 2

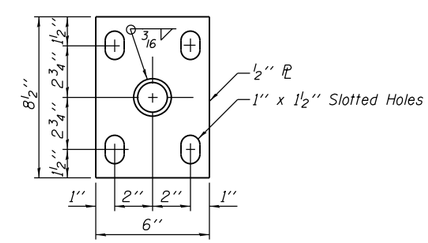

BASE PL

ANCHOR BOLT DETAILS

In lieu of the cast-in-place anchor device shown, the Contractor has the option of drilling and setting 5/8" ϕ anchor rods according to Article 509.06 of the Standard Specifications. Embedment shall be according to the manufacturer's specifications.

NOTES:

1. For additional chain link fence details, see Standard 664001.
2. Base plate and anchor bolts shall be included with Chain Link Fence, 42" Attached to Structure (Special) pay item.

SUGGESTED SEQUENCE OF CONSTRUCTION, DRILLED SOLDIER PILE WALL

A. Install Drilled Soldier Piles - Contractor is alerted to the presence of existing freight tunnels in vicinity of wall. Below is suggested four steps process for pile installation. Contractor may modify proposed method. All procedures must be approved prior to installation.

1. Auger shaft hole while simultaneously pushing permanent casing. Advance to top of tunnel. Permanent casing may be installed in one piece or in sections and spliced. Since Soldier Pile system depends on lateral soil resistance, it is important to match casing size to hole. Grouting to fill voids between soil and casing may be required.
2. Auger/Drill through tunnel, continuing to also install permanent casing. It is anticipated that the contractor will require a different auger bit to continue through the tunnel material.
3. Once past the tunnel elevation, continue auguring through soils while installing casing until top of casing elevation equals existing ground line elevation. Use procedure similar to that described in step one.
4. Continue to auger until plan tip elevation. Push permanent casing (52'-6") as auguring advances using a temporary casing section that is attached to permanent casing with guides or mechanical splice. Once permanent casing reaches tip elevation, the temporary casing can be removed. Temporary splice is bearing only, it is anticipated that guide pieces positioned around the casing will suffice to enable the casing to continue to be pushed. Note that a contractors option is to use permanent casing full height, but pieces of the casing will need to be removed to install lagging.

B. Install WF Section in Drilled Hole

1. Place WF section in hole in plan location.
2. Place Encasement Concrete in augured hole to proposed bottom of facing. Allow Encasement Concrete to set prior to the next step.
3. Place CLSM as shown in plans. Based on field conditions, the temporary casing may be pulled after pouring CLSM if soil is caving, or prior to pour if soil conditions are stable. Allow required curing time of CLSM.

C. Install Lagging

1. Excavate between soldier piles in short lifts starting at top of shaft.
2. Remove sections of CLSM to uncover WF beam flange on exposed side of wall, enough to enable installation of timber lagging behind flange, per plan.
3. Continue working from top down to install remainder of lagging. Minimize over-excavation and grout voids behind lagging as required.

D. Install Underdrain, Wall Drains and Cast-in-Place Wall per Plans

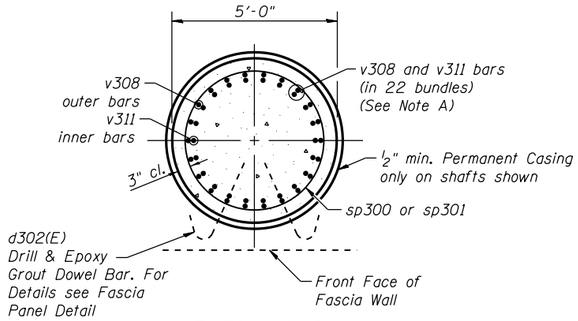

SECTION D-D

Note B:
The Contractor is responsible for the design and performance of the lagging system, using no less than a 3 in. nominal rough-sawn thickness and timber with a minimum allowable bending stress of 1,000 psi, until the concrete facing is installed. The Contractor shall submit design calculations and details prepared by an Illinois Licensed Structural Engineer for the attachment of the lagging to the shaft for approval by the Engineer. Cost Included with Class SI Concrete Miscellaneous.

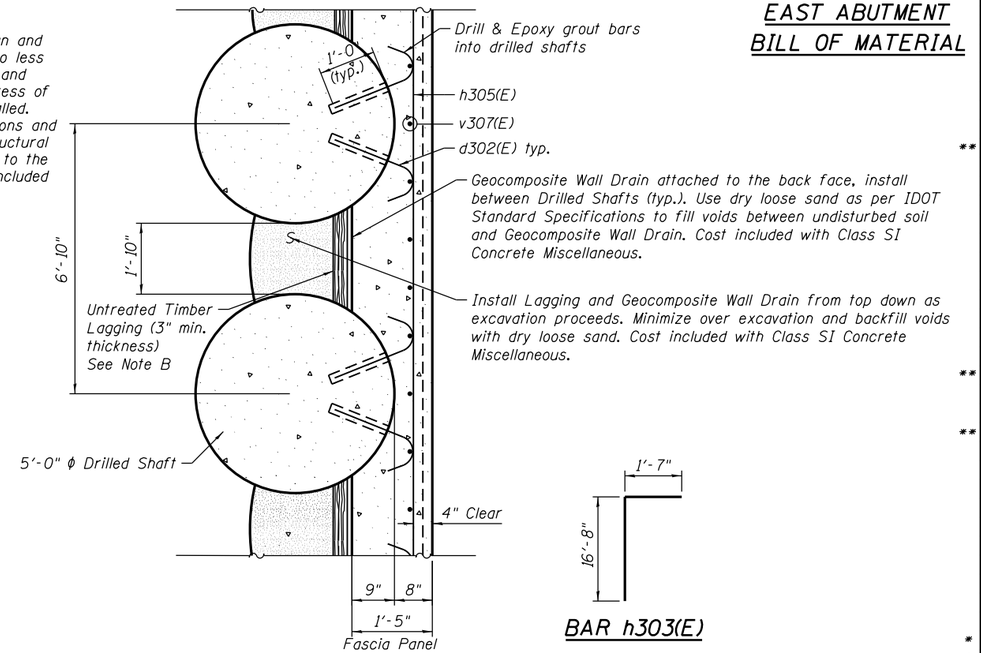

FASCIA PANEL DETAIL

NOTES:

1. When splicing spiral reinforcement is necessary, the spiral shall be provided with 1½ extra turns at the ends to be spliced. These additional turns shall either be welded together according to AWS D1.4 or shall both terminate with a 135° standard hook.
2. Drilling and grouting of d302(E) bars included with Class SI Concrete Miscellaneous pay item.
3. Bars noted thus, 3x2-#5 indicates 3 lines of bars with 2 lengths of bars per line.
4. For details of Bar Splicers see sheet S-44.
5. Contractor to use Mechanical Splicers in drilled shafts that will fit between spirals.

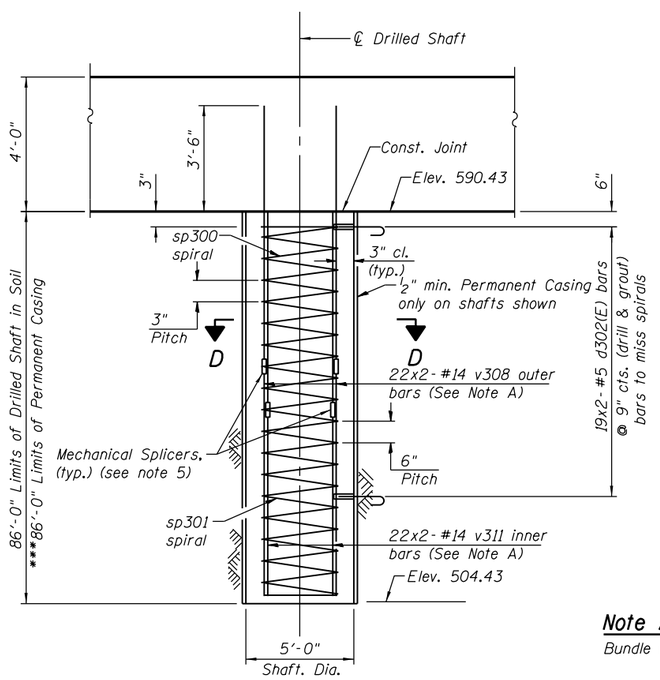

ABUTMENT SHAFT ELEVATION

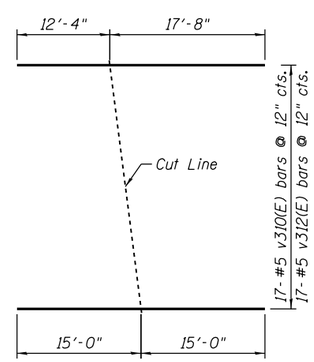

FIELD CUTTING DIAGRAM

Order v310(E) & v312(E) bars full length. Cut as shown and use remainder of bars at opposite end.

Note A:
Bundle v308 outer bars with v311 inner bars.

EAST ABUTMENT BILL OF MATERIAL

	Bar	No.	Size	Length	Shape
	a300(E)	4	#5	10'-4"	
	a301(E)	4	#5	2'-4"	
	b300(E)	22	#5	3'-10"	
	d300(E)	8	#4	2'-7"	
	d301(E)	7	#4	4'-5"	
**	d302(E)	380	#5	1'-11"	
	e300(E)	16	#4	16'-8"	
	e301(E)	16	#4	3'-7"	
	e302(E)	4	#4	2'-2"	
	e303(E)	4	#4	1'-7"	
	h300(E)	24	#5	24'-10"	
	h301(E)	15	#6	25'-3"	
	h302(E)	20	#4	5'-4"	
	h303(E)	28	#9	18'-3"	
	h304(E)	16	#6	9'-4"	
**	h305(E)	87	#5	24'-10"	
	h306(E)	24	#5	9'-6"	
	h307(E)	8	#5	5'-0"	
**	h308(E)	76	#5	18'-2"	
	h309(E)	16	#6	3'-7"	
	p300(E)	42	#7	26'-2"	
	p301(E)	18	#6	25'-3"	
	p302(E)	4	#5	22'-8"	
	s300(E)	138	#4	11'-9"	
	s301(E)	69	#4	6'-4½"	
	s302(E)	23	#4	4'-8"	
*	sp300	10	#6	20'-0"	
*	sp301	10	#6	65'-9"	
	u300(E)	10	#6	15'-8"	
	v300(E)	66	#5	2'-10"	
	v301(E)	66	#5	3'-7"	
	v302(E)	66	#6	6'-6"	
	v303(E)	66	#6	5'-1"	
	v304(E)	12	#6	10'-0"	
	v305(E)	24	#4	6'-0"	
	v306(E)	40	#6	11'-3"	
**	v307(E)	69	#5	13'-8"	
	v308	440	#14	44'-9"	
	v309(E)	24	#5	2'-2"	
**	v310(E)	17	#5	30'-0"	
	v311	440	#14	43'-0"	
**	v312(E)	17	#5	30'-0"	
	v313(E)	18	#6	6'-6"	

Granular Backfill for Structures	Cu. Yd.	113
Structure Excavation	Cu. Yd.	491
Concrete Structures	Cu. Yd.	82
Concrete Superstructure	Cu. Yd.	14
Protective Coat	Sq. Yd.	11
Reinforcement Bars	Pound	340,200
Reinforcement Bars, Epoxy Coated	Pound	11,480
Permanent Casing	Foot	698
Drilled Shaft In Soil	Cu. Yd.	626
Concrete Sealer	Sq. Ft.	2,147
**** Geocomposite Wall Drain	Sq. Yd.	97
Pipe Underdrain for Structures 4"	Foot	166
Class SI Concrete Miscellaneous	Cu. Yd.	69
Crosshole Sonic Logging	Each	1
Stud Shear Connectors	Each	82
Untreated Timber Lagging	Sq. Ft.	458
Drilling and Setting Soldier Piles (In Soil)	Cu. Ft.	3,101
Furnishing Soldier Piles (W Section)	Foot	323
Chain Link Fence, 42" Attached to Structure (Special)	Foot	33

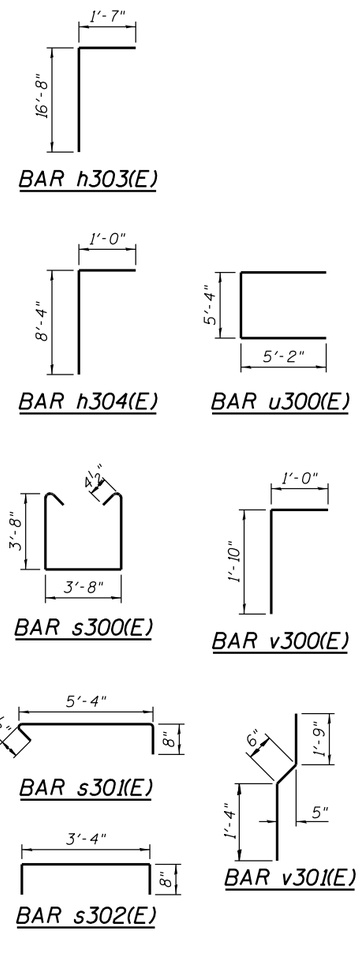

*** Contractor may need to increase the casing thickness to withstand the installation process. See Article 516.06(d) of the Standard Specifications.

**** Quantity shown is for Geocomposite Wall Drain behind E. Abut and Soldier Pile and Lagging wall. Geocomposite Wall Drain between shafts shall be included with Class SI Concrete Miscellaneous. Estimated Quantity = 29 Sq. Yd.

* Length is height of spiral

** Shown for information only. Cost included with Class SI Concrete Miscellaneous

AECOM

USER NAME = dabezlcd	DESIGNED - BMR	REVISED	
	CHECKED - DEV	REVISED	
PLOT SCALE = N.T.S.	DRAWN - BRD	REVISED	
PLOT DATE = 3/19/2014	CHECKED - DEV	REVISED	

STATE OF ILLINOIS
DEPARTMENT OF TRANSPORTATION

EAST ABUTMENT DETAILS
STRUCTURE NO. 016-1711

SHEET NO. S-39 OF S-47 SHEETS

F.A.I. RTE.	SECTION	COUNTY	TOTAL SHEETS	SHEET NO.
90/94/290	2013-036R	COOK	256	131
		CONTRACT NO. 60W71		
		ILLINOIS FED. AID PROJECT -NUMBER-		

0161711-60W71-S39-Abutment

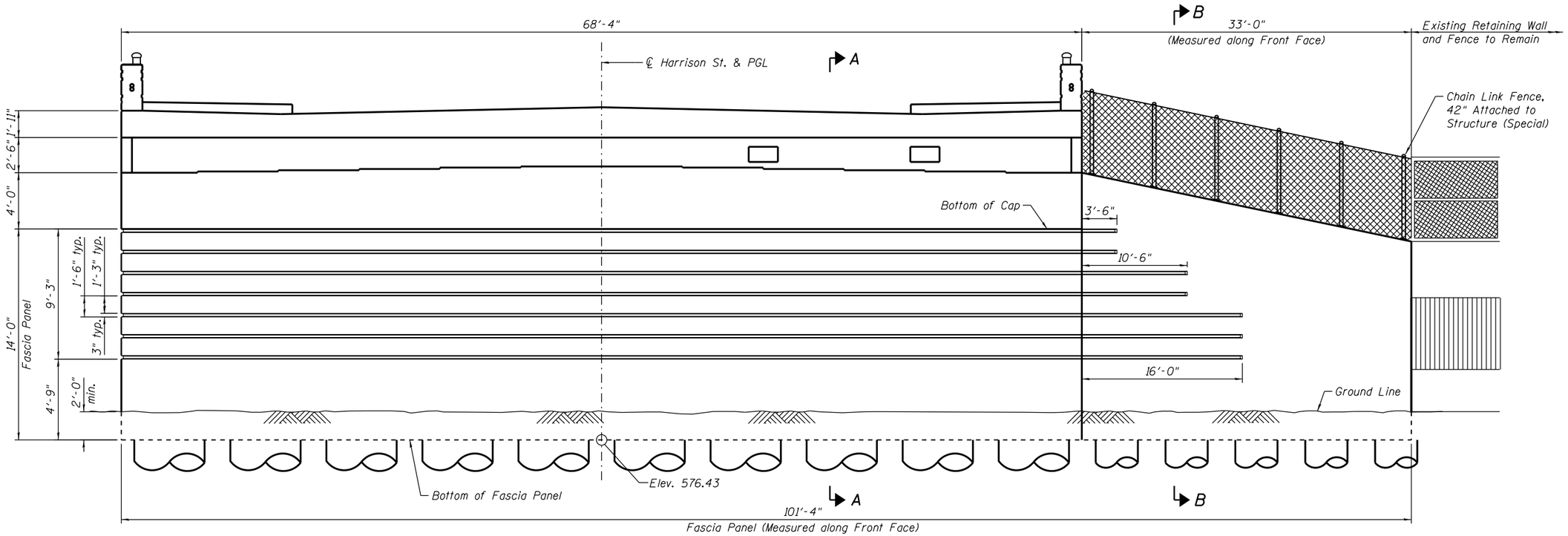

EAST ABUTMENT ELEVATION

(Looking East)

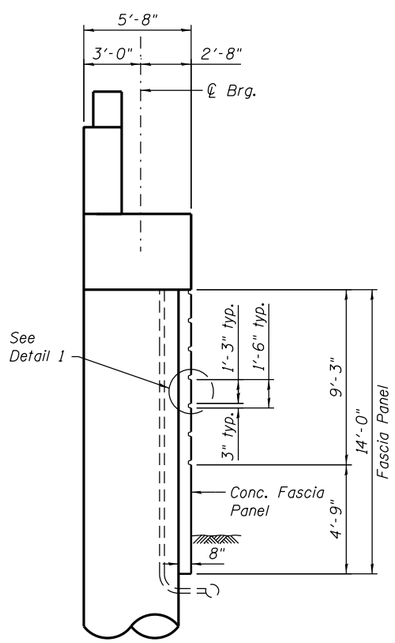

SECTION A-A

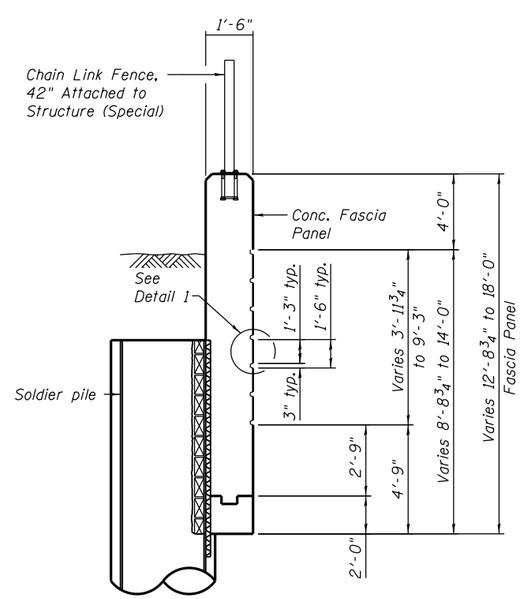

SECTION B-B

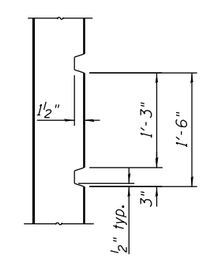

DETAIL 1

NOTES:

1. The 3" x 1½" reveal in the fascia panel will not be paid separately and shall be included in the cost of the pay item Class SI Concrete Miscellaneous.

0161711-60W71-S40-Abutment

AECOM	USER NAME = dabezicd	DESIGNED - EJO	REVISED
		CHECKED - DEV	REVISED
	PLOT SCALE = N.T.S.	DRAWN - BRD	REVISED
	PLOT DATE = 2/19/2014	CHECKED - DEV	REVISED

STATE OF ILLINOIS
DEPARTMENT OF TRANSPORTATION

EAST ABUTMENT ARCHITECTURAL DETAILS
STRUCTURE NO. 016-1711

SHEET NO. S-40 OF S-47 SHEETS

F.A.I. RTE.	SECTION	COUNTY	TOTAL SHEETS	SHEET NO.
90/94/290	2013-036R	COOK	256	132
		CONTRACT NO. 60W71		
	ILLINOIS	FED. AID PROJECT -NUMBER-		

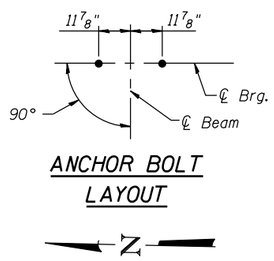

ANCHOR BOLT LAYOUT

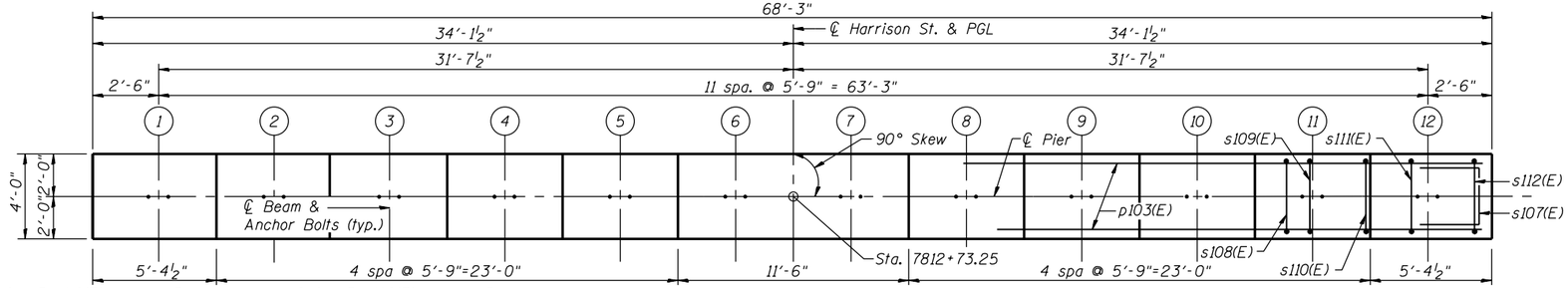

TOP PLAN

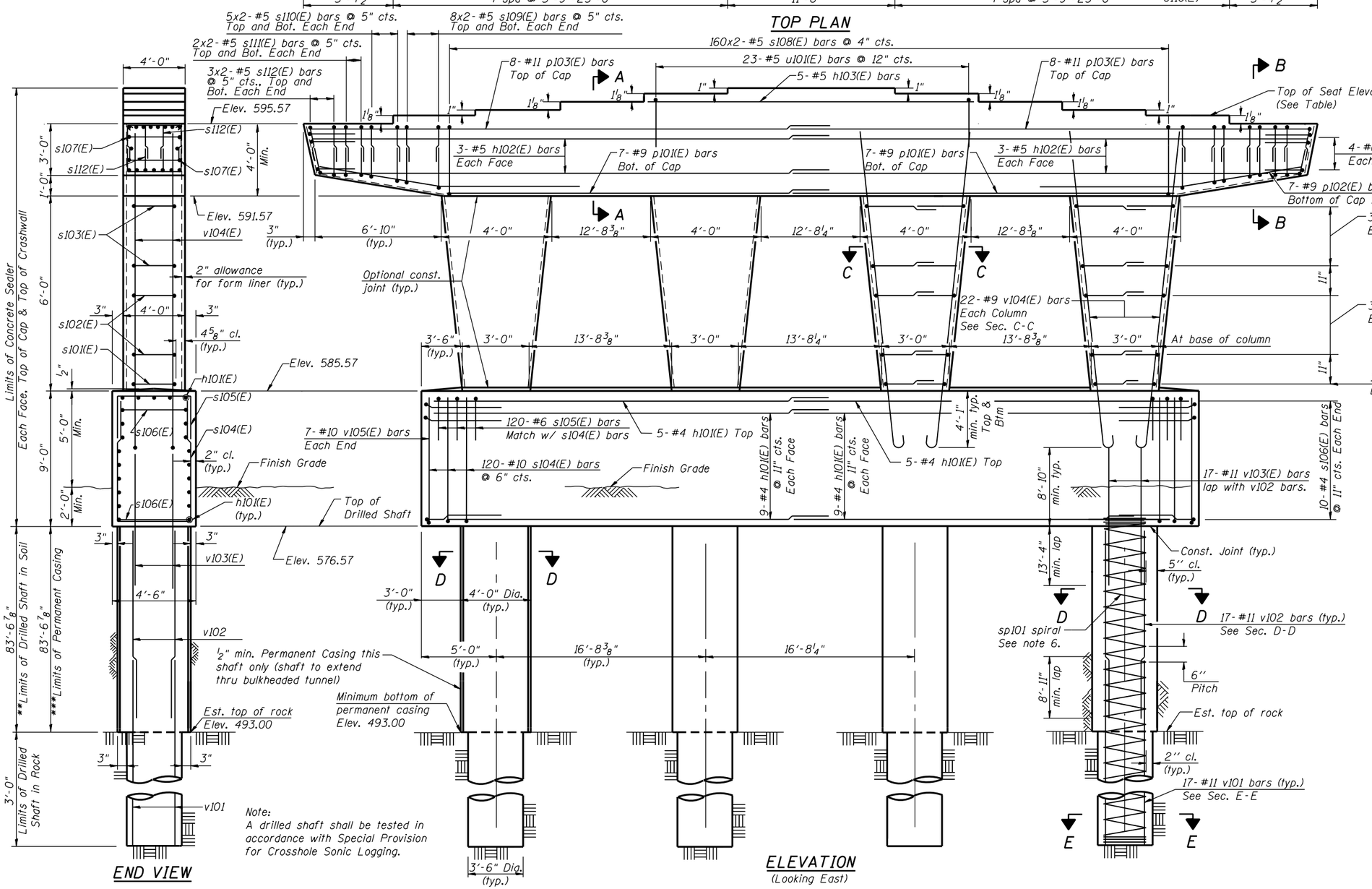

Note:
A drilled shaft shall be tested in accordance with Special Provision for Crosshole Sonic Logging.

END VIEW

ELEVATION
(Looking East)

NOTES:

1. Space reinforcement in cap to miss anchor bolts.
2. Pour steps monolithically with cap.
3. For section cuts see next sheet.
4. For Anchor Bolt Details see sheet S-30.
5. Bars noted thus, 3x2-#5 indicates 3 lines of bars with 2 lengths of bars per line.
6. #5 sp101 spiral, each drilled shaft
   1. Provide 1 1/2 extra turns, shop welded together per AWS D1.4 top and bottom. Extend spiral 2" into crashwall. Provide 4-#4 spacers or equivalent.
   2. When splicing spiral reinforcement is necessary, the spiral shall be provided with 1 1/2 extra turns at the ends to be spliced. These additional turns shall either be welded together according to AWS D1.4 or shall both terminate with a 135° standard hook.

TYP. MIN. BAR LAP

(Unless Noted Otherwise)
#4 bar = 2'-7"
#5 bar = 3'-3"
#9 bar = 8'-7"
#10 bar = 10'-10"
#11 bar = 13'-4"

TOP OF SEAT ELEVATION

Beam No.	Seat elevation
1	595.57
2	595.66
3	595.75
4	595.84
5	595.93
6	596.02
7	596.02
8	595.93
9	595.84
10	595.75
11	595.66
12	595.57

** The quantities and reinforcement detailing are based on the top of shaft and the estimated top of rock elevations shown and may change based on the actual top of rock elevations encountered at each shaft and the final top of shaft elevation.

*** Contractor may need to increase the casing thickness to withstand the installation process. The Estimated Top of Rock/Bottom of Permanent Casing Elevation is shown. The limits of casing shall be adjusted as necessary, and as approved, such that the actual installed casing length extends to the as-encountered top of rock at each shaft. See Article 516.06(d) of the Standard Specifications.

0161711-60W71-S41-Pier

AECOM

USER NAME = dabezlcd	DESIGNED - EJO	REVISED	
	CHECKED - BMR	REVISED	
PLOT SCALE = N.T.S.	DRAWN - BRD	REVISED	
PLOT DATE = 2/19/2014	CHECKED - DD	REVISED	

STATE OF ILLINOIS
DEPARTMENT OF TRANSPORTATION

PIER PLAN AND ELEVATION
STRUCTURE NO. 016-1711

SHEET NO. S-41 OF S-47 SHEETS

F.A.I. RTE.	SECTION	COUNTY	TOTAL SHEETS	SHEET NO.
90/94/290	2013-036R	COOK	256	133

CONTRACT NO. 60W71

ILLINOIS FED. AID PROJECT -NUMBER-

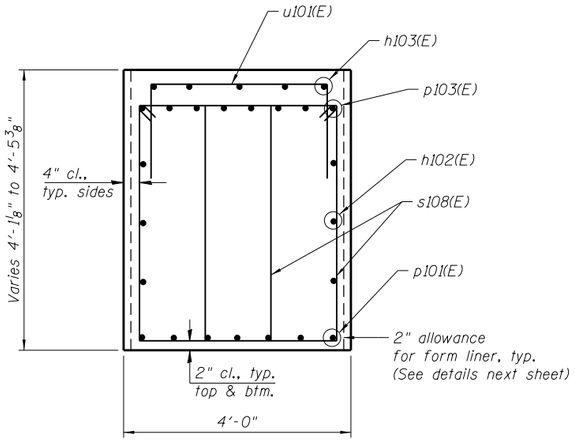

SECTION A-A

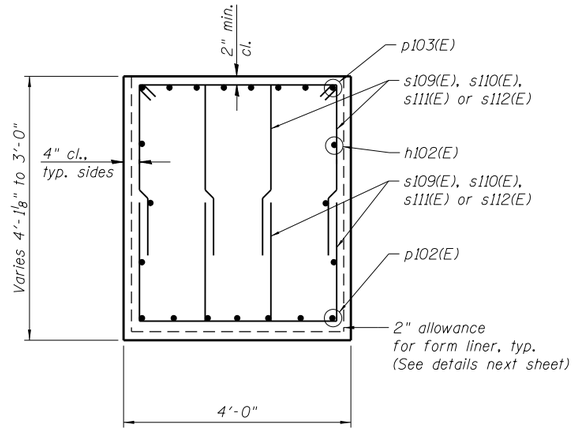

SECTION B-B

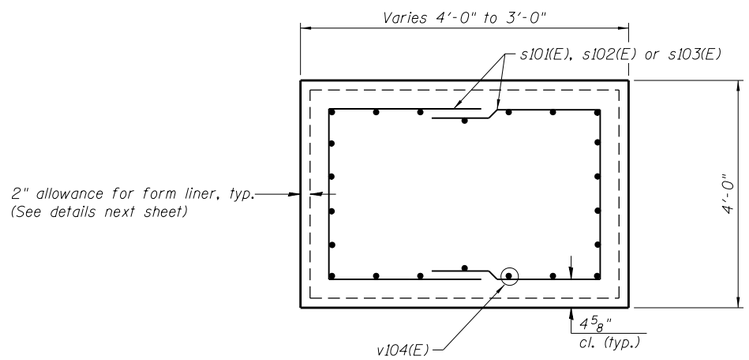

SECTION C-C

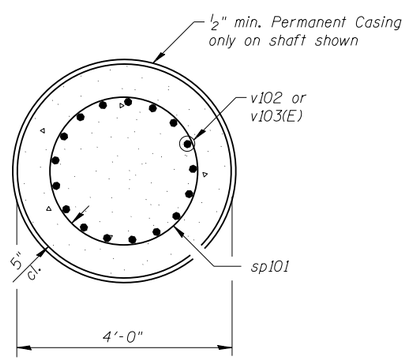

SECTION D-D

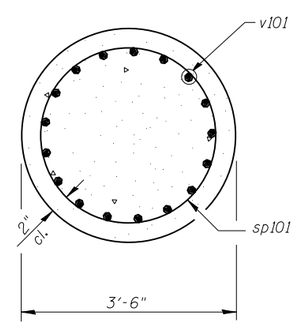

SECTION E-E

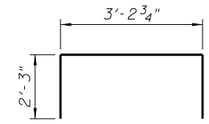

BAR s101(E)

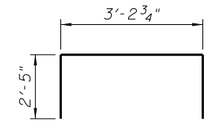

BAR s102(E)

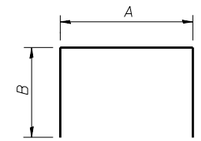

BARS

A & B DIMENSIONS

Bar	A	B
s104(E)	4'-2"	8'-8"
s105(E)	4'-2"	3'-1"
s106(E)	4'-2"	3'-1"
s107(E)	3'-4"	1'-5"

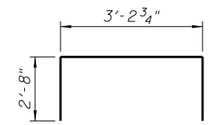

BAR s103(E)

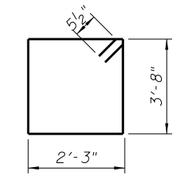

BAR s108(E)

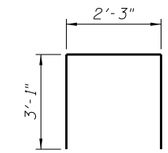

BAR s109(E)

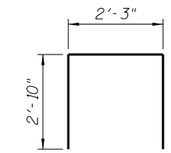

BAR s110(E)

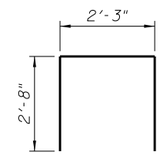

BAR s111(E)

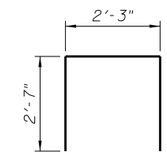

BAR s112(E)

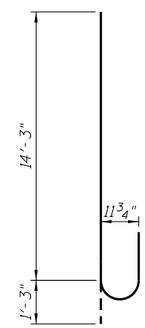

BAR v104(E)

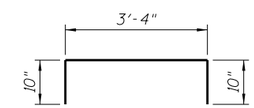

BAR u101(E)

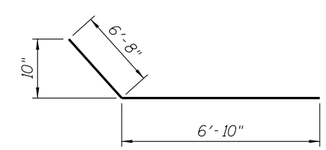

BAR p102(E)

BILL OF MATERIAL

Bar	No.	Size	Length	Shape
h101(E)	46	#4	31'-2"	
h102(E)	12	#5	35'-7"	
h103(E)	5	#5	22'-8"	
p101(E)	14	#9	31'-2"	
p102(E)	14	#9	13'-6"	
p103(E)	16	#11	40'-8"	
s101(E)	8	#4	7'-8 3/4"	
s102(E)	24	#4	8'-0 3/4"	
s103(E)	24	#4	8'-6 3/4"	
s104(E)	120	#10	21'-6"	
s105(E)	120	#6	10'-4"	
s106(E)	20	#4	10'-4"	
s107(E)	8	#6	6'-2"	
s108(E)	320	#5	12'-9"	
s109(E)	64	#5	8'-5"	
s110(E)	40	#5	7'-11"	
s111(E)	16	#5	7'-7"	
s112(E)	24	#5	7'-5"	
** sp101	4	#5	86'-9"	
u101(E)	23	#5	5'-0"	
v101	68	#11	60'-0"	
v102	68	#11	35'-6"	
v103(E)	68	#11	22'-2"	
v104(E)	88	#9	15'-6"	
v105(E)	14	#10	8'-8"	
Structure Excavation			Cu. Yd.	124
Concrete Structures			Cu. Yd.	145
Reinforcement Bars			Pound	41,710
Reinforcement Bars Epoxy Coated			Pound	39,340
Permanent Casing			Foot	84
Drilled Shaft in Soil			Cu. Yd.	156
Drilled Shaft in Rock			Cu. Yd.	5
Concrete Sealer			Sq. Ft.	2,815
Crosshole Sonic Logging			Each	1

** Length is height of spiral.

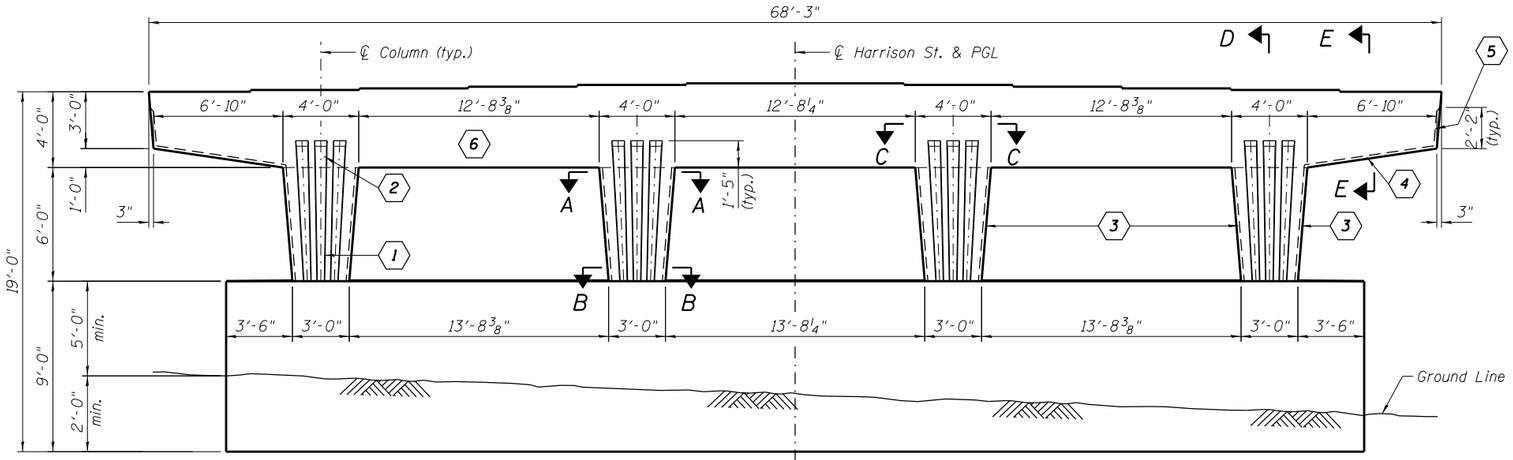

PIER ELEVATION
(Looking West)

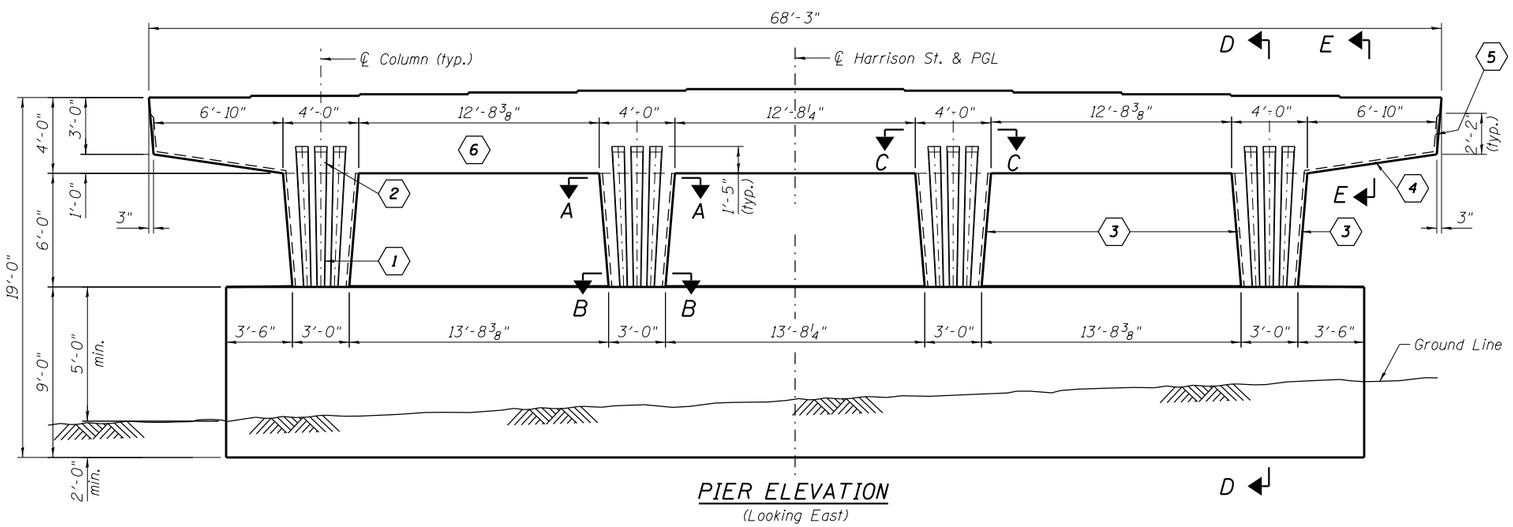

PIER ELEVATION
(Looking East)

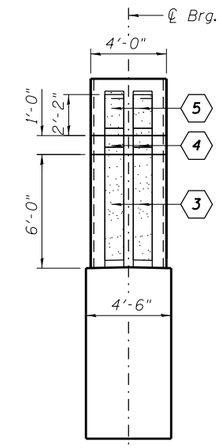

PIER END VIEW
(Looking South)
(Looking North - Sim.)

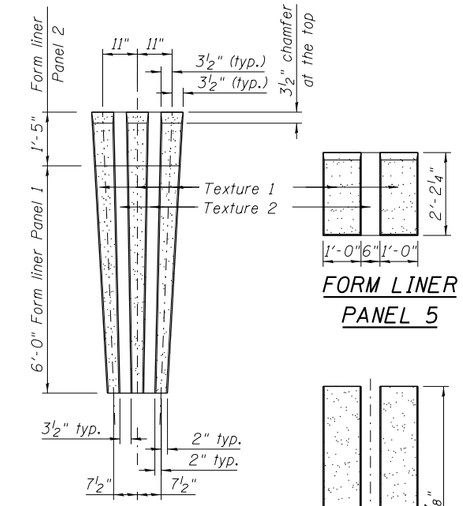

FORM LINER PANEL 1 & 2

FORM LINER PANEL 5

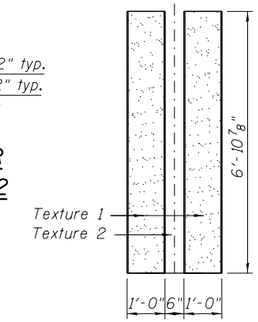

FORM LINER PANEL 4

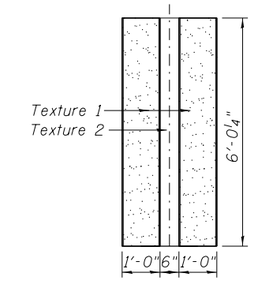

FORM LINER PANEL 3

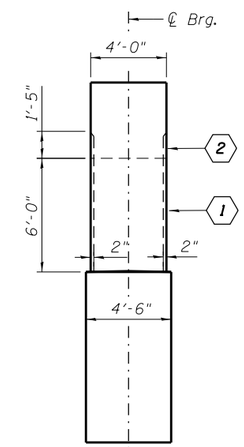

SECTION D-D

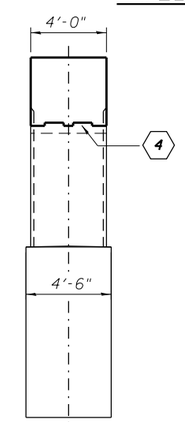

SECTION E-E

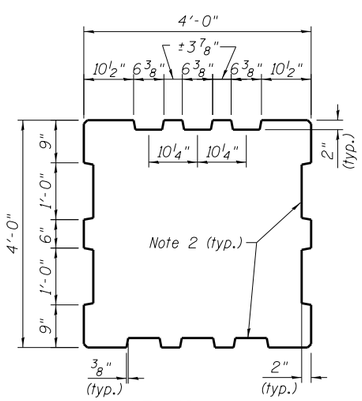

SECTION A-A
At Top of Column

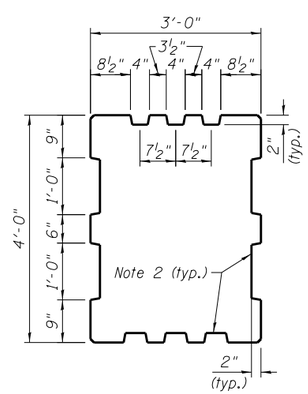

SECTION B-B
At Bottom of Column

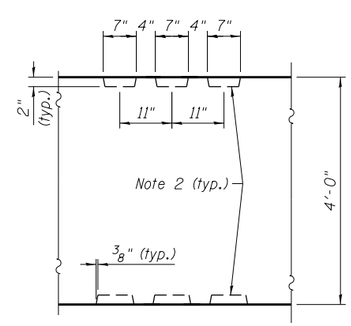

SECTION C-C
In Cap

NOTES:

1. Alternate: Surface indicated as Textured Form Liner Panel (6) shall be smooth. Contractor can choose to build large protrusion of panel (2) directly into forms of panel (6) if a smooth uniform surface can be provided.
2. Tapered fluting - dimensions vary, see elevation profile.
3. Form liner panel (2) is continuation of panel (1). Keep adjacent form liners aligned.
4. Hand clean and smooth the surface of the construction joint between the pier and cap.
5. Texture 1: Light Sandblast as selected from manufacturer's standard pattern selection.
   Texture 2: Smooth

LEGEND

(1) (2) (3) (4) (5) (6)

Textured Form Liner Panel

BILL OF MATERIAL

Item	Unit	Total
Form Liner Textured Surface	Sq. Ft.	1,002

AECOM

USER NAME = dunkerleyb	DESIGNED - EJO	REVISED	
	CHECKED - BMR	REVISED	
PLOT SCALE = N.T.S.	DRAWN - BRD	REVISED	
PLOT DATE = 12/17/2013	CHECKED - DD	REVISED	

STATE OF ILLINOIS
DEPARTMENT OF TRANSPORTATION

PIER ARCHITECTURAL DETAILS
STRUCTURE NO. 016-1711

SHEET NO. S-43 OF S-47 SHEETS

F.A.I. RTE.	SECTION	COUNTY	TOTAL SHEETS	SHEET NO.
90/94/290	2013-036R	COOK	256	135

CONTRACT NO. 60W71

ILLINOIS FED. AID PROJECT -NUMBER-

016171I-60W71-S43-Pier

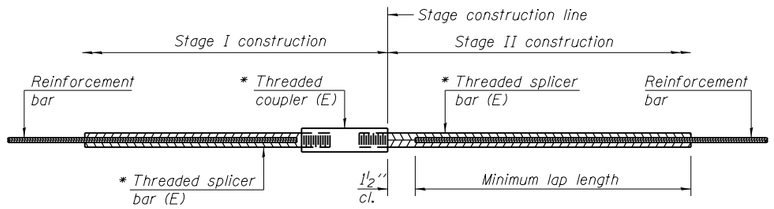

STANDARD BAR SPLICER ASSEMBLY

Minimum Lap Lengths						
Bar size to be spliced	Table 1	Table 2	Table 3	Table 4	Table 5	Table 6
3, 4	1'-5"	1'-11"	2'-1"	2'-4"	2'-7"	2'-11"
5	1'-9"	2'-5"	2'-7"	2'-11"	3'-3"	3'-8"
6	2'-1"	2'-11"	3'-1"	3'-6"	3'-10"	4'-5"
7	2'-9"	3'-10"	4'-2"	4'-8"	5'-2"	5'-10"
8	3'-8"	5'-1"	5'-5"	6'-2"	6'-9"	7'-8"
9	4'-7"	6'-5"	6'-10"	7'-9"	8'-7"	9'-8"

Table 1: Black bar, 0.8 Class C
Table 2: Black bar, Top bar lap, 0.8 Class C
Table 3: Epoxy bar, 0.8 Class C
Table 4: Epoxy bar, Top bar lap, 0.8 Class C
Table 5: Epoxy bar, Class C
Table 6: Epoxy bar, Top bar top, Class C

Threaded splicer bar length = min. lap length + 1½" + thread length

* Epoxy not required on Bar Splicer Assembly components used in conjunction with black bars.

Location	Bar size	No. assemblies required	Table for minimum lap length

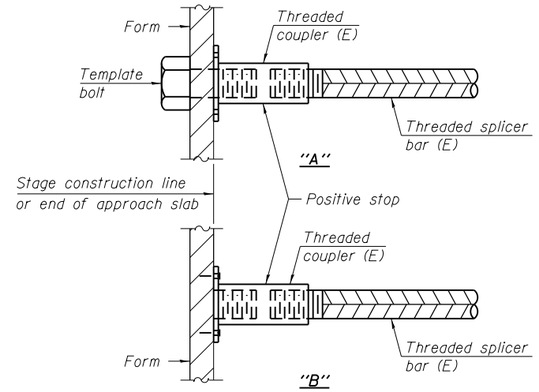

INSTALLATION AND SETTING METHODS

"A" : Set bar splicer assembly by means of a template bolt.
"B" : Set bar splicer assembly by nailing to wood forms or cementing to steel forms.
(E) : Indicates epoxy coating.

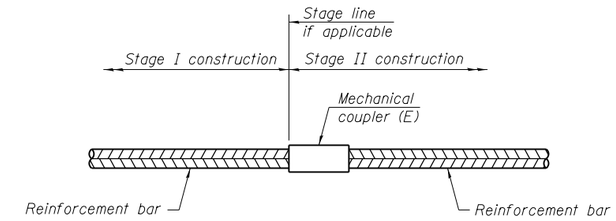

STANDARD MECHANICAL SPLICER

Location	Bar size	No. assemblies required
East Abutment	#14	440

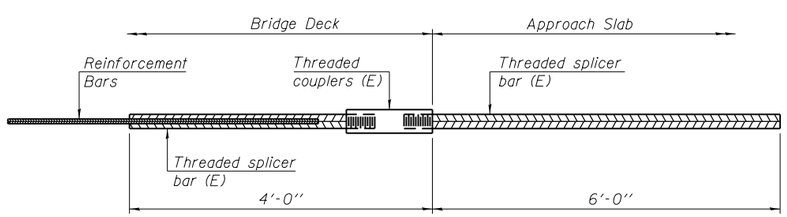

BAR SPLICER ASSEMBLY FOR #5 BAR ON INTEGRAL OR SEMI-INTEGRAL ABUTMENTS

No. required =

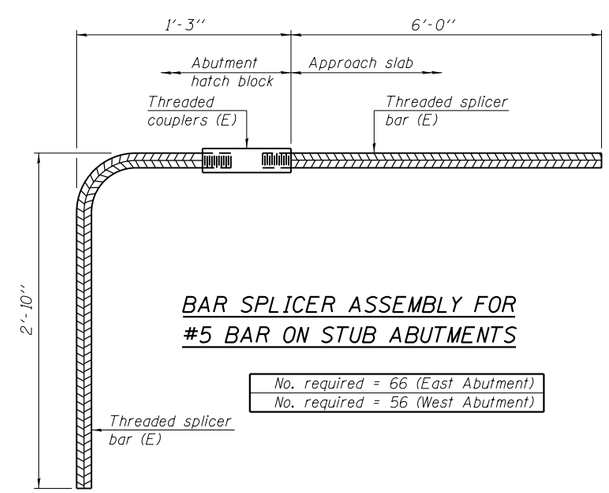

BAR SPLICER ASSEMBLY FOR #5 BAR ON STUB ABUTMENTS

No. required = 66 (East Abutment)
No. required = 56 (West Abutment)

NOTES

Splicer bars shall be deformed with threaded ends and have a minimum 60 ksi yield strength.

All reinforcement shall be lapped and tied to the splicer bars.

Bar splicer assemblies shall be epoxy coated according to the requirements for reinforcement bars. See Section 508 of the Standard Specifications.

See approved list of bar splicer assemblies and mechanical splicers for alternatives.

Wang Engineering
wangeng@wangeng.com
1145 N Main Street
Lombard, IL 60148
Telephone: 630 953-9928
Fax: 630 953-9938

BORING LOG 1088-B-01

WEI Job No.: 1100-04-01

Client: AECOM
Project: Circle Interchange Reconstruction
Location: Sections 16 and 17, T39N, R14E of 3rd PM

Datum: NAVD 88
Elevation: 597.11 ft
North: 1897552.19 ft
East: 1171668.11 ft
Station: 7811+69.10
Offset: 02.09 LT

Profile	Elevation (ft)	SOIL AND ROCK DESCRIPTION	Depth (ft)	Sample Type / recovery	Sample No.	SPT Values (blw/6 in)	Qu (tsf)	Moisture Content (%)
	595.8	16-inch thick CONCRETE --PAVEMENT--						
	593.8	Very dense, gray CRUSHED STONE --BASE COURSE--			1	9 21 29	NP	
	591.6	Very dense, brownish gray SILTY LOAM, little gravel --FILL--	5		2	6 15 50/3"	NP	11
		--AUGER REFUSAL--						
		Boring terminated at 5.50 ft	10					
			15					
			20					
			25					

GENERAL NOTES

Begin Drilling 02-17-2013 Complete Drilling 02-17-2013
Drilling Contractor Wang Testing Services Drill Rig D-50 TMR
Driller R&N Logger D.Kolpacki Checked by C. Marin
Drilling Method 2.25" SSA to 5.5, boring backfilled upon completion

WATER LEVEL DATA

While Drilling ▽ DRY
At Completion of Drilling ▼ DRY
Time After Drilling NA
Depth to Water ▽ NA

The stratification lines represent the approximate boundary between soil types; the actual transition may be gradual.

Wang Engineering
wangeng@wangeng.com
1145 N Main Street
Lombard, IL 60148
Telephone: 630 953-9928
Fax: 630 953-9938

BORING LOG 1088-B-02

WEI Job No.: 1100-04-01

Client: AECOM
Project: Circle Interchange Reconstruction
Location: Sections 16 and 17, T39N, R14E of 3rd PM

Datum: NAVD 88
Elevation: 582.09 ft
North: 1897500.54 ft
East: 1171752.80 ft
Station: 7812+52.80
Offset: 51.02 RT

Profile	Elevation (ft)	SOIL AND ROCK DESCRIPTION	Depth (ft)	Sample Type / recovery	Sample No.	SPT Values (blw/6 in)	Qu (tsf)	Moisture Content (%)
	580.8	15-inch thick CONCRETE --PAVEMENT--						
	580.7	2-inch thick ASPHALT --PAVEMENT--			1	19 14 11	NP	11
	578.9	Medium dense CRUSHED STONE --FILL--						
		Medium stiff, gray SILTY CLAY LOAM, trace gravel	5		2	1 1 0	0.57 B	24
	576.6	Very soft to medium stiff, gray CLAY to SILTY CLAY						
					3	0 0 1	0.41 B	28
			10		4	2 2 2	0.16 B	28
					5	1 2 1	0.25 B	25
			15		6	1 1 3	0.33 B	26
					7	0 2 2	0.41 B	26
			20		8	0 1 1	0.25 B	27
					9	0 1 1	0.25 B	26
			25		10	0 0 1	0.33 B	27

Profile	Elevation (ft)	SOIL AND ROCK DESCRIPTION	Depth (ft)	Sample Type / recovery	Sample No.	SPT Values (blw/6 in)	Qu (tsf)	Moisture Content (%)
		--LL(%)=34, PL(%)=15-- --%Gravel=2.0-- --%Sand=15.5-- --%Silt=49.7-- --%Clay=32.8-- --A-6 (14)--						
			30		11	0 0 1	0.16 B	26
					12	0 1 2	0.16 B	28
			35		13	0 2 2	0.57 B	28
	545.1	Stiff, gray SILTY CLAY LOAM, trace gravel						
			40		14	4 4 7	1.15 B	20
	540.1	Hard, gray SILTY CLAY, trace gravel						
			45		15	5 8 25	4.02 B	17
			50		16	15 22 19	4.51 B	15

GENERAL NOTES

Begin Drilling 03-06-2013 Complete Drilling 03-07-2013
Drilling Contractor Wang Testing Services Drill Rig D-50 TMR
Driller R&N Logger A. Happel Checked by C. Marin
Drilling Method 2.25" SSA to 10', Mud Rotary 10' thereafter, boring backfilled upon completion

WATER LEVEL DATA

While Drilling ▽ DRY
At Completion of Drilling ▼ MUD (10')
Time After Drilling NA
Depth to Water ▽ NA

The stratification lines represent the approximate boundary between soil types; the actual transition may be gradual.

Wang Engineering
wangeng@wangeng.com
1145 N Main Street
Lombard, IL 60148
Telephone: 630 953-9928
Fax: 630 953-9938

BORING LOG 1088-B-02

WEI Job No.: 1100-04-01

Client: AECOM
Project: Circle Interchange Reconstruction
Location: Sections 16 and 17, T39N, R14E of 3rd PM

Datum: NAVD 88
Elevation: 582.09 ft
North: 1897500.54 ft
East: 1171752.80 ft
Station: 7812+52.80
Offset: 51.02 RT

Profile	Elevation (ft)	SOIL AND ROCK DESCRIPTION	Depth (ft)	Sample Type / recovery	Sample No.	SPT Values (blw/6 in)	Qu (tsf)	Moisture Content (%)
			55		17	6 12 19	4.02 B	21
	525.1	Medium stiff, gray SILTY CLAY LOAM						
			60		18	7 6 7	0.98 B	28
	520.1	Dense, gray SILTY LOAM, trace gravel						
			65		19	8 13 23	NP	23
	515.1	Gray DOLOSTONE fragments with some SILTY CLAY Run#1 : 67 to 77 feet --RECOVERY=10% --RQD=0%	70	CORE	1			
			75					

Profile	Elevation (ft)	SOIL AND ROCK DESCRIPTION	Depth (ft)	Sample Type / recovery	Sample No.	SPT Values (blw/6 in)	Qu (tsf)	Moisture Content (%)
		Run#2 : 77 to 86 feet --RECOVERY=14% --RQD=5%	80	CORE	2			
			85					
		--AUGER REFUSAL--						
	492.6	Strong, excellent rock quality, light gray, fresh, slightly fractured, joint breaks with little to no infill, slightly vuggy DOLOSTONE Run#3 : 89.5 to 99.5 feet --RECOVERY=100% --RQD=95%	90	CORE	3			
		ROCK MASS RATING: Strength of rock material = 12 Drill core quality RQD = 20 Spacing of joints = 20 Condition of joints =20 Groundwater condition =10	95					
	482.6	Boring terminated at 99.50 ft	100					

GENERAL NOTES

Begin Drilling 03-06-2013 Complete Drilling 03-07-2013
Drilling Contractor Wang Testing Services Drill Rig D-50 TMR
Driller R&N Logger A. Happel Checked by C. Marin
Drilling Method 2.25" SSA to 10', Mud Rotary 10' thereafter, boring backfilled upon completion

WATER LEVEL DATA

While Drilling ▽ DRY
At Completion of Drilling ▼ MUD (10')
Time After Drilling NA
Depth to Water ▽ NA

The stratification lines represent the approximate boundary between soil types; the actual transition may be gradual.

Wang Engineering
wangeng@wangeng.com
1145 N Main Street
Lombard, IL 60148
Telephone: 630 953-9928
Fax: 630 953-9938

BORING LOG 1088-B-03

WEI Job No.: 1100-04-01

Client: AECOM
Project: Circle Interchange Reconstruction
Location: Sections 16 and 17, T39N, R14E of 3rd PM

Datum: NAVD 88
Elevation: 595.88 ft
North: 1897606.49 ft
East: 1171911.19 ft
Station: 7814+13.37
Offset: 50.01 LT

Profile	Elevation (ft)	SOIL AND ROCK DESCRIPTION	Depth (ft)	Sample Type / recovery	Sample No.	SPT Values (blw/6 in)	Qu (tsf)	Moisture Content (%)
	595.1	10-inch thick, CONCRETE --PAVEMENT--						
		--DRILL WITHOUT SAMPLING FROM 0 to 51'--						
			5					
			10					
			15					
			20					
			25					
			30					
			35					
			40					
			45					
			50					

GENERAL NOTES

Begin Drilling: 03-16-2013 Complete Drilling: 03-16-2013
Drilling Contractor: Wang Testing Services Drill Rig: CME-55 TMR
Driller: P&N Logger: F. Bozga Checked by: C. Marin
Drilling Method: 2.25" SSA to 15', Mud Rotary 15' thereafter, boring backfilled upon completion

WATER LEVEL DATA

While Drilling: ▽ DRY
At Completion of Drilling: ▼ MUD (15')
Time After Drilling: NA
Depth to Water: ▽ NA

The stratification lines represent the approximate boundary between soil types; the actual transition may be gradual.

Wang Engineering
wangeng@wangeng.com
1145 N Main Street
Lombard, IL 60148
Telephone: 630 953-9928
Fax: 630 953-9938

BORING LOG 1088-B-03

WEI Job No.: 1100-04-01

Client: AECOM
Project: Circle Interchange Reconstruction
Location: Sections 16 and 17, T39N, R14E of 3rd PM

Datum: NAVD 88
Elevation: 595.88 ft
North: 1897606.49 ft
East: 1171911.19 ft
Station: 7814+13.37
Offset: 50.01 LT

Profile	Elevation (ft)	SOIL AND ROCK DESCRIPTION	Depth (ft)	Sample Type / recovery	Sample No.	SPT Values (blw/6 in)	Qu (tsf)	Moisture Content (%)
	544.9	Soft to medium stiff, gray CLAY to SILTY CLAY, trace gravel			1	2 4 5	0.41 B	26
			55		2	2 4 5	0.57 B	27
	540.4	Soft to hard, gray SILTY CLAY to SILTY CLAY LOAM, trace gravel			3	3 3 6	0.41 B	18
			60		4	9 10 15	4.43 B	19
			65		5	6 10 15	4.02 B	18
			70		6	10 16 18	6.89 B	12
			75		7	9 16 23	8.53 B	13
	527.9	Gray GRAVELLY SAND						
	526.6	Very stiff to hard, gray SILTY CLAY to SILTY CLAY LOAM, trace gravel			8	13 18 15	5.49 B	14
					9	6 12 17	4.43 B	19
					10	5 8 16	2.95 B	19
	518.9	Medium dense to very dense, gray SILTY LOAM, trace gravel						
			80		11	5 6 8	NA	
			85		12	7 7 12	NP	18
		--Hard drilling--						
			90		13	43 50/4	NP	17
		--Hard drilling--						
	501.9	Very dense, gray GRAVELLY SANDY LOAM, some dolostone fragments --Hard drilling 94' to 100.5'--	95		14	17 50/2	NP	16
			100		15	50/2		

GENERAL NOTES

Begin Drilling: 03-16-2013 Complete Drilling: 03-16-2013
Drilling Contractor: Wang Testing Services Drill Rig: CME-55 TMR
Driller: P&N Logger: F. Bozga Checked by: C. Marin
Drilling Method: 2.25" SSA to 15', Mud Rotary 15' thereafter, boring backfilled upon completion

WATER LEVEL DATA

While Drilling: ▽ DRY
At Completion of Drilling: ▼ MUD (15')
Time After Drilling: NA
Depth to Water: ▽ NA

The stratification lines represent the approximate boundary between soil types; the actual transition may be gradual.

Wang Engineering
wangeng@wangeng.com
1145 N Main Street
Lombard, IL 60148
Telephone: 630 953-9928
Fax: 630 953-9938

BORING LOG 1088-B-03

WEI Job No.: 1100-04-01

Client: AECOM
Project: Circle Interchange Reconstruction
Location: Sections 16 and 17, T39N, R14E of 3rd PM

Datum: NAVD 88
Elevation: 595.88 ft
North: 1897606.49 ft
East: 1171911.19 ft
Station: 7814+13.37
Offset: 50.01 LT

Profile	Elevation (ft)	SOIL AND ROCK DESCRIPTION	Depth (ft)	Sample Type / recovery	Sample No.	SPT Values (blw/6 in)	Qu (tsf)	Moisture Content (%)
	495.4	Boring terminated at 100.50 ft						
			105					
			110					
			115					
			120					
			125					

GENERAL NOTES

Begin Drilling: 03-16-2013 Complete Drilling: 03-16-2013
Drilling Contractor: Wang Testing Services Drill Rig: CME-55 TMR
Driller: P&N Logger: F. Bozga Checked by: C. Marin
Drilling Method: 2.25" SSA to 15', Mud Rotary 15' thereafter, boring backfilled upon completion

WATER LEVEL DATA

While Drilling: ▽ DRY
At Completion of Drilling: ▼ MUD (15')
Time After Drilling: NA
Depth to Water: ▽ NA

The stratification lines represent the approximate boundary between soil types; the actual transition may be gradual.

WANGENGINC 11100401.GPJ WANGENGINC.GDT 4/5/13

Wang Engineering
wangeng@wangeng.com
1145 N Main Street
Lombard, IL 60148
Telephone: 630 953-9928
Fax: 630 953-9938

BORING LOG 1087-B-03

WEI Job No.: 1100-04-01

Client: AECOM
Project: Circle Interchange Reconstruction
Location: Sections 16 and 17, T39N, R14E of 3rd PM

Datum: NAVD 88
Elevation: 596.41 ft
North: 1897526.93 ft
East: 1171579.56 ft
Station: 7811+18.84
Offset: 5.33 RT

Elevation (ft)	SOIL AND ROCK DESCRIPTION
595.6	10.25-inch thick CONCRETE --PAVEMENT--
	Gray CRUSHED STONE --BASE COURSE--
593.7	Medium dense, brown and gray, fine SAND to SANDY LOAM, little gravel and brick fragments --FILL--
583.4	Medium stiff to very stiff, gray SILTY CLAY, trace gravel
573.4	Soft to medium stiff, gray CLAY to SILTY CLAY, trace gravel

Depth (ft)	Sample Type	Sample No.	SPT Values (blw/6 in)	Qu (tsf)	Moisture Content (%)
	PUSH	1		NP	
	PUSH	2		NP	12
5	PUSH	3		NP	15
	PUSH	4		NP	11
10	PUSH	5		NP	14
		6	3 8 2	NP	22
15		7	3 4 4	3.03 B	25
		8	2 2 5	2.05 B	24
20		9	2 3 3	0.90 B	26
		10	1 4 3	0.90 B	26
25		11	2 1 3	0.67 H/6	
		12	2 2 2	0.41 B	22
30		13	1 2 3	0.41 B	21
35		14	0 0 0	0.25 B	26
40		15	1 2 2	0.25 B	25
45		16	0 1 3	0.41 B	27
50		17	1 2 2	0.57 B	27

GENERAL NOTES

Begin Drilling: 03-21-2013 Complete Drilling: 03-22-2013
Drilling Contractor: Wang Testing Services Drill Rig: D-50 TMR
Driller: R&T Logger: D. Kolpacki Checked by: C. Marin
Drilling Method: 1.0" IDA Geoprobe to 11', 2.25" SSA 11' to 20', Mud Rotary 20' thereafter

WATER LEVEL DATA

While Drilling: DRY
At Completion of Drilling: DRY
Time After Drilling: NA
Depth to Water: NA

The stratification lines represent the approximate boundary between soil types; the actual transition may be gradual.

Wang Engineering
wangeng@wangeng.com
1145 N Main Street
Lombard, IL 60148
Telephone: 630 953-9928
Fax: 630 953-9938

BORING LOG 1087-B-03

WEI Job No.: 1100-04-01

Client: AECOM
Project: Circle Interchange Reconstruction
Location: Sections 16 and 17, T39N, R14E of 3rd PM

Datum: NAVD 88
Elevation: 596.41 ft
North: 1897526.93 ft
East: 1171579.56 ft
Station: 7811+18.84
Offset: 5.33 RT

Elevation (ft)	SOIL AND ROCK DESCRIPTION
539.7	Very stiff to hard, gray SILTY LOAM to SILTY CLAY LOAM, trace gravel and sand seams
529.7	Medium stiff to hard, gray CLAY to SILTY CLAY, trace gravel and seams of sand
514.7	Very dense, gray SANDY LOAM, some gravel
509.7	Hard, gray SILTY LOAM, trace gravel
496.4	Boring terminated at 100.00 ft

Depth (ft)	Sample Type	Sample No.	SPT Values (blw/6 in)	Qu (tsf)	Moisture Content (%)
55		18	0 2 4	0.33 B	24
60		19	7 10 11	3.69 S	14
65		20	9 11 18	5.58 B	17
70		21	8 12 17	4.67 B	21
75		22	3 5 6	1.56 B	25
80		23	3 4 6	0.66 B	39
85		24	16 50/3	NP	17
90		25	33 46 50/4	8.61 S	12
95		26	19 20 50/3	7.38 S	15
100		27	50/4	> 4.50 P	13

GENERAL NOTES

Begin Drilling: 03-21-2013 Complete Drilling: 03-22-2013
Drilling Contractor: Wang Testing Services Drill Rig: D-50 TMR
Driller: R&T Logger: D. Kolpacki Checked by: C. Marin
Drilling Method: 1.0" IDA Geoprobe to 11', 2.25" SSA 11' to 20', Mud Rotary 20' thereafter

WATER LEVEL DATA

While Drilling: DRY
At Completion of Drilling: DRY
Time After Drilling: NA
Depth to Water: NA

The stratification lines represent the approximate boundary between soil types; the actual transition may be gradual.

WANGENG.GDT 4/5/13 WANGENG 1100401.GPJ

REVISIONS				
ZONE	REV	DESCRIPTION	DATE	APPROVED

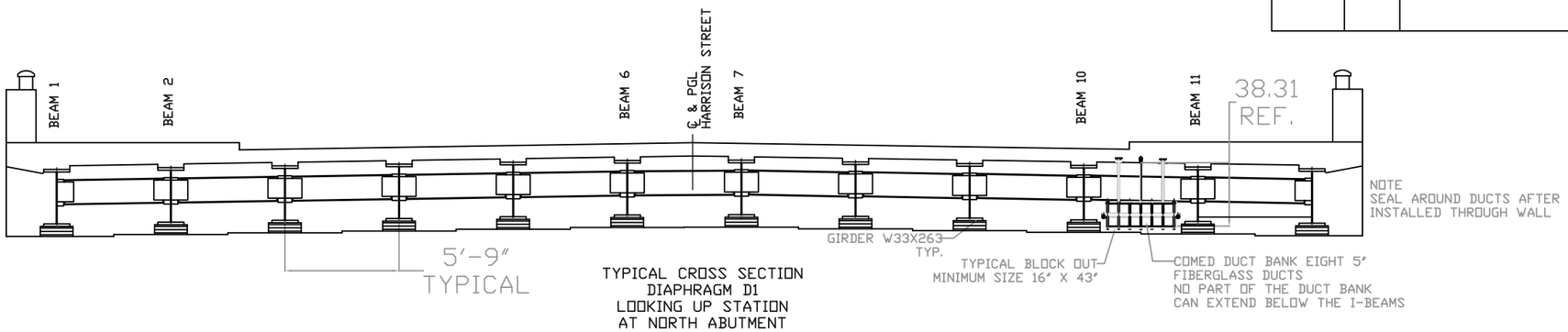

NOTE
SEAL AROUND DUCTS AFTER INSTALLED THROUGH WALL

TYPICAL CROSS SECTION
DIAPHRAGM D1
LOOKING UP STATION
AT NORTH ABUTMENT

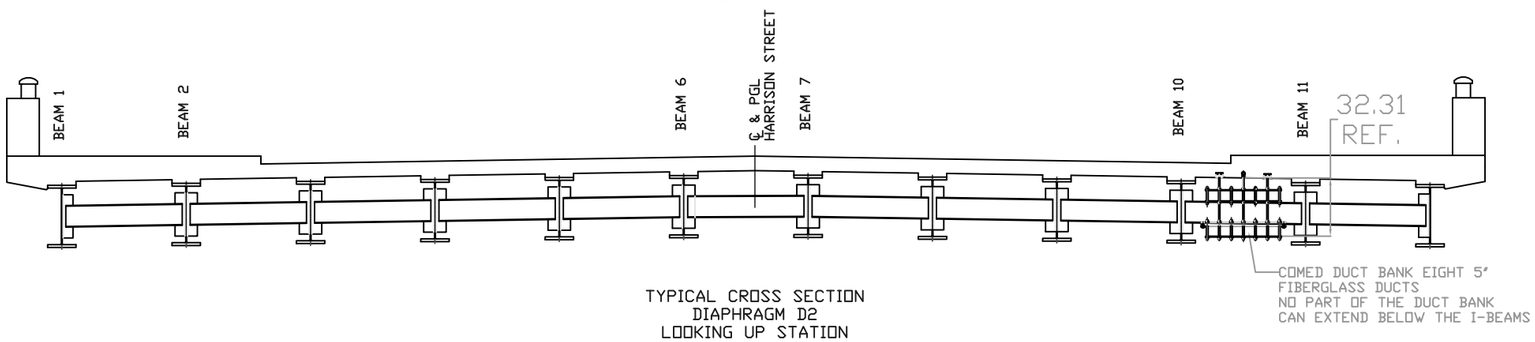

TYPICAL CROSS SECTION
DIAPHRAGM D2
LOOKING UP STATION

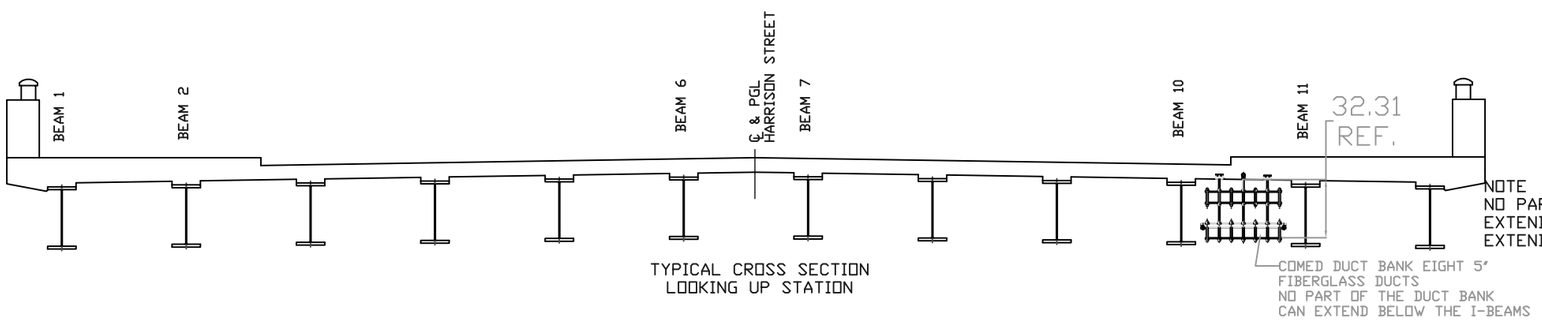

TYPICAL CROSS SECTION
LOOKING UP STATION

FOR INFORMATION ONLY
WORK TO BE PERFORMED BY OTHERS
WITH THE EXCEPTION OF PLACEMENT
OF INSERTS INTO SUPERSTRUCTURE

NOTE
NO PART OF THE CONDUIT SUPPORT HANGER CAN EXTEND BELOW THE BRIDGE DECK GIRDER
EXTENDED RODS MAY NEED TO BE ALTERED

Note:
ALL MEASUREMENTS ARE IN INCHES UNLESS NOTED OTHERWISE

DRAWING APPROVAL
I _____
APPROVE THIS DRAWING FOR MANUFACTURING
DATE: _____

Bridge Deck Cross Section

CONDUX INTERNATIONAL, INC.
MANKATO MN
PH. 800-533-2077

Project: Com Ed
Harrison Street East Bridge over F.A.I. RTE NB
90-94 Dan Ryan Expressway, Cook County Illinois

WEIGHT: 0.0 LBS EA

QUOTE NO. 3985218599

SIZE	FSCM NO.	DWG NO.	REV
		TBA	0.0
		SHEET: CONDUX 1 OF 3	
SCALE 1/2	DATE: 12-09-2013	SHEET 140 OF 256	

REVISIONS				
ZONE	REV	DESCRIPTION	DATE	APPROVED

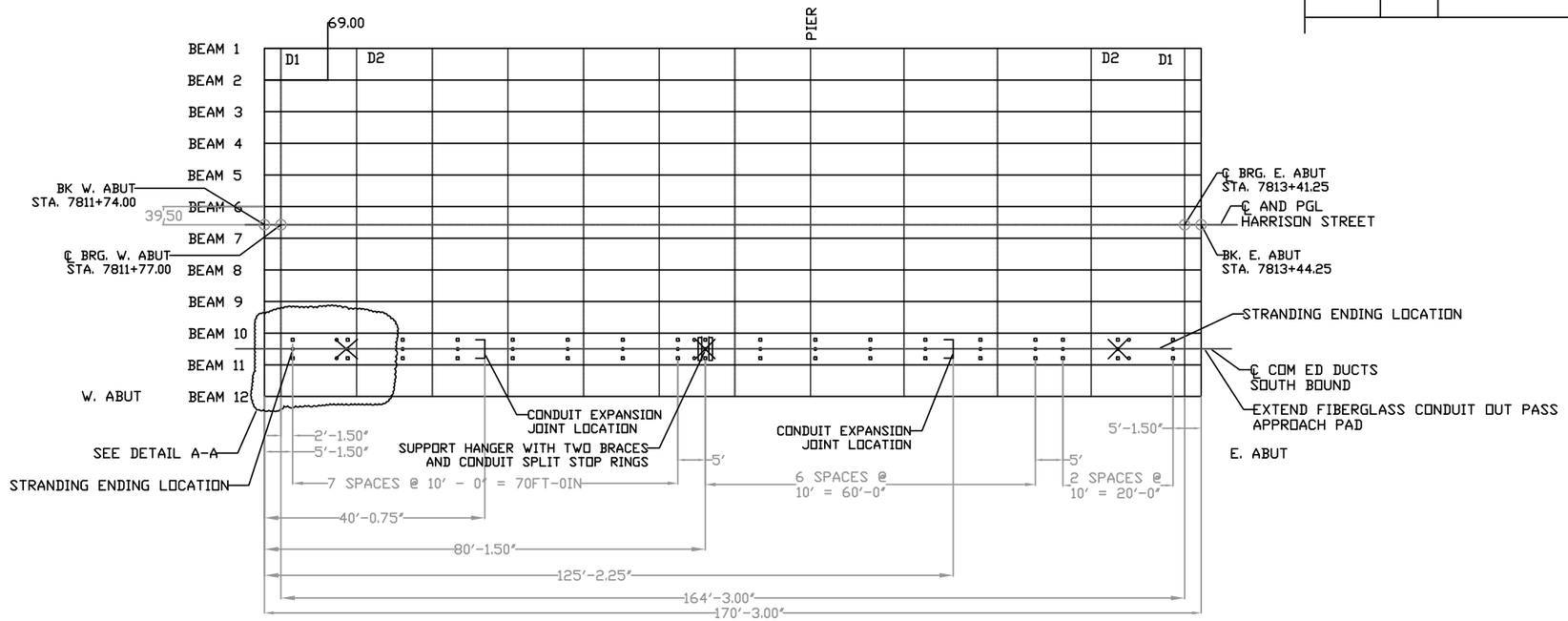

SUPPORT HANGER AND
CONDUIT LAYOUT

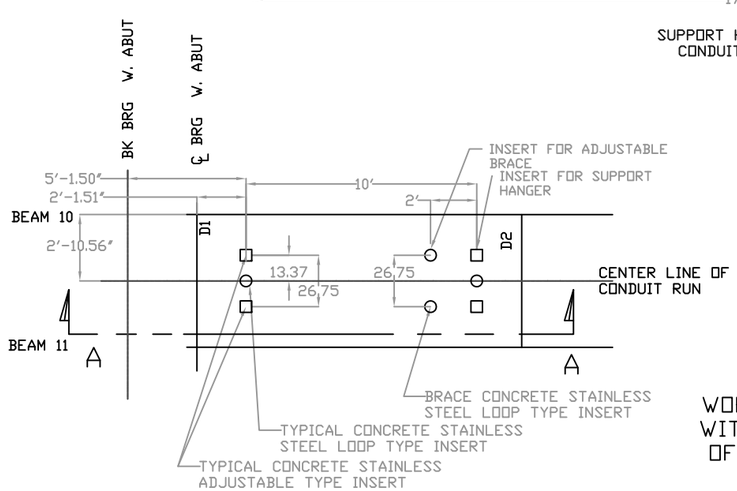

DETAIL A-A
CONCRETE INSERT LAYOUT DETAIL
SCALE 4:1

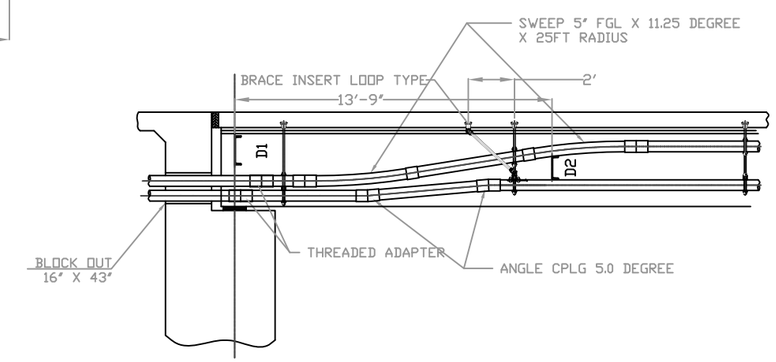

SECTION A-A

FOR INFORMATION ONLY
WORK TO BE PERFORMED BY OTHERS
WITH THE EXCEPTION OF PLACEMENT
OF INSERTS INTO SUPERSTRUCTURE

Note:
ALL MEASUREMENTS ARE IN INCHES UNLESS NOTED OTHERWISE

DRAWING APPROVAL
I _____
APPROVE THIS DRAWING FOR MANUFACTURING
DATE: _____

CONDUIT SUPPORT AND CONDUIT LAYOUT	CONDUX INTERNATIONAL, INC. MANKATO MN PH. 800-533-2077			
	Project: ComEd Harrison Street East Bridge over F.A.I. RTE NB 90/94 Dan Ryan Expressway, Cook County Illinois			
WEIGHT: 0.0 LBS EA	SIZE	FSCM NO.	DWG NO. TBA	REV 0.0
			SHEET: CONDUX 2 OF 3	
QUOTE NO. 3985218599	SCALE 1/2	DATE: 12-09-2013	SHEET 141 OF 256	

REVISIONS				
ZONE	REV	DESCRIPTION	DATE	APPROVED

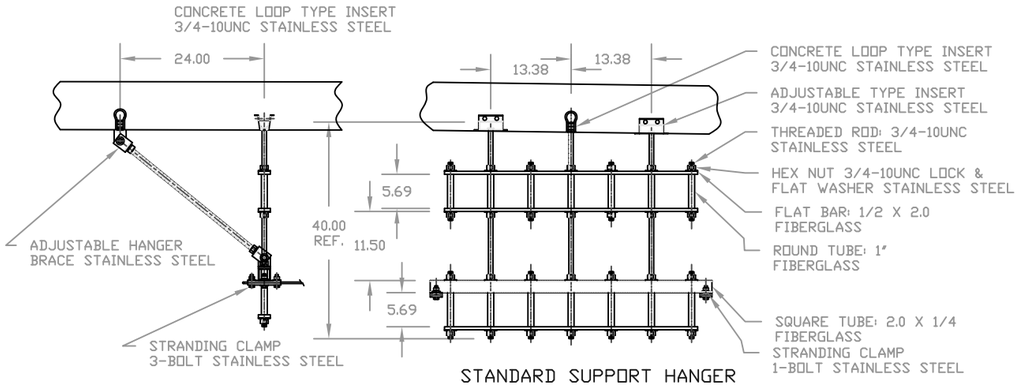

STANDARD SUPPORT HANGER
WITH STRANDING CLAMPS

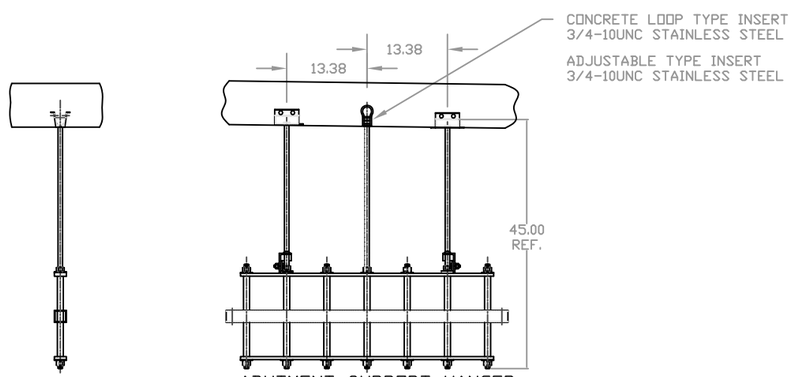

ABUTMENT SUPPORT HANGER
WITH STRANDING CLAMPS
AND BRACING

FOR INFORMATION ONLY
WORK TO BE PERFORMED BY OTHERS
WITH THE EXCEPTION OF PLACEMENT
OF INSERTS INTO SUPERSTRUCTURE

NOTE
NO PART OF THE CONDUIT SUPPORT HANGER
CAN EXTEND BELOW THE BRIDGE DECK
GIRDER
EXTENDED RODS MAY NEED TO BE ALTERED

CURRENT BILL OF MATERIAL

ITEM NO.	PART NO.	DESCRIPTION	QTY	UNIT
1	26125F3S24	ABUTMENT CONDUIT SUPPORT HANGER: 2 HIGH X 6 WIDE FIBERGLASS AND STAINLESS STEEL, OPENING FOR EIGHT 5" FGL DUCTS THREADED RODS THREE @ 3/4-10UNC X 45.00 LONG	2	EA.
2	TBA	STANDARD CONDUIT SUPPORT HANGER: 2 HIGH X 6 WIDE FIBERGLASS AND STAINLESS STEEL, OPENING FOR EIGHT 5" FGL DUCTS THREADED RODS THREE @ 3/4-10UNC X 40.00 LONG	16	EA.
3	08610236	HANGER BRACE ADJUSTABLE: 36 INCH STAINLESS STEEL	6	EA.
4	08409990	CONCRETE INSERT: 3/4-10 LOOP TYPE, STAINLESS STEEL	24	EA.
5	08558300	CONCRETE INSERT SETTING PLUG: 3/4-10	24	EA.
6	TBA	CONCRETE INSERT ADJUSTABLE: 3/4-10 STAINLESS STEEL	36	EA.
7	08408950	STRANDING WIRE: ¼ X 500 FT., STAINLESS STEEL	2	EA.
8	08409404	GUY STRAND CLAMP: 3-BOLT, STAINLESS STEEL	6	EA.
9	08409504	GUY STRAND CLAMP: 1-BOLT, STAINLESS STEEL	26	EA.
10	08460053	CONDUIT FIBERGLASS: 5" IPS, MW (5.57 O.D. X .096 WALL) MEETING NEMA TC-14A	1440	FT.
11	08460153	CONDUIT STOP COUPLING: 5" IPS MW	40	EA.
12	08460453	CONDUIT EXPANSION JOINT O-RING TYPE: 5" IPS MW	16	EA.
13	08460953	CONDUIT SPLIT STOP RING: 5" IPS MW	16	EA.
14	08461553	CONDUIT ADAPTER: 5" IPS MW TO 5" GRC	16	EA.
15	TBA	CONDUIT SWEEP: 5" IPS MW 11.25 DEGREE X 25FT RADIUS	16	EA.
16	08460253	CONDUIT 5 DEG. ANGLE COUPLING: 5" IPS MW	16	EA.
17	08463402	CONDUIT EPOXY ADHESIVE CARTRIDGE:	20	EA.
18	02288990	CONDUIT EPOXY ADHESIVE GUN	1	EA.

General Construction, Hanger and Conduit Notes
1.0 Recommended spacing between Support is 10 foot.
2.0 Support Hanger Material shall be manufactured using 316 stainless steel and fiberglass components.
3.0 Conduit is 5 inch Fiberglass with minimum wall thickness of .096 inch meeting NEMA TC-14A Specs.
4.0 Conduit joints shall be positive locking adhesive bonded bell and spigot.
5.0 Conduit expansion joints shall be sliding sleeve with provision for 8 inch of travel.
6.0 Bridge abutments must have a block out or be sleeved to allow the fiberglass conduit to pass through. After conduit is placed through abutment seal up opening with state approved sealant.
7.0 Place concrete inserts for future support system. Hangers will be installed at a later date.
8.0 Conduit support hangers weight 870.00 LBS total
Fiberglass conduit weight 1915.00 LBS total
cable weight weight 11,710.00 LBS total
Grand total being placed on the bridge is 14,495 LBS.

Condux International, Inc. Support hanger meet the following specifications
Fiberglass items
Flat Bar: ½ x 2.0
Round Tube: 1.0" O.D. .105 wall
Square Tube: 2 x 2 x 1/4
Fiberglass reinforced with polyester resin with surface veil for better weathering, resin shall contains u.v. inhibitor. Fiberglass is made with continuous strand mat and uni-directional roving.
gray in color
Tensile Strength (ASTM D 638) 30,000 PSI
Tensile Modules (ASTM D 638) 2.3E6 PSI
Flexural Strength (ASTM D 790) 30,000 PSI
Flexural Modules (ASTM D 790) 2.3E6 PSI
Compressive Strength (ASTM D 695 20,000 PSI
Compressive Modules 1.4E6 PSI
Yield shear strength 2000 PSI
Barcol hardness 50
Dielectric strength (ASTM D 149) 200 VPM Min.

Stainless steel Hardware Items
Threaded Rod
Threaded rod meets (ASTM/ASME B1.1)
(ASTM A307 Grade A) (Tensile Strength 60,000 PSI)
Hexnut
Hexnut meets (ANSI/ASME B18.2.2)
Material: 316 Stainless steel (ASTM F594)
Flatwasher
Flatwasher meets (ANSI/ASME B18.22.1)
Material: 316 stainless steel (ASTM F436)
Lockwasher
Lockwasher meets (ANSI/ASME B18.21.1)
Material: 316 Stainless steel (ASTM F436)
Stranding Items
Stranding Clamps (1-Bolt & 3-Bolt)
Material: 1/4 x 1.5 (316 Stainless Steel)
Stranding Wire
Cable: ¼" Dia (7 X 19 Steel Aircraft)
304 Stainless Steel
Bracing
Adjustable hanger attachment brackets
Material: angle 2.5 x 2.5 x .25 (316 Stainlss steel)

DRAWING APPROVAL
I _____
APPROVE THIS DRAWING FOR MANUFACTURING
DATE: _____

Note:
ALL MEASUREMENTS ARE IN INCHES UNLESS NOTED OTHERWISE

CONDUIT SUPPORT HANGER DETAIL AND BILL OF MATERIALS

CONDUX INTERNATIONAL, INC.
MANKATO MN
PH. 800-533-2077

Project: Com Ed
Harrison Street East Bridge over F.A.I. RTE NB 90/94 Dan Ryan Expressway, Cook County Illinois

WEIGHT: 0.0 LBS EA

QUOTE NO. 3985218599

SIZE	FSCM NO.	DWG NO.	REV
		TBA	0.0
SCALE 1/2	DATE: 12-09-2013	SHEET: CONDUX 3 OF 3	SHEET 142 OF 256

FOR INFORMATION ONLY

STATE OF ILLINOIS
DEPARTMENT OF TRANSPORTATION
DIVISION OF HIGHWAYS

PLANS FOR PROPOSED FEDERAL AID INTERSTATE HIGHWAY

F.A. RTE.	SECTION	COUNTY	TOTAL SHEETS	SHEET NO.
90/94	4	COOK	151	1

F.A.I.R. 90/94 RANGE 1 PROJECT NUMBER IDR-94-3(268)52

*1985-080 R
P-91-179-86

INDEX OF VOLUMES

VOL. NO.	DESCRIPTION	NO. OF SHEETS
1.	ROADWAY PLANS & GENERAL SHEETS	151
2.	MAINTENANCE OF TRAFFIC & ROADWAY CROSS SECTIONS	81
3.	BRIDGES & ASSOCIATED STRUCTURES	79
4.	RETAINING WALLS	38
5.	ROADWAY LIGHTING & SURVEILLANCE	36
	TOTAL	385

NOTE: FOR INDEX OF SHEETS SEE SHEET NO. 2

SCALES
PLAN — 1 INCH = 50 FEET
PROFILE HORIZ. — 1 INCH = 50 FEET
PROFILE VERT. — 1 INCH = 5 FEET
CROSS SECTIONS — 1 INCH = 10 FEET HORIZONTAL, 1 INCH = 5 FEET VERTICAL

VOLUME NO. 1

F.A.I. ROUTE 90/94 (DAN RYAN EXPRESSWAY)
SECTION 1985 - 080 R
PROJECT IDR-94-3 (268) 52
COOK COUNTY
C-91-433-85

ROADWAY GRADING AND PAVING
MAXWELL STREET TO I-290

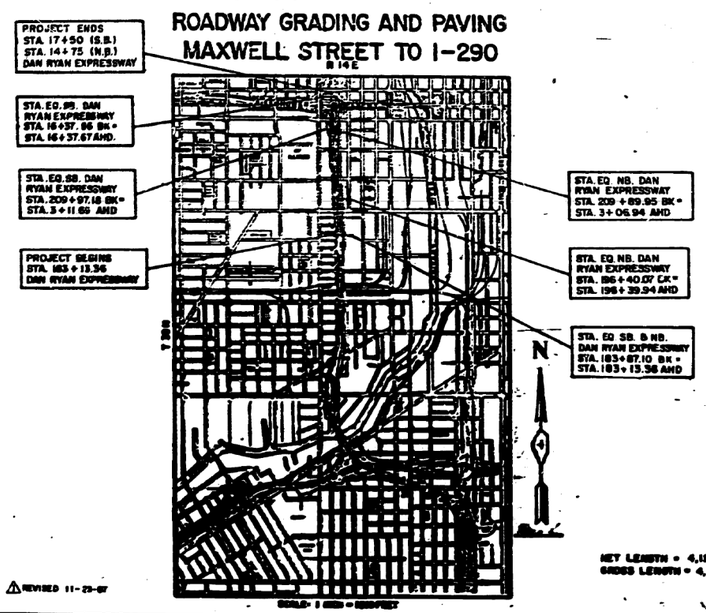

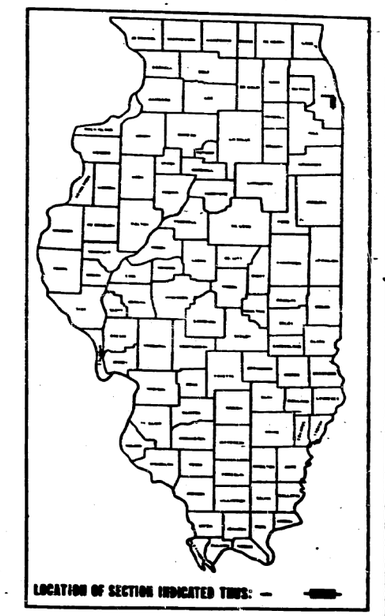

DESIGN DESIGNATION

DAN RYAN EXPRESSWAY (MAINLINE S.B. & N.B.) } 153,700 (2000) TRUNK 118.41 (15" CRPCC - 20) △1
COLLECTOR-DISTRIBUTOR (S.B. & N.B.)

N.B. ROOSEVELT RD./RUBLE ST. }
S.B. ROOSEVELT RD./UNION AVE. } 19,300 (2000) AREA SERVICE 16.08 (12" PCC - 20)
N.B. TAYLOR ST. ENTRANCE RAMP }

& TAYLOR ST. MAINLINE EXIT AND RAMP W-S } 7,700 (2000) AREA SERVICE 4.67 (10" PCC - 20)

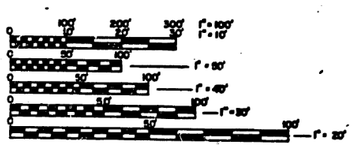

FULL SIZE PLANS HAVE BEEN PREPARED USING STANDARD ENGINEERING SCALES, REDUCED SIZED PLANS WILL NOT CONFORM TO STANDARD SCALES, IN MAKING MEASUREMENTS ON REDUCED PLANS, THE ABOVE SCALES MAY BE USED.

CONTRACT NO. 80063

△1 REVISED 11-23-87

NET LENGTH = 4,122.32 LIN. FT. (0.78 MILES)
GROSS LENGTH = 4,122.32 LIN. FT. (0.78 MILES)

THOMAS ALLAN SMITH 37266 REGISTERED PROFESSIONAL ENGINEER OF ILLINOIS
8-13-87

STATE OF ILLINOIS
DEPARTMENT OF TRANSPORTATION
DIVISION OF HIGHWAYS
SUBMITTED August 19 1982
RECOMMENDED 11-20 1987
PASSED 10-20-87
APPROVED 11-20 1987

DEPARTMENT OF TRANSPORTATION
FEDERAL HIGHWAY ADMINISTRATION
DIVISION ADMINISTRATOR — DATE

COUNTY COOK SECTION 1985 - 080 R ROUTE I 90/94 (DAN RYAN EXPRESSWAY)

CONSULTANT SECTION ENGINEER K. HEMSTREET / ILHDB 312 705-4800

D160W71-sht-AS-BUILT-01.dgn

USER NAME = dunkerleyb	DESIGNED -	REVISED
	CHECKED -	REVISED
PLOT SCALE = N.T.S.	DRAWN -	REVISED
PLOT DATE = 11/26/2013	CHECKED -	REVISED

STATE OF ILLINOIS
DEPARTMENT OF TRANSPORTATION

EXISTING AS-BUILTS SN 016-1088

SHEET NO. AS-01 OF AS-72 SHEETS

F.A.I. RTE.	SECTION	COUNTY	TOTAL SHEETS	SHEET NO.
90/94/290	2013-036R	COOK	256	143
		CONTRACT NO. 60W71		
		ILLINOIS FED. AID PROJECT -NUMBER-		

FOR INFORMATION ONLY

STATE OF ILLINOIS
DEPARTMENT OF TRANSPORTATION
DIVISION OF HIGHWAYS

F.A. RTE.	SECTION	COUNTY	TOTAL SHEETS	SHEET NO.
90/94	-	COOK	79	1

* 1985-080 R
P-91-179-84

INDEX OF VOLUMES

VOL. NO.	DESCRIPTION	NO. OF SHEETS
1.	ROADWAY PLANS & GENERAL SHEETS	151
2.	MAINTENANCE OF TRAFFIC & ROADWAY CROSS SECTIONS	81 △
3.	BRIDGES & ASSOCIATED STRUCTURES	79
4.	RETAINING WALLS AND MISC. STRUCTURES	38
5.	ROADWAY LIGHTING & SURVEILLANCE	36
	TOTAL	386

PLANS FOR PROPOSED FEDERAL AID INTERSTATE HIGHWAY

SCALES
- PLAN: 1 INCH = 50 FEET
- PROFILE HORIZ.: 1 INCH = 50 FEET
- PROFILE VERT.: 1 INCH = 5 FEET
- CROSS SECTIONS: 1 INCH = 10 FEET HORIZONTAL; 1 INCH = 5 FEET VERTICAL

VOLUME NO. 3

F.A.I. ROUTE 90/94 (DAN RYAN EXPRESSWAY)

SECTION 1985 - 080 R

~~PROJECT~~

COOK COUNTY

C-91-433-85

ROADWAY GRADING AND PAVING
MAXWELL STREET TO I-290

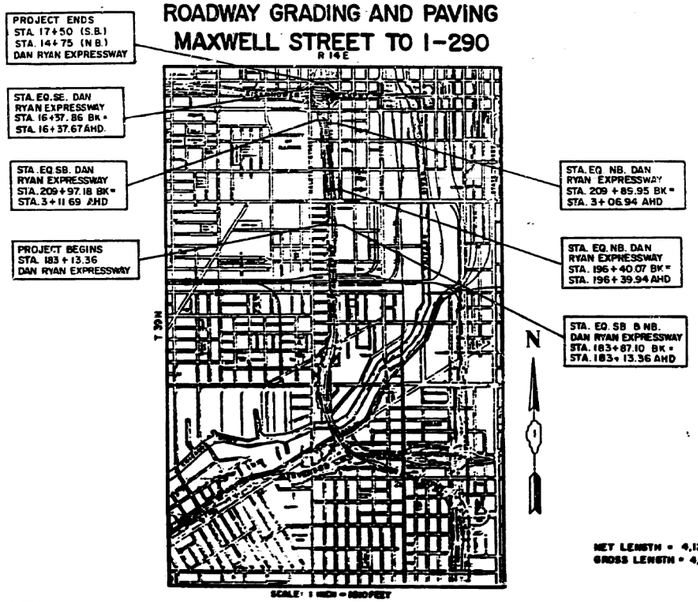

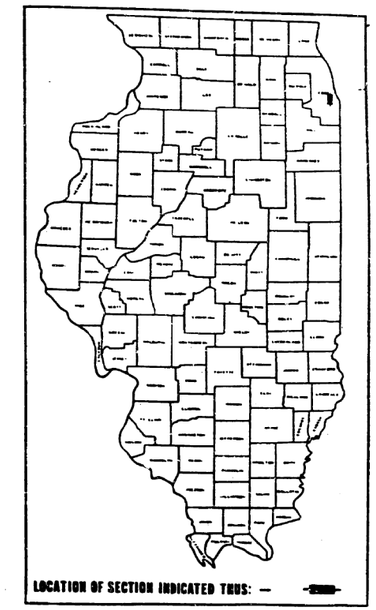

DESIGN DESIGNATION

DAN RYAN EXPRESSWAY (MAINLINE S.B. & N.B.) 163,700 (2000) TRUNK 118.41 (13" CRPCC - 20)

COLLECTOR-DISTRIBUTOR (S.B. & N.B.) 28,100 (2000) COLLECTOR 21.63 (13" CRPCC - 20)

N.B. ROOSEVELT RD./RUBLE ST.
S.B. ROOSEVELT RD./UNION AVE.
N.B. TAYLOR ST. ENTRANCE RAMP } 19,300 (2000) AREA SERVICE 16.08 (12" PCC - 20)

TAYLOR ST. MAINLINE EXIT AND RAMP W-5 } 7,700 (2000) AREA SERVICE 4.67 (10" PCC - 20)

FULL SIZE PLANS HAVE BEEN PREPARED USING STANDARD ENGINEERING SCALES. REDUCED SIZED PLANS WILL NOT CONFORM TO STANDARD SCALES. IN MAKING MEASUREMENTS ON REDUCED PLANS, THE ABOVE SCALES MAY BE USED.

CONTRACT NO. 80063

STATE OF ILLINOIS
DEPARTMENT OF TRANSPORTATION
DIVISION OF HIGHWAYS

SUBMITTED _____ 19__
DISTRICT ENGINEER
EXAMINED _____ 19__
ENGINEER OF PLANS AND CONTRACTS
PASSED _____ 19__
ENGINEER OF HIGHWAY
APPROVED _____ 19__
DIRECTOR ENGINEER OF DIVISION

SHEET G1 OF 2

DEPARTMENT OF TRANSPORTATION
FEDERAL HIGHWAY ADMINISTRATION
DIVISION ENGINEER — DATE

NET LENGTH = 4,122.32 LIN. FT. (0.78 MILES)
GROSS LENGTH = 4,122.52 LIN. FT. (0.78 MILES)

Revision - Nov 23, 1987

CONSULTANT SECTION ENGINEER: K. HEMSTREET / J. KOS 312 705-4269

COUNTY COOK SECTION 1985 - 080 R ROUTE I 90/94 (DAN RYAN EXPRESSWAY)

D160W71-sht-AS-BUILT-02.dgn

USER NAME = dunkerleyb	DESIGNED -	REVISED	
	CHECKED -	REVISED	
PLOT SCALE = N.T.S.	DRAWN -	REVISED	
PLOT DATE = 11/26/2013	CHECKED -	REVISED	

STATE OF ILLINOIS
DEPARTMENT OF TRANSPORTATION

EXISTING AS-BUILTS SN 016-1088

SHEET NO. AS-02 OF AS-72 SHEETS

F.A.I. RTE.	SECTION	COUNTY	TOTAL SHEETS	SHEET NO.
90/94/290	2013-036R	COOK	256	144
		CONTRACT NO. 60W71		
		ILLINOIS FED. AID PROJECT -NUMBER-		

FOR INFORMATION ONLY

ROUTE NO.	SECTION	COUNTY	TOTAL SHEETS	SHEET NO.
90/94	0	COOK	79	2

STA. TO STA.

FED. RD. DIST. NO. | ILLINOIS | FED. AID PROJECT

© 1985-080 R

INDEX OF SHEETS

⚠ TOTAL BILL OF MATERIAL - S.B.

ITEM	UNIT	QUANTITY
STRUCTURE EXCAVATION	CU. YD.	1,258
PROTECTIVE COAT	SQ. YD.	634
CLASS X CONCRETE	CU. YD.	676.9
CLASS X CONCRETE SUPERSTRUCTURE	CU. YD.	509.5
FURNISHING AND ERECTING STRUCTURAL STEEL	L. SUM	0.49
STUD SHEAR CONNECTORS ②	EACH	5,134
REINFORCEMENT BARS	LBS.	53,460
REINFORCEMENT BARS (EPOXY COATED)	LBS.	144,590
BEARING PLATE	EACH	2
FURNISHING STEEL PILES (HP 12 X 53)	LIN. FT.	3,038
TEST PILE (HP 12 X 53)	EACH	4
DRIVING STEEL PILES	LIN. FT.	3,038
CAISSON SHAFTS 42"	CU. FT.	1,328
CAISSON SHAFTS 48"	CU. FT.	855
CAISSON HOLES	CU. FT.	1,207
ELASTOMERIC BEARING ASSEMBLY TYPE II	EACH	20
FLOATING BEARING - GUIDED EXPANSION - 400K	EACH	6
FLOATING BEARING - FIXED - 550K	EACH	1
FLOATING BEARING - FIXED - 1000K	EACH	1
PIPE UNDERDRAIN - 6" DIAMETER	LIN. FT.	949
GEOCOMPOSITE WALL DRAIN	SQ. YD.	375
NEOPRENE EXPANSION JOINT, 4"	LIN. FT.	48
PREFORMED JOINT SEAL, 2-1/2"	LIN. FT.	25
DRAINAGE SCUPPERS	EACH	2
BONDSPOT DRAINAGE SYSTEM	LIN. FT.	94
CONCRETE REMOVAL	CU. YD.	33.0
PROTECTIVE SHIELD	SQ. YD.	65
ELASTOMERIC BEARING ASSEMBLY TYPE I	EACH	12
PEDESTRIAN RAILING - 6 FT.	LIN. FT.	525
PREFORMED JOINT SEAL 4"	LIN. FT.	144

⚠ TOTAL BILL OF MATERIAL - N.B.

ITEM	UNIT	QUANTITY
STRUCTURE EXCAVATION	CU. YD.	2,262
CONCRETE REMOVAL	CU. YD.	179.7
REMOVAL OF EXISTING SUPERSTRUCTURES - NO. 1	L. SUM	1
REMOVAL OF EXISTING SUPERSTRUCTURES - NO. 2	L. SUM	1
PROTECTIVE COAT	SQ. YD.	2,419
PROTECTIVE SHIELD	SQ. YD.	9,620
CLASS X CONCRETE	CU. YD.	1,071.4
CLASS X CONCRETE SUPERSTRUCTURE	CU. YD.	948.0
FURNISHING AND ERECTING STRUCTURAL STEEL	L. SUM	0.57
DRAINAGE SCUPPERS	EACH	2
DOWNSPOUT DRAINAGE SYSTEM	LIN. FT.	33
BITUMINOUS CONCRETE SURFACE COURSE - CLASS I	TON	41
EPOXY CRACK SEALING	LIN. FT.	20
FORMED CONCRETE REPAIR (DEPTH ≤ 1-1/2 IN.)	SQ. FT.	150
STUD SHEAR CONNECTORS	EACH	12,616
REINFORCEMENT BARS	LBS.	168,890
REINFORCEMENT BARS (EPOXY COATED)	LBS.	211,710
BEARING PLATE	EACH	9
ELASTOMERIC BEARING ASSEMBLY TYPE I	EACH	46
ELASTOMERIC BEARING ASSEMBLY TYPE II	EACH	9
FLOATING BEARING, EXPANSION - 300K	EACH	1
FLOATING BEARING, EXPANSION - 600K	EACH	1
FLOATING BEARING, GUIDED EXPANSION - 350K	EACH	2
FLOATING BEARING, GUIDED EXPANSION - 500K	EACH	2
FLOATING BEARING, FIXED - 350K	EACH	2
FURNISHING STEEL PILES (HP 12 X 53)	LIN. FT.	3,116
TEST PILE (HP 12 X 53)	EACH	2
DRIVING STEEL PILES	LIN. FT.	3,116
CAISSON SHAFTS 36"	CU. FT.	4,931
CAISSON SHAFTS 48"	CU. FT.	1,395
CAISSON HOLES	CU. FT.	2,949
WATERPROOFING MEMBRANE SYSTEM	SQ. YD.	476
EXPANSION BOLTS, 3/4" DIAMETER	EACH	367
PEDESTRIAN RAILING - 6'	LIN. FT.	964
GEOCOMPOSITE WALL DRAIN	SQ. YD.	335
PIPE UNDERDRAIN - 6" DIAMETER	LIN. FT.	644
NEOPRENE EXPANSION JOINT 4"	LIN. FT.	88
PREFORMED JOINT SEAL 2-1/2"	LIN. FT.	180
PREFORMED JOINT SEAL 4"	LIN. FT.	71

⚠ TOTAL BILL OF MATERIALS - S.B. (CONT.)

ITEM	UNIT	QUANTITY
PLASTICIZED BRIDGE DECK CONCRETE OVERLAY	SQ. YD.	1,311
BITUMINOUS CONCRETE SURFACE REMOVAL	SQ. YD.	1,311
CONCRETE BRIDGE DECK SCARIFICATION (3/8")	SQ. YD.	1,390
BARRIER REMOVAL	LIN. FT.	525
DECK SLAB REPAIR (PARTIAL)	SQ. YD.	60
DECK SLAB REPAIR (FULL DEPTH, TYPE I)	SQ. YD.	10
BRIDGE SIDEWALK REPAIR (PARTIAL DEPTH)	SQ. FT.	500
BRIDGE SIDEWALK REPAIR (FULL DEPTH)	SQ. FT.	60
FORMED CONCRETE REPAIR (DEPTH > 1-1/2 IN.)	SQ. FT.	20
EPOXY CRACK SEALING	LIN. FT.	86
FORMED CONCRETE REPAIR (DEPTH ≤ 1-1/2 IN.)	SQ. FT.	320
CLEANING AND PAINTING	L. SUM	1

SHEET G2 OF 2

REVISIONS	
Name	Date
⚠ Revision	2-2-88

⚠ Revision - Nov. 23, 1987

STATE OF ILLINOIS
DEPARTMENT OF TRANSPORTATION
F.A.I. ROUTE 90/94 (DAN RYAN EXPRESSWAY)
SECTION (0)0-080 R - COOK COUNTY
ROADWAY GRADES AND PAVING
VOLUME NO. 3
INDEX OF SHEETS
AND TOTAL BILL OF MATERIAL

Scale: NONE | Drawn By: SAP
Date: AUGUST 14, 1987 | Checked By: MPM

BURGSTONE ENGINEERING INC.
Chicago, Illinois

D160W71-sht-AS-BUILT-03.dgn

USER NAME = dunkerleyb	DESIGNED -	REVISED
	CHECKED -	REVISED
PLOT SCALE = N.T.S.	DRAWN -	REVISED
PLOT DATE = 11/26/2013	CHECKED -	REVISED

STATE OF ILLINOIS
DEPARTMENT OF TRANSPORTATION

EXISTING AS-BUILTS SN 016-1088

SHEET NO. AS-03 OF AS-72 SHEETS

F.A.I. RTE.	SECTION	COUNTY	TOTAL SHEETS	SHEET NO.
90/94/290	2013-036R	COOK	256	145

CONTRACT NO. 60W71

ILLINOIS FED. AID PROJECT -NUMBER-

FOR INFORMATION ONLY

BENCH MARK:
Mark cut in ledge of brick building on Union Avenue and Roosevelt Road, City of Chicago Bench Mark No. 4617 El. 17.55

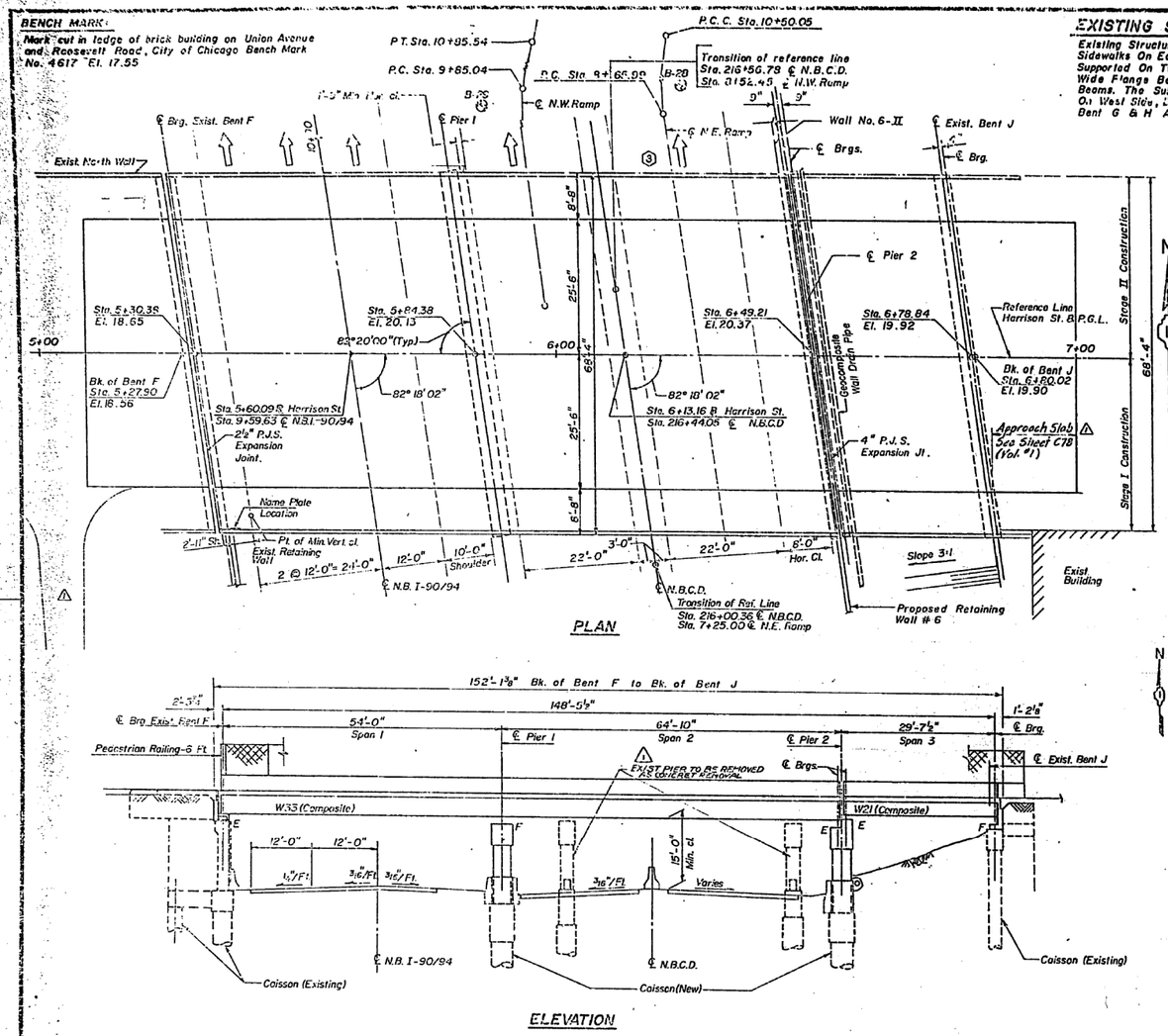

PLAN

ELEVATION

EXISTING STRUCTURE

Existing Structure No. 016-1088 is 68'-4" Wide With 6'-8" Sidewalks On Each Side. The Deck Is A Concrete Slab Supported On Two Span 66'-10½" & 40'-9" Continuous Steel Wide Flange Beams And A 40'-0" Single Span Concrete Beams. The Substructure Consists Of A Closed Abutment On West Side, Bent F, Two Multi-Pile Column Concrete Center Bent G & H And A Capped Abutment On East Side, Bent J

FILE NAME	STATION	COUNTY	TOTAL SHEETS	SHEET NO.
90/94	36	COOK	19	4
F.A.I. RTE.		F.A.P. RTE.		
FED. ROAD DIST. NO.	ILLINOIS	FED. AID PROJECT		

℄ 1985-080 R

MAJOR WORK ITEMS:
Remove and replace existing Superstructure and Piers. Rehabilitate Bent F & Bent J. No salvage value.
Traffic is to be maintained during construction.

STATION 5+60.09
REBUILT 198__ BY
STATE OF ILLINOIS
HARRISON STREET SEC.
F.A. PROJ. IDR-94-3 (268)
LOADING HS 20
STR. NO. 016-1088

NAME PLATE
(See Std. 2113)

TOTAL BILL OF MATERIAL

ITEMS	UNIT	SUPER	SUB(1)	TOTAL
Removal of Existing Superstructures	L. Sum	LS	—	LS
Concrete Removal	Cu. Yd.	—	113.5	113.5
Expansion Bolts (¾" ϕ)	Each	—	292	292
Structure Excavation	Cu. Yd.	—	364	364
Protective Coat	Sq. Yd.	1211	33	1242
Class X Concrete	Cu. Yd.	—	341.4	341.4
Furnishing and Erecting Structural Steel	L. Sum	.15	—	.15
Stud Shear Connectors	Each	5,520	—	5,520
Reinforcement Bars	Pound	—	52,280	52,280
Reinforcement Bars (Epoxy Coated)	Pound	67,510	—	67,510
Elastomeric Bearing Assembly Type I	Each	36	—	36
Pedestrian Railing - 6 Ft.	Lin. Ft.	314	—	314
Formed Concrete Repair (Depth ≤ 1½")	Sq. Ft.	—	150	150
Epoxy Crack Sealing	Lin. Ft.	—	20	20
Name Plates	Each	1	—	1
Preformed Joint Seal, 2½"	Lin. Ft.	71	—	71
Preformed Joint Seal, 4"	Lin. Ft.	71	—	71
Caisson Shafts, 36" ϕ	Cu. Ft.	—	2,150	2,150
Caisson Bells	Cu. Ft.	—	882	882
Protective Shield	Sq. Yd.	2,140	—	2,140
Geocomposite Wall Drain	Sq. Yd.	—	85	85
Class X Concrete Superstructure	Cu. Yd.	364	—	364
Pipe Underdrain - Perf. Corrugated - 6"	Lin. Ft.	—	115	115
		—		

(1) Substructure quantities also include Retaining Wall 6II.

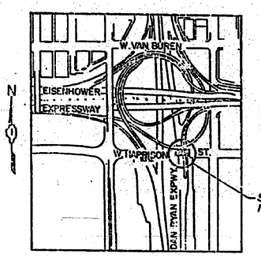

LOCATION PLAN

DESIGN CRITERIA

DESIGN SPECIFICATIONS:
A.A.S.H.T.O. 1983 Standard Specifications For Highway Bridges & 1984 & 1985 Interims.

DESIGN CRITERIA:
Live Load: HS 20-44 & Alternate
Sidewalk Live Load: 60 Lbs./S.F.
Soil Pressure: 40 #/C.F. Equivalent Fluid Pressure
Allowable Bearing Pressure For Caisson = 12 Kips/S.F.
Allow 25 #/Sq. Ft. For Future Wearing Surface.

DESIGN STRESSES

Concrete:	f'_c = 3,500	PSI		Proposed Structure
Reinforcing Steel (Grade 60):	F_y = 60,000	PSI		
Structural Steel (M 223) GR 50	F_y = 50,000	PSI		
(M 183):	F_y = 36,000	PSI		
Concrete:	f'_c = 1,400	PSI		Existing Structure
Reinforcing Steel:	f_s = 20,000	PSI		

LEGEND

⊙ Proposed Soil Boring
△ Existing Structure
------ Existing Structure

SHEET S-1 OF S-17

J. T. Tsen 7-17-87

APPROVED
JAMES T. RYAN
ENGINEER OF BRIDGES AND STRUCTURES

Rev. 11-23-87
Rev. 12-9-87

REVISIONS	
Name	Date
(3) Revision	3-11-88

PLANS PREPARED BY
P.G. ENGINEERING ASSOCIATES, INC
603 WEST JACKSON BLVD.
CHICAGO, ILLINOIS, 60606

STATE OF ILLINOIS
DEPARTMENT OF TRANSPORTATION
F.A.I. ROUTE 90/94 (DAN RYAN EXPRESSWAY)
SECTION 1985-080 R — COOK COUNTY
HARRISON STREET OVER DAN RYAN EXPRESSWAY
GENERAL PLAN & ELEVATION
S.N. 016-1088

Scale: None
Date: AUGUST 14, 1987
Drawn By: S.D.D.
Checked By:
ENVIROTYPE ENGINEERS INC.
Chicago, Illinois

D160W71-sht-AS-BUILT-04.dgn

USER NAME = dunkerleyb	DESIGNED -	REVISED
	CHECKED -	REVISED
PLOT SCALE = N.T.S.	DRAWN -	REVISED
PLOT DATE = 11/26/2013	CHECKED -	REVISED

STATE OF ILLINOIS
DEPARTMENT OF TRANSPORTATION

EXISTING AS-BUILTS SN 016-1088

SHEET NO. AS-04 OF AS-72 SHEETS

F.A.I. RTE.	SECTION	COUNTY	TOTAL SHEETS	SHEET NO.
90/94/290	2013-036R	COOK	256	146

CONTRACT NO. 60W71

ILLINOIS FED. AID PROJECT -NUMBER-

FOR INFORMATION ONLY

F.A.I. RTE. NO.	SECTION	COUNTY	TOTAL SHEETS	SHEET NO.
90/94	8	COOK	79	44
STA.	TO STA.			
FED. RD. DIST. NO.	ILLINOIS	FED. AID PROJECT		

1985-080 R

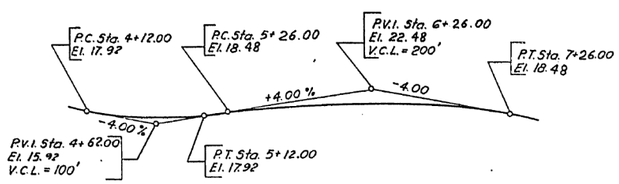

HARRISON STREET

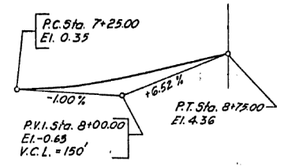

NORTH EAST RAMP

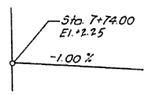

N.B.I.-90/94

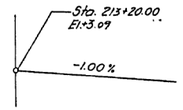

N.B. COLLECTOR DISTRIBUTOR

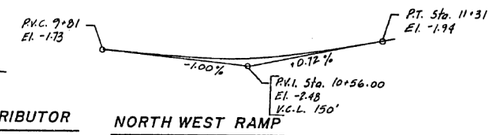

NORTH WEST RAMP

PROFILE GRADES ②

GENERAL NOTES

See Proposal for Boring Data and Historical Plans Dated July 1960.

Fasteners shall be high strength bolts. Bolts 7/8"ϕ, open holes 15/16"ϕ, bolts 3/4"ϕ, open holes 13/16"ϕ, unless otherwise noted.

④ Calculated weight of Structural Steel = M-183 = 31,020 Lbs.
" " " = M-223Gr.50 = 196,077 Lbs.

Field welding of construction accessories will not be permitted to the bottom flange of beams nor to the top flange for a distance equal to one-fourth the span length each way from the pier support. Field welding in other areas will be permitted only when approved by the Engineer.

Anchor bolts shall be set before bolting diaphragms over support.

The structural steel bearing plates of the Elastomeric Bearing Assembly shall conform to the requirements of A.A.S.H.T.O. M 223.

④ The main load carrying member components subject to tensile stress shall conform to the Supplemental Requirements for Notch Toughness Zone 2. These Components are(the wide flange beams)(the tension flanges, webs) and all splice plate material of the steel girders.
The Zinc-silicate and vinyl paint system shall be used for shop and field painting of Structural Steel except where otherwise noted.

Exterior beams: The final finish coat shall be a medium yellow vinyl enamel paint which conforms with Section 712, △1 Article 712.26 of the Standard Specification and as directed by the Engineer. The intermediate coat shall be a High-Build vinyl paint of a color which shall be distinct from the final coat.

Interior beams: The finish coat shall be a aluminum colored High-Build vinyl paint which conforms with Section 712, Article 712.26 of the Supplemental Specification and as directed by the Engineer.

Plan dimension and details relative to existing structure have been taken from existing plans and are subject to nominal construction variations. It shall be the Contractor's responsibility to verify such dimensions and details in the field and make necessary approved ajustments prior to construction or ordering of materials. Such variation shall not be cause for additional compensation for a change in the scope of the work, however, the Contractor will be paid for the quantity actually furnished at the unit price bid for the work.

Expansion bolts shall consist of approved expansion anchors, providing minimum certified proof load = 4,080 lbs., And 3/4"ϕ x 12" hooked bolts.

Bearing seat surface shall be constructed or adjusted to the designated elevations within a tolerance of 1/8 inch. Adjustment shall be made either by grinding the surface or by shimming the bearing. Two 1/8" adjusting shims, of the dimensions of the bottom bearing plate, shall be provided for each bearing in addition to all other plates or shims. (For Type I Elastomeric bearings, shims of the dimensions of top plate shall be provided and placed as detailed.)

△1 Reinforcement bars shall conform to the requirements of A.A.S.H.T.O. M-31, M-42 or M-53 Grade 60.

△1 All high strength bolts connections shall conform to the requirements of the latest issue of the Specifications for Structural Joints using ASTM A325 (M164) or A490 (M253) bolts for slip-critical connections. Except tightening methods using either the load indicating washers or the Calibrated Wrench are not allowed.

△1 All structural steel fabricators performing work on the main load carrying components of steel structures shall be certified under Category I (AISC) of the Quality Certification Program

SHEET S-2 OF S-17

△1 Rev. 11-25-87

REVISIONS	
Name	Date
② Revision	2-5-86
④ Revision	4-26-88

PLANS PREPARED BY
P.G. ENGINEERING ASSOCIATES, INC.
600 WEST JACKSON BLVD.
CHICAGO ILLINOIS, 60606

STATE OF ILLINOIS
DEPARTMENT OF TRANSPORTATION
F.A.I. ROUTE 90/94 (DAN RYAN EXPRESSWAY)
SECTION 1985-080 R - COOK COUNTY
HARRISON STREET OVER DAN RYAN EXPRESSWAY
GENERAL NOTES & PROFILE GRADES

Scale: None
Date: AUGUST 14, 1987
Drawn By: S.D.D.
Checked By:

ENVIROTYME ENGINEERS INC.
Chicago, Illinois

D160W71-sht-AS-BUILT-05.dgn

USER NAME = dunkerleyb	DESIGNED -	REVISED	
	CHECKED -	REVISED	
PLOT SCALE = N.T.S.	DRAWN -	REVISED	
PLOT DATE = 11/26/2013	CHECKED -	REVISED	

STATE OF ILLINOIS
DEPARTMENT OF TRANSPORTATION

EXISTING AS-BUILTS SN 016-1088

SHEET NO. AS-05 OF AS-72 SHEETS

F.A.I. RTE.	SECTION	COUNTY	TOTAL SHEETS	SHEET NO.
90/94/290	2013-036R	COOK	256	147
		CONTRACT NO. 60W71		
	ILLINOIS	FED. AID PROJECT -NUMBER-		

FOR INFORMATION ONLY

STATE OF ILLINOIS
DEPARTMENT OF TRANSPORTATION

ROUTE NO.	SECTION	COUNTY	TOTAL SHEETS	SHEET NO.
90/94	*	COOK	79	45
STA.		TO STA.		
FED. RD. DIST. NO.	ILLINOIS	FED. AID PROJECT		

* 1985-080 R

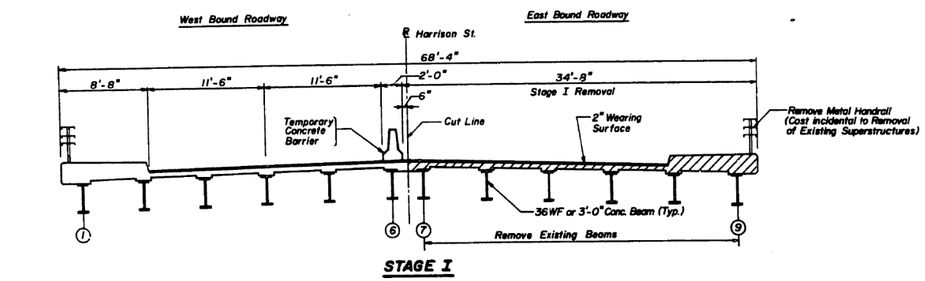

STAGE I

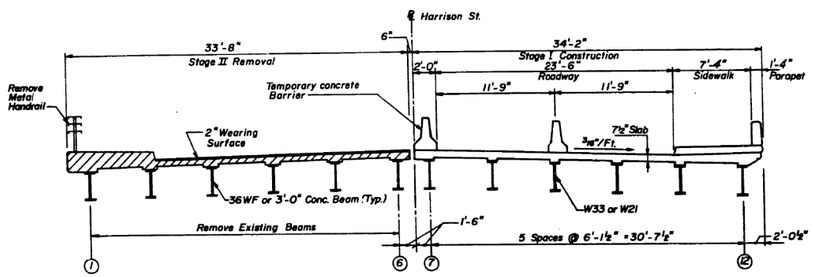

STAGE II

LEGEND

Removal of Existing Superstructure

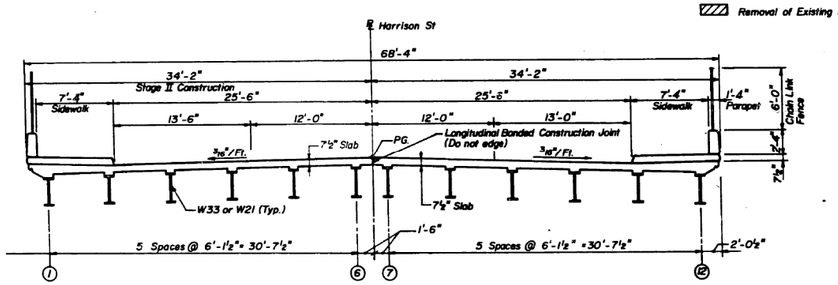

FINAL CROSS SECTION

SHEET S-3 OF S-17

REVISIONS	
NAME	DATE

PLANS PREPARED BY
P.B. ENGINEERING ASSOCIATES, INC.
600 WEST JACKSON BLVD.
CHICAGO ILLINOIS, 60606

STATE OF ILLINOIS
DEPARTMENT OF TRANSPORTATION
F.A.I. ROUTE 90/94 (DAN RYAN EXPRESSWAY)
SECTION 1985-080 R - COOK COUNTY
HARRISON STREET OVER DAN RYAN EXPRESSWAY
STAGE CONSTRUCTION DETAILS

Scale : None
Date : AUGUST 14, 1987
Drawn By: S.D.D.
Checked By:

ENVIRODYNE ENGINEERS INC.
Chicago, Illinois

D160W71-sht-AS-BUILT-06.dgn

USER NAME = dunkerleyb	DESIGNED -	REVISED	
	CHECKED -	REVISED	
PLOT SCALE = N.T.S.	DRAWN -	REVISED	
PLOT DATE = 11/26/2013	CHECKED -	REVISED	

STATE OF ILLINOIS
DEPARTMENT OF TRANSPORTATION

EXISTING AS-BUILTS SN 016-1088

SHEET NO. AS-06 OF AS-72 SHEETS

F.A.I. RTE.	SECTION	COUNTY	TOTAL SHEETS	SHEET NO.
90/94/290	2013-036R	COOK	256	148
		CONTRACT NO. 60W71		
	ILLINOIS	FED. AID PROJECT -NUMBER-		

FOR INFORMATION ONLY

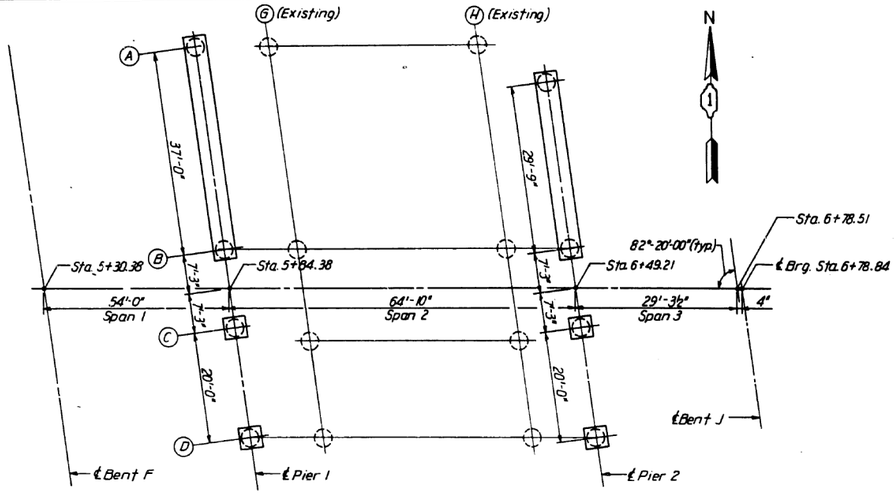

FOUNDATION LAYOUT

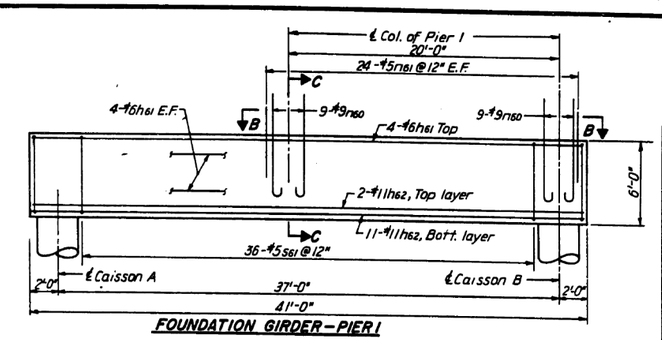

FOUNDATION GIRDER-PIER 1

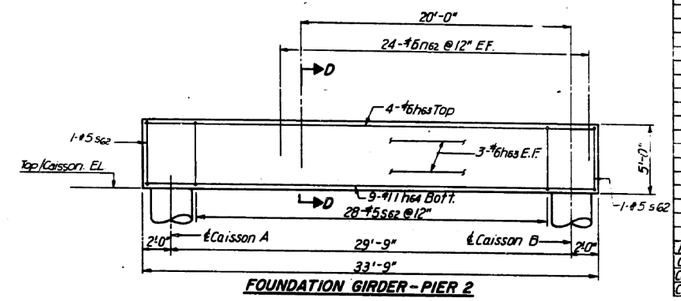

FOUNDATION GIRDER-PIER 2

FEDERAL AID ROUTE NO.	SECTION	COUNTY	TOTAL SHEETS	SHEET NO.
90/94	#	COOK	'79	46
STA.		TO STA.		
FED. RD. DIST. NO.	ILLINOIS	FED. AID PROJECT		

1985-080 R

BILL OF MATERIAL

Bar	No.	Size	Length	Shape
h61	24	#6	21'-6"	—
h62	26	#11	23'-3"	—
h63	10	#6	33'-5"	—
h64	9	#11	33'-5"	—
n60	52	#9	8'-0"	⊂
n61	48	#5	5'-4"	(
n62	24	#6	7'-1"	(
s61	38	#5	19'-3"	⊡
s62	30	#5	17'-3"	⊡
s63	16	#4	14'-9"	⊡
s64	32	#4	4'-3"	⌒
sp61	4	#4	400'-0"	WM
sp62	4	#4	422'-0"	WM
sp63	8	#4	453'-0"	WM
v60	56	#5	3'-2"	—
v61	32	#10	19'-0"	—
v62	32	#10	20'-0"	—
v63	64	#10	21'-0"	—
Reinf. Bars			Lbs.	25,940
Class X Concrete			Cu. Yds.	697
Caisson Shaft Conc.			Cu. Ft.	2,150
Caisson Bell Conc.			Cu. Ft.	882

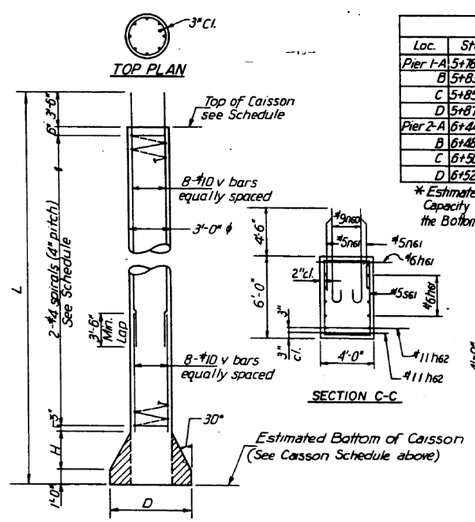

CAISSON SCHEDULE

Loc.	Sta.	Offset	Top El.	Bott. El.*	D	L	H	Bar	Spiral
Pier 1-A	5+78.48	43'-10½"	-8.00	-45.00	6'-6"	37'-0"	3'-0"	V62	SP62
B	5+83.41	7'-24"	-8.00	-45.00	9'-6"	37'-0"	5'-8"	V61	SP61
C	5+85.35	7'-24"	-5.50	-45.00	7'-9"	39'-6"	4'-2"	V63	SP63
D	5+87.88	27'-0"	-5.50	-45.00	7'-6"	39'-6"	4'-0"	V63	SP63
Pier 2-A	6+44.27	36'-8"	-8.00	-45.00	6'-3"	37'-0"	3'-0"	V62	SP62
B	6+48.24	7'-24"	-8.00	-45.00	9'-0"	37'-0"	5'-3"	V61	SP61
C	6+50.18	7'-24"	-6.50	-45.00	7'-3"	38'-6"	3'-9"	V63	SP63
D	6+52.81	27'-0"	-6.50	-45.00	7'-0"	38'-6"	3'-6"	V63	SP63

* Estimated Bottom of Caisson Elevations are given for the Soil Bearing Capacity of 12 KSF. If this capacity is not achieved at these Elevations then, the Bottom of Caisson Elevations shall be adjusted at the direction of the Engineer.

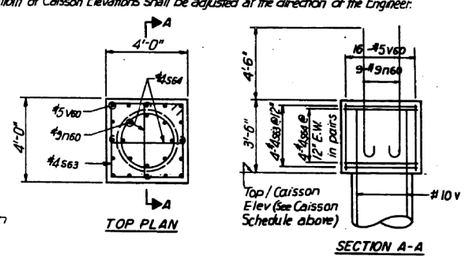

PEDESTAL DETAILS

(FOR PIER 1)

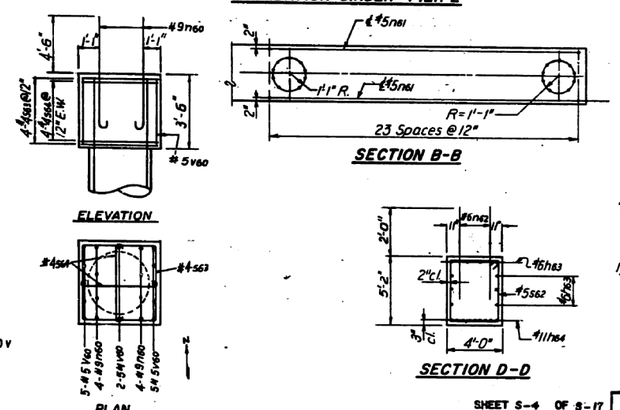

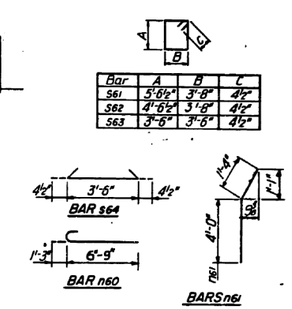

Bar	A	B	C
s61	5'-6½"	3'-8"	4½"
s62	4'-6½"	3'-8"	4½"
s63	3'-6"	3'-6"	4½"

SHEET S-4 OF S-17

REVISIONS	
Name	Date

PLANS PREPARED BY
P.G. ENGINEERING ASSOCIATES, INC.
600 WEST JACKSON BLVD.
CHICAGO, ILLINOIS, 60606

STATE OF ILLINOIS
DEPARTMENT OF TRANSPORTATION
F.A.I. ROUTE 90/94 (DAN RYAN EXPRESSWAY)
SECTION 1985-080 R - COOK COUNTY
HARRISON STREET OVER DAN RYAN EXPRESSWAY
CAISSON LAY-OUT & FOUNDATION BEAM

Scale: None
Date: AUGUST 14, 1987
Drawn By: J.M.R.
Checked By: -

ENVIRODYNE ENGINEERS INC.
Chicago, Illinois

D160W71-sht-AS-BUILT-07.dgn

USER NAME = dunkerleyb	DESIGNED -	REVISED	
	CHECKED -	REVISED	
PLOT SCALE = N.T.S.	DRAWN -	REVISED	
PLOT DATE = 11/26/2013	CHECKED -	REVISED	

STATE OF ILLINOIS
DEPARTMENT OF TRANSPORTATION

EXISTING AS-BUILTS SN 016-1088

SHEET NO. AS-07 OF AS-72 SHEETS

F.A.I. RTE.	SECTION	COUNTY	TOTAL SHEETS	SHEET NO.
90/94/290	2013-036R	COOK	256	149
		CONTRACT NO. 60W71		
	ILLINOIS	FED. AID PROJECT -NUMBER-		

FOR INFORMATION ONLY

STATE OF ILLINOIS
DEPARTMENT OF TRANSPORTATION

FEDERAL AID ROUTE NO.	SECTION	COUNTY	TOTAL SHEETS	SHEET NO.
90/94	*	COOK	79	47

STA. TO STA.
FED. RD. DIST. NO. | ILLINOIS | FED. AID PROJ. NEXT

* 1985-080 R

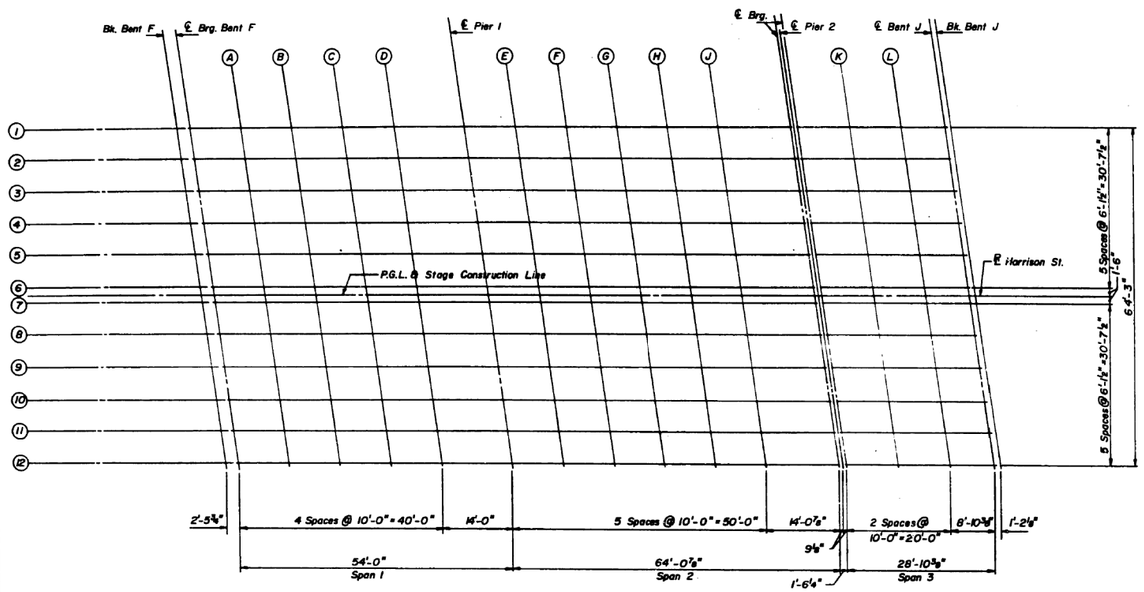

PLAN

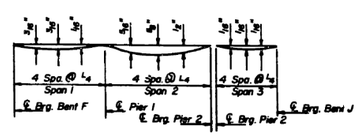

DEAD LOAD DEFLECTION DIAGRAM

(Includes weight of concrete only)
Note: The above deflections are not to be used in the field if the engineer is working from the grade elevations adjusted for dead load deflection as shown.

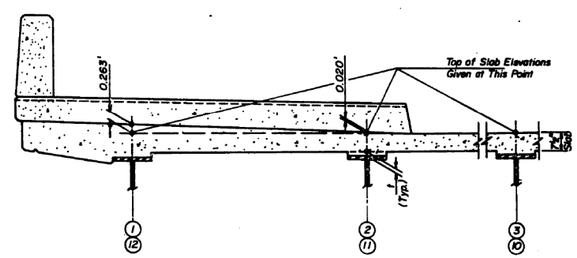

To determine "t": After all structural steel has been erected, elevations of the top flanges of the beams shall be taken at intervals shown. These elevations subtracted from the "Theoretical Grade Elevations Adjusted for Dead Load Deflection" shown, minus slab thickness, equals the fillet heights "t" above top flange of beams.

FILLET HEIGHTS

SHEET S-5 OF S-17

REVISIONS	
NAME	DATE

PLANS PREPARED BY
P.B. ENGINEERING ASSOCIATES, INC.
600 WEST JACKSON BLVD.
CHICAGO ILLINOIS, 60606

STATE OF ILLINOIS
DEPARTMENT OF TRANSPORTATION
F.A.I. ROUTE 90/94 (DAN RYAN EXPRESSWAY)
SECTION 1985-080 R - COOK COUNTY
HARRISON STREET OVER DAN RYAN EXPRESSWAY
DECK ELEVATION LOCATION PLAN

Scale: None — Drawn By: S.D.D.
Date: AUGUST 14, 1987 — Checked By:
ENVIRODYNE ENGINEERS INC.
Chicago, Illinois

D160W71-sht-AS-BUILT-08.dgn

USER NAME = dunkerleyb	DESIGNED -	REVISED	
	CHECKED -	REVISED	
PLOT SCALE = N.T.S.	DRAWN -	REVISED	
PLOT DATE = 11/26/2013	CHECKED -	REVISED	

STATE OF ILLINOIS
DEPARTMENT OF TRANSPORTATION

EXISTING AS-BUILTS SN 016-1088

SHEET NO. AS-08 OF AS-72 SHEETS

F.A.I. RTE.	SECTION	COUNTY	TOTAL SHEETS	SHEET NO.
90/94/290	2013-036R	COOK	256	150

CONTRACT NO. 60W71

ILLINOIS FED. AID PROJECT -NUMBER-

FOR INFORMATION ONLY

PERSONAL AND ROUTE NO.	SECTION	COUNTY	TOTAL SHEETS	SHEET NO.
90/94	4	COOK	79	48
STA.		TO STA.		
FED. RD. DIST. NO.	ILLINOIS	FED. AID PROJECT		

BEAM-1

Location	Station	Offset	Theoretical Grade Elevations	Theoretical Grade Elevations Adjusted For Dead Load Deflection
BK. BENT F	523.576	32.125	17.881	17.881
℄ BRG. BENT F	526.056	32.125	17.980	17.980
A	536.056	32.125	18.360	18.369
B	546.056	32.125	18.700	18.715
C	556.056	32.125	19.000	19.014
D	566.056	32.125	19.259	19.266
℄ PIER I	580.056	32.125	19.556	19.556
E	590.056	32.125	19.720	19.735
F	600.056	32.125	19.843	19.879
G	610.056	32.125	19.927	19.977
H	620.056	32.125	19.971	20.022
J	630.056	32.125	19.975	20.012
℄ W. BRG. P2	644.126	32.125	19.912	19.912
℄ PIER 2	644.889	32.125	19.907	19.907
℄ E. BRG. P2	645.649	32.125	19.901	19.902
K	655.649	32.125	19.802	19.820
L	665.649	32.125	19.664	19.669
℄ BENT J	674.514	32.125	19.507	19.507
BK. BENT J	675.685	32.170	19.484	19.484

BEAM-2

Location	Station	Offset	Theoretical Grade Elevations	Theoretical Grade Elevations Adjusted For Dead Load Deflection
BK. BENT F	526.401	26.000	18.010	18.010
℄ BRG. BENT F	526.880	26.000	18.109	18.109
A	536.880	26.000	18.485	18.494
B	546.880	26.000	18.822	18.837
C	556.880	26.000	19.118	19.132
D	566.880	26.000	19.375	19.381
℄ PIER I	580.880	26.000	19.667	19.667
E	590.880	26.000	19.827	19.842
F	600.880	26.000	19.948	19.983
G	610.880	26.000	20.028	20.077
H	620.880	26.000	20.069	20.119
J	630.880	26.000	20.069	20.106
℄ W. BRG. P2	644.953	26.000	20.002	20.002
℄ PIER 2	645.713	26.000	19.996	19.996
℄ E. BRG. P2	646.473	26.000	19.990	19.991
K	656.473	26.000	19.888	19.906
L	666.473	26.000	19.746	19.751
℄ BENT J	675.338	26.000	19.587	19.587
BK. BENT J	676.515	26.000	19.563	19.563

BEAM-3

Location	Station	Offset	Theoretical Grade Elevations	Theoretical Grade Elevations Adjusted For Dead Load Deflection
BK. BENT F	525.225	19.875	18.138	18.138
℄ BRG. BENT F	527.705	19.875	18.237	18.237
A	537.705	19.875	18.610	18.619
B	547.705	19.875	18.943	18.959
C	557.705	19.875	19.237	19.251
D	567.705	19.875	19.490	19.496
℄ PIER I	581.705	19.875	19.777	19.777
E	591.705	19.875	19.934	19.949
F	601.705	19.875	20.051	20.087
G	611.705	19.875	20.129	20.178
H	621.705	19.875	20.166	20.217
J	631.705	19.875	20.163	20.200
℄ W. BRG. P2	645.777	19.875	20.091	20.091
℄ PIER 2	646.538	19.875	20.085	20.085
℄ E. BRG. P2	647.298	19.875	20.079	20.080
K	657.298	19.875	19.974	19.991
L	667.298	19.875	19.828	19.833
℄ BENT J	676.163	19.875	19.666	19.666
BK. BENT J	677.340	19.875	19.642	19.642

BEAM-4

1985-080 R

Location	Station	Offset	Theoretical Grade Elevations	Theoretical Grade Elevations Adjusted For Dead Load Deflection
BK. BENT F	526.050	13.750	18.267	18.267
℄ BRG. BENT F	528.529	13.750	18.365	18.365
A	538.529	13.750	18.735	18.746
B	548.529	13.750	19.065	19.080
C	558.529	13.750	19.355	19.369
D	568.529	13.750	19.605	19.611
℄ PIER I	582.529	13.750	19.887	19.887
E	592.529	13.750	20.041	20.056
F	602.529	13.750	20.155	20.190
G	612.529	13.750	20.229	20.278
H	622.529	13.750	20.263	20.314
J	632.529	13.750	20.257	20.296
℄ W.BRG. P2	646.602	13.750	20.180	20.180
℄ PIER 2	647.362	13.750	20.174	20.174
℄ E. BRG. P2	648.122	13.750	20.167	20.168
K	658.122	13.750	20.059	20.076
L	668.122	13.750	19.910	19.915
℄ BENT J	676.987	13.750	19.745	19.745
BK. BENT J	678.164	13.750	19.721	19.721

BEAM-5

Location	Station	Offset	Theoretical Grade Elevations	Theoretical Grade Elevations Adjusted For Dead Load Deflection
BK. BENT F	526.874	7.625	18.396	18.396
℄ BRG. BENT F	529.354	7.625	18.493	18.493
A	539.354	7.625	18.859	18.868
B	549.354	7.625	19.186	19.201
C	559.354	7.625	19.473	19.487
D	569.354	7.625	19.719	19.726
℄ PIER I	583.354	7.625	19.997	19.997
E	593.354	7.625	20.148	20.163
F	603.354	7.625	20.258	20.294
G	613.354	7.625	20.329	20.378
H	623.354	7.625	20.359	20.410
J	633.354	7.625	20.350	20.387
℄ W. BRG. P2	647.426	7.625	20.269	20.269
℄ PIER 2	648.187	7.625	20.262	20.262
℄ E. BRG. P2	648.947	7.625	20.256	20.257
K	658.947	7.625	20.184	20.161
L	668.947	7.625	19.992	19.999
℄ BENT J	677.812	7.625	19.824	19.824
BK. BENT J	678.989	7.625	19.799	19.799

BEAM-6

Location	Station	Offset	Theoretical Grade Elevations	Theoretical Grade Elevations Adjusted For Dead Load Deflection
BK. BENT F	527.699	1.500	18.524	18.524
℄ BRG. BENT F	530.178	1.500	18.628	18.628
A	540.178	1.500	18.983	18.992
B	550.178	1.500	19.307	19.322
C	560.178	1.500	19.598	19.606
D	570.178	1.500	19.833	19.840
℄ PIER I	584.178	1.500	20.107	20.107
E	594.178	1.500	20.254	20.269
F	604.178	1.500	20.361	20.397
G	614.178	1.500	20.429	20.478
H	624.178	1.500	20.456	20.507
J	634.178	1.500	20.443	20.480
℄ W. BRG. P2	648.251	1.500	20.358	20.358
℄ PIER 2	649.011	1.500	20.351	20.351
℄ E. BRG. P2	649.771	1.500	20.344	20.345
K	659.771	1.500	20.228	20.246
L	669.771	1.500	20.073	20.078
℄ BENT J	678.636	1.500	19.902	19.902
BK. BENT J	679.813	1.500	19.877	19.877

P.G.L. & STAGE CONSTRUCTION JOINT

Location	Station	Offset	Theoretical Grade Elevations	Theoretical Grade Elevations Adjusted For Dead Load Deflection
BK. BENT F	527.901	0.000	18.555	18.555
℄ BRG. BENT F	530.380	0.000	18.651	18.651
A	540.380	0.000	19.016	19.022
B	550.380	0.000	19.336	19.352
C	560.380	0.000	19.619	19.633
D	570.380	0.000	19.861	19.868
℄ PIER I	584.380	0.000	20.134	20.134
E	594.380	0.000	20.280	20.295
F	604.380	0.000	20.387	20.422
G	614.380	0.000	20.453	20.502
H	624.380	0.000	20.479	20.530
J	634.380	0.000	20.466	20.503
℄ W. BRG. P2	648.453	0.000	20.379	20.379
℄ PIER 2	649.213	0.000	20.372	20.372
℄ E. BRG. P2	649.973	0.000	20.365	20.366
K	659.973	0.000	20.249	20.267
L	669.973	0.000	20.093	20.098
℄ BENT J	678.838	0.000	19.922	19.922
BK. BENT J	680.015	0.000	19.896	19.896

SHEET S-6 OF S-17

REVISIONS	
Name	Date

PLANS PREPARED BY
P.B. ENGINEERING ASSOCIATES, INC.
600 WEST JACKSON BLVD.
CHICAGO ILLINOIS, 60606

STATE OF ILLINOIS
DEPARTMENT OF TRANSPORTATION
F.A.I. ROUTE 90/94 (DAN RYAN EXPRESSWAY)
SECTION 1985-080 R - COOK COUNTY
HARRISON STREET OVER DAN RYAN EXPRESSWAY
TOP OF SLAB ELEVATIONS - I

Scale : None
Date: AUGUST 14, 1987
Drawn By: S.D.D.
Checked By:

ENVIROTITE ENGINEERS INC.
Chicago, Illinois

D160W71-sht-AS-BUILT-09.dgn

USER NAME = dunkerleyb	DESIGNED -	REVISED	
	CHECKED -	REVISED	
PLOT SCALE = N.T.S.	DRAWN -	REVISED	
PLOT DATE = 11/26/2013	CHECKED -	REVISED	

STATE OF ILLINOIS
DEPARTMENT OF TRANSPORTATION

EXISTING AS-BUILTS SN 016-1088

SHEET NO. AS-09 OF AS-72 SHEETS

F.A.I. RTE.	SECTION	COUNTY	TOTAL SHEETS	SHEET NO.
90/94/290	2013-036R	COOK	256	151
		CONTRACT NO. 60W71		
		ILLINOIS FED. AID PROJECT -NUMBER-		

FOR INFORMATION ONLY

ORIGINAL ADD ROUTE NO.	SECTION	COUNTY	TOTAL SHEETS	SHEET NO.
90/94	*	COOK	79	49
STA.		TO STA.		
FED. RD. DIST. NO.	ILLINOIS	FED. AID PROJECT		

* 1985-080 R

BEAM-7

Location	Station	Offset	Theoretical Grade Elevations	Theoretical Grade Elevations Adjusted For Dead Load Deflection
BK. BENT F	528.103	-1.500	18.540	18.540
℄ BRG. BENT F	530.582	-1.500	18.636	18.636
A	540.582	-1.500	18.997	19.006
B	550.582	-1.500	19.319	19.334
C	560.582	-1.500	19.601	19.615
D	570.582	-1.500	19.842	19.849
℄ PIER I	584.582	-1.500	20.113	20.113
E	594.582	-1.500	20.259	20.274
F	604.582	-1.500	20.365	20.400
G	614.582	-1.500	20.430	20.480
H	624.582	-1.500	20.456	20.507
J	634.582	-1.500	20.442	20.479
℄ W. BRG. P2	648.655	-1.500	20.354	20.354
℄ PIER 2	649.415	-1.500	20.347	20.347
℄ E. BRG. P2	650.175	-1.500	20.340	20.341
K	660.175	-1.500	20.223	20.241
L	670.175	-1.500	20.066	20.081
℄ BENT J	679.040	-1.500	19.894	19.894
BK. BENT J	680.217	-1.500	19.869	19.869

BEAM-8

Location	Station	Offset	Theoretical Grade Elevations	Theoretical Grade Elevations Adjusted For Dead Load Deflection
BK. BENT F	528.927	-7.625	18.476	18.476
℄ BRG. BENT F	531.406	-7.625	18.571	18.571
A	541.406	-7.625	18.930	18.938
B	551.406	-7.625	19.248	19.263
C	561.406	-7.625	19.526	19.540
D	571.406	-7.625	19.765	19.771
℄ PIER I	585.406	-7.625	20.031	20.031
E	595.406	-7.625	20.174	20.189
F	605.406	-7.625	20.276	20.311
G	615.406	-7.625	20.336	20.388
H	625.406	-7.625	20.361	20.412
J	635.406	-7.625	20.342	20.380
℄ W. BRG. P2	649.479	-7.625	20.251	20.251
℄ PIER 2	650.240	-7.625	20.243	20.243
℄ E. BRG. P2	651.000	-7.625	20.236	20.237
K	661.000	-7.625	20.116	20.133
L	671.000	-7.625	19.956	19.971
℄ BENT J	679.864	-7.625	19.789	19.781
BK. BENT J	681.042	-7.625	19.755	19.755

BEAM-9

Location	Station	Offset	Theoretical Grade Elevations	Theoretical Grade Elevations Adjusted For Dead Load Deflection
BK. BENT F	529.752	-13.750	18.412	18.412
℄ BRG. BENT F	532.231	-13.750	18.507	18.507
A	542.231	-13.750	18.862	18.870
B	552.231	-13.750	19.177	19.192
C	562.231	-13.750	19.452	19.466
D	572.231	-13.750	19.687	19.693
℄ PIER I	586.231	-13.750	19.949	19.949
E	596.231	-13.750	20.088	20.103
F	606.231	-13.750	20.187	20.222
G	616.231	-13.750	20.246	20.296
H	626.231	-13.750	20.265	20.316
J	636.231	-13.750	20.244	20.282
℄ W. BRG. P2	650.304	-13.750	20.167	20.167
℄ PIER 2	651.064	-13.750	20.140	20.140
℄ E. BRG. P2	651.824	-13.750	20.132	20.133
K	661.824	-13.750	20.008	20.026
L	671.824	-13.750	19.885	19.888
℄ BENT J	680.689	-13.750	19.667	19.667
BK. BENT J	681.866	-13.750	19.641	19.641

BEAM-10

Location	Station	Offset	Theoretical Grade Elevations	Theoretical Grade Elevations Adjusted For Dead Load Deflection
BK. BENT F	530.576	-19.875	18.348	18.348
℄ BRG. BENT F	533.055	-19.875	18.442	18.442
A	543.055	-19.875	18.793	18.802
B	553.055	-19.875	19.105	19.121
C	563.055	-19.875	19.377	19.391
D	573.055	-19.875	19.609	19.615
℄ PIER I	587.055	-19.875	19.866	19.866
E	597.055	-19.875	20.002	20.017
F	607.055	-19.875	20.098	20.133
G	617.055	-19.875	20.153	20.203
H	627.055	-19.875	20.169	20.220
J	637.055	-19.875	20.145	20.182
℄ W. BRG. P2	651.128	-19.875	20.043	20.043
℄ PIER 2	651.889	-19.875	20.035	20.035
℄ E. BRG. P2	652.649	-19.875	20.027	20.029
K	662.649	-19.875	19.901	19.918
L	672.649	-19.875	19.734	19.749
℄ BENT J	681.513	-19.875	19.553	19.553
BK. BENT J	682.694	-19.899	19.526	19.525

BEAM-11

Location	Station	Offset	Theoretical Grade Elevations	Theoretical Grade Elevations Adjusted For Dead Load Deflection
BK. BENT F	531.401	-26.000	18.284	18.284
℄ BRG. BENT F	533.880	-26.000	18.377	18.377
A	543.880	-26.000	18.725	18.734
B	553.880	-26.000	19.033	19.049
C	563.880	-26.000	19.302	19.316
D	573.880	-26.000	19.530	19.537
℄ PIER I	587.880	-26.000	19.783	19.783
E	597.880	-26.000	19.916	19.931
F	607.880	-26.000	20.008	20.044
G	617.880	-26.000	20.061	20.110
H	627.880	-26.000	20.073	20.124
J	637.880	-26.000	20.046	20.083
℄ W. BRG. P2	651.953	-26.000	19.939	19.939
℄ PIER 2	652.713	-26.000	19.931	19.931
℄ E. BRG. P2	653.473	-26.000	19.923	19.924
K	663.473	-26.000	19.793	19.811
L	673.473	-26.000	19.623	19.638
℄ BENT J	682.338	-26.000	19.439	19.439
BK. BENT J	683.515	-26.000	19.412	19.412

BEAM-12

Location	Station	Offset	Theoretical Grade Elevations	Theoretical Grade Elevations Adjusted For Dead Load Deflection
BK. BENT F	532.225	-32.125	18.219	18.219
℄ BRG. BENT F	534.704	-32.125	18.311	18.311
A	544.704	-32.125	18.656	18.665
B	554.704	-32.125	18.961	18.977
C	564.704	-32.125	19.227	19.241
D	574.704	-32.125	19.452	19.458
℄ PIER I	588.704	-32.125	19.700	19.700
E	598.704	-32.125	19.829	19.844
F	608.704	-32.125	19.918	19.954
G	618.704	-32.125	19.967	20.017
H	628.704	-32.125	19.977	20.027
J	638.704	-32.125	19.946	19.983
℄ W. BRG. P2	652.777	-32.125	19.835	19.835
℄ PIER 2	653.538	-32.125	19.826	19.826
℄ E. BRG. P2	654.298	-32.125	19.818	19.819
K	664.298	-32.125	19.685	19.702
L	674.298	-32.125	19.512	19.527
℄ BENT J	683.162	-32.125	19.325	19.325
BK. BENT J	684.346	-32.170	19.297	19.297

SHEET S-7 OF S-17

REVISIONS	
Name	Date

PLANS PREPARED BY
P.G. ENGINEERING ASSOCIATES, INC.
600 WEST JACKSON BLVD.
CHICAGO ILLINOIS, 60606

STATE OF ILLINOIS
DEPARTMENT OF TRANSPORTATION
F.A.I. ROUTE 90/94 (DAN RYAN EXPRESSWAY)
SECTION 1985-080 R - COOK COUNTY
HARRISON STREET OVER DAN RYAN EXPRESSWAY
TOP OF SLAB ELEVATIONS - II

Scale: None
Date: AUGUST 14, 1987
Drawn By: S.D.D.
Checked By:

ENVIRODYNE ENGINEERS INC.
Chicago, Illinois

D160W71-sht-AS-BUILT-10.dgn

USER NAME = dunkerleyb	DESIGNED -	REVISED
	CHECKED -	REVISED
PLOT SCALE = N.T.S.	DRAWN -	REVISED
PLOT DATE = 11/26/2013	CHECKED -	REVISED

STATE OF ILLINOIS
DEPARTMENT OF TRANSPORTATION

EXISTING AS-BUILTS SN 016-1088

SHEET NO. AS-10 OF AS-72 SHEETS

F.A.I. RTE.	SECTION	COUNTY	TOTAL SHEETS	SHEET NO.
90/94/290	2013-036R	COOK	256	152
		CONTRACT NO. 60W71		
		ILLINOIS FED. AID PROJECT -NUMBER-		

FOR INFORMATION ONLY

STATE OF ILLINOIS
DEPARTMENT OF TRANSPORTATION

F.A.I. RTE.	SECTION	COUNTY	TOTAL SHEETS	SHEET NO.
90/94/290	2013-036R	COOK	256	153
		CONTRACT NO. 60W71		
		ILLINOIS FED. AID PROJECT -NUMBER-		

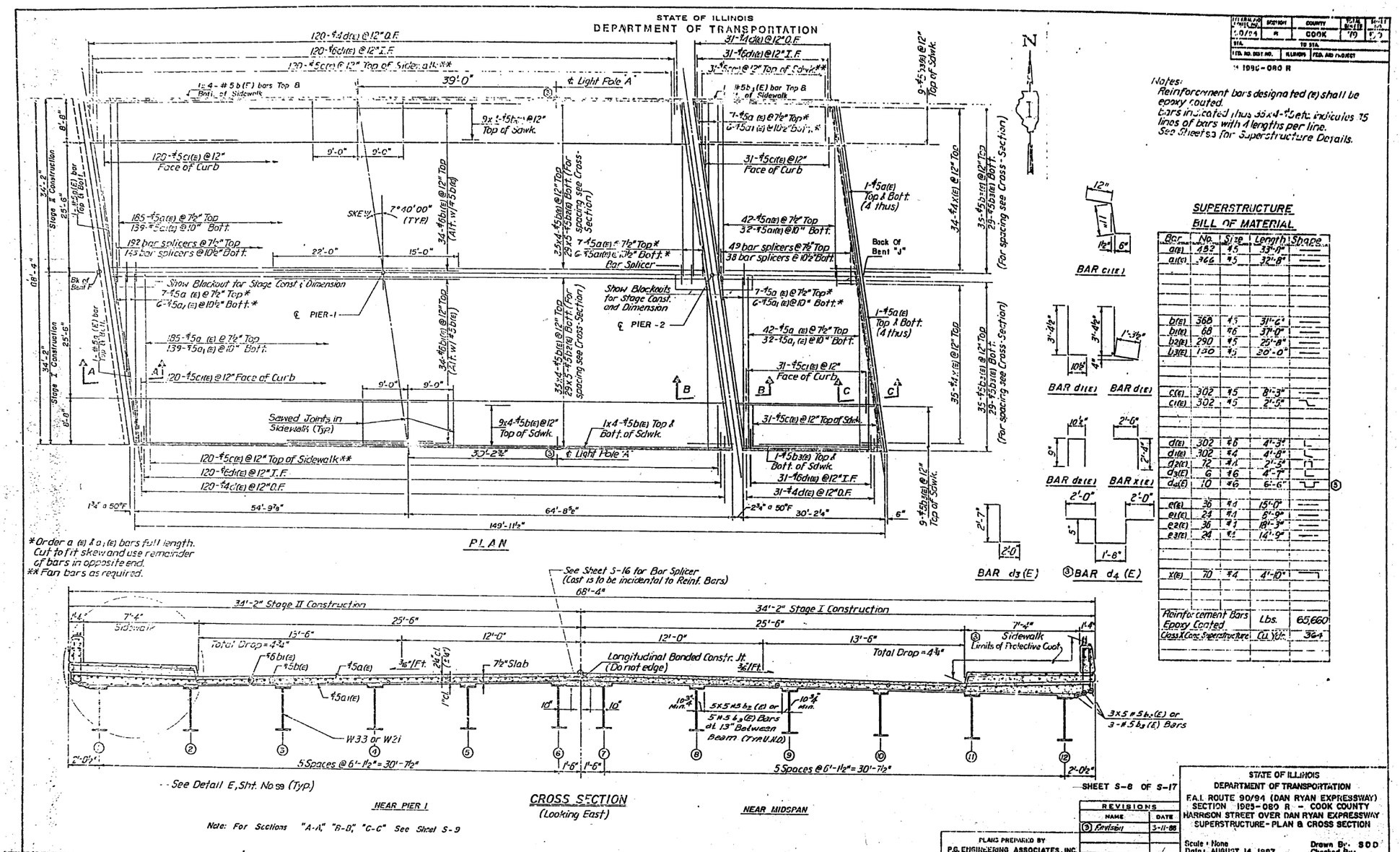

Notes:
Reinforcement bars designated (e) shall be epoxy coated.
Bars indicated thus 35x4-#5 etc. indicates 35 lines of bars with 4 lengths per line.
See Sheet S-5 for Superstructure Details.

*Order a (e) & a1(e) bars full length. Cut to fit skew and use remainder of bars in opposite end.
** Fan bars as required.

SUPERSTRUCTURE BILL OF MATERIAL

Bar	No.	Size	Length	Shape
a(E)	183	#5	33'-0"	
a1(E)	366	#5	32'-8"	
b(E)	368	#5	31'-6"	
b1(E)	68	#6	37'-0"	
b2(E)	290	#5	25'-8"	
b3(E)	130	#5	30'-0"	
c(E)	302	#5	8'-3"	
c1(E)	302	#5	2'-5"	
d(E)	302	#6	4'-3"	
d1(E)	302	#4	4'-8"	
d2(E)	72	#4	2'-3"	
d3(E)	6	#6	4'-7"	
d4(E)	10	#6	6'-6"	
e(E)	36	#4	15'-0"	
e1(E)	24	#4	5'-9"	
e2(E)	36	#4	18'-3"	
e3(E)	24	#4	14'-9"	
x(E)	70	#4	4'-10"	
Reinforcement Bars Epoxy Coated			Lbs.	65,660
Class X Conc. Superstructure			(1) Cy.	364

SHEET S-8 OF S-17

REVISIONS	
NAME	DATE
③ Revision	3-11-88

PLANS PREPARED BY
P.G. ENGINEERING ASSOCIATES, INC.
600 WEST JACKSON BLVD.
CHICAGO, ILLINOIS 60606

STATE OF ILLINOIS
DEPARTMENT OF TRANSPORTATION
F.A.I. ROUTE 90/94 (DAN RYAN EXPRESSWAY)
SECTION 1989-080 R - COOK COUNTY
HARRISON STREET OVER DAN RYAN EXPRESSWAY
SUPERSTRUCTURE - PLAN & CROSS SECTION

Scale: None
Date: AUGUST 14, 1987
Drawn By: SOD
Checked By:
ENVIRONMENT ENGINEERS INC

USER NAME = dunkerleyb	DESIGNED -	REVISED	
	CHECKED -	REVISED	
PLOT SCALE = N.T.S.	DRAWN -	REVISED	
PLOT DATE = 11/26/2013	CHECKED -	REVISED	

STATE OF ILLINOIS
DEPARTMENT OF TRANSPORTATION

EXISTING AS-BUILTS SN 016-1088

SHEET NO. AS-11 OF AS-72 SHEETS

D160W71-sht-AS-BUILT-11.dgn

FOR INFORMATION ONLY

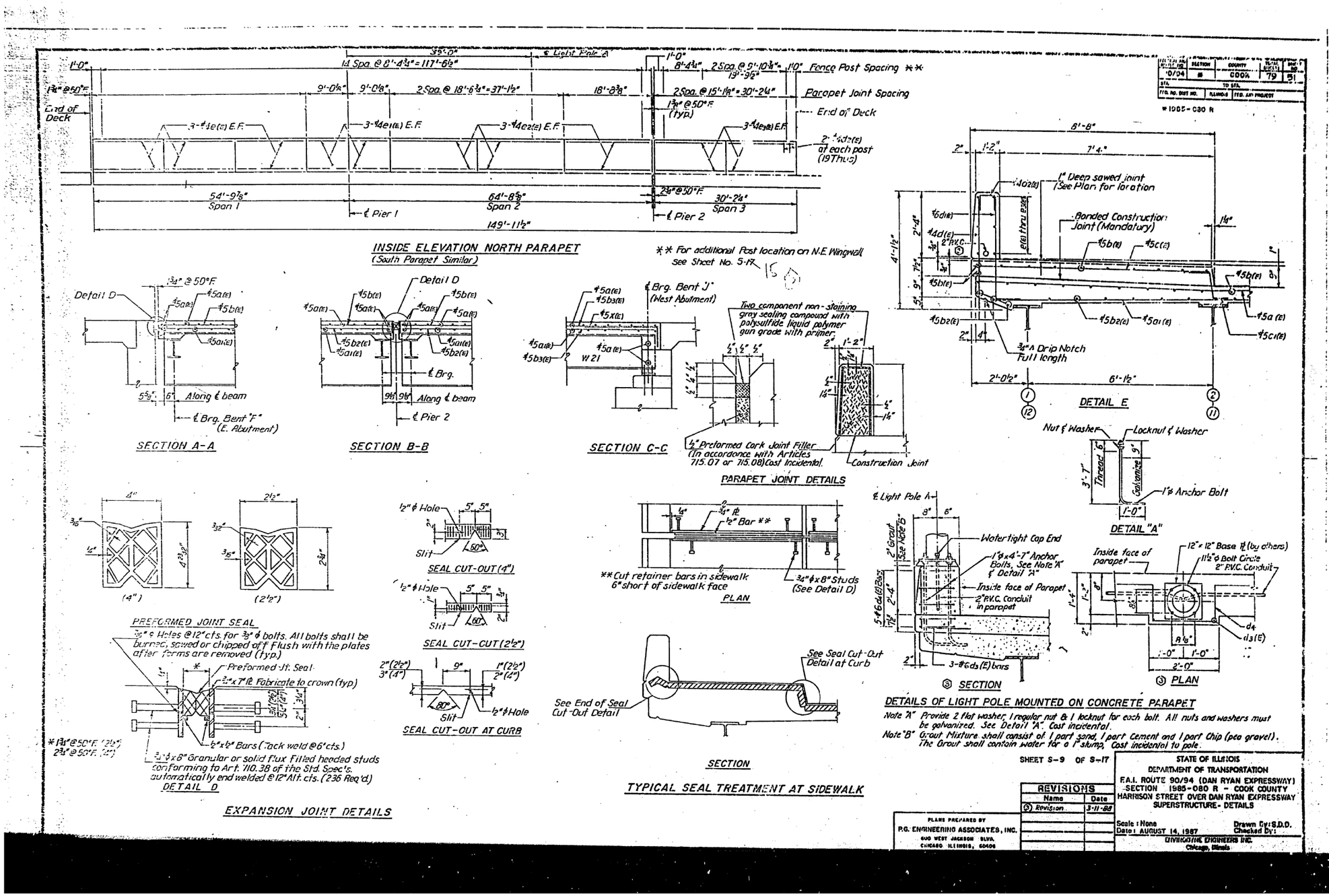

USER NAME = dunkerleyb	DESIGNED -	REVISED
	CHECKED -	REVISED
PLOT SCALE = N.T.S.	DRAWN -	REVISED
PLOT DATE = 11/26/2013	CHECKED -	REVISED

STATE OF ILLINOIS
DEPARTMENT OF TRANSPORTATION

EXISTING AS-BUILTS SN 016-1088

SHEET NO. AS-12 OF AS-72 SHEETS

F.A.I. RTE.	SECTION	COUNTY	TOTAL SHEETS	SHEET NO.
90/94/290	2013-036R	COOK	256	154

CONTRACT NO. 60W71

ILLINOIS FED. AID PROJECT -NUMBER-

D160W71-sht-AS-BUILT-12.dgn

FOR INFORMATION ONLY

STATE OF ILLINOIS
DEPARTMENT OF TRANSPORTATION

W 1985-080 R

F.A.I. ROUTE NO.	SECTION	COUNTY	TOTAL SHEETS	SHEET NO.
90/94	8	COOK	79	52

STA. TO STA.
FED. RD. DIST. NO. | ILLINOIS | FED. AID PROJECT

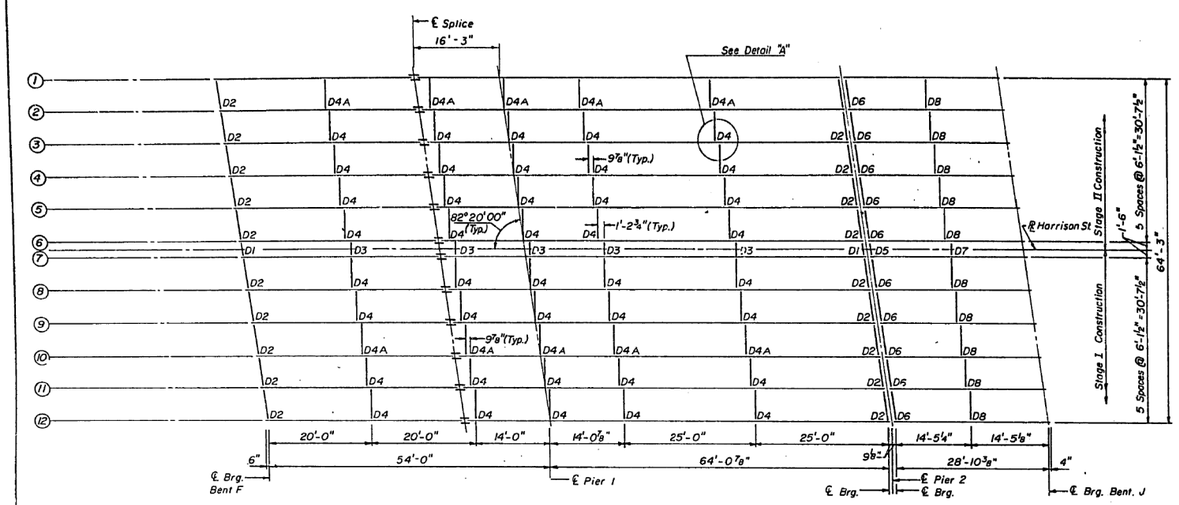

NOTE: Diaphragm D1, D3, D5 & D7 Shall be Installed During Stage II Construction. All structural steel shall be M183 unless noted

FRAMING PLAN

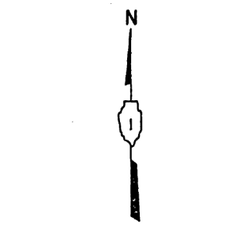

DETAIL A ④

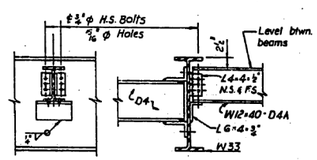

DIAPHRAGM D4A
(10 Required.)

INTERIOR BEAM MOMENT TABLE	0.4 SPAN 1	PIER 1	0.6 SPAN 2	0.5 SPAN 3
Is (in.4)	5,900	5,900	5,900	1330
Ic (in.4)	15,668	–	15,668	4474
Ss (in.³)	359	359	359	127
Sc (in.³)	528	–	528	208
Z (in.³)	–	–	–	–
℄ (K/')	0.71	1.25	0.71	0.66
M℄ (K')	125	556	225	66
s℄ (K/')	0.54	–	0.54	0.54
Ms℄ (¹K)	93	–	169	56
Ml℄ (¹K)	317	273	385	166
Mimp. (¹K)	89	74	102	50
⅔(Ml℄+I) (¹K)	676	578	812	360
Ma (¹K)	1160	434	1,568	629
Mu (¹K)	–	–	–	–
fs℄ non-comp(k.s.i.)	4.11	18.58	7.52	6.43
fs℄ (comp) (k.s.i.)	2.11	–	3.85	3.23
fs ⅔(℄+I) (k.s.i.)	15.37	19.33	18.45	20.77
fs(Overload)(k.s.i.)	21.59	37.91	29.62	30.43
fs(Total)(k.s.i.)	28.07	49.28	38.77	39.56
VR (K)	40.9	–	41.5	36.0

INTERIOR BEAM REACTION TABLE *	BENT F	PIER 1	PIER 2 (SPAN 2)	PIER 2 (SPAN 3)	BENT J
R℄ (K)	23.5	92.7	31.4	17.2	17.2
R℄ (K)	35.8	44.2	36.9	27.1	27.1
Imp. (K)	10.0	12.0	9.8	8.1	8.1
R Total (K)	69.3	148.9	18.1	52.4	52.4

Is and Sc are the moment of inertia and section modulus of the steel section used in computing fs (Total and Overload.)
Ic and Sc are the moment of inertia and section modulus of the composite section used in computing fs (Total and Overload)
VR is the maximum ℄ + impact shear range in span.
Z is the plastic section modulus used to determine the Fully Plastic Moments in non-composite areas.
The Fully Plastic Moment capacity (Mu) is computed according to AASHTO 10.48.1 & 10.50.1.1. fs (Total) is the sum of stresses due to 1.3 [Mdl + Msdl + ⅔ (Mll+I)] fs (Overload) is the sum of the stresses due to Mdl + Msdl + ⅔ (Mll+I)
Mdl - Moment due to dead loads on non-composite section.
Msdl - Moment due to dead loads on composite section.
Mll - Moment due to live load on non-composite or composite section.
I - Live load impact.
Ma = 1.3 [Mdl + Msdl + ⅔ (Mll + I)]
* Values given in Reaction Table are based upon Service Loads.

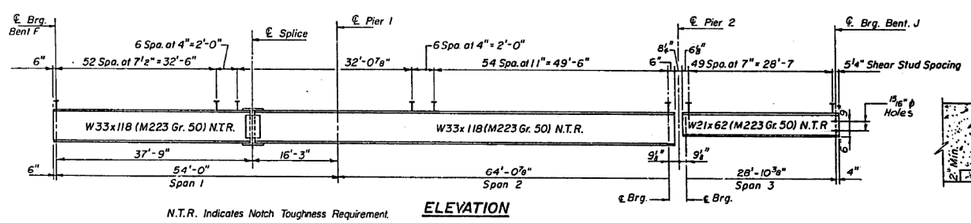

N.T.R. Indicates Notch Toughness Requirement.

ELEVATION

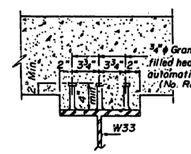

SHEAR STUDS
(Spans 1 & 2)

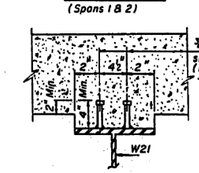

SHEAR STUDS
(Span 3)

TOP OF BEAM ELEVATIONS (For Fabrication Only)

Location / Beam No.	℄ Brg. Bent. F	℄-Splice	℄-Pier #1	℄ Brg. Bet. #2 Span #2	℄ Brg. Bet. #3 Span #3	℄ Brg. Bent. J
1	17.313	18.439	18.602	19.245	19.234	18.840
2	17.442	18.556	18.714	19.335	19.323	18.920
3	17.570	18.671	18.823	19.424	19.412	18.999
4	17.698	18.787	18.934	19.153	19.500	19.078
5	17.826	18.902	19.044	19.602	19.587	19.157
6	17.953	19.017	19.153	19.691	19.677	19.235
7	17.969	19.027	19.160	19.687	19.673	19.227
8	17.904	18.950	19.078	19.584	19.569	19.114
9	17.840	18.872	18.995	19.480	19.465	19.000
10	17.775	18.795	18.913	19.376	19.360	18.886
11	17.710	18.718	18.830	19.272	19.256	18.772
12	17.644	18.640	18.747	19.168	19.151	18.658

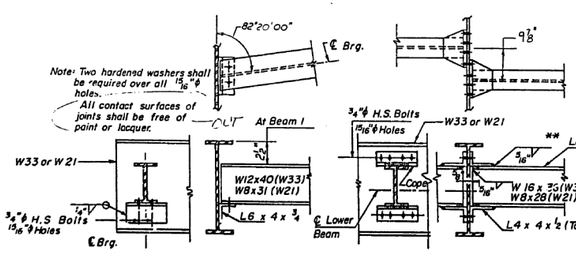

** For very small skews when bolt holes overlap run diaphragm level O. to O.

DIAPHRAGM D1, D2, D5 & D6
(D1=2, D2=20, D5=1 & D6=10 Required)

DIAPHRAGM D3, D4, D7 & D8
(D3=5, D4=40, D7=1 & D8=10 Required)

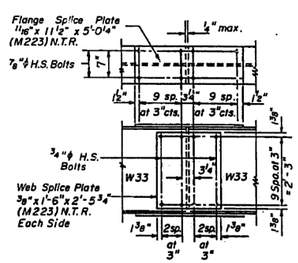

DETAIL OF SPLICE

SHEET S-10 OF S-17

REVISIONS	
NAME	DATE
⑥ Revisions	4-27-88

PLANS PREPARED BY
P.G. ENGINEERING ASSOCIATES, INC.
900 WEST JACKSON BLVD.
CHICAGO, ILLINOIS 60607

STATE OF ILLINOIS
DEPARTMENT OF TRANSPORTATION
F.A.I. ROUTE 90/94 (DAN RYAN EXPRESSWAY)
SECTION 1985-080 R - COOK COUNTY
HARRISON STREET OVER DAN RYAN EXPRESSWAY
STRUCTURAL STEEL FRAMING PLAN

Scale = None | Drawn By S.D.D
Date: AUGUST 14, 1987 | Checked By:

ENVIRODYNE ENGINEERS INC
Chicago Illinois

D160W71-sht-AS-BUILT-13.dgn

USER NAME = dunkerleyb	DESIGNED -	REVISED
	CHECKED -	REVISED
PLOT SCALE = N.T.S.	DRAWN -	REVISED
PLOT DATE = 11/26/2013	CHECKED -	REVISED

STATE OF ILLINOIS
DEPARTMENT OF TRANSPORTATION

EXISTING AS-BUILTS SN 016-1088

SHEET NO. AS-13 OF AS-72 SHEETS

F.A.I. RTE.	SECTION	COUNTY	TOTAL SHEETS	SHEET NO.
90/94/290	2013-036R	COOK	256	155

CONTRACT NO. 60W71

ILLINOIS FED. AID PROJECT -NUMBER-

FOR INFORMATION ONLY

STATE OF ILLINOIS
DEPARTMENT OF TRANSPORTATION

FEDERAL AID ROUTE NO.	SECTION	COUNTY	TOTAL SHEETS	SHEET NO.
90/94	0	COOK	79	53
STA.		TO STA.		
FED. RD. DIST. NO.	ILLINOIS	FED. AID PROJECT		

1985-080 R

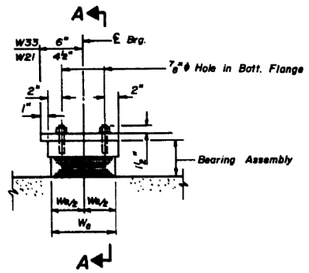

ELEVATION

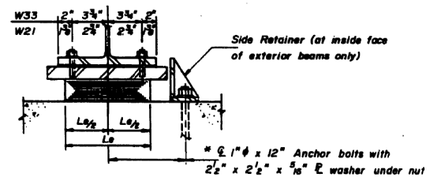

SECTION A-A

TYPE I ELASTOMERIC EXP. BRG.

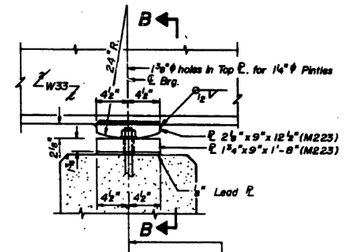

ELEVATION AT PIER-I
(12 Req'd.)

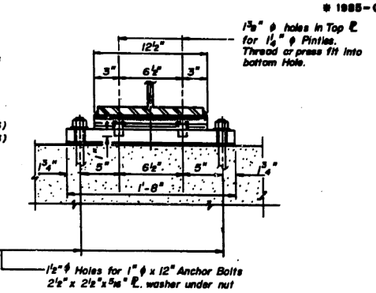

SECTION B-B

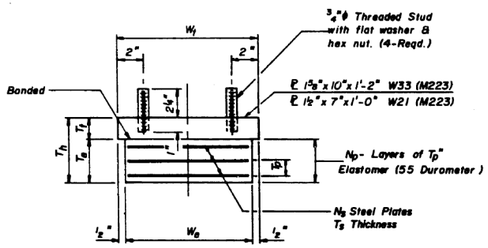

BEARING ASSEMBLY

* Notes: Anchor bolts at fixed bearings may be built into the masonry.
See sheet # for Anchor Bolt installation.

Dimension / Location	W_1	T_1	W_6	L_6	T_6	T_h	N_p	T_p	N_s	T_s
Bent F (W33)	10	1⅜	9	12	2⅛	3⅞	5	⅜	4	3/32
Pier 2 (W33)										
Pier 2 (W21)	7	1½	6	10	1⅞	2 9/16	3	5/16	2	14ga

Note: All dimensions in inches except noted.

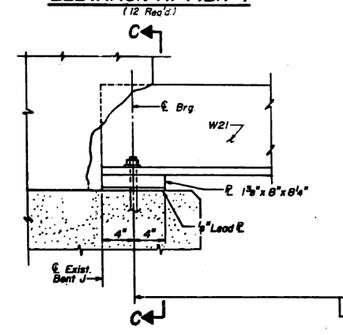

ELEVATION AT BENT J
(12 Req'd.)

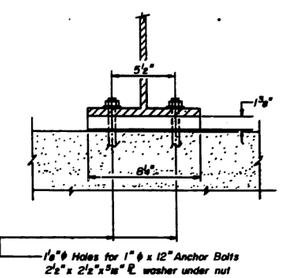

SECTION C-C

FIXED BEARING

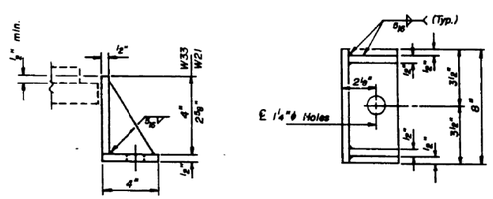

SIDE RETAINER

Equivalent rolled angle with stiffeners will be allowed in lieu of welded plates.

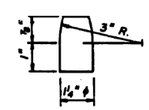

PINTLE

BILL OF MATERIAL

Item	Unit	Total
Elastomeric Bearing Assembly, Type I	Each	36

Note: All Structural Steel Shall Be M183 Unless Noted.

SHEET S-11 OF S-17

REVISIONS	
NAME	DATE

PLANS PREPARED BY
P.B. ENGINEERING ASSOCIATES, INC.
600 WEST JACKSON BLVD.
CHICAGO ILLINOIS, 60606

STATE OF ILLINOIS
DEPARTMENT OF TRANSPORTATION
F.A.I. ROUTE 90/94 (DAN RYAN EXPRESSWAY)
SECTION 1985-080 R - COOK COUNTY
HARRISON STREET OVER DAN RYAN EXPRESSWAY
BEARING DETAILS

Scale: None — Drawn By: S.D.D.
Date: AUGUST 14, 1987 — Checked By:

ENVIRODYNE ENGINEERS INC.
Chicago Illinois

D160W71-sht-AS-BUILT-14.dgn

USER NAME = dunkerleyb	DESIGNED -	REVISED	
	CHECKED -	REVISED	
PLOT SCALE = N.T.S.	DRAWN -	REVISED	
PLOT DATE = 11/26/2013	CHECKED -	REVISED	

STATE OF ILLINOIS
DEPARTMENT OF TRANSPORTATION

EXISTING AS-BUILTS SN 016-1088

SHEET NO. AS-14 OF AS-72 SHEETS

F.A.I. RTE.	SECTION	COUNTY	TOTAL SHEETS	SHEET NO.
90/94/290	2013-036R	COOK	256	156
		CONTRACT NO. 60W71		
	ILLINOIS	FED. AID PROJECT -NUMBER-		

FOR INFORMATION ONLY

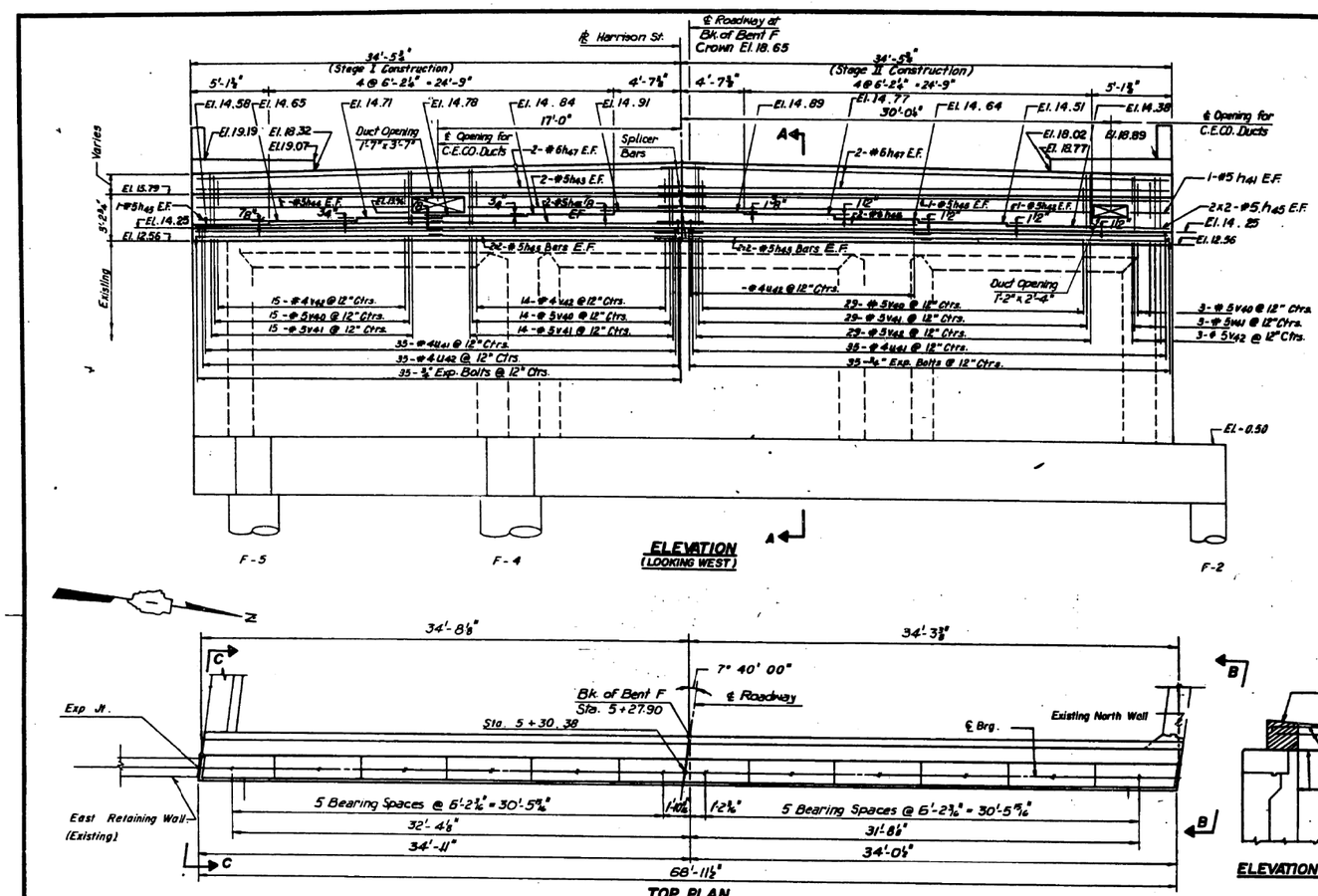

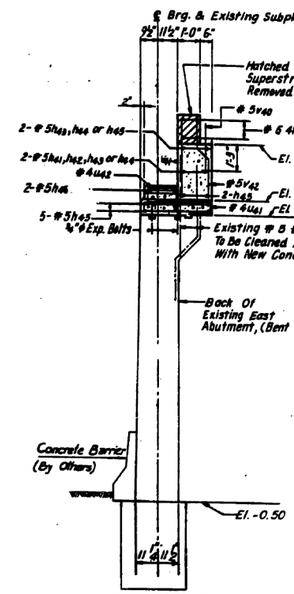

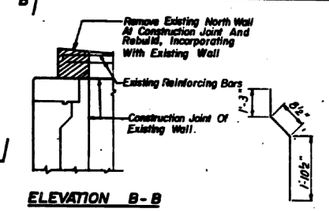

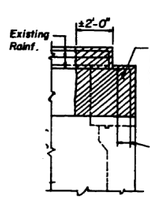

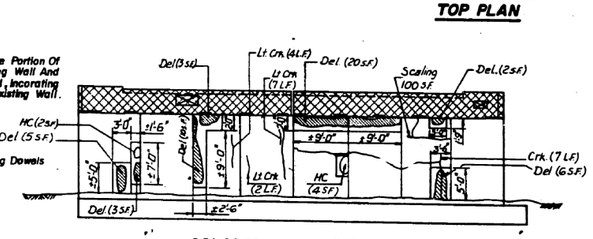

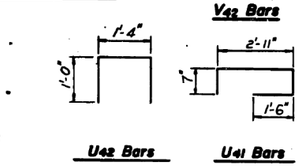

NOTE:
Remove loose concrete, clean and roughen exposed surface before installation of ¾"ϕ Expansion Bolts. Saw cut 1½" deep for mortar repairs.

LEGEND:
- Removal of Existing Concrete.
- Del. = Delamination
- Crk. = Crack.
- HC = Hollow Concrete.
- Lt. Crk. = Light Crack.

BILL OF MATERIAL

Bar	No.	Size	Length	Shape
h_{41}	2	ϕ 5	2'-11"	
h_{42}	2	ϕ 5	28'-6"	
h_{43}	4	ϕ 5	14'-10"	
h_{44}	4	ϕ 5	15'-4"	
h_{45}	30	ϕ 5	18'-4"	
h_{47}	8	ϕ 6	36'-2"	
u_{41}	70	ϕ 4	5'-0"	
u_{42}	70	ϕ 4	3'-4"	
v_{40}	61	ϕ 4	2'-6"	
v_{41}	61	ϕ 5	3'-6"	
v_{42}	61	ϕ 5	3'-10"	
Reinforcement Bars			Lbs.	2100
Class X Concrete			Cu. Yds.	22.3
¾" ϕ Expansion Bolts			Each	140

FEDERAL AID ROUTE NO.	SECTION	COUNTY	TOTAL SHEETS	SHEET NO.
90/94	*	COOK	79	54
STA.		TO STA.		
FED. RD. DIST. NO.	ILLINOIS	FED. AID PROJECT		

* 1985-080 R

SHEET S-12 OF S-17

REVISIONS

Name	Date

PLANS PREPARED BY
P.O. ENGINEERING ASSOCIATES, INC.
600 WEST JACKSON BLVD.
CHICAGO ILLINOIS, 60606

STATE OF ILLINOIS
DEPARTMENT OF TRANSPORTATION
F.A.I. ROUTE 90/94 (DAN RYAN EXPRESSWAY)
SECTION 1985-080 R - COOK COUNTY
HARRISON STREET OVER DAN RYAN EXPRESSWAY
BENT "F"

Scale: None
Date: AUGUST 14, 1987
Drawn By: S.D.D.
Checked By:

ENVIRODYNE ENGINEERS INC.
Chicago, Illinois

D160W71-sht-AS-BUILT-15.dgn

USER NAME = dunkerleyb	DESIGNED -	REVISED
	CHECKED -	REVISED
PLOT SCALE = N.T.S.	DRAWN -	REVISED
PLOT DATE = 11/26/2013	CHECKED -	REVISED

STATE OF ILLINOIS
DEPARTMENT OF TRANSPORTATION

EXISTING AS-BUILTS SN 016-1088

SHEET NO. AS-15 OF AS-72 SHEETS

F.A.I. RTE.	SECTION	COUNTY	TOTAL SHEETS	SHEET NO.
90/94/290	2013-036R	COOK	256	157

CONTRACT NO. 60W71

ILLINOIS FED. AID PROJECT -NUMBER-

FOR INFORMATION ONLY

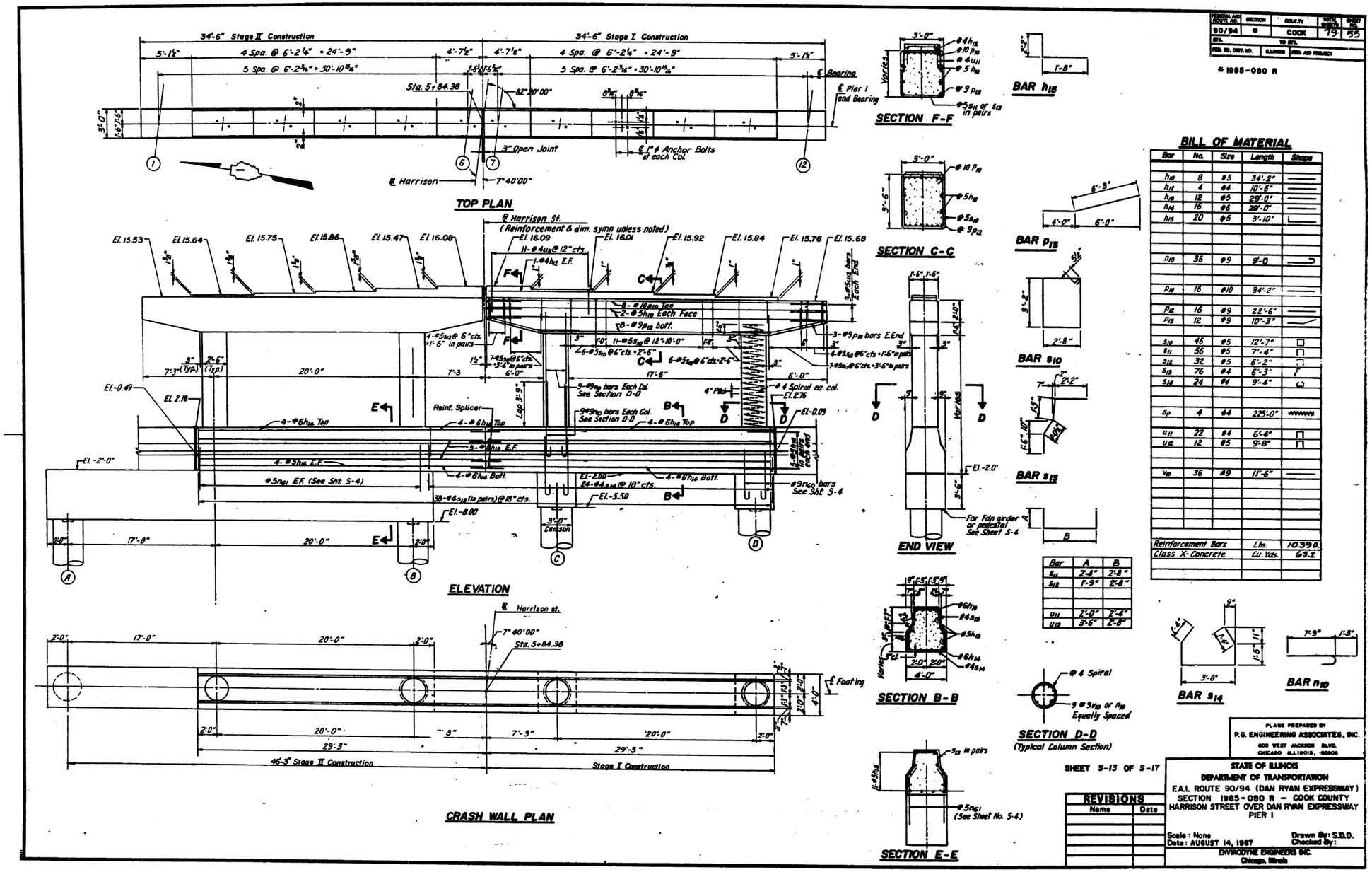

USER NAME = dunkerleyb	DESIGNED -	REVISED
	CHECKED -	REVISED
PLOT SCALE = N.T.S.	DRAWN -	REVISED
PLOT DATE = 11/26/2013	CHECKED -	REVISED

STATE OF ILLINOIS
DEPARTMENT OF TRANSPORTATION

EXISTING AS-BUILTS SN 016-1088

SHEET NO. AS-16 OF AS-72 SHEETS

F.A.I. RTE.	SECTION	COUNTY	TOTAL SHEETS	SHEET NO.
90/94/290	2013-036R	COOK	256	158

CONTRACT NO. 60W71

ILLINOIS FED. AID PROJECT -NUMBER-

D160W71-sht-AS-BUILT-16.dgn

FOR INFORMATION ONLY

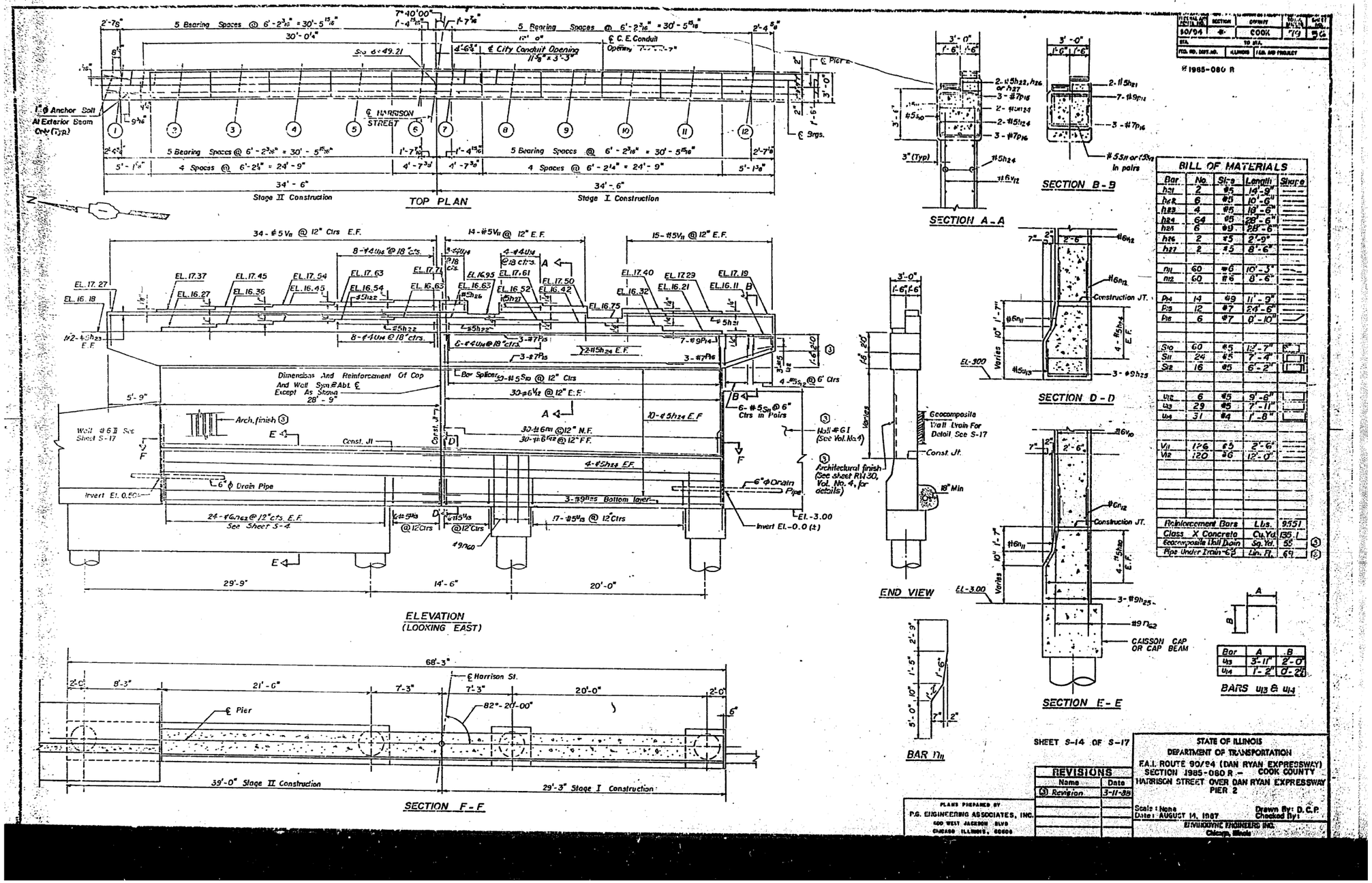

D160W71-sht-AS-BUILT-17.dgn

USER NAME = dunkerleyb	DESIGNED -	REVISED	
	CHECKED -	REVISED	
PLOT SCALE = N.T.S.	DRAWN -	REVISED	
PLOT DATE = 11/26/2013	CHECKED -	REVISED	

STATE OF ILLINOIS
DEPARTMENT OF TRANSPORTATION

EXISTING AS-BUILTS SN 016-1088

SHEET NO. AS-17 OF AS-72 SHEETS

F.A.I. RTE.	SECTION	COUNTY	TOTAL SHEETS	SHEET NO.
90/94/290	2013-036R	COOK	256	159

CONTRACT NO. 60W71

ILLINOIS FED. AID PROJECT -NUMBER-

FOR INFORMATION ONLY

FEDERAL AID ROUTE NO.	SECTION	COUNTY	TOTAL SHEETS	SHEET NO.
90/94	*	COOK	79	57
STA.		TO STA.		
FED. RD. DIST. NO.	ILLINOIS	FED. AID PROJECT		

* 1985-080 R

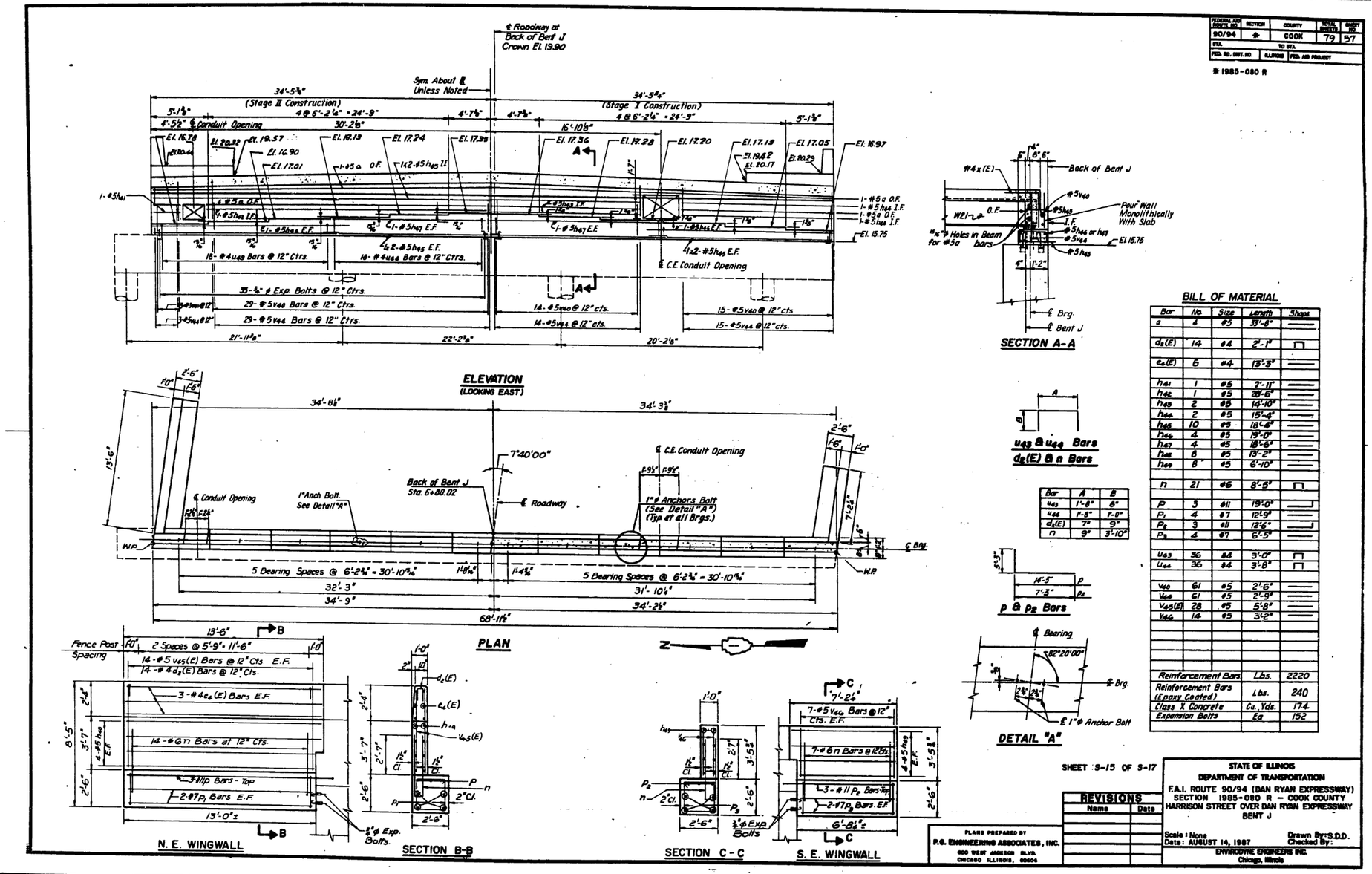

USER NAME = dunkerleyb	DESIGNED -	REVISED
	CHECKED -	REVISED
PLOT SCALE = N.T.S.	DRAWN -	REVISED
PLOT DATE = 11/26/2013	CHECKED -	REVISED

STATE OF ILLINOIS
DEPARTMENT OF TRANSPORTATION

EXISTING AS-BUILTS SN 016-1088

SHEET NO. AS-18 OF AS-72 SHEETS

F.A.I. RTE.	SECTION	COUNTY	TOTAL SHEETS	SHEET NO.
90/94/290	2013-036R	COOK	256	160

CONTRACT NO. 60W71

ILLINOIS FED. AID PROJECT -NUMBER-

D160W71-sht-AS-BUILT-18.dgn

FOR INFORMATION ONLY

STATE OF ILLINOIS
DEPARTMENT OF TRANSPORTATION

ROUTE NO.	SECTION	COUNTY	TOTAL SHEETS	SHEET NO.
90/94	*	COOK	79	58
STA.		TO STA.		
FED. RD. DIST. NO.	ILLINOIS	FED. AID PROJECT		

* 1985-080 R

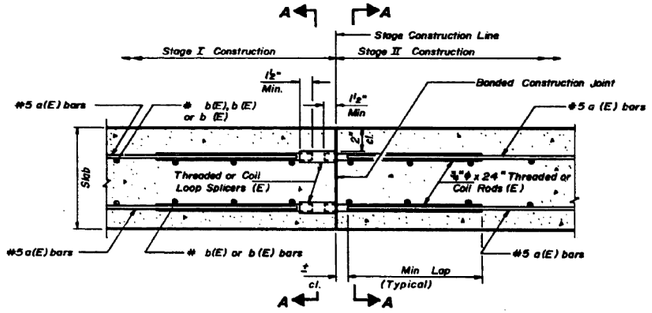

SECTION THRU SLAB

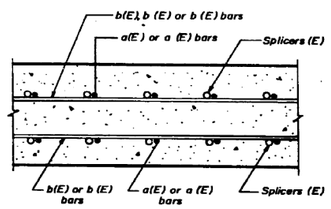

SECTION A-A

SPLICER DETAILS
(No Req'd.)

Cost incidental to reinforcement bars (Epoxy Coated)

Rolled Thread Dowel Bar

WELDED SECTIONS

SPLICER ALTERNATIVES
** Heavy Hex Nuts conforming to ASTM A563, Grade C, D or DH may be used.

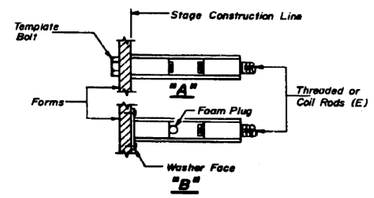

INSTALLATION AND SETTING METHODS
"A" Set splicer by means of a template bolt.
"B" Set splicer by nailing to wood forms or cementing to steel forms.
(E) Indicates epoxy coating, see Special Provisions

NOTES

Steel Splicer (Coupler) assembly shall be of an approved type and shall develop in tension at least 125 percent of the yield strength of the lapped reinforcement bars.

Steel Splicer rods shall be of minimum 60 ksi yield strength, threaded or coiled full length and have effective tensile stress area equal or greater than that of the lapped reinforcement bars.

Splicer rods shall extend minimum 1½ inches into the couplers.

All reinforcement bars shall be lapped and tied to the splicer rods.

Splicer (coupler) assembly in the slab shall be epoxy coated in accordance with the requirements for reinforcement bars.

Other systems of similar design may be submitted to the Engineer for approval. Approval shall be based on certified test results from an approved testing laboratory that the proposed splicer (coupler) assembly satisfies the following requirements:

1 Minimum Capacity = $1.25 \times f_y \times A_t$ (Tension in kips)

2 Minimum # Pull-out Strength = $1.25 \times f_{s_{allow}} \times A_t$ (Tension in kips)

Where f_y = Yield strength of lapped reinforcement bars in k.s.i.
$f_{s_{allow}}$ = Allowable tensile stress in lapped reinforcement bars in k.s.i. (Service Load)
A_t = Tensile stress area of lapped reinforcement bars.
* 28 day concrete

Typical Splicer (Coupler) Assembly Sizes:

In Slabs:
- #5 bar lap with ¾"φ Splicer (Coupler) x 2'-0" Splicer Rods
  - Minimum Capacity = 23.0 kips-tension
  - Minimum Pull-out Strength = 9.2 kips-tension

In Sub-structures:
- #7 bar lap with 1"φ Splicer (Coupler) x 3'-5" Splicer Rods
  - Minimum Capacity = 45.1 kips-tension
  - Minimum Pull-out Strength = 18.0 kips-tension
- #8 bar lap with 1⅛"φ Splicer (Coupler) x 4'-6" Splicer Rods
  - Minimum Capacity = 58.9 kips-tension
  - Minimum Pull-out Strength = 23.6 kips-tension

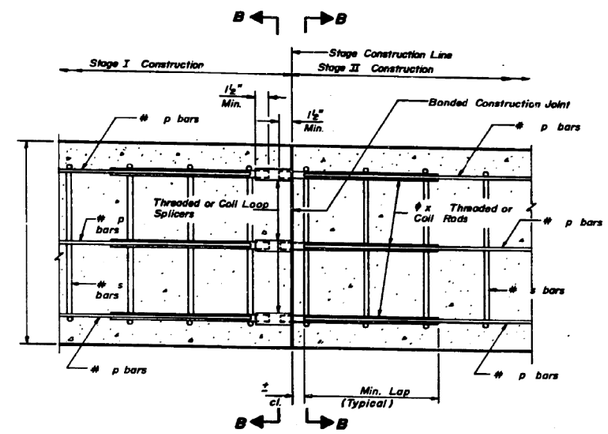

SECTION THRU ABUTMENTS AND PIERS
No epoxy coating required

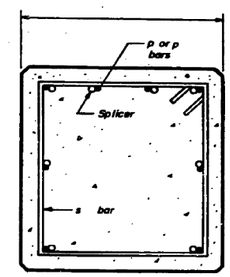

SECTION B-B

SPLICER DETAILS
(No. Req'd.)

Cost incidental to reinforcement bars.

SHEET S-16 OF S-17

REVISIONS	
NAME	DATE

PLANS PREPARED BY
P.G. ENGINEERING ASSOCIATES, INC.
600 WEST JACKSON BLVD.
CHICAGO, ILLINOIS, 60606

STATE OF ILLINOIS
DEPARTMENT OF TRANSPORTATION
F.A.I. ROUTE 90/94 (DAN RYAN EXPRESSWAY)
SECTION 1985-080 R — COOK COUNTY
HARRISON STREET OVER DAN RYAN EXPRESSWAY
SPLICER BAR DETAILS

Scale: None — Drawn By: S.J.D.
Date: AUGUST 14, 1987 — Checked By:

ENVIRODYNE ENGINEERS INC.
Chicago, Illinois

D160W71-sht-AS-BUILT-19.dgn

USER NAME = dunkerleyb	DESIGNED -	REVISED
	CHECKED -	REVISED
PLOT SCALE = N.T.S.	DRAWN -	REVISED
PLOT DATE = 11/26/2013	CHECKED -	REVISED

STATE OF ILLINOIS
DEPARTMENT OF TRANSPORTATION

EXISTING AS-BUILTS SN 016-1088

SHEET NO. AS-19 OF AS-72 SHEETS

F.A.I. RTE.	SECTION	COUNTY	TOTAL SHEETS	SHEET NO.
90/94/290	2013-036R	COOK	256	161

CONTRACT NO. 60W71

ILLINOIS FED. AID PROJECT -NUMBER-

FOR INFORMATION ONLY

F.A.I. ROUTE NO.	SECTION	COUNTY	TOTAL SHEETS	SHEET NO.
90/94	*	COOK	79	59
STA.		TO STA.		
P.O. NO. DIST. NO.	ILLINOIS	FED. AID PROJECT		

* 1985-080 R

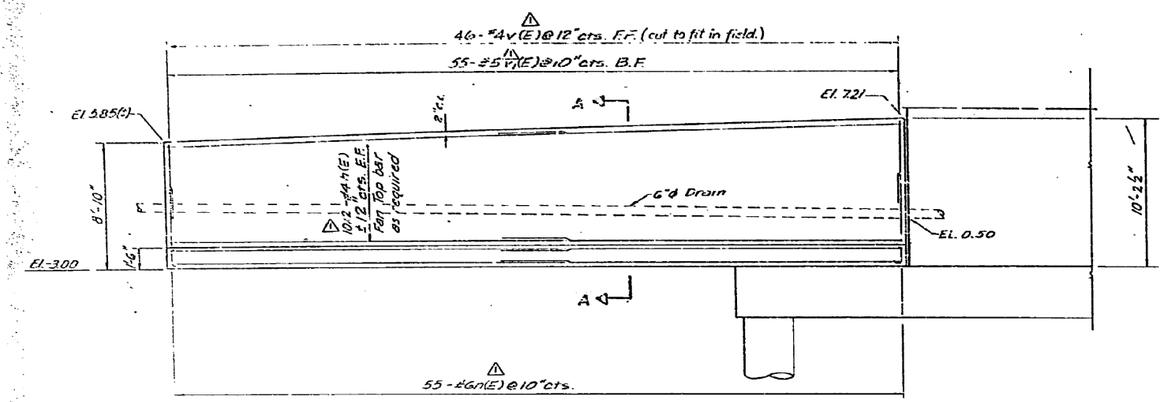

ELEVATION (Looking East)

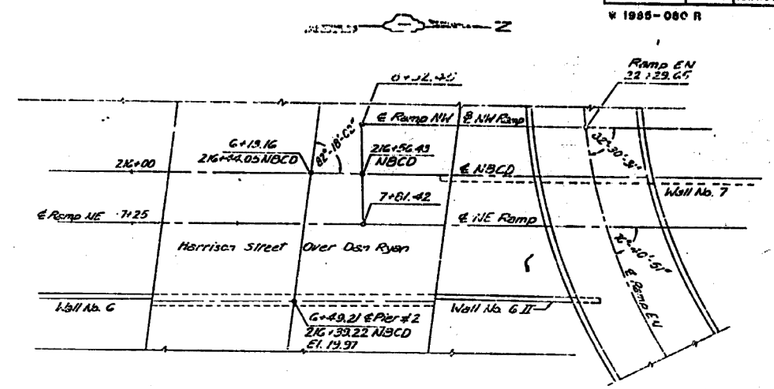

LOCATION PLAN

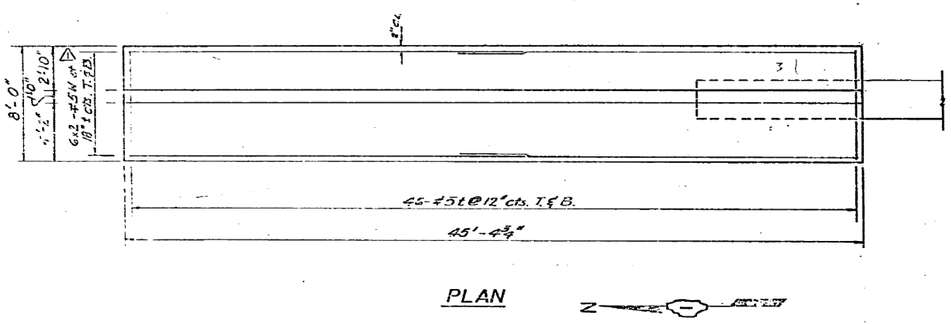

PLAN

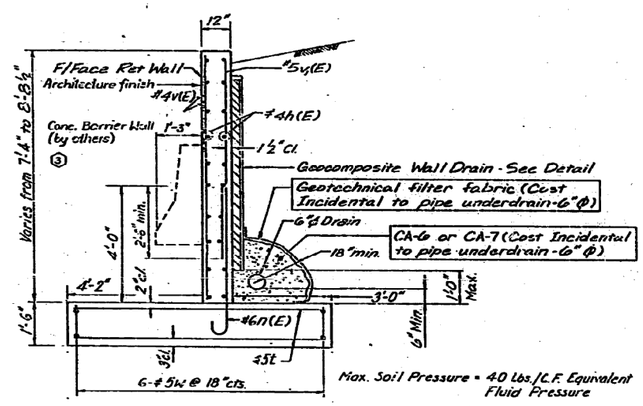

SECTION A-A

(Typical Detail for Wall Drain System) (3)

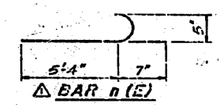

BAR n (E)

WALL 6 II - BILL OF MATERIAL

Bar	No.	Size	Length	Shape
h(E)	40	#4	24'-0"	
n(E)	55	#6	5'-11"	
t	92	#5	7'-8"	
v(E)	46	#4	8'-6"	
v1(E)	55	#5	7'-1"	
w	24	#5	24'-0"	

Item	Unit	Quantity
Reinforcement Bars	lbs.	1840
Class X Concrete	cu.yd.	33.7
Protective Coat	sq.yd.	25
Geocomposite Wall Drain	sq.yd.	30
Pipe Underdrain-6"ϕ	lin.ft.	40
Reinforcement Bars Epoxy Coated	lbs.	1780
Structure Excavation	cu.yd.	120

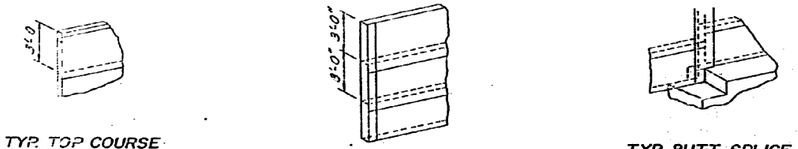

TYP. TOP COURSE

TYP. VERT. CROSS SECTION

TYP. BUTT SPLICE

GEOCOMPOSITE DRAIN DETAIL

Bars designated (E) shall be epoxy coated
F.F. - Front Face of retaining wall
B.B. - Back Face of retaining wall
E.F. - Each Face of retaining wall
(3) See sheet RW30 (Vol. No. 4) for architectural finish details.

Revision - Nov. 23, 1987

SHEET S17 OF S17

REVISIONS	
Name	Date
(2) Revision	3-11-88

STATE OF ILLINOIS
DEPARTMENT OF TRANSPORTATION
F.A.I. ROUTE 90/94 (DAN RYAN EXPRESSWAY)
SECTION 1985-080 R - COOK COUNTY
HARRISON STREET OVER DAN RYAN EXPRESSWAY
WALL 6 II

Scale: None
Date: AUGUST 14, 1987
Drawn By: S.G.D.
Checked By:
ENVIRONTECH ENGINEERS INC.
Chicago, Illinois

D160W71-sht-AS-BUILT-20.dgn

USER NAME = dunkerleyb	DESIGNED -	REVISED
	CHECKED -	REVISED
PLOT SCALE = N.T.S.	DRAWN -	REVISED
PLOT DATE = 11/26/2013	CHECKED -	REVISED

STATE OF ILLINOIS
DEPARTMENT OF TRANSPORTATION

EXISTING AS-BUILTS SN 016-1088

SHEET NO. AS-20 OF AS-72 SHEETS

F.A.I. RTE.	SECTION	COUNTY	TOTAL SHEETS	SHEET NO.
90/94/290	2013-036R	COOK	256	162

CONTRACT NO. 60W71

ILLINOIS FED. AID PROJECT -NUMBER-

FOR INFORMATION ONLY

STATE OF ILLINOIS
DEPARTMENT OF TRANSPORTATION

PROGRAM AND ROUTE NO.	SECTION	COUNTY	TOTAL SHEETS	SHEET NO.
90/94	1	COOK	79	74
STA.		TO STA.		
FED. RD. DIST. NO.	ILLINOIS	FED. AID PROJECT		

* 1985-080 R

D	E	H	K	"d"
1"	1 1/8"	9/16"	1 3/4"	1/4"
1 1/2"	1 5/8"	1 5/16"	2 1/8"	1/2"
2"	2 1/8"	1 9/16"	2 7/8"	1/2"
2 1/2"	2 5/8"	2 5/16"	3 3/8"	1"

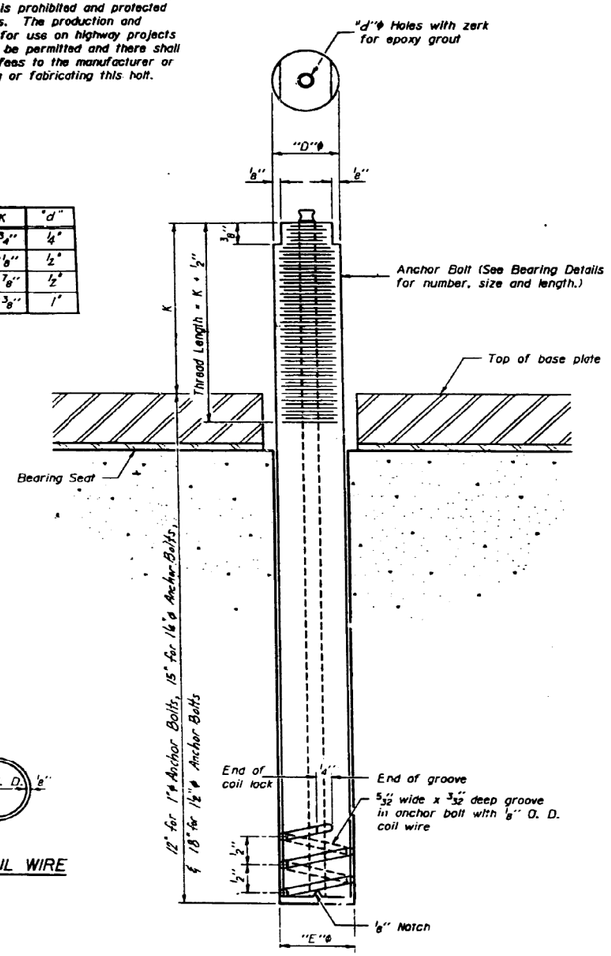

ILLINOIS COIL-LOCK ANCHOR BOLT

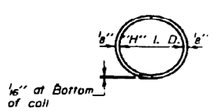

PLAN-COIL WIRE

MATERIALS FOR ILLINOIS COIL-LOCK ANCHOR BOLT

The anchor bolt shall be fabricated from cold drawn or hot finished seamless carbon steel mechanical tubing conforming to ASTM A519, Grade 1026 and supplied with hexagonal nuts and cut washers.

The coil wire shall be made of any suitable soft steel wire.

The finished anchor bolt shall be cleaned of rust and other foreign materials and wrapped or packaged to prevent contamination until they are installed.

The epoxy grout shall be a two-component, epoxy resin bonding system comforming to ASTM C881, Type I, Grade I and of a Class suitable for the temperature at installation.

INSTALLATION PROCEDURE for the ILLINOIS COIL-LOCK ANCHOR BOLT

1. With the coil wire in place, the bolt shall be inserted into the hole and turned clockwise to a snug fit in the hole. Nut and washer shall be placed on the bolt. The nut shall be tensioned until the steel base plates are held securely to the concrete bearing seat.
2. Epoxy grout shall be pumped through the zerk fitting with a pressure gun. Pumping shall continue until the epoxy overflows the hole around the bolt shank. After pumping is discontinued, excess epoxy shall be immediately wiped off.

ALTERNATE ANCHOR BOLTS

The Contractor may use, at his option, the capsule or the adhesive cartridge type anchor rods that have been previously tested and given a prior approval by the Department. The Contractor shall install these anchor rods in pre-drilled holes in accordance with the manufacturer's recommendations and procedures.

The capsule or the adhesive cartridge type anchor rods shall be a two part system composed of:

1. A threaded rod stud with nut and washer conforming to ASTM A307. (Unless Noted)
2. A sealed glass capsule or a sealed glass adhesive cartridge containing premeasured amounts of the adhesive chemical.

GENERAL NOTES

Holes in the masonry for anchor bolts shall be drilled through the base plates to the diameter and depth shown or in accordance with the manufacturer's recommendation after beams or girders have been erected and adjusted.

Prior to setting the bolts, the holes shall be dry and all dust and loose particles shall be removed by the use of compressed air or vacuuming.

The anchor bolts, furnished and installed and including the epoxy grout or capsules shall not be paid for separately but shall be included in the unit bid price each for "Expansion and Fixed Bearings".

Anchor bolt as shown on this drawing to be used at all locations, unless shown otherwise.

Anchor bolts, nuts and washers shall be completely coated by either the hot-dipped process conforming with AASHTO M232 or the mechanical plating method conforming to ASTM B695, Class 50. Zinc Coated nuts shall be tapped oversize in accordance with the requirements of AASHTO M291 and shall meet the supplementary requirements S1.1 thru S1.2.1 of the same specification for lubricant and testing.

SHEET MD1 OF 6

REVISIONS	
Name	Date

STATE OF ILLINOIS
DEPARTMENT OF TRANSPORTATION
F.A.I. ROUTE 90/94 (DAN RYAN EXPRESSWAY)
SECTION 1985-080 R - COOK COUNTY
ROADWAY GRADING AND PAVING
MISCELLANEOUS DETAILS - ALL STRUCTURES
ANCHOR BOLT DETAILS
Scale: NONE Drawn By: REP
Date: AUGUST 14, 1987 Checked By: W.P.K
ENVIRODYNE ENGINEERS INC.
Chicago, Illinois

D160W71-sht-AS-BUILT-21.dgn

USER NAME = dunkerleyb	DESIGNED -	REVISED	
	CHECKED -	REVISED	
PLOT SCALE = N.T.S.	DRAWN -	REVISED	
PLOT DATE = 11/26/2013	CHECKED -	REVISED	

STATE OF ILLINOIS
DEPARTMENT OF TRANSPORTATION

EXISTING AS-BUILTS SN 016-1088

SHEET NO. AS-21 OF AS-72 SHEETS

F.A.I. RTE.	SECTION	COUNTY	TOTAL SHEETS	SHEET NO.
90/94/290	2013-036R	COOK	256	163
		CONTRACT NO. 60W71		
	ILLINOIS	FED. AID PROJECT -NUMBER-		

FOR INFORMATION ONLY

FEDERAL AID ROUTE NO.	SECTION	COUNTY	TOTAL SHEETS	SHEET NO.
90/94	e	COOK	79	75
STA.		TO STA.		
FED. RD. DIST. NO.	ILLINOIS	FED. AID PROJECT		

e 1985-080 R

JOINT SIZE	"C" AT 50°F	"D" AT 50°F
2"	2"	1½" MIN.
2½"	2½"	1¾" MIN.
4"	3"	2½" MIN.

INSTALLATION NOTES

USE ANCHOR BLOCKS AND CONTINUOUS SEAL AS ANCHOR BOLT LOCATION TEMPLATES.

1. INSTALL SPONGE MANDRELS INTO POSITIONS SHOWN TO FORM FLAP CONVOLUTION.
2. INSTALL PARAPET OR SIDEWALK PIECE (TRIM ROADWAY FLAP TO FIT BEFORE APPLYING EPOXY).
3. INSTALL CONTINUOUS SEAL IN ROADWAY.
4. INSTALL ANCHOR BLOCKS AS INDICATED.

NOTE A: MAXIMUM SPACING OF ANCHOR BOLTS SHALL BE 12" CENTERS.

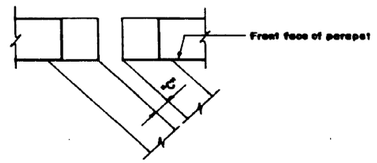

FORMING BLOCKOUT SKETCH

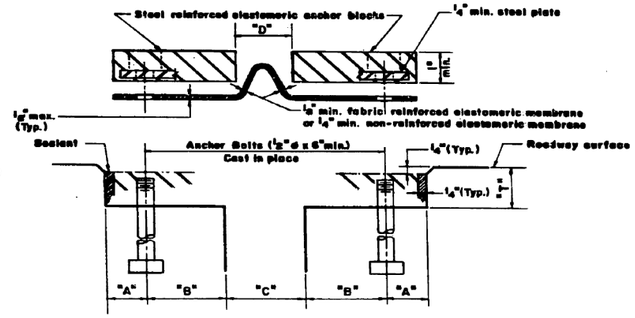

CROSS SECTION

GENERAL NOTES

CONTINUOS SEAL NEOPRENE EXPANSION JOINT SHALL CONSIST OF MOLDED ANCHOR BLOCKS OF ELASTOMER AND STEEL, HELD ASSEMBLED OVER CONTINUOUS LENGTHS OF ELASTOMERIC MEMBRANE. SEE SPECIAL PROVISIONS.

THE ELASTOMERIC MEMBRANE SHALL BE PREMOLDED WITH A SINGLE OR A DOUBLE UPWARD CONVOLUTION THAT WILL HAVE A "MEMORY" TO RETURN TO ITS MOLDED POSITION UPON JOINT CLOSURE.

THE STEEL REINFORCEMENT MUST EXTEND UP THE BACK FACE OF ANCHOR BLOCKS WHEN ASPHALT SURFACES ARE USED BUT IS OPTIONAL IN CONCRETE BLOCKOUT.

THE CONVOLUTION LENGTH SHALL BE SUCH THAT THE EXTENDED LENGTH WILL NOT BE GREATER THAN THE MANUFACTURED LENGTH WHEN THE JOINT IS FULLY EXPANDED IN ITS DESIGN RANGE AND WILL NOT PROTRUDE ABOVE THE ANCHOR BLOCKS WHEN THE JOINT IS FULLY COMPRESSED.

JOINT OPENINGS SHALL BE ADJUSTED IN ACCORDANCE WITH ARTICLE 503.07(a) OF THE STANDARD SPECIFICATIONS WHEN THE DECK IS POURED AT AN AMBIENT TEMPERATURE OTHER THAN 50°F.

THE PARAPET FLAPS MAY BE FURNISHED FACTORY VULCANIZED TO THE ROADWAY MEMBRANE PROVIDED THE CENTERLINE OF THE CONVOLUTION IS MAINTAINED AND THE PROCESS AND METHOD MEET THE APPROVAL OF THE ENGINEER.

ANCHOR BOLTS, WASHERS AND NUTS, TO BE PLATED AGAINST CORROSION IN ACCORDANCE WITH THE SPECIAL PROVISIONS, SHALL BE ZINC-COATED BY THE MECHANICAL PLATING METHOD CONFOMING TO ASTM B695, CLASS 50. ZINC-COATED NUTS SHALL BE TAPPED OVERSIZE IN ACCORDANCE WITH THE REQUIREMENTS OF AASHTO M291 AND SHALL MEET THE SUPPLEMENTARY REQUIREMENTS S1.1 THRU S1.2.1 OF THE SAME SPECIFICATIONS FOR LUBRICANT AND TESTING.

SKEW LIMITATIONS

THE DETAILS OF THE ANCHOR BLOCKS AND THE ELASTOMERIC MEMBRANE IN THE PARAPET, AS SHOWN, ARE FOR UP TO 50° SKEWS.

FOR SKEWS GREATER THAN 50°, THE ANCHOR BLOCKS AND ELASTOMERIC MEMBRANE, INSTALLED IN ACCORDANCE WITH DIMENSION "D" MIGHT REQUIRE MODIFICATIONS TO INSURE A MINIMUM CLEARANCE OF 1½" FROM CENTERLINE OF ANCHOR STUDS TO EDGE OF PARAPET OPENING.

THE ANCHOR BLOCKS AND THE ELASTOMERIC MEMBRANE SHALL ALSO BE INSTALLED TO THE TOP OF PARAPET WITH THE ANCHOR STUDS SPACED AT ≈12" CTS.

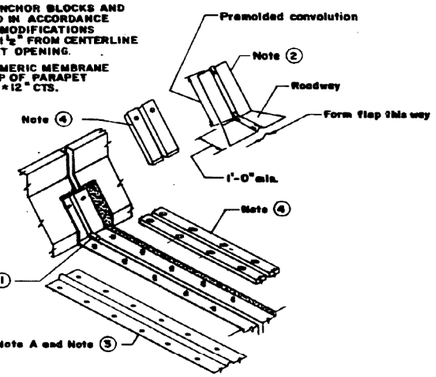

VIEW AT PARAPET FOR FORMING

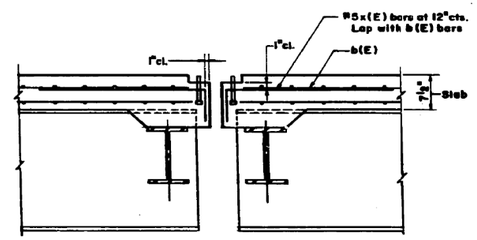

SECTION AT NEOPRENE EXPANSION JOINT

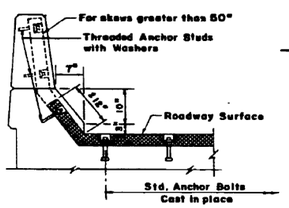

TYPICAL END TREATMENT

SHEET MD 2 OF 6

REVISIONS	
Name	Date

STATE OF ILLINOIS
DEPARTMENT OF TRANSPORTATION
F.A.I. ROUTE 90/94 (DAN RYAN EXPRESSWAY)
SECTION 1985-080 R - COOK COUNTY
ROADWAY GRADING AND PAVING
MISCELLANEOUS DETAILS - ALL STRUCTURES
NEOPRENE EXPANSION JOINTS, 2", 2½" & 4"
Scale: NONE Drawn By: J.R.
Date: AUGUST 14, 1987 Checked By: M.M.
ENVIRODYNE ENGINEERS INC.
Chicago, Illinois

D160W71-sht-AS-BUILT-22.dgn

USER NAME = dunkerleyb	DESIGNED -	REVISED
	CHECKED -	REVISED
PLOT SCALE = N.T.S.	DRAWN -	REVISED
PLOT DATE = 11/26/2013	CHECKED -	REVISED

STATE OF ILLINOIS
DEPARTMENT OF TRANSPORTATION

EXISTING AS-BUILTS SN 016-1088

SHEET NO. AS-22 OF AS-72 SHEETS

F.A.I. RTE.	SECTION	COUNTY	TOTAL SHEETS	SHEET NO.
90/94/290	2013-036R	COOK	256	164
		CONTRACT NO. 60W71		
	ILLINOIS	FED. AID PROJECT -NUMBER-		

FOR INFORMATION ONLY

FEDERAL AID ROUTE NO.	SECTION	COUNTY	TOTAL SHEETS	SHEET NO.
90/94	4	COOK	79	76
STA.		TO STA.		
FED. RD. DIST. NO.	ILLINOIS	FED. AID PROJECT		

* 1985-080 R

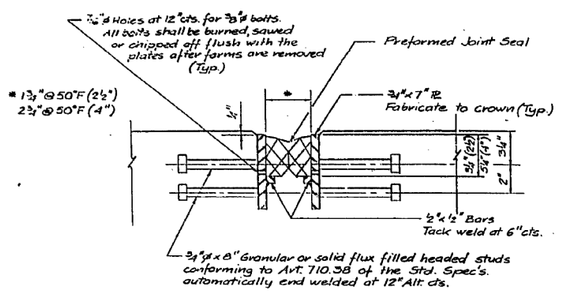

TYPICAL CROSS SECTION

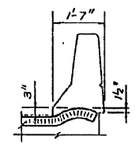

TYPICAL END OF SEAL TREATMENT

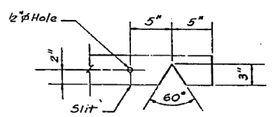

SEAL CUT-OUT (4")

Note:

Joint openings shall be adjusted in accordance with Article 503.07(c) of the Standard Specifications when the deck is poured at an ambient temperature other than 50°F.

④ Section Deleted

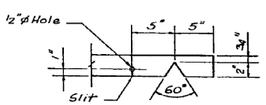

SEAL CUT-OUT (2 1/2")

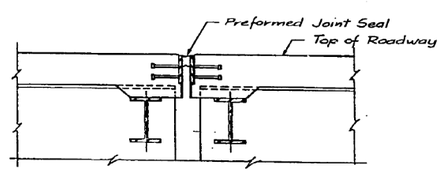

SECTION AT PREFORMED SEAL JOINT

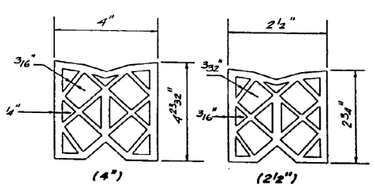

PREFORMED JOINT SEAL

SHEET MD 3 OF 8

REVISIONS	
Name	Date
④ Revision	4-22-88

STATE OF ILLINOIS
DEPARTMENT OF TRANSPORTATION
F.A.I. ROUTE 90/94 (DAN RYAN EXPRESSWAY)
SECTION 1985-080 R - COOK COUNTY
ROADWAY GRADING AND PAVING
MISCELLANEOUS DETAILS - ALL STRUCTURES
PREFORMED JOINT SEAL 2 1/2" & 4"

Scale: NONE — Drawn By: J.R.
Date: AUGUST 14, 1987 — Checked By: H.M.
ENVIROOTHE ENGINEERS INC.
Chicago, Illinois

D160W71-sht-AS-BUILT-23.dgn

USER NAME = dunkerleyb	DESIGNED -	REVISED
	CHECKED -	REVISED
PLOT SCALE = N.T.S.	DRAWN -	REVISED
PLOT DATE = 11/26/2013	CHECKED -	REVISED

STATE OF ILLINOIS
DEPARTMENT OF TRANSPORTATION

EXISTING AS-BUILTS SN 016-1088

SHEET NO. AS-23 OF AS-72 SHEETS

F.A.I. RTE.	SECTION	COUNTY	TOTAL SHEETS	SHEET NO.
90/94/290	2013-036R	COOK	256	165

CONTRACT NO. 60W71

ILLINOIS FED. AID PROJECT -NUMBER-

FOR INFORMATION ONLY

STATE OF ILLINOIS
DEPARTMENT OF TRANSPORTATION

FEDERAL AID ROUTE NO.	SECTION	COUNTY	TOTAL SHEETS	SHEET NO.
I-90/94	*	COOK	79	77

STA. TO STA.
FED. RD. DIST. NO. ILLINOIS FED. AID PROJECT
* 1988-080 R

③ REINFORCEMENT BAR SCHEDULE *

Mark	No.	Size	Length	Shape
S1(E)	16	#5	2'-0"	—
S2(E)	12	#5	[illegible]	—

* Per scupper

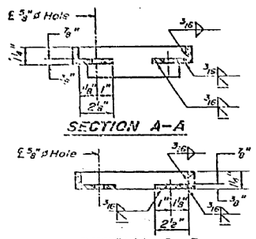

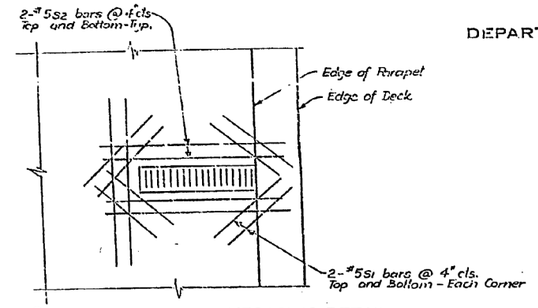

③ SCUPPER DECK REINFORCING DETAIL

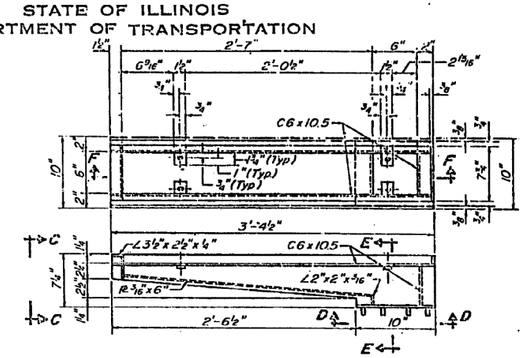

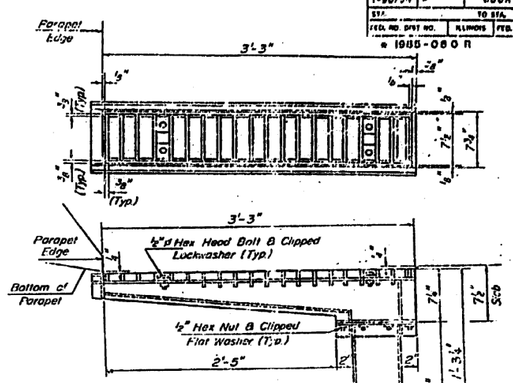

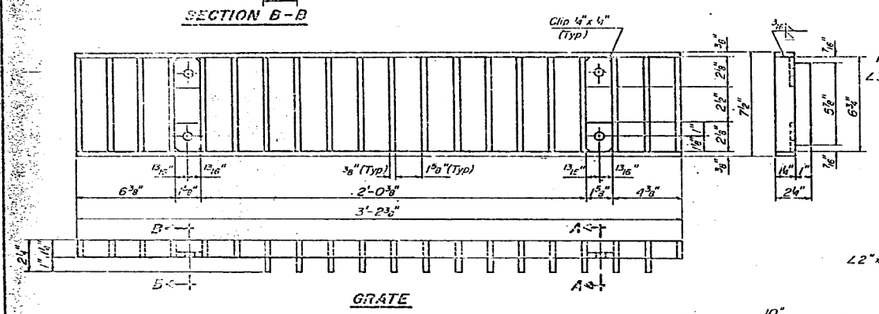

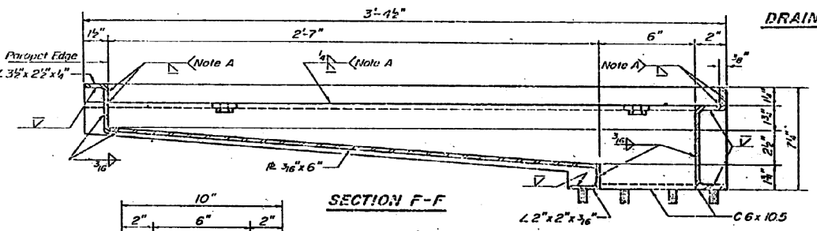

Note A: Surface of welds shall be recessed 1/16" Max. or placed flush with inside face of bars to provide clearance for Grate.

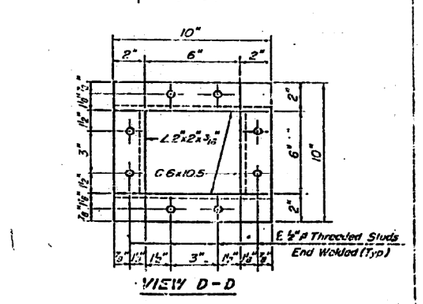

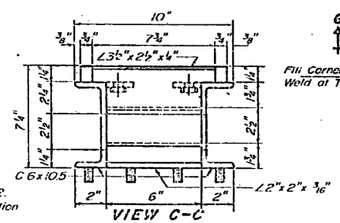

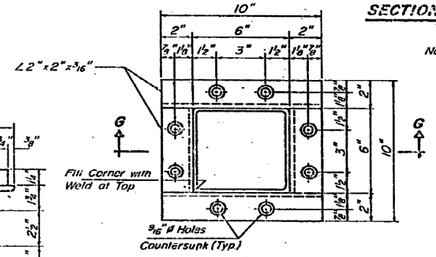

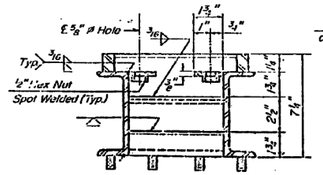

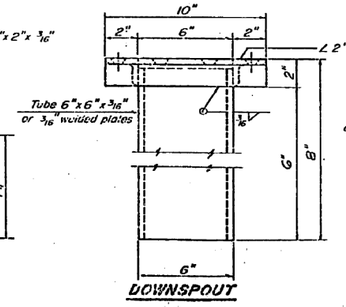

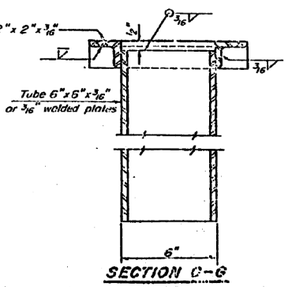

Notes:

Hollow structural steel tubing shall conform to the requirements of A.S.T.M. designation A-500 Grade B, or A-501 Structural Steel Tubing.

All other shapes, plates and bars shall conform to the requirements of A.A.S.H.T.O. M 183.

Bolts, studs, washers and nuts shall conform to the requirements of A.S.T.M. A-307.

The Grate, Frame, and Downspout shall be galvanized after shop fabrication in accordance with A.A.S.H.T.O. M-111 & A.S.T.M. A-385.

All bolts, washers and nuts shall be galvanized in accordance with A.A.S.H.T.O. M 232.

Cost of the Grate, Frame, Downspout, Bolts, Washers and Nuts including complete installation of Scupper shall be paid for at the unit bid price for "DRAINAGE SCUPPERS"

(W.T. to inside of exterior stringer flange shall not be > 3'-11")

BILL OF MATERIAL

ITEM	UNIT	QUANTITY
Drainage Scupper	Each	4

SHEET MD 4 OF 8

REVISIONS

Name	Date
③ Revision	3-11-03

STATE OF ILLINOIS
DEPARTMENT OF TRANSPORTATION
F.A.I. ROUTE 90/94 (DAN RYAN EXPRESSWAY)
SECTION 1988-080R - COOK COUNTY
ROADWAY GRADING AND PAVING
MISCELLANEOUS DETAILS - ALL STRUCTURES
DRAINAGE SCUPPER, STEEL

Scale: NONE Drawn By: REP
Date: AUGUST 14, 1987 Checked By: [illegible]
ENVIRODYNE ENGINEERS INC.

D160W71-sht-AS-BUILT-24.dgn

USER NAME = dunkerleyb	DESIGNED -	REVISED
	CHECKED -	REVISED
PLOT SCALE = N.T.S.	DRAWN -	REVISED
PLOT DATE = 11/26/2013	CHECKED -	REVISED

STATE OF ILLINOIS
DEPARTMENT OF TRANSPORTATION

EXISTING AS-BUILTS SN 016-1088

SHEET NO. AS-24 OF AS-72 SHEETS

F.A.I. RTE.	SECTION	COUNTY	TOTAL SHEETS	SHEET NO.
90/94/290	2013-036R	COOK	256	166

CONTRACT NO. 60W71

ILLINOIS FED. AID PROJECT -NUMBER-

FOR INFORMATION ONLY

STATE OF ILLINOIS
DEPARTMENT OF TRANSPORTATION

ROUTE NO.	SECTION	COUNTY	TOTAL SHEETS	SHEET NO.
I-90/94	"	COOK	74	75
STA.		TO STA.		
FED. RT. FUN. NO.	ILLINOIS	REF. NO. PROJECT		

1985 080 R

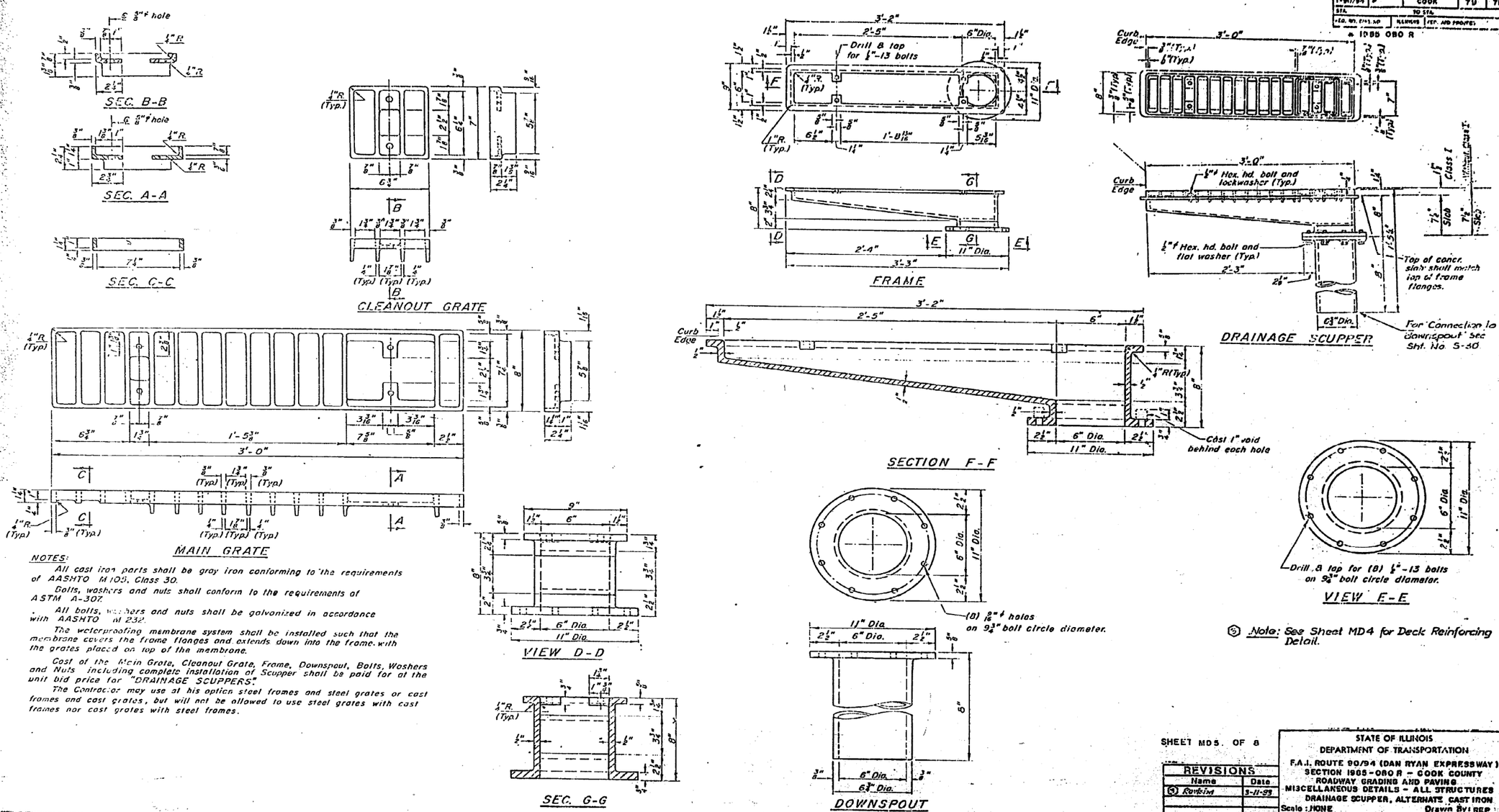

NOTES:

All cast iron parts shall be gray iron conforming to the requirements of AASHTO M 105, Class 30.

Bolts, washers and nuts shall conform to the requirements of ASTM A-307.

All bolts, washers and nuts shall be galvanized in accordance with AASHTO M 232.

The waterproofing membrane system shall be installed such that the membrane covers the frame flanges and extends down into the frame with the grates placed on top of the membrane.

Cost of the Main Grate, Cleanout Grate, Frame, Downspout, Bolts, Washers and Nuts including complete installation of Scupper shall be paid for at the unit bid price for "DRAINAGE SCUPPERS".

The Contractor may use at his option steel frames and steel grates or cast frames and cast grates, but will not be allowed to use steel grates with cast frames nor cast grates with steel frames.

(5) Note: See Sheet MD4 for Deck Reinforcing Detail.

SHEET MD5 OF 8

REVISIONS	
Name	Date
(5) Revision	3-11-93

STATE OF ILLINOIS
DEPARTMENT OF TRANSPORTATION
F.A.I. ROUTE 90/94 (DAN RYAN EXPRESSWAY)
SECTION 1985-080 R - COOK COUNTY
ROADWAY GRADING AND PAVING
MISCELLANEOUS DETAILS - ALL STRUCTURES
DRAINAGE SCUPPER, ALTERNATE CAST IRON
Scale: NONE — Drawn By: REP
Date: AUGUST 14, 1987 — Checked By: WPK
ENVIRODYNE ENGINEERS INC.
Chicago, Illinois

USER NAME = dunkerleyb	DESIGNED -	REVISED	
	CHECKED -	REVISED	
PLOT SCALE = N.T.S.	DRAWN -	REVISED	
PLOT DATE = 11/26/2013	CHECKED -	REVISED	

STATE OF ILLINOIS
DEPARTMENT OF TRANSPORTATION

EXISTING AS-BUILTS SN 016-1088

SHEET NO. AS-25 OF AS-72 SHEETS

F.A.I. RTE.	SECTION	COUNTY	TOTAL SHEETS	SHEET NO.
90/94/290	2013-036R	COOK	256	167

CONTRACT NO. 60W71

ILLINOIS FED. AID PROJECT -NUMBER-

D160W71-sht-AS-BUILT-25.dgn

FOR INFORMATION ONLY

STATE OF ILLINOIS
DEPARTMENT OF TRANSPORTATION

F.A.I. RTE.	SECTION	COUNTY	TOTAL SHEETS	SHEET NO.
90/94	8	COOK	79	79
STA.		TO STA.		
FED. RD. DIST. NO.	ILLINOIS	FED. AID PROJECT		

* 1985-080 R

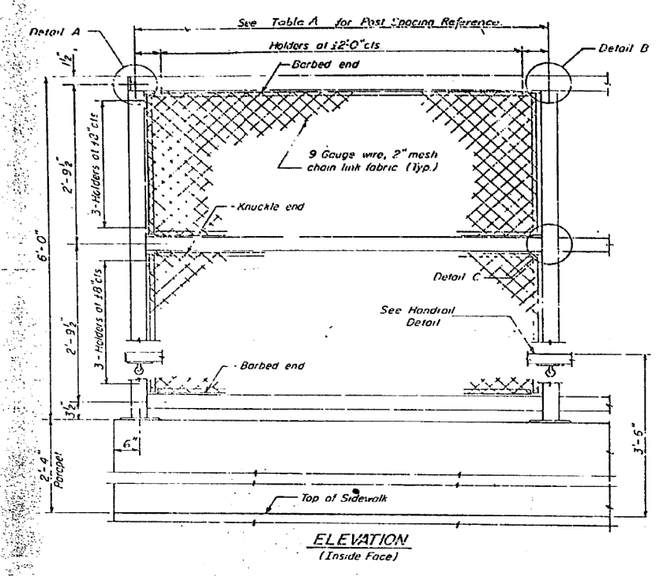

ELEVATION
(Inside Face)

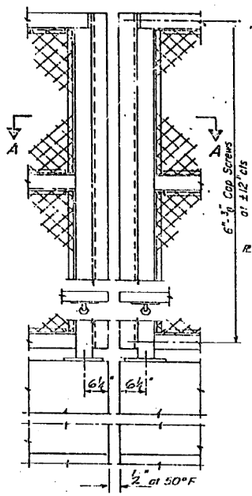

ELEVATION
(At Expansion Joint)

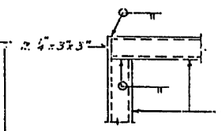

DETAIL A

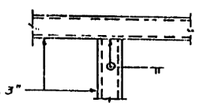

DETAIL B

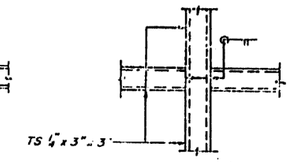

DETAIL C

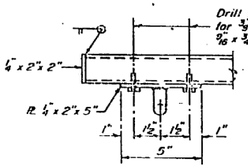

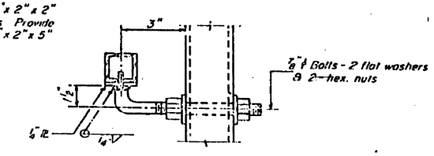

HANDRAIL DETAIL

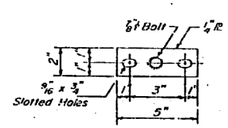

BASE PL
(Handrail)

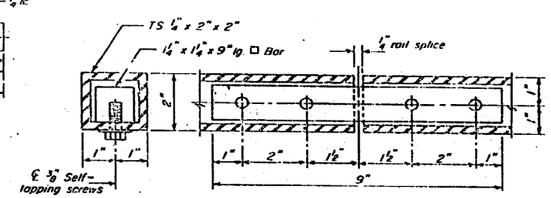

HANDRAIL SPLICE

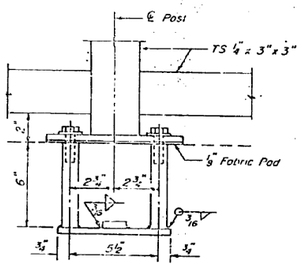

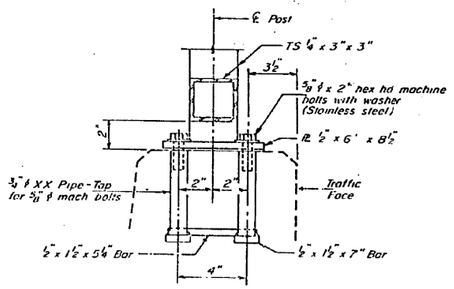

ANCHOR BOLT DETAILS

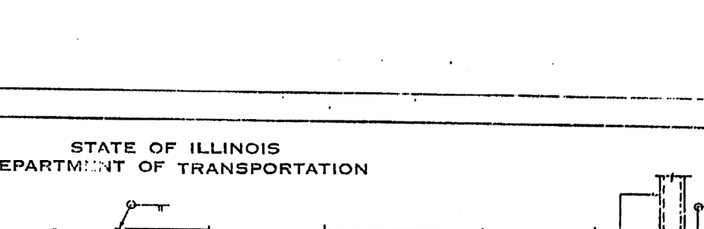

SECTION A-A

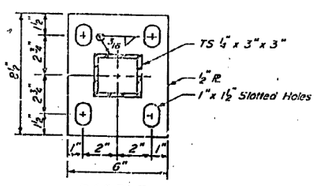

BASE PL

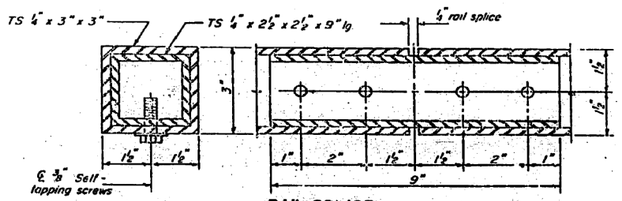

RAIL SPLICE

NOTES

Railing shall be in accordance with Section 306 of the Standard Specifications, except as noted, and shall be paid for at the Contract Unit Price per lineal foot for Pedestrian Railing.

The 9 gauge fabric ties shall be in accordance with Article 710.33(f) of the Standard Specifications.

Installation of the chain link fabric shall be in accordance Section 629 of the Standard Specifications.

Hollow structural steel tubing shall conform to the requirements of ASTM designation A 500, Grade B, structural steel tubing.

All other steel shapes and plates shall conform to the requirements of AASHTO M183.

Notes

All posts, railing, splices, anchor devices and bent plates shall be galvanized after shop fabrication in accordance with AASHTO M-111 and ASTM A-385. All bolts, nuts and washers shall be galvanized in accordance with AASHTO M-232.

Vent holes for galvanizing shall be placed in the posts and rails at locations that will not allow the accumulation of moisture in the members.

The chain link fabric shall conform to the requirements of Article 710.33(a)(1)(2)or(3) of the Std. Specs.

BILL OF MATERIAL

ITEM	UNIT	QUANTITY
Pedestrian Railing	L.F.	877

(3) TABLE A - POST SPACING REFERENCE

STRUCTURE	SEE SHEET No.
Taylor Street Entrance Ramp	ENT 13
Harrison Street over S.B. DAN RYAN EXP.	HAR-5B
Harrison Street over N.B. DAN RYAN EXP.	S-9 & S-15

SHEET NO 6 OF 8

REVISIONS	
Name	Date
(3) Revision	3-11-82

STATE OF ILLINOIS
DEPARTMENT OF TRANSPORTATION
F.A.I. ROUTE 90/94 (DAN RYAN EXPRESSWAY)
SECTION 1985-080 R - COOK COUNTY
ROADWAY GRADING AND PAVING
MISCELLANEOUS DETAILS - ALL STRUCTURES
PEDESTRIAN RAILING - 6'
Scale: NONE
Date: AUGUST 14, 1987
Drawn By: REP
Checked By: W P K
ENVIROTYE ENGINEERS INC.
Chicago, Illinois

USER NAME = dunkerleyb	DESIGNED -	REVISED
	CHECKED -	REVISED
PLOT SCALE = N.T.S.	DRAWN -	REVISED
PLOT DATE = 11/26/2013	CHECKED -	REVISED

STATE OF ILLINOIS
DEPARTMENT OF TRANSPORTATION

EXISTING AS-BUILTS SN 016-1088

SHEET NO. AS-26 OF AS-72 SHEETS

F.A.I. RTE.	SECTION	COUNTY	TOTAL SHEETS	SHEET NO.
90/94/290	2013-036R	COOK	256	168
		CONTRACT NO. 60W71		
		ILLINOIS FED. AID PROJECT -NUMBER-		

D160W71-sht-AS-BUILT-26.dgn

FOR INFORMATION ONLY

F.A.I. RTE.	SECTION	COUNTY	TOTAL SHEETS	SHEET NO.
90/94	B	COOK	79	79A

SECTION 1988-080 R

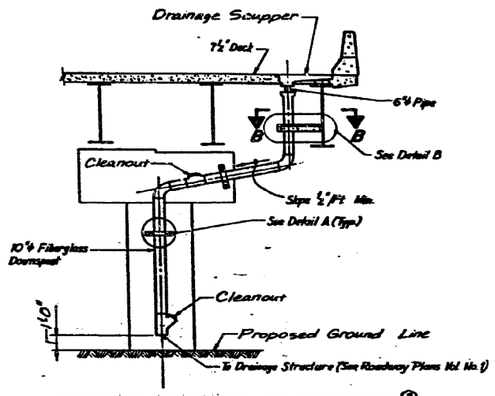

TYPICAL SECTION OF SCUPPERS ⑫ AT PIER LOCATIONS

Taylor St. Exit Ramp Bent No. 4
Taylor St. Entrance Ramp Bent No. 3

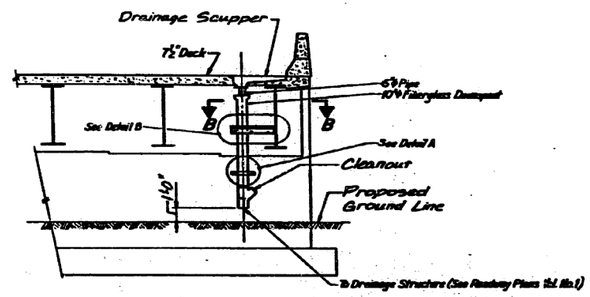

TYPICAL SECTION OF SCUPPERS ⑫ AT ABUTMENT LOCATIONS

Taylor St. Exit Ramp Abutment No. 1
Taylor St. Entrance Ramp Abutment No. 5

⑫ **NOTES:**

1. For Scupper Details, see Sht's MD4 and MD5 in this volume.
2. For Scupper Locations, see Sht's Exit 5 (Taylor St. Exit Ramp) and Exit 4 (Taylor St. Entrance Ramp).

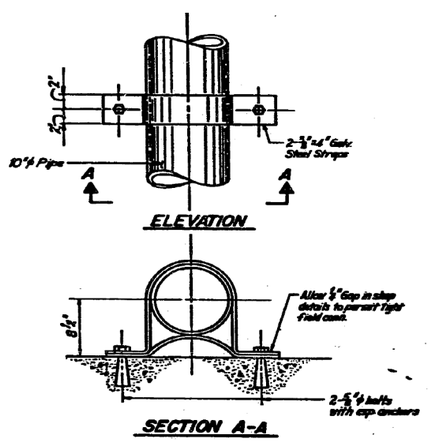

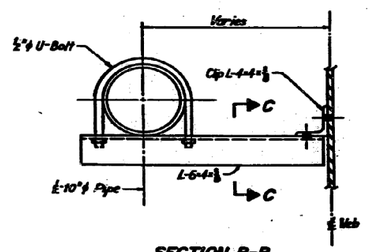

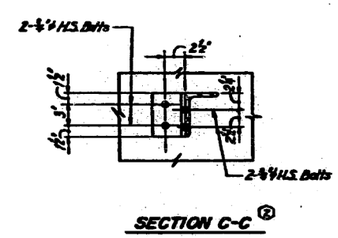

BILL OF MATERIAL

Item	Unit	Quantity		
		Taylor St. Exit	Taylor St. Entrance	Total
Downspout Drainage System	Lin. Ft.	34	33	67

SHEET MD7 OF 7

REVISIONS	
Name	Date
⑫ Annual	2-2-88

⚠ New Sheet-Nov. 23, 1987

STATE OF ILLINOIS
DEPARTMENT OF TRANSPORTATION
F.A.I. ROUTE 90/94 (DAN RYAN EXPRESSWAY)
SECTION 1988-080 R COOK COUNTY
ROADWAY GRADING AND PAVING
DECK DRAINAGE
TYPICAL DETAILS AND SECTIONS
Scale: NONE Drawn By: K.W.T.
Date: AUG. 14, 1987 Checked By: W.R.K.
DAMMOND, RUDOLPH & ASS.
Chicago, Illinois

USER NAME = dunkerleyb	DESIGNED -	REVISED	
	CHECKED -	REVISED	
PLOT SCALE = N.T.S.	DRAWN -	REVISED	
PLOT DATE = 11/26/2013	CHECKED -	REVISED	

STATE OF ILLINOIS
DEPARTMENT OF TRANSPORTATION

EXISTING AS-BUILTS SN 016-1088

SHEET NO. AS-27 OF AS-72 SHEETS

F.A.I. RTE.	SECTION	COUNTY	TOTAL SHEETS	SHEET NO.
90/94/290	2013-036R	COOK	256	169

CONTRACT NO. 60W71

ILLINOIS FED. AID PROJECT -NUMBER-

D160W71-sht-AS-BUILT-27.dgn

FOR INFORMATION ONLY

FEDERAL AID ROUTE NO.	SECTION	COUNTY	TOTAL SHEETS	SHEET NO.
90/94	*	COOK	79	79B
STA.		TO STA.		
FED. RD. DIST. NO.	ILLINOIS	FED. AID PROJECT		

* 1985-080 R

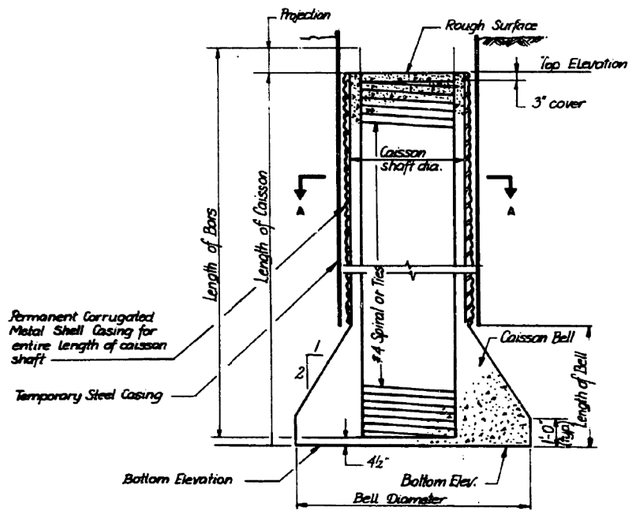

CAISSON SECTION

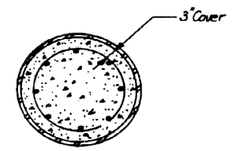

SECTION A-A

(Temporary Steel Casing not shown in section A-A)

Notes:

1.) Specific details for caissons as shown in the caisson section can be found on the following sheets:

Sheet Exit 12 for Taylor Street Exit Ramp Bent Nos. 3 & 4
Sheet ENT 12 for Taylor Street Entrance Ramp Bent Nos. 1 & 2
Sheet ENT 13 for Taylor Street Entrance Ramp Bent Nos. 3 & 4
Sheet S4 for Harrison Street Bridge Pier Nos 1 & 2
Sheet EN 2 for Ramp E-N Pier Nos. 27 & 28

2.) Annular space between the temporary casing and permanent metal shell shall be back filled with grout before removing the temporary casing.

SHEET MD 8 OF 8

REVISIONS	
Name	Date

STATE OF ILLINOIS
DEPARTMENT OF TRANSPORTATION
F.A.I. ROUTE 90/94 (DAN RYAN EXPRESSWAY)
SECTION 1985-080 R - COOK COUNTY
ROADWAY GRADING AND PAVING
MISCELLANEOUS DETAILS - ALL STRUCTURES
TYPICAL CAISSON DETAILS

Scale: NONE
Date: AUG. 14, 1987
Drawn By: D. S.
Checked By: W.P.K.

ENVIRODYNE ENGINEERS INC.
Chicago, Illinois

△2 New sheet 12-7-87

D160W71-sht-AS-BUILT-28.dgn

USER NAME = dunkerleyb	DESIGNED -	REVISED	
	CHECKED -	REVISED	
PLOT SCALE = N.T.S.	DRAWN -	REVISED	
PLOT DATE = 11/26/2013	CHECKED -	REVISED	

STATE OF ILLINOIS
DEPARTMENT OF TRANSPORTATION

EXISTING AS-BUILTS SN 016-1088

SHEET NO. AS-28 OF AS-72 SHEETS

F.A.I. RTE.	SECTION	COUNTY	TOTAL SHEETS	SHEET NO.
90/94/290	2013-036R	COOK	256	170
		CONTRACT NO. 60W71		
	ILLINOIS	FED. AID PROJECT -NUMBER-		

FOR INFORMATION ONLY

F.A.I.	SEC.	COUNTY	TOTAL SHEETS	SHEET NO.
4 (5-2626.2-1B)		COOK	70	1

STATE OF ILLINOIS
CITY OF CHICAGO
DEPARTMENT OF PUBLIC WORKS
BUREAU OF ENGINEERING

SOUTH ROUTE SUPERHIGHWAY

PLANS FOR HARRISON STREET BRIDGE SECTION S-2626.2-1B

F. A. I. ROUTE NO. 4 PROJECT I-04-8(91)

INDEX OF SHEETS

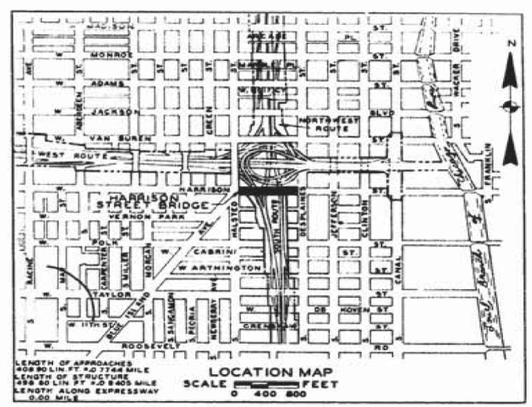

LOCATION MAP
SCALE FEET
0 400 800

SUMMARY OF QUANTITIES

ITEM NO.	UNIT	QUANTITY	DESCRIPTION
1	CU. YD.	63,000	SPECIAL EXCAVATION
2	CU. YD.	620	CLASS A EXCAVATION FOR STRUCTURES
3	TON	5,500	POROUS GRANULAR EMBANKMENT
4	CU. YD.	2,700	TRENCH BACKFILL
5	CU. YD.	3,250	CLASS X CONCRETE
6	LB.	1,000,000	REINFORCEMENT BARS
7	SQ. YD.	1,350	PAVEMENT FABRIC
8	LB.	675,000	STRUCTURAL STEEL
9	CU. FT.	56,000	SUB-PIER SHAFTS
10	CU. FT.	2,800	SUB-PIER BELLS
11	SQ. YD.	4,600	PORTLAND CEMENT CONCRETE PAVEMENT, 8-INCH
12	SQ. YD.	700	SLOPE WALL
13	SQ. YD.	2,475	PORTLAND CEMENT CONCRETE BASE COURSE, 9-INCH
14	SQ. YD.	720	PORTLAND CEMENT CONCRETE BASE COURSE, APPROACH SLABS
15	SQ. FT.	9,250	PORTLAND CEMENT CONCRETE SIDEWALK
16	SQ. FT.	1,400	LONGITUDINAL CURB EXPANSION JOINTS
17	LIN. FT.	1,225	CONCRETE CURB AND GUTTER, TYPE 3
18	LIN. FT.	1,600	CONCRETE CURB, TYPE 4
19	LIN. FT.	30	SPECIAL GUTTER
20	GAL.	600	BITUMINOUS MATERIALS (PRIME COAT)
21	TON	400	BITUMINOUS CONCRETE BINDER COURSE
22	TON	410	BITUMINOUS CONCRETE SURFACE COURSE, FINE DENSE-GRADED
			AGGREGATE, TYPE, SUBCLASS I-11
23	LIN. FT.	960	ALUMINUM RAILING
24	LIN. FT.	730	PIPE HANDRAIL
25	LIN. FT.	210	PEDESTRIAN BARRIER
26	LIN. FT.	3,200	3 1/2-INCH ASBESTOS-CEMENT CONDUIT, WITH HANGERS
27	LIN. FT.	1,600	3 1/2-INCH ASBESTOS-CEMENT CONDUIT, ENCASED
28	LIN. FT.	1,200	2 1/2-INCH STEEL CONDUIT
29	EACH	4	INLETS
30	EACH	2	CATCH BASINS, TYPE A, 4 FT. DIA.
31	EACH	2	CATCH BASIN "Y"
32	EACH	1	MANHOLES, TYPE A, 3 FT. DIA.
33	EACH	2	MANHOLES, TYPE A, 4 FT. DIA.
34	EACH	3	MANHOLES "X"
35	LUMP SUM	—	MANHOLE "Z"
36	LUMP SUM	—	JUNCTION MANHOLE
37	LUMP SUM	—	SPECIAL MANHOLE
38	EACH	5	MANHOLES TO BE ADJUSTED
39	EACH	8	CATCH BASINS TO BE ADJUSTED
40	EACH	3	FILLING EXISTING INLETS
41	EACH	3	FILLING EXISTING CATCH BASINS
42	LB.	4,500	MISCELLANEOUS IRON CASTINGS
43	LIN. FT.	80	STORM SEWERS, TYPE 2, 8-INCH (CAST IRON)
44	LIN. FT.	85	STORM SEWERS, TYPE 2, 8-INCH
45	LIN. FT.	125	STORM SEWERS, TYPE 2, 12-INCH (CAST IRON)
46	LIN. FT.	170	STORM SEWERS, TYPE 3, 18-INCH (CAST IRON)
47			THERE IS NO ITEM 47
48	LIN. FT.	225	STORM SEWERS, TYPE 3, 24-INCH
49	LIN. FT.	550	60-INCH REINFORCED CONCRETE PIPE SEWER
50	M. FT. B.M.	7	MISCELLANEOUS TIMBER
51	LIN. FT.	100	STEEL PLATE BEAM GUARD RAIL
52	EACH	2	NAME PLATES
53	LUMP SUM	—	LANDSCAPING
54	MONTH	12	PUMPING

CONVENTIONAL SIGNS

STRUCTURES IN CONTRACT

- LONGITUDINAL METAL JOINT FOR PAVEMENT
- CONSTRUCTION JOINT FOR PAVEMENT
- EXISTING SIDEWALK AND PAVEMENT TO BE REMOVED
- ELEVATION AT TOP OF CURB
- ELEVATION AT EDGE OF PAVEMENT
- STORM SEWER CONNECTION
- MANHOLE EXISTING
- MANHOLE TO BE ADJUSTED
- CATCH BASIN EXISTING
- CATCH BASIN TO BE ADJUSTED
- INLET TO BE FILLED
- INLET EXISTING
- INLET TO BE CONSTRUCTED
- CATCH BASIN TO BE CONSTRUCTED
- MANHOLE TO BE CONSTRUCTED
- CATCH BASIN TO BE FILLED

STRUCTURES NOT IN CONTRACT

- C CITY ELECTRICAL MANHOLE
- E COMMONWEALTH EDISON CO MANHOLE
- W CITY WATER MANHOLE
- T ILLINOIS BELL TELEPHONE CO. MANHOLE
- R C.T.A. SURFACE LINE MANHOLE
- TRAFFIC LIGHT
- LIGHT STANDARD
- FIRE HYDRANT

APPROVED AS TO SEWER ALTERATIONS AND ADDITIONS
CHIEF ENGINEER OF SEWERS
DIRECTOR OF WATER
DIRECTOR FOR SEWERS

CITY OF CHICAGO
DEPARTMENT OF PUBLIC WORKS
BUREAU OF ENGINEERING
DATE JULY 29, 1958
APPROVED — CHIEF SUBWAY AND HIGHWAY ENGINEER
APPROVED — ASSISTANT CHIEF ENGINEER
APPROVED — CHIEF ENGINEER
APPROVED — COMMISSIONER

DEPARTMENT OF COMMERCE
BUREAU OF PUBLIC ROADS
APPROVED [redacted] 19[redacted]
DISTRICT ENGINEER DATE

THE DEPARTMENT OF
PUBLIC WORKS AND BUILDINGS
DIVISION OF HIGHWAYS
APPROVED [redacted] 19[redacted]
CHIEF HIGHWAY ENGINEER
APPROVED [redacted] 19[redacted]

SHEET NO. G-1 OF 70 SHEETS

D160W71-sht-AS-BUILT-29.dgn

USER NAME = dunkerleyb	DESIGNED -	REVISED	
	CHECKED -	REVISED	
PLOT SCALE = N.T.S.	DRAWN -	REVISED	
PLOT DATE = 11/26/2013	CHECKED -	REVISED	

STATE OF ILLINOIS
DEPARTMENT OF TRANSPORTATION

EXISTING AS-BUILTS SN 016-1088

SHEET NO. AS-29 OF AS-72 SHEETS

F.A.I. RTE.	SECTION	COUNTY	TOTAL SHEETS	SHEET NO.
90/94/290	2013-036R	COOK	256	171

CONTRACT NO. 60W71

ILLINOIS FED. AID PROJECT -NUMBER-

FOR INFORMATION ONLY

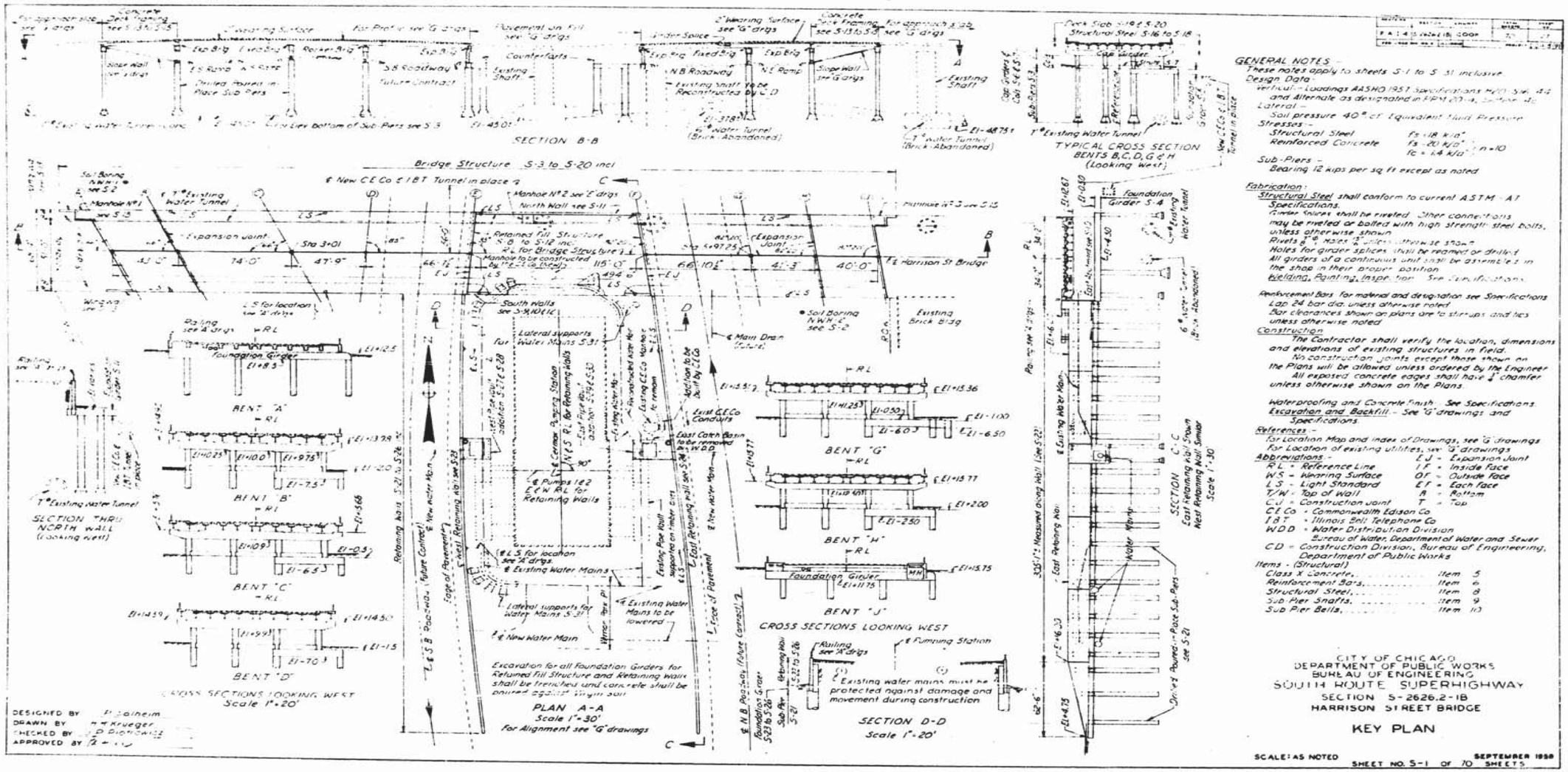

USER NAME = dunkerleyb	DESIGNED -	REVISED	STATE OF ILLINOIS DEPARTMENT OF TRANSPORTATION	EXISTING AS-BUILTS SN 016-1088	F.A.I. RTE.	SECTION	COUNTY	TOTAL SHEETS	SHEET NO.
	CHECKED -	REVISED			90/94/290	2013-036R	COOK	256	172
PLOT SCALE = N.T.S.	DRAWN -	REVISED					CONTRACT NO. 60W71		
PLOT DATE = 11/26/2013	CHECKED -	REVISED		SHEET NO. AS-30 OF AS-72 SHEETS	ILLINOIS	FED. AID PROJECT -NUMBER-			

D160W71-sht-AS-BUILT-30.dgn

FOR INFORMATION ONLY

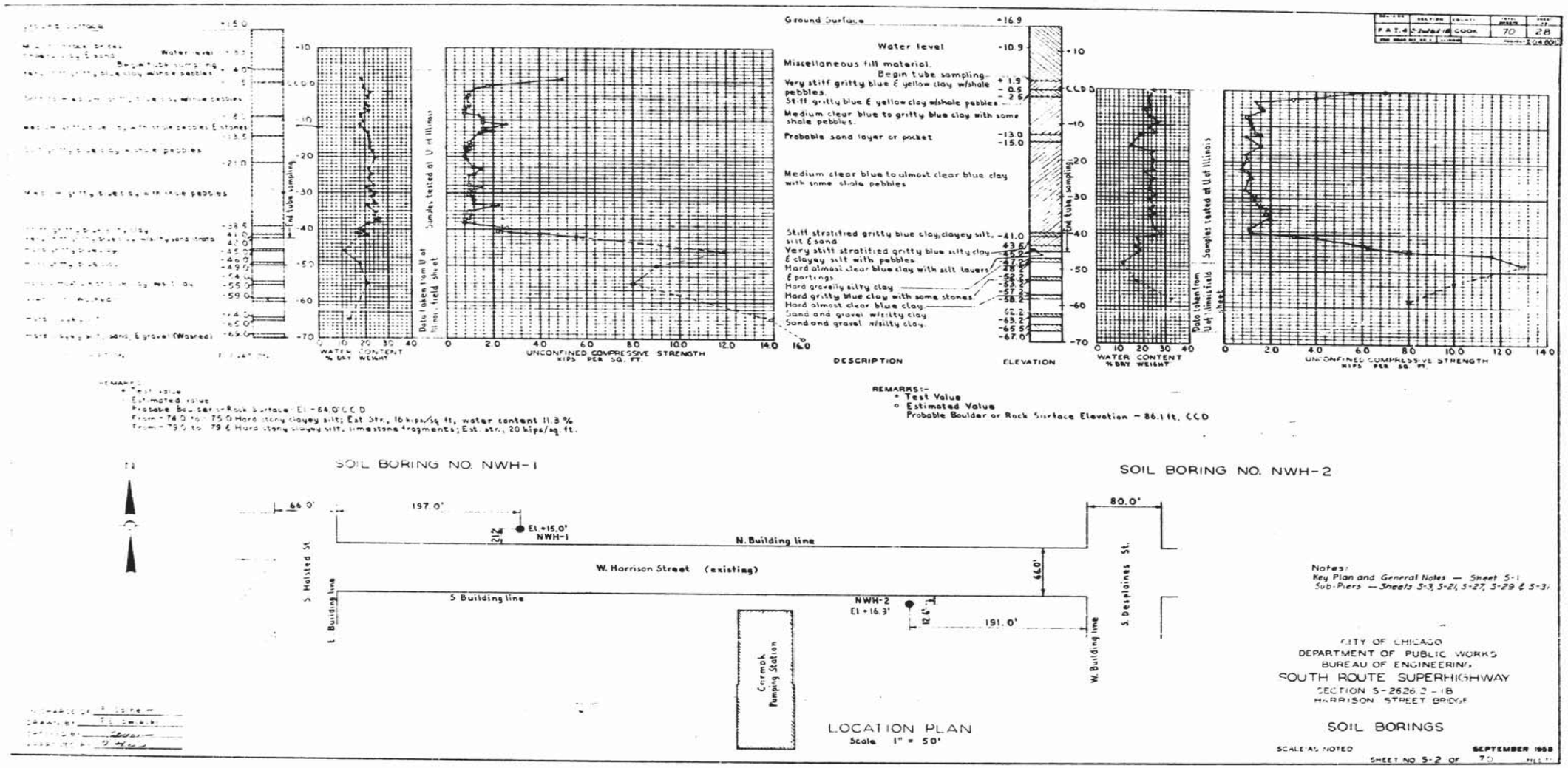

D160W71-sht-AS-BUILT-31.dgn

USER NAME = dunkerleyb	DESIGNED -	REVISED	
	CHECKED -	REVISED	
PLOT SCALE = N.T.S.	DRAWN -	REVISED	
PLOT DATE = 11/26/2013	CHECKED -	REVISED	

STATE OF ILLINOIS
DEPARTMENT OF TRANSPORTATION

EXISTING AS-BUILTS SN 016-1088

SHEET NO. AS-31 OF AS-72 SHEETS

F.A.I. RTE.	SECTION	COUNTY	TOTAL SHEETS	SHEET NO.
90/94/290	2013-036R	COOK	256	173
		CONTRACT NO. 60W71		
	ILLINOIS	FED. AID PROJECT -NUMBER-		

FOR INFORMATION ONLY

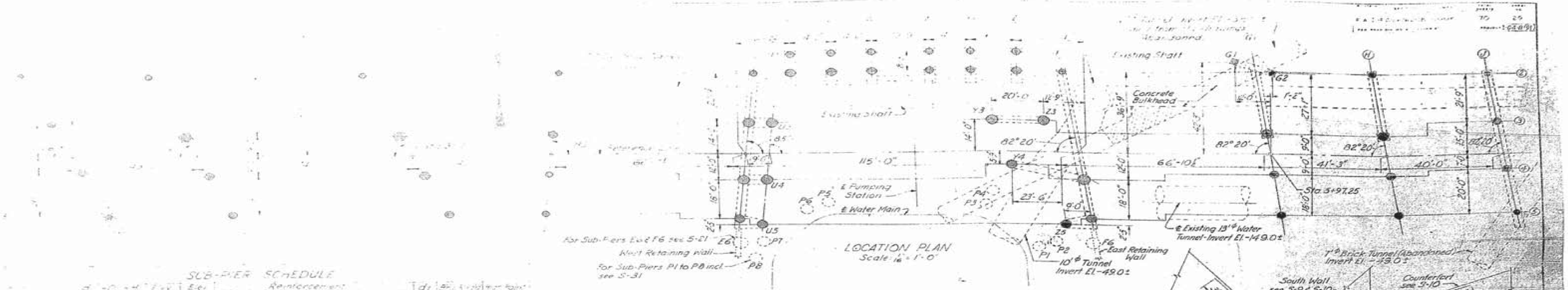

LOCATION PLAN
Scale: 1/16" = 1'-0"

SUB-PIER SCHEDULE

Line	No.	Type	d ft in	D ft in	H ft in	Elev. Top	Elev. Bottom	Reinforcement A bars	B bars	El. X	a ft in	Ties	d1 ft in	[illegible]	Direction
A	[illegible]	[illegible]	2-3	4-[illegible]	1-9	+8.50	-45.0	4-#[illegible]	4-#8	-20.5	[illegible]	#3-15⅝		12	
	[illegible]	[illegible]	2-3	6-9	4-0	+8.50	-45.0	4-#7	5-#9	-20.0	2-6	#3-15⅝		12	
	[illegible]	[illegible]	2-9	5-0	3-3	+8.50	-45.0	4-#9	5-#9	-20.0	2-6	#3-15⅝		12	
	[illegible]	[illegible]	2-3	5-6	3-3	+8.50	-45.0	4-#9	4-#9	-20.0	2-6	#3-15⅝		12	
B	[illegible]	[illegible]	2-6	5-0	2-6	-7.50	-45.0	7-#11	7-#11	-31.5	2-9	#4-18⅝		12	
	[illegible]	[illegible]	3-9	7-6	3-9	-7.50	-45.0	11-#11	12-#11	-31.5	2-9	#4-18⅝		12	
	[illegible]	[illegible]	3-3	6-3	3-3	-2.00	-45.0	9-#11	10-#11	-26.0	2-9	#4-18⅝	2-9	12	
	[illegible]	[illegible]	3-0	5-0	2-6	-2.00	-45.0	8-#11	9-#11	-26.0	2-9	#4-18⅝	2-9	12	
C	[illegible]	[illegible]	2-6	3-9	3-3	-6.50	-45.0	4-#9	4-#9	-26.5	2-6	#3-15⅝		12	
	[illegible]	[illegible]	3-9	9-0	4-3	-6.50	-45.0	6-#11	6-#11	-26.5	2-9	#4-18⅝		12	
	[illegible]	[illegible]	3-6	6-9	3-3	-0.50	-45.0	5-#11	5-#11	-20.5	2-9	#4-18⅝	2-9	12	
	[illegible]	[illegible]	3-0	6-0	3-0	-0.50	-45.0	6-#9	6-#9	-20.5	2-6	#3-15⅝	2-9	12	
D	[illegible]	[illegible]	2-3	5-3	3-0	-7.00	-45.0	4-#8	4-#8	-27.0	2-6	#3-15⅝		12	
	[illegible]	[illegible]	2-[illegible]	7-9	3-0	-7.00	-45.0	3-#11	3-#11	-27.0	2-9	#4-18⅝		12	
	[illegible]	[illegible]	2-6	6-3	3-9	-1.50	-45.0	4-#9	4-#9	-21.5	2-6	#3-15⅝		12	
	[illegible]	[illegible]	2-6	5-6	3-0	-1.50	-45.0	4-#9	4-#9	-21.5	2-6	#3-15⅝		12	
E	[illegible]	[illegible]	2-6	5-0	2-3	-4.00	-45.0	4-#9	4-#9	-24.0	2-6	#3-15⅝		12	North
	3	[illegible]	4-0	8-9	2-9	-4.00	-45.0	8-#11	8-#11	-40.0	2-9	#4-18⅝		12	West
	4	[illegible]	4-0	8-9	4-9	-4.00	-45.0	8-#11	8-#11	-40.0	2-9	#4-18⅝		12	West
	5	[illegible]	3-6	7-0	3-6	-4.00	-45.0	6-#11	6-#11	-40.0	2-9	#4-18⅝		12	West
F	2	[illegible]	2-6	5-6	3-3	-4.50	-45.0	4-#9	4-#9	-24.5	2-6	#3-15⅝		12	North
	4	[illegible]	4-3	9-0	4-9	-4.50	-50.0	10-#11	10-#11	-40.0	2-9	#4-18⅝		12	East
	5	[illegible]	3-[illegible]	6-9	3-3	-4.50	-45.0	6-#11	6-#11	-40.0	2-9	#4-18⅝		12	East
G	[illegible]	[illegible]	2-3	4-0	1-9	-6.50	-45.0	4-#8	4-#8	-26.5	2-6	#3-15⅝		12	
	[illegible]	[illegible]	2-3	4-0	1-[illegible]	-6.50	-45.0	4-#8	4-#8	-26.5	2-6	#3-15⅝		12	
	[illegible]	[illegible]	3-3	6-0	4-9	-6.00	-45.0	4-#[illegible]	5-#11	-26.0	2-9	#4-18⅝		12	
	[illegible]	[illegible]	3-[illegible]	6-9	3-9	-0.50	-45.0	4-#11	4-#11	-20.5	2-9	#4-18⅝	2-9	12	
	[illegible]	[illegible]	2-9	6-3	3-6	-0.50	-45.0	4-#11	4-#11	-20.5	2-9	#4-18⅝		12	
H	[illegible]	[illegible]	2-9	4-3	1-6	-2.50	-45.0	8-#11	8-#11	-22.5	2-9	#4-18⅝		12	
	[illegible]	[illegible]	3-9	6-3	2-[illegible]	-2.50	-45.0	11-#11	12-#11	-22.5	2-9	#4-18⅝		12	
	[illegible]	[illegible]	3-3	5-3	2-[illegible]	+2.00	-45.0	9-#11	10-#11	-20.0	2-9	#4-18⅝	2-6	12	
	[illegible]	[illegible]	3-0	4-9	1-9	+2.00	-45.0	8-#11	9-#11	-20.0	2-9	#4-18⅝	2-6	12	
[illegible]	[illegible]	[illegible]	2-3	4-0	1-9	+11.75	-45.0	4-#8	4-#8	-20.0	2-6	#3-15⅝		12	
	[illegible]	[illegible]	2-9	6-6	3-3	+11.75	-45.0	4-#11	4-#11	-20.0	2-9	#4-18⅝		12	
	[illegible]	[illegible]	2-9	6-0	3-3	+11.75	-45.0	5-#9	5-#9	-20.0	2-6	#3-15⅝		12	
	5	[illegible]	2-3	5-0	2-9	+11.75	-50.0	4-#8	4-#8	-20.0	2-6	#3-15⅝		12	
U	1	II	3-0	4-0	1-0	-3.37	-45.0	8-#11	9-#11	-34.0	3-0	#4-18⅝		10.5	North
	2	III	3-3	5-9	2-0	-3.37	-45.0	18-#11	—	—	3-0	#4-18⅝		Uplift	North
	3	IV	4-0	6-0	2-0	-4.25	-42.0	24-#11	—	—	See Detail	#4-18⅝		Uplift	West
	4	IV	4-0	6-0	2-0	-4.25	-42.0	24-#11	—	—	See Detail	#4-18⅝		Uplift	West
	5	V	3-6	5-6	2-0	-4.25	-42.0	21-#11	—	—	See Detail	#4-18⅝		Uplift	West
V	1	II	2-9	4-[illegible]	1-3	-2.45	-45.0	8-#11	8-#11	-33.0	3-0	#4-18⅝		9	North
	2	III	3-0	5-0	2-0	-2.45	-45.0	17-#11	—	—	3-0	#4-18⅝		Uplift	North
W	1	II	2-9	4-0	1-3	-1.75	-45.0	8-#11	8-#11	-32.0	3-0	#4-18⅝		9	North
	2	III	3-0	5-0	2-0	-1.75	-45.0	17-#11	—	—	3-0	#4-18⅝		Uplift	North
X	1	II	2-9	4-0	1-3	-1.75	-45.0	8-#11	8-#11	-32.0	3-0	#4-18⅝		9	North
	2	III	3-0	5-0	2-0	-1.75	-45.0	17-#11	—	—	3-0	#4-18⅝		Uplift	North
Y	1	II	2-9	4-0	1-3	-1.75	-35.0	8-#11	8-#11	-32.0	3-0	#4-18⅝		9	North
	2	III	3-3	5-0	2-0	-1.75	-45.0	17-#11	—	—	3-0	#4-18⅝		Uplift	North
	3	VI	4-0	6-0	2-0	-3.75	-42.0	24-#11	—	—	See Detail	#4-18⅝		Uplift	East
	4	VI	3-[illegible]	5-3	2-[illegible]	-3.75	-42.0	20-#11	—	—	See Detail	#4-18⅝		Uplift	East
Z	1	II	3-0	4-0	1-0	-2.65	-45.0	8-#11	9-#11	-33.0	3-0	#4-18⅝		10.5	North
	2	III	3-9	5-3	2-0	-2.65	-45.0	18-#11	—	—	3-0	#4-18⅝		Uplift	North
	3	II	4-0	9-0	5-0	-3.75	-50.0	8-#11	8-#11	-40.0	3-0	#4-18⅝		12	East
	5	V	3-6	5-6	2-0	-3.50	-42.0	21-#11	—	—	See Detail	#4-18⅝		Uplift	East

* If required bearing value is not available at elevation shown, increase Bell dimensions D & H per instructions of the Engineer.

DESIGNED BY P. Solheim
DRAWN BY H.H. Krueger
CHECKED BY
APPROVED BY

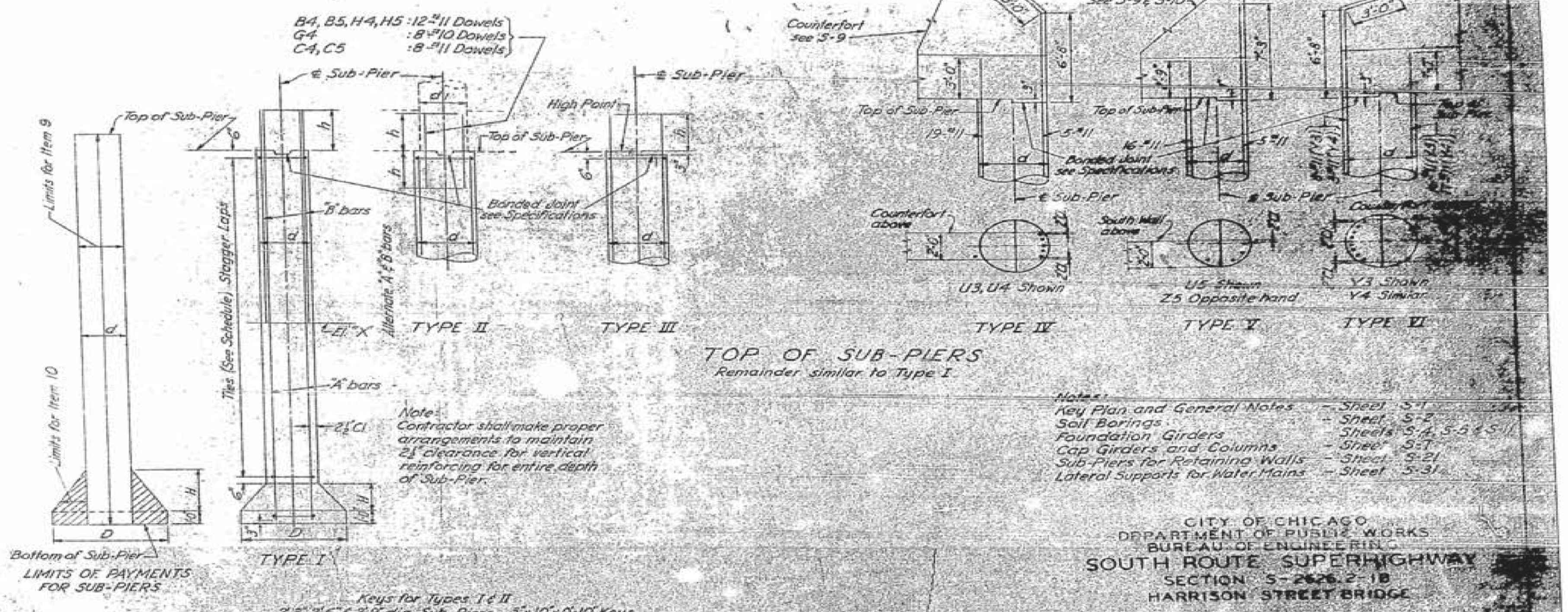

LIMITS OF PAYMENTS FOR SUB-PIERS

TOP OF SUB-PIERS
Remainder similar to Type I

Keys for Types I & II
2'3", 2'6" & 2'9" dia. Sub-Piers – 3"x10"x0'-10" Keys
Remainder – 3"x12"x1'-0" Key

Note:
Contractor shall make proper arrangements to maintain 2½" clearance for vertical reinforcing for entire depth of Sub-Pier.

Notes:
Key Plan and General Notes – Sheet S-1
Soil Borings – Sheet S-2
Foundation Girders – Sheets S-4, S-5 & S-11
Cap Girders and Columns – Sheet S-7
Sub-Piers for Retaining Walls – Sheet S-21
Lateral Supports for Water Mains – Sheet S-31

CITY OF CHICAGO
DEPARTMENT OF PUBLIC WORKS
BUREAU OF ENGINEERING
SOUTH ROUTE SUPERHIGHWAY
SECTION S-2626.2-1B
HARRISON STREET BRIDGE

SUB-PIERS
BRIDGE STRUCTURE

SCALE: AS NOTED
SHEET NO. S-3 OF 70 SHEETS

USER NAME = dunkerleyb	DESIGNED -	REVISED	STATE OF ILLINOIS DEPARTMENT OF TRANSPORTATION	EXISTING AS-BUILTS SN 016-1088	F.A.I. RTE.	SECTION	COUNTY	TOTAL SHEETS	SHEET NO.
	CHECKED -	REVISED			90/94/290	2013-036R	COOK	256	174
PLOT SCALE = N.T.S.	DRAWN -	REVISED					CONTRACT NO. 60W71		
PLOT DATE = 11/26/2013	CHECKED -	REVISED		SHEET NO. AS-32 OF AS-72 SHEETS			ILLINOIS FED. AID PROJECT -NUMBER-		

D160W71-sht-AS-BUILT-32.dgn

FOR INFORMATION ONLY

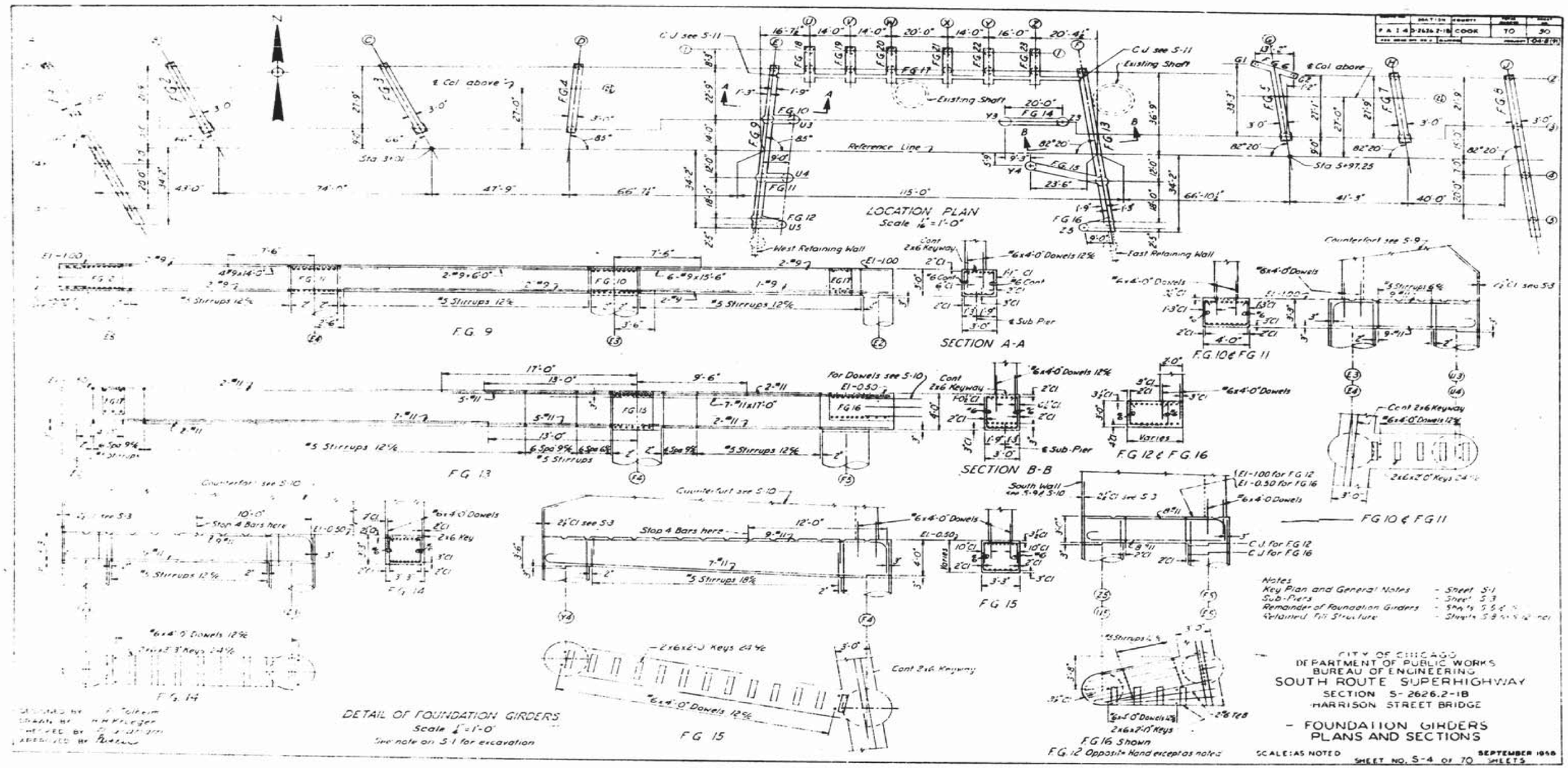

D160W71-sht-AS-BUILT-33.dgn

USER NAME = dunkerleyb	DESIGNED -	REVISED	STATE OF ILLINOIS DEPARTMENT OF TRANSPORTATION	EXISTING AS-BUILTS SN 016-1088	F.A.I. RTE.	SECTION	COUNTY	TOTAL SHEETS	SHEET NO.
	CHECKED -	REVISED			90/94/290	2013-036R	COOK	256	175
PLOT SCALE = N.T.S.	DRAWN -	REVISED			CONTRACT NO. 60W71				
PLOT DATE = 11/26/2013	CHECKED -	REVISED		SHEET NO. AS-33 OF AS-72 SHEETS	ILLINOIS FED. AID PROJECT -NUMBER-				

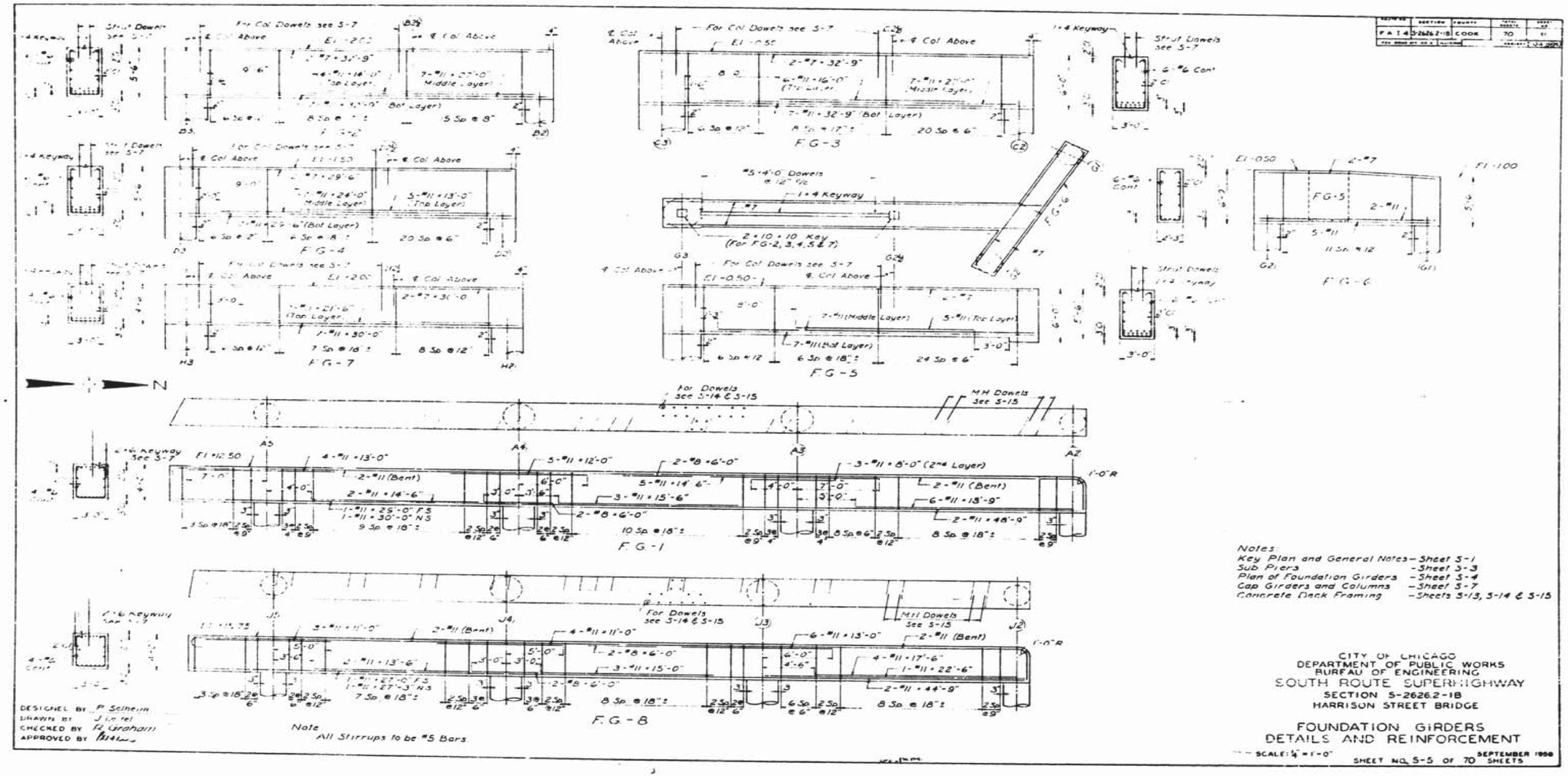

USER NAME = dunkerleyb	DESIGNED -	REVISED
	CHECKED -	REVISED
PLOT SCALE = N.T.S.	DRAWN -	REVISED
PLOT DATE = 11/26/2013	CHECKED -	REVISED

STATE OF ILLINOIS
DEPARTMENT OF TRANSPORTATION

EXISTING AS-BUILTS SN 016-1088

SHEET NO. AS-34 OF AS-72 SHEETS

F.A.I. RTE.	SECTION	COUNTY	TOTAL SHEETS	SHEET NO.
90/94/290	2013-036R	COOK	256	176

CONTRACT NO. 60W71

ILLINOIS FED. AID PROJECT -NUMBER-

D160W71-sht-AS-BUILT-34.dgn

FOR INFORMATION ONLY

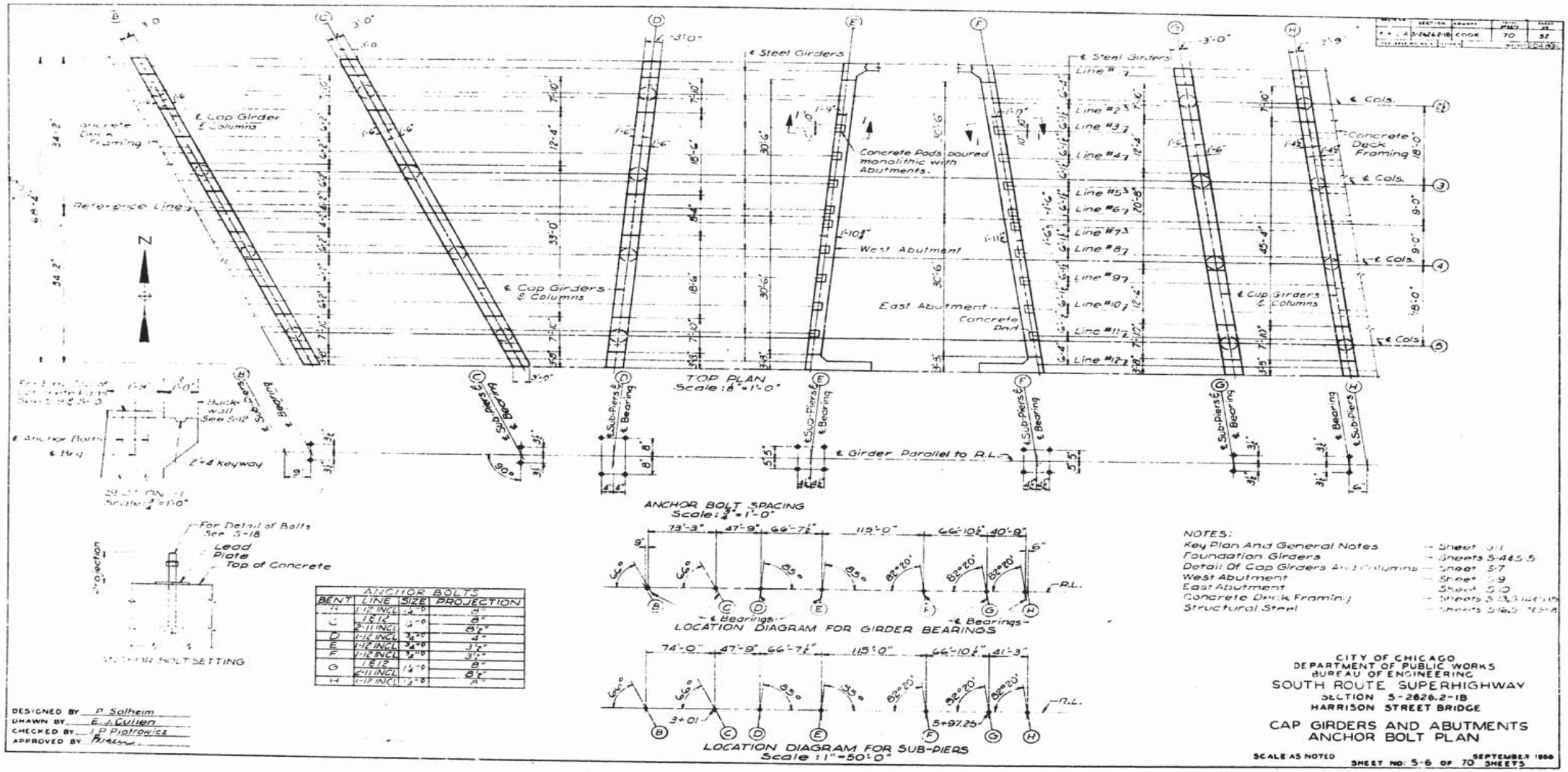

ANCHOR BOLTS			
BENT	LINE	SIZE	PROJECTION
B	1-12 INCL	1¼"ø	8"
C	1 & 12	1¼"ø	8"
	2-11 INCL	1¼"ø	8½"
D	1-12 INCL	3/4"ø	4"
E	1-12 INCL	3/4"ø	3½"
F	1-12 INCL	3/4"ø	3½"
G	1 & 12	1¼"ø	8"
	2-11 INCL	1¼"ø	8½"
H	1-12 INCL	1¼"ø	8"

NOTES:

Key Plan And General Notes	— Sheet 3-1
Foundation Girders	— Sheets S-4 & S-5
Detail Of Cap Girders And Columns	— Sheet S-7
West Abutment	— Sheet S-9
East Abutment	— Sheet S-10
Concrete Deck Framing	— Sheets S-13, S-14 & S-15
Structural Steel	— Sheets S-16.5 & S-16.6

CITY OF CHICAGO
DEPARTMENT OF PUBLIC WORKS
BUREAU OF ENGINEERING
SOUTH ROUTE SUPERHIGHWAY
SECTION 5-2626.2-1B
HARRISON STREET BRIDGE

CAP GIRDERS AND ABUTMENTS
ANCHOR BOLT PLAN

SCALE: AS NOTED — SEPTEMBER 1966
SHEET NO: S-6 OF 70 SHEETS

DESIGNED BY P. Solheim
DRAWN BY E.J. Cullen
CHECKED BY J.P. Piotrowicz
APPROVED BY [illegible]

D160W71-sht-AS-BUILT-35.dgn

USER NAME = dunkerleyb	DESIGNED -	REVISED	
	CHECKED -	REVISED	
PLOT SCALE = N.T.S.	DRAWN -	REVISED	
PLOT DATE = 11/26/2013	CHECKED -	REVISED	

STATE OF ILLINOIS
DEPARTMENT OF TRANSPORTATION

EXISTING AS-BUILTS SN 016-1088

SHEET NO. AS-35 OF AS-72 SHEETS

F.A.I. RTE.	SECTION	COUNTY	TOTAL SHEETS	SHEET NO.
90/94/290	2013-036R	COOK	256	177

CONTRACT NO. 60W71

ILLINOIS FED. AID PROJECT -NUMBER-

FOR INFORMATION ONLY

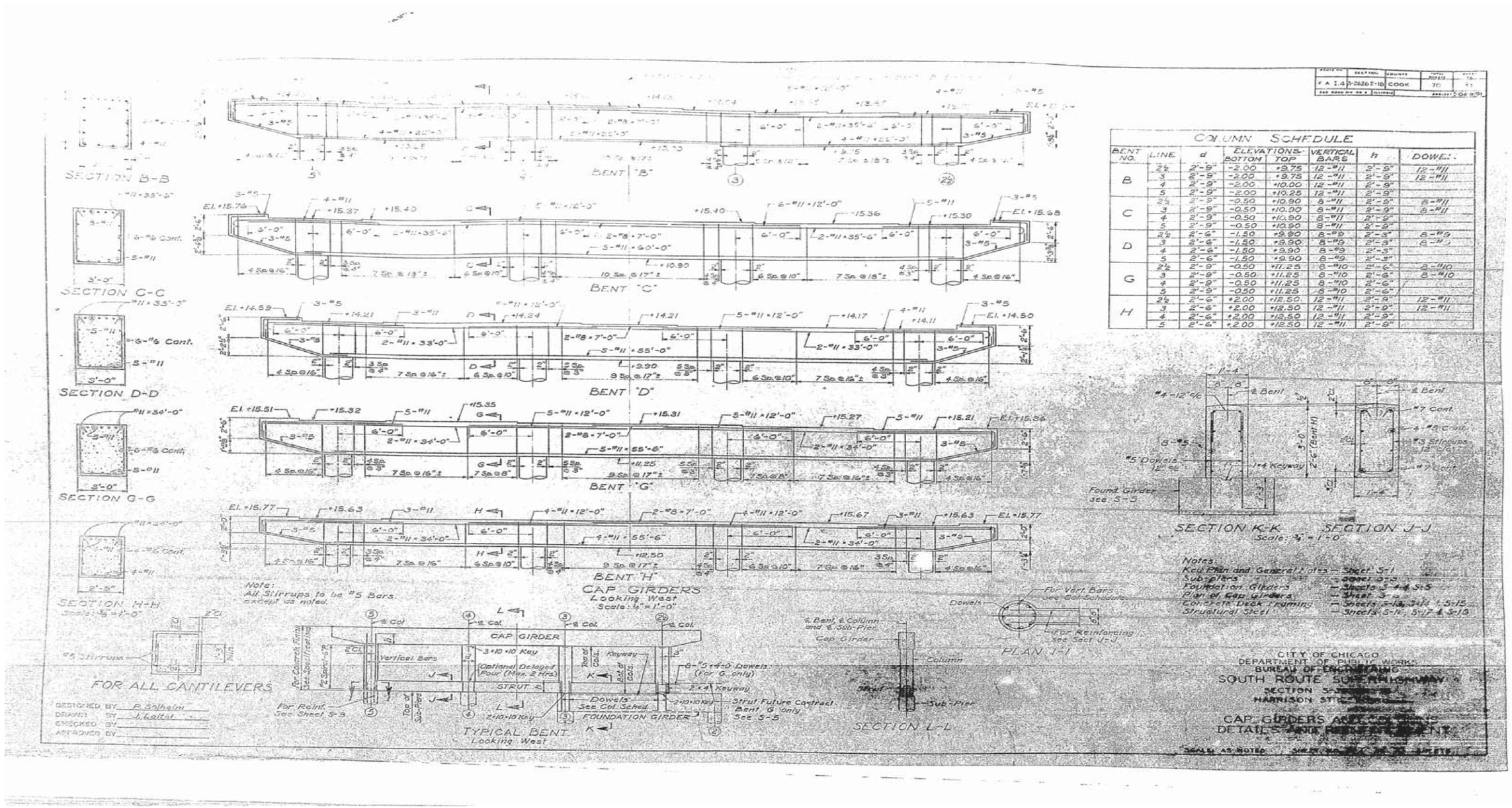

USER NAME = dunkerleyb	DESIGNED -	REVISED	
	CHECKED -	REVISED	
PLOT SCALE = N.T.S.	DRAWN -	REVISED	
PLOT DATE = 11/26/2013	CHECKED -	REVISED	

STATE OF ILLINOIS
DEPARTMENT OF TRANSPORTATION

EXISTING AS-BUILTS SN 016-1088

SHEET NO. AS-36 OF AS-72 SHEETS

F.A.I. RTE.	SECTION	COUNTY	TOTAL SHEETS	SHEET NO.
90/94/290	2013-036R	COOK	256	178

CONTRACT NO. 60W71

ILLINOIS FED. AID PROJECT -NUMBER-

D160W71-sht-AS-BUILT-36.dgn

FOR INFORMATION ONLY

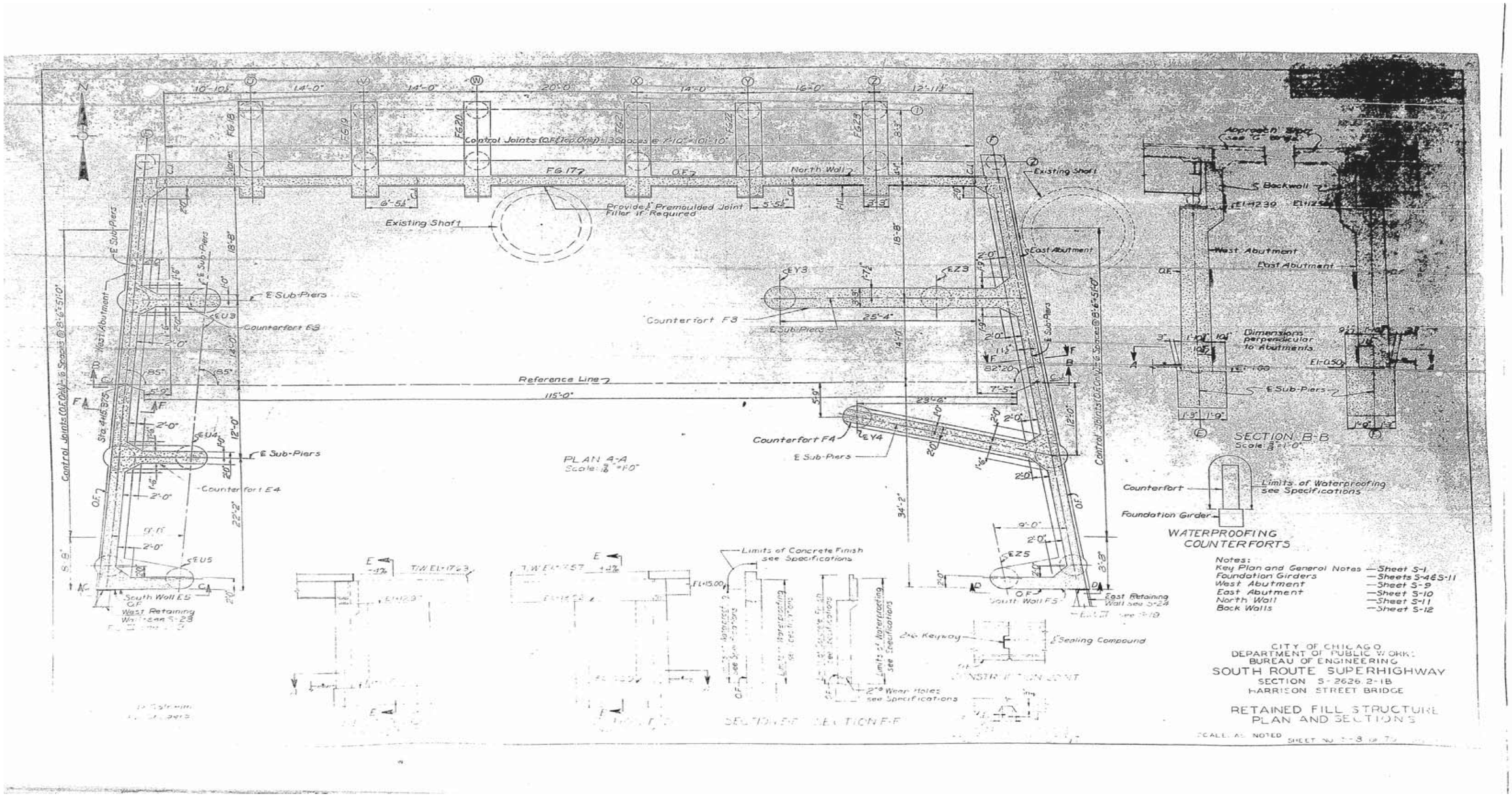

USER NAME = dunkerleyb	DESIGNED -	REVISED	STATE OF ILLINOIS DEPARTMENT OF TRANSPORTATION	EXISTING AS-BUILTS SN 016-1088	F.A.I. RTE.	SECTION	COUNTY	TOTAL SHEETS / SHEET NO.
	CHECKED -	REVISED			90/94/290	2013-036R	COOK	256 / 179
PLOT SCALE = N.T.S.	DRAWN -	REVISED					CONTRACT NO. 60W71	
PLOT DATE = 11/26/2013	CHECKED -	REVISED		SHEET NO. AS-37 OF AS-72 SHEETS		ILLINOIS	FED. AID PROJECT -NUMBER-	

D160W71-sht-AS-BUILT-37.dgn

FOR INFORMATION ONLY

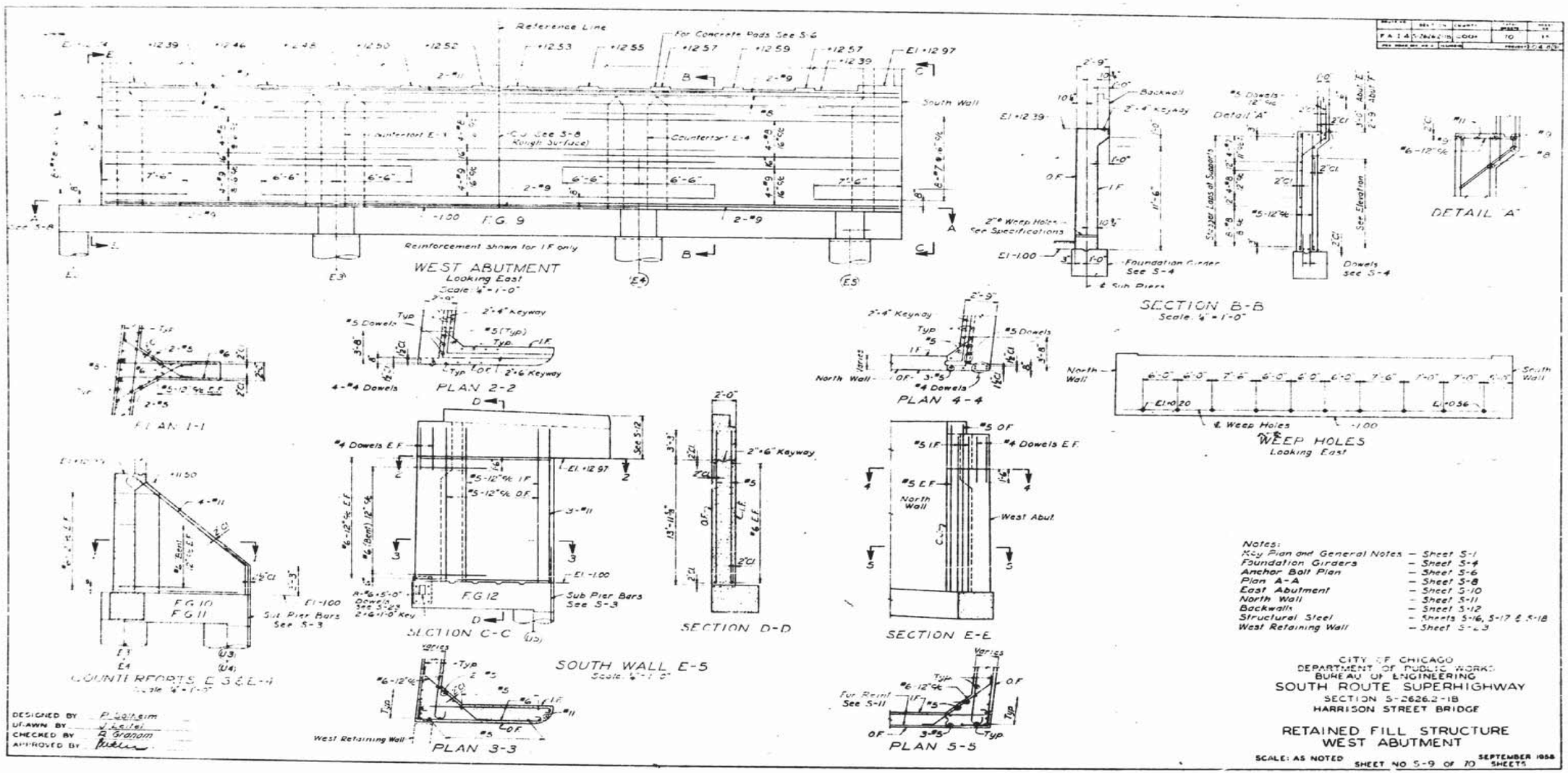

USER NAME = dunkerleyb	DESIGNED -	REVISED
	CHECKED -	REVISED
PLOT SCALE = N.T.S.	DRAWN -	REVISED
PLOT DATE = 11/26/2013	CHECKED -	REVISED

STATE OF ILLINOIS
DEPARTMENT OF TRANSPORTATION

EXISTING AS-BUILTS SN 016-1088

SHEET NO. AS-38 OF AS-72 SHEETS

F.A.I. RTE.	SECTION	COUNTY	TOTAL SHEETS	SHEET NO.
90/94/290	2013-036R	COOK	256	180
		CONTRACT NO. 60W71		
		ILLINOIS FED. AID PROJECT -NUMBER-		

D160W71-sht-AS-BUILT-38.dgn

FOR INFORMATION ONLY

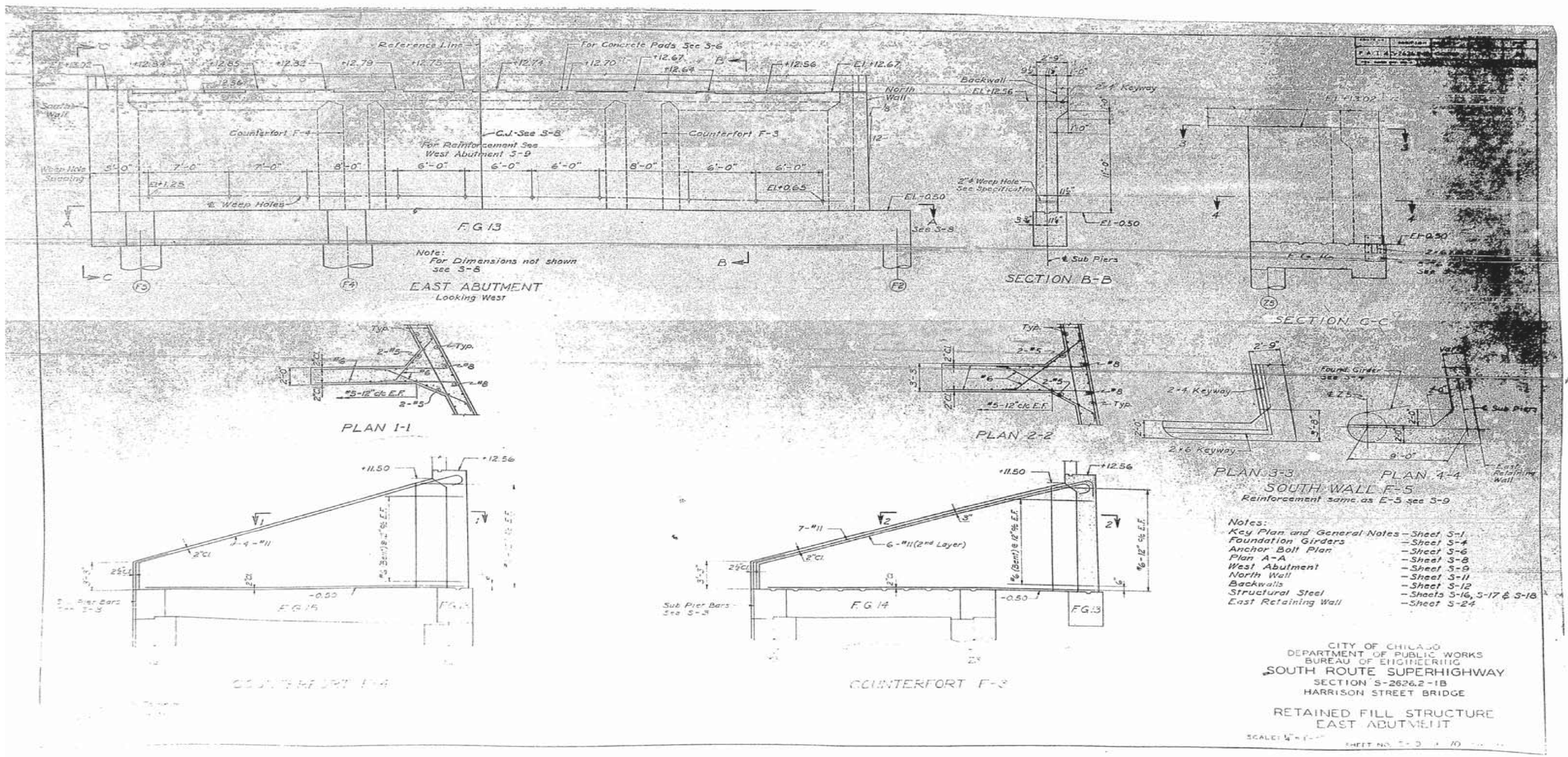

D160W71-sht-AS-BUILT-39.dgn

USER NAME = dunkerleyb	DESIGNED -	REVISED	
	CHECKED -	REVISED	
PLOT SCALE = N.T.S.	DRAWN -	REVISED	
PLOT DATE = 11/26/2013	CHECKED -	REVISED	

STATE OF ILLINOIS
DEPARTMENT OF TRANSPORTATION

EXISTING AS-BUILTS SN 016-1088

SHEET NO. AS-39 OF AS-72 SHEETS

F.A.I. RTE.	SECTION	COUNTY	TOTAL SHEETS	SHEET NO.
90/94/290	2013-036R	COOK	256	181
		CONTRACT NO. 60W71		
	ILLINOIS	FED. AID PROJECT -NUMBER-		

FOR INFORMATION ONLY

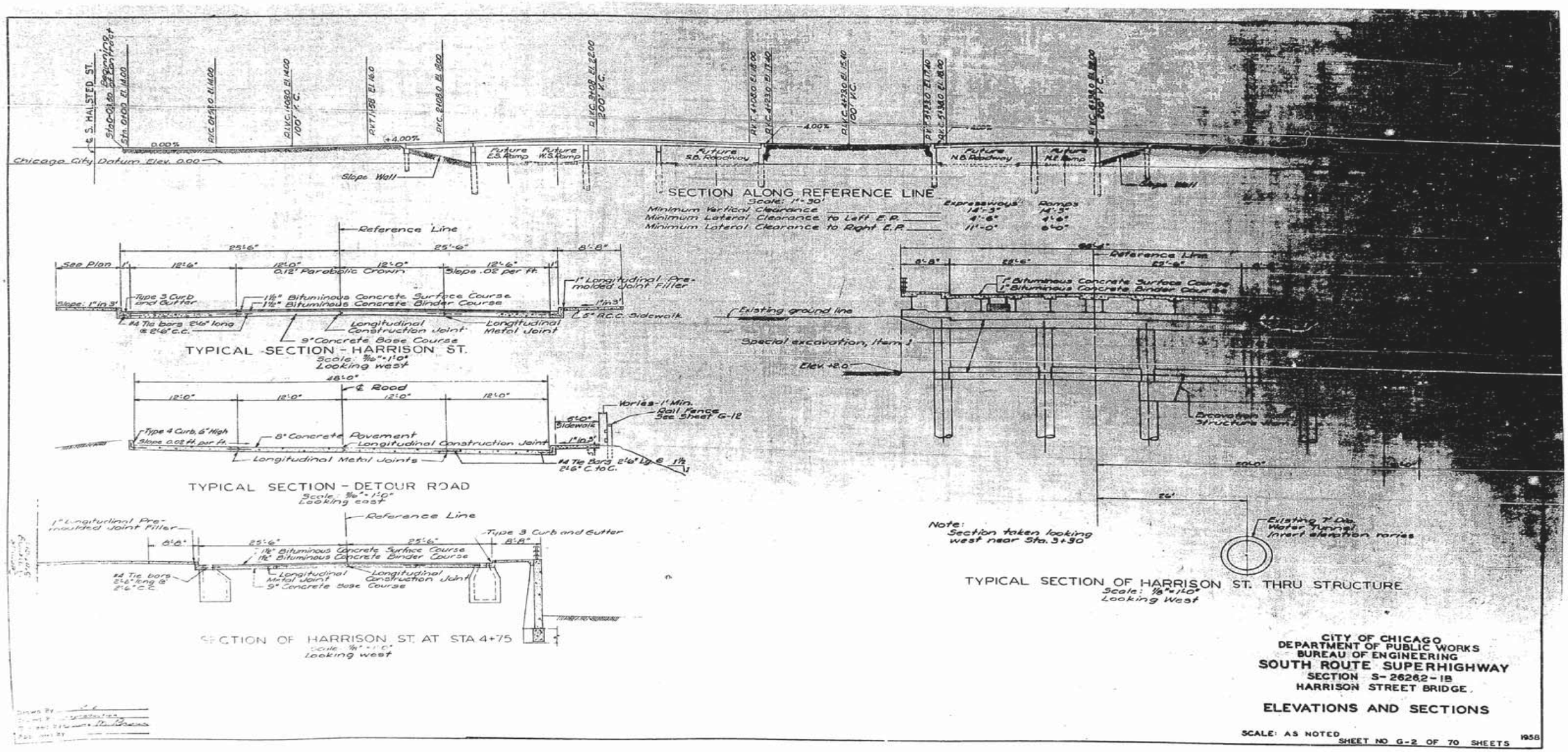

USER NAME = dunkerleyb	DESIGNED -	REVISED	
	CHECKED -	REVISED	
PLOT SCALE = N.T.S.	DRAWN -	REVISED	
PLOT DATE = 11/26/2013	CHECKED -	REVISED	

STATE OF ILLINOIS
DEPARTMENT OF TRANSPORTATION

EXISTING AS-BUILTS SN 016-1088

SHEET NO. AS-40 OF AS-72 SHEETS

F.A.I. RTE.	SECTION	COUNTY	TOTAL SHEETS	SHEET NO.
90/94/290	2013-036R	COOK	256	182

CONTRACT NO. 60W71

ILLINOIS FED. AID PROJECT -NUMBER-

D160W71-sht-AS-BUILT-40.dgn

FOR INFORMATION ONLY

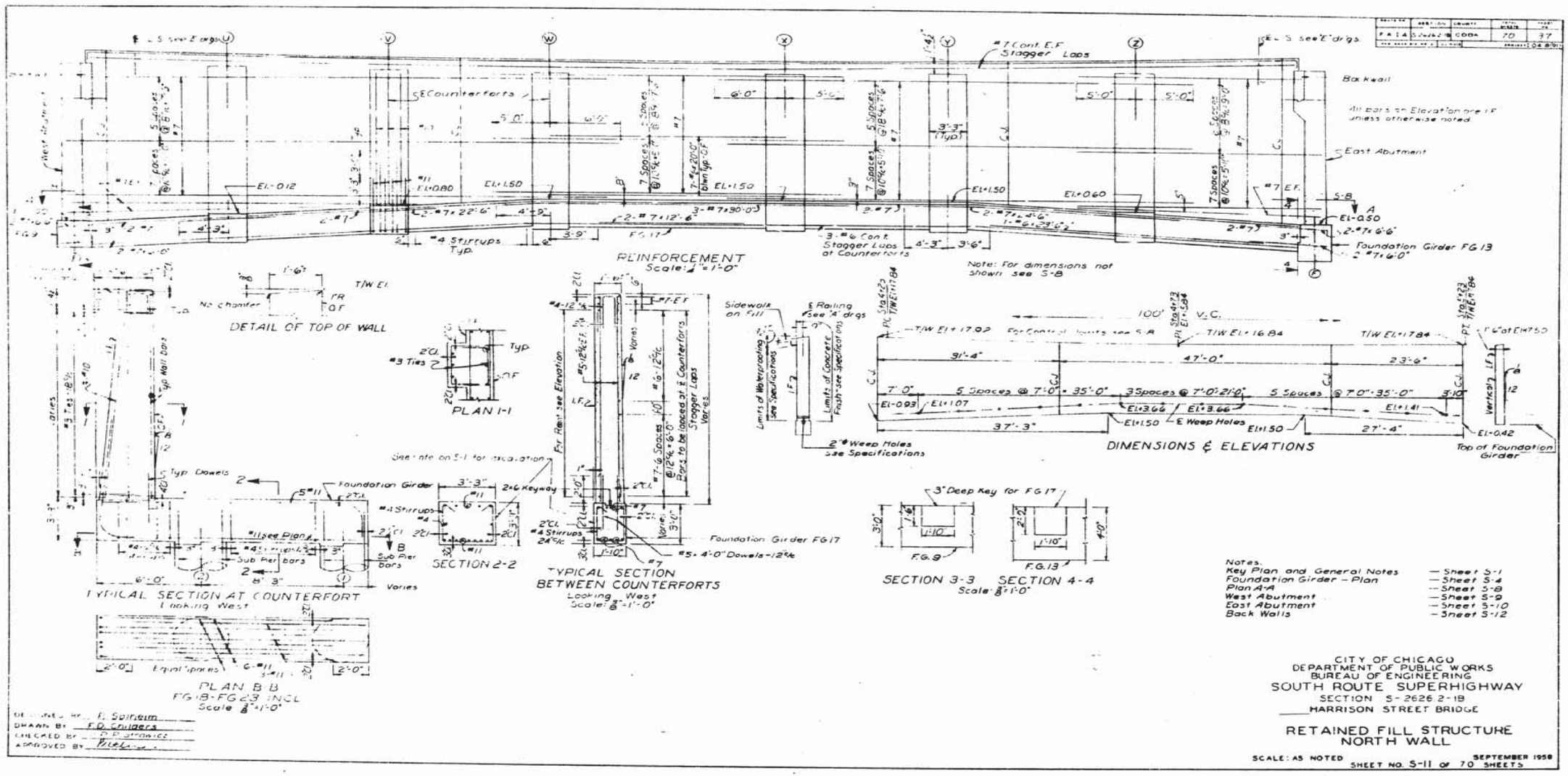

USER NAME = dunkerleyb	DESIGNED -	REVISED	STATE OF ILLINOIS DEPARTMENT OF TRANSPORTATION	EXISTING AS-BUILTS SN 016-1088	F.A.I. RTE.	SECTION	COUNTY	TOTAL SHEETS / SHEET NO.
	CHECKED -	REVISED			90/94/290	2013-036R	COOK	256 / 183
PLOT SCALE = N.T.S.	DRAWN -	REVISED			CONTRACT NO. 60W71			
PLOT DATE = 11/26/2013	CHECKED -	REVISED		SHEET NO. AS-41 OF AS-72 SHEETS	ILLINOIS FED. AID PROJECT -NUMBER-			

D160W71-sht-AS-BUILT-41.dgn

FOR INFORMATION ONLY

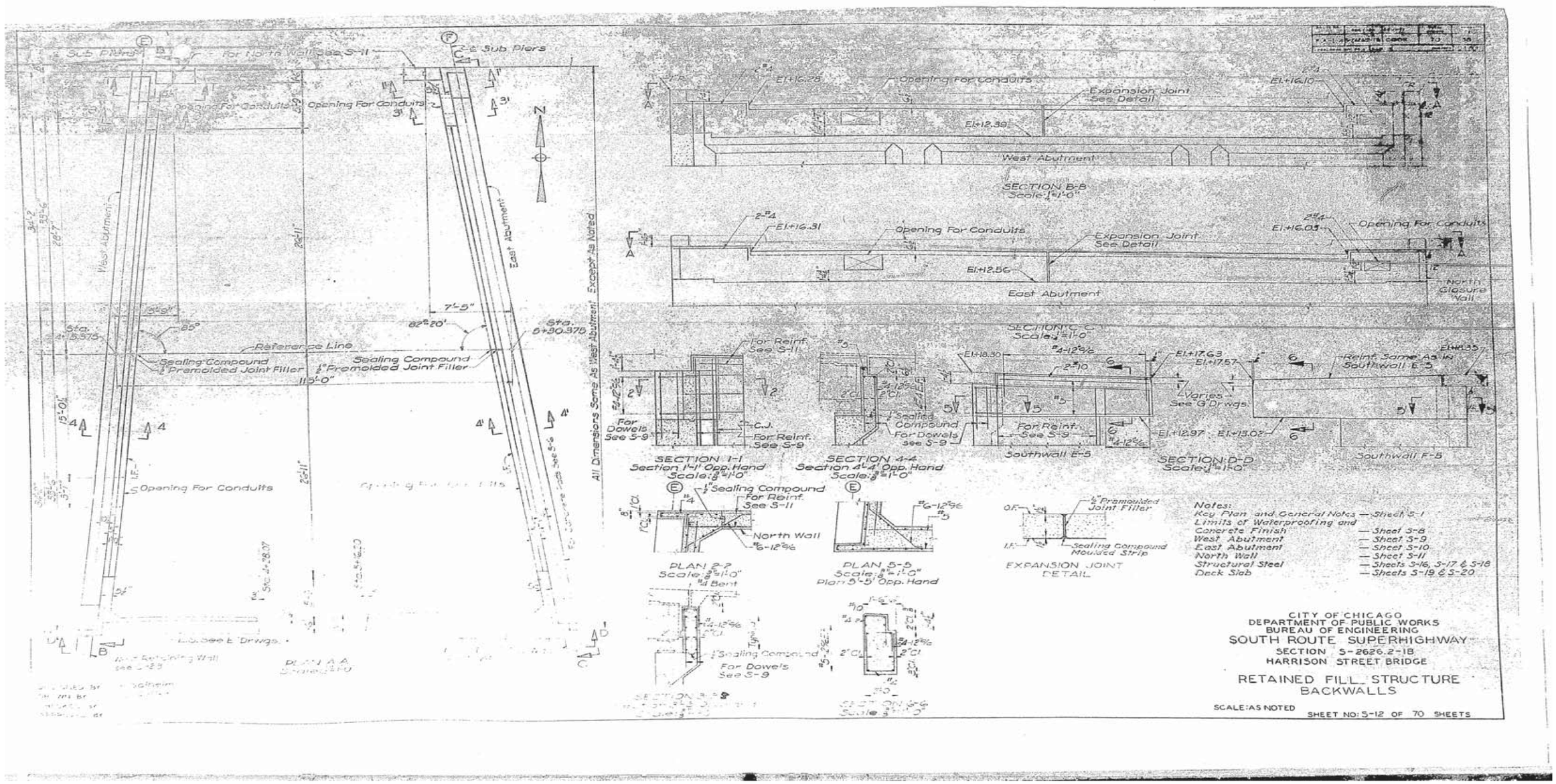

D160W71-sht-AS-BUILT-42.dgn

USER NAME = dunkerleyb	DESIGNED -	REVISED	
	CHECKED -	REVISED	
PLOT SCALE = N.T.S.	DRAWN -	REVISED	
PLOT DATE = 11/26/2013	CHECKED -	REVISED	

STATE OF ILLINOIS
DEPARTMENT OF TRANSPORTATION

EXISTING AS-BUILTS SN 016-1088

SHEET NO. AS-42 OF AS-72 SHEETS

F.A.I. RTE.	SECTION	COUNTY	TOTAL SHEETS	SHEET NO.
90/94/290	2013-036R	COOK	256	184
		CONTRACT NO. 60W71		
	ILLINOIS	FED. AID PROJECT -NUMBER-		

FOR INFORMATION ONLY

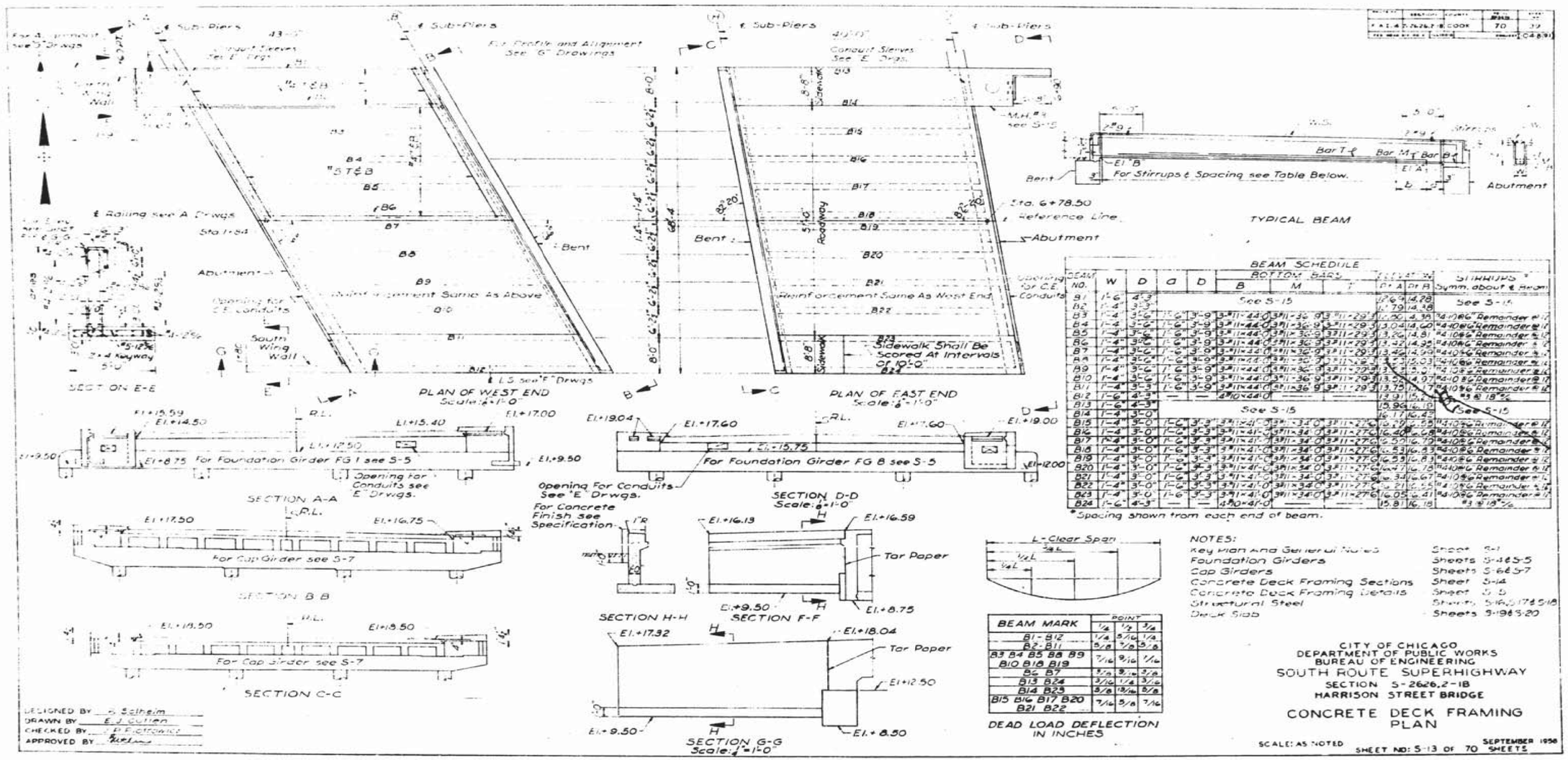

USER NAME = dunkerleyb	DESIGNED -	REVISED
	CHECKED -	REVISED
PLOT SCALE = N.T.S.	DRAWN -	REVISED
PLOT DATE = 11/26/2013	CHECKED -	REVISED

STATE OF ILLINOIS
DEPARTMENT OF TRANSPORTATION

EXISTING AS-BUILTS SN 016-1088

SHEET NO. AS-43 OF AS-72 SHEETS

F.A.I. RTE.	SECTION	COUNTY	TOTAL SHEETS	SHEET NO.
90/94/290	2013-036R	COOK	256	185

CONTRACT NO. 60W71

ILLINOIS FED. AID PROJECT -NUMBER-

D160W71-sht-AS-BUILT-43.dgn

FOR INFORMATION ONLY

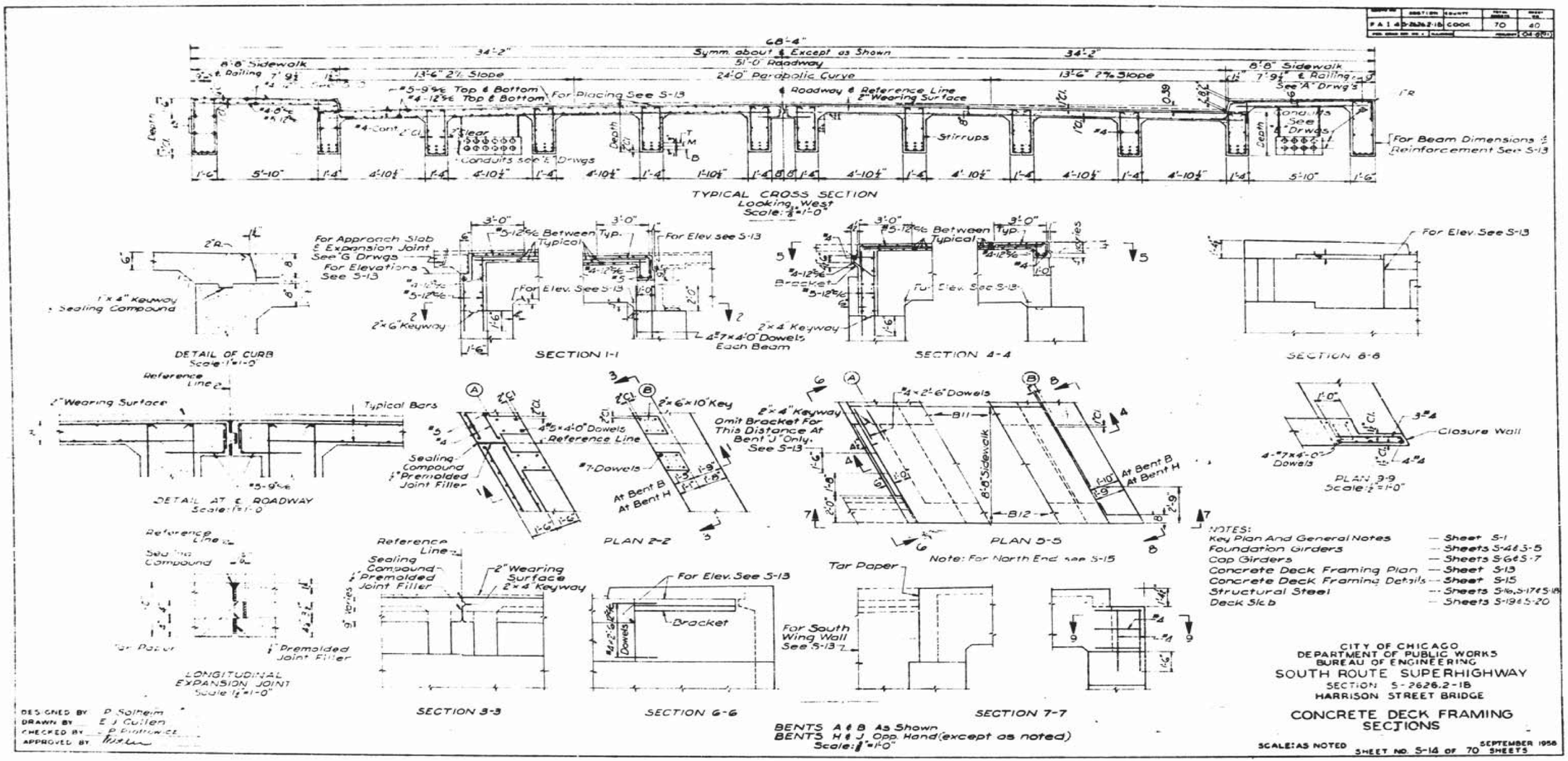

D160W71-sht-AS-BUILT-44.dgn

USER NAME = dunkerleyb	DESIGNED -	REVISED	
	CHECKED -	REVISED	
PLOT SCALE = N.T.S.	DRAWN -	REVISED	
PLOT DATE = 11/26/2013	CHECKED -	REVISED	

STATE OF ILLINOIS
DEPARTMENT OF TRANSPORTATION

EXISTING AS-BUILTS SN 016-1088

SHEET NO. AS-44 OF AS-72 SHEETS

F.A.I. RTE.	SECTION	COUNTY	TOTAL SHEETS	SHEET NO.
90/94/290	2013-036R	COOK	256	186

CONTRACT NO. 60W71

ILLINOIS FED. AID PROJECT -NUMBER-

FOR INFORMATION ONLY

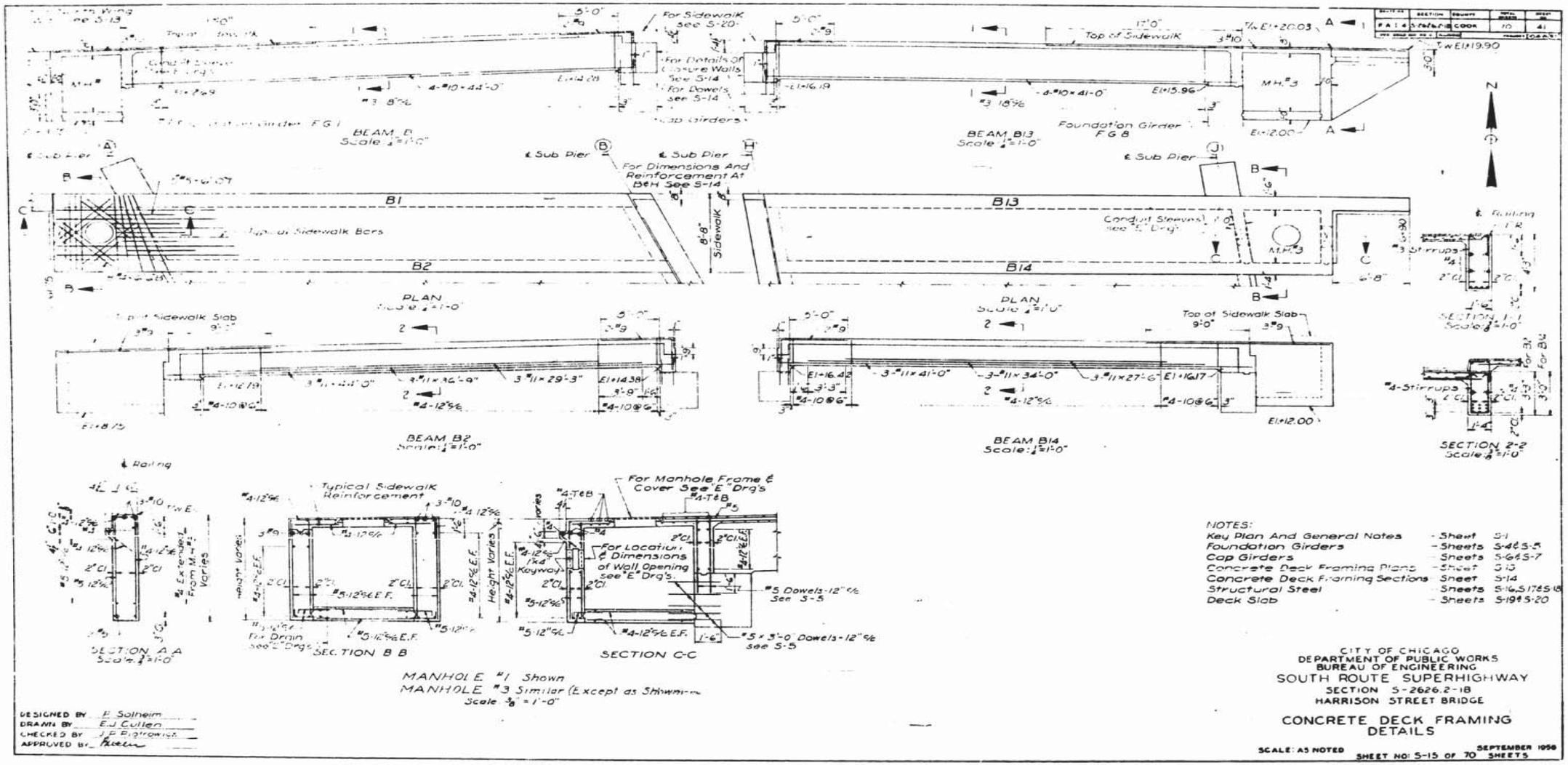

USER NAME = dunkerleyb	DESIGNED -	REVISED	STATE OF ILLINOIS DEPARTMENT OF TRANSPORTATION	EXISTING AS-BUILTS SN 016-1088	F.A.I. RTE.	SECTION	COUNTY	TOTAL SHEETS	SHEET NO.
	CHECKED -	REVISED			90/94/290	2013-036R	COOK	256	187
PLOT SCALE = N.T.S.	DRAWN -	REVISED					CONTRACT NO. 60W71		
PLOT DATE = 11/26/2013	CHECKED -	REVISED		SHEET NO. AS-45 OF AS-72 SHEETS		ILLINOIS	FED. AID PROJECT -NUMBER-		

D160W71-sht-AS-BUILT-45.dgn

FOR INFORMATION ONLY

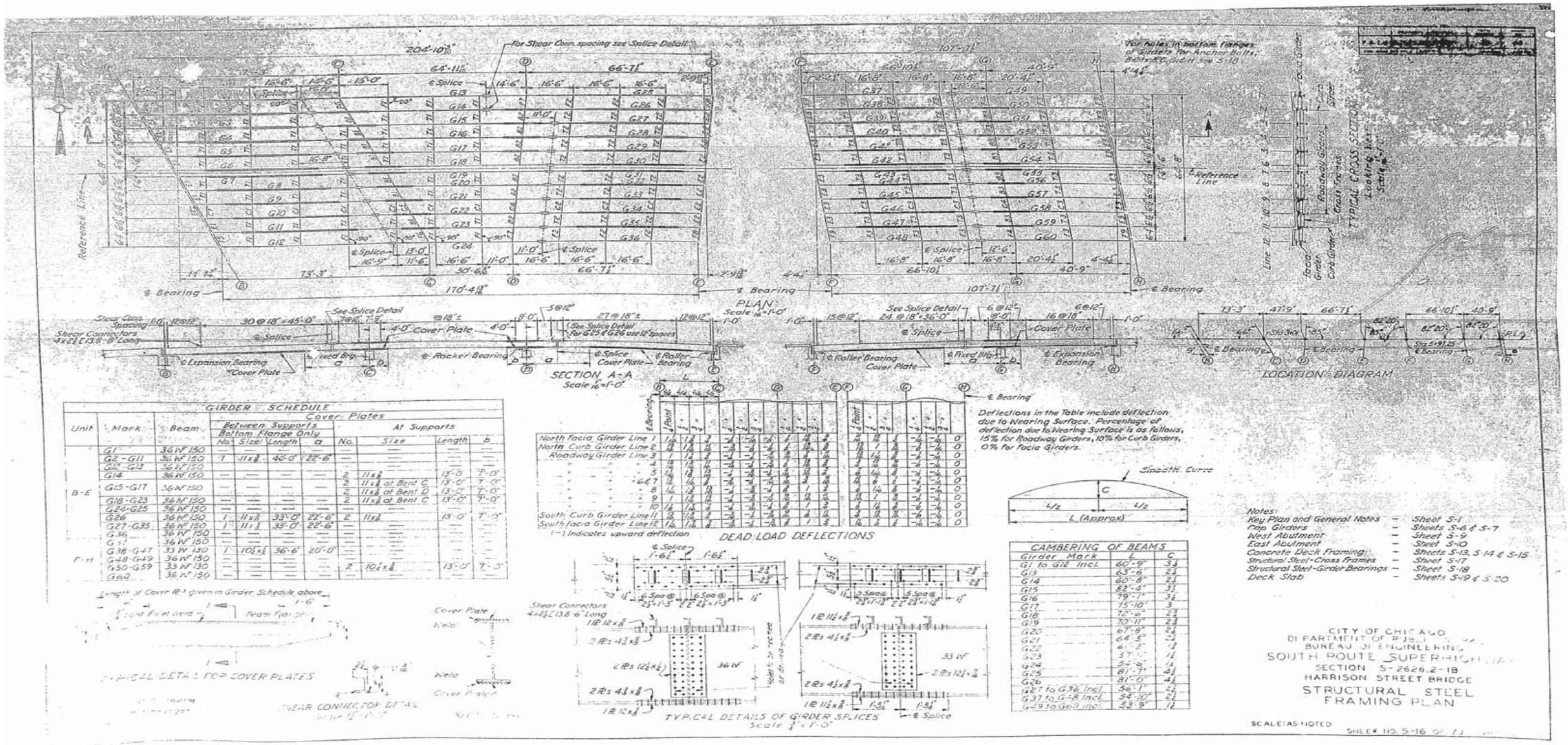

GIRDER SCHEDULE

Unit	Mark	Beam	Cover Plates: Between Supports, Bottom Flange Only: No.	Size	Length	a	At Supports: No.	Size	Length	b
	G1	36 WF 150	—				—			
	G2-G11	36 WF 150	1	11x⅝	40'-0"	22'-6"	—			
	G12-G13	36 WF 150								
	G14	36 WF 150	—	—	—	—	2	11x⅝	13'-0"	7'-0"
B-E	G15-G17	36 WF 150	—	—	—	—	2	11x⅝ at Bent C	13'-0"	7'-0"
							2	11x⅝ at Bent D	13'-0"	7'-0"
	G18-G23	36 WF 150	—	—	—	—	2	11x⅝ at Bent C	13'-0"	7'-0"
	G24-G25	36 WF 150	—							
	G26	36 WF 150	1	11x⅝	33'-0"	22'-6"	2	11x⅝	13'-0"	7'-0"
	G27-G35	36 WF 150	1	11x⅝	33'-0"	22'-6"	—			
	G36	36 WF 150	—	—	—	—	—			
	G37	36 WF 150	—				—			
F-H	G38-G47	33 WF 130	1	10½x⅝	36'-6"	20'-0"	—			
	G48-G49	36 WF 150	—	—	—	—	—			
	G50-G59	33 WF 130	—	—	—	—	2	10½x⅝	13'-0"	7'-0"
	G60	36 WF 150	—	—	—	—	—			

Length of Cover Pl's given in Girder Schedule above

CAMBERING OF BEAMS

Girder Mark	L	C
G1 to G12 Incl.	60'-9"	3¼
G13	63'-6"	2¼
G14	60'-8"	2¼
G15	82'-4"	3¼
G16	79'-1"	3¼
G17	75'-10"	3
G18	72'-6"	2¾
G19	70'-11"	2¾
G20	67'-8"	2¼
G21	64'-5"	2¼
G22	61'-2"	1¾
G23	57'-1"	1¼
G24	54'-4"	1¼
G25	81'-7"	4¼
G26	81'-0"	4¼
G27 to G36 Incl.	56'-1"	2¼
G37 to G48 Incl.	54'-10"	2¼
G49 to G60 Incl.	53'-9"	1¼

USER NAME = dunkerleyb	DESIGNED -	REVISED	
	CHECKED -	REVISED	
PLOT SCALE = N.T.S.	DRAWN -	REVISED	
PLOT DATE = 11/26/2013	CHECKED -	REVISED	

STATE OF ILLINOIS
DEPARTMENT OF TRANSPORTATION

EXISTING AS-BUILTS SN 016-1088

SHEET NO. AS-46 OF AS-72 SHEETS

F.A.I. RTE.	SECTION	COUNTY	TOTAL SHEETS	SHEET NO.
90/94/290	2013-036R	COOK	256	188

CONTRACT NO. 60W71

ILLINOIS FED. AID PROJECT -NUMBER-

D160W71-sht-AS-BUILT-46.dgn

FOR INFORMATION ONLY

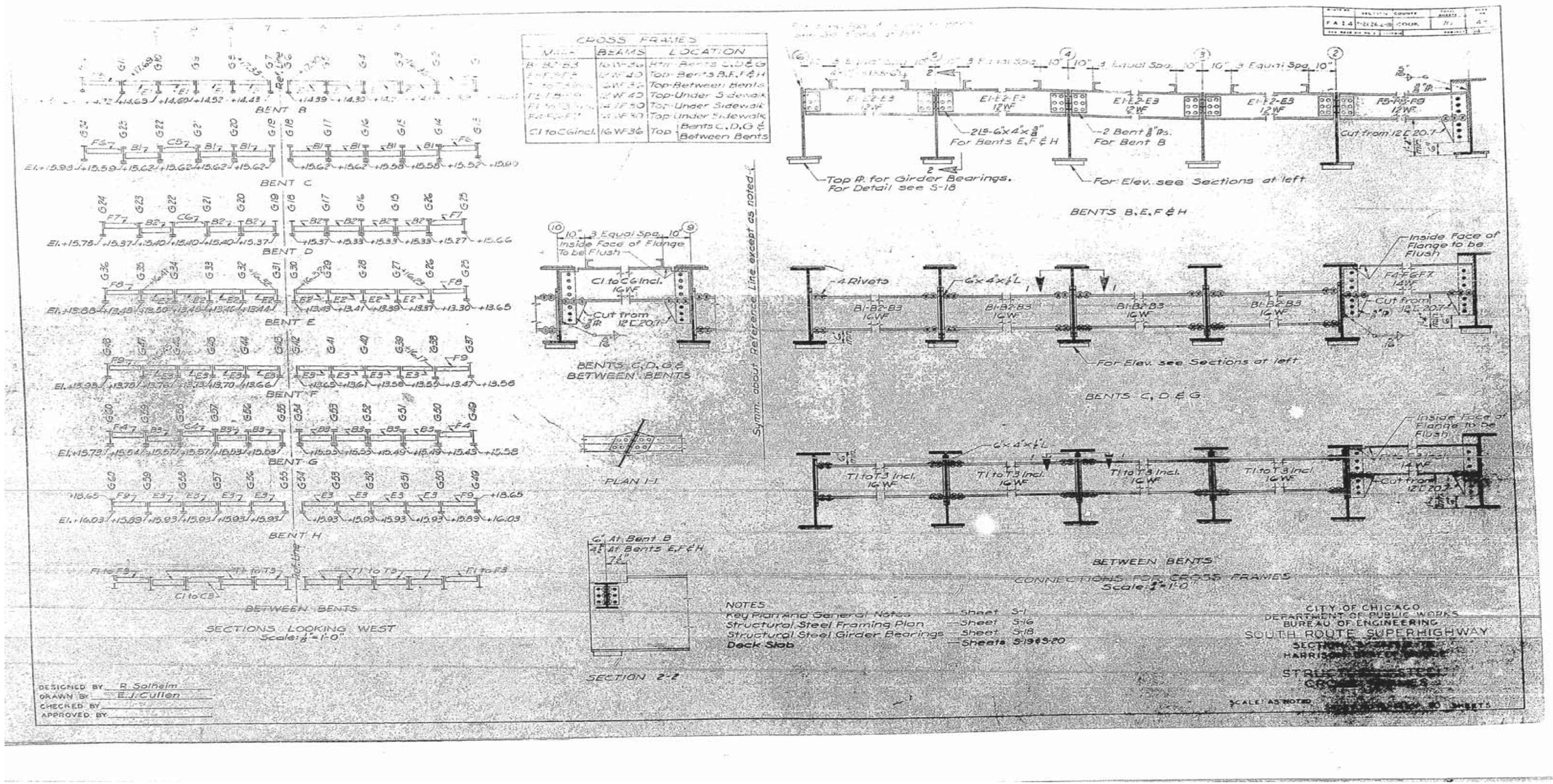

USER NAME = dunkerleyb	DESIGNED -	REVISED	
	CHECKED -	REVISED	
PLOT SCALE = N.T.S.	DRAWN -	REVISED	
PLOT DATE = 11/26/2013	CHECKED -	REVISED	

STATE OF ILLINOIS
DEPARTMENT OF TRANSPORTATION

EXISTING AS-BUILTS SN 016-1088

SHEET NO. AS-47 OF AS-72 SHEETS

F.A.I. RTE.	SECTION	COUNTY	TOTAL SHEETS	SHEET NO.
90/94/290	2013-036R	COOK	256	189
		CONTRACT NO. 60W71		
		ILLINOIS FED. AID PROJECT -NUMBER-		

D160W71-sht-AS-BUILT-47.dgn

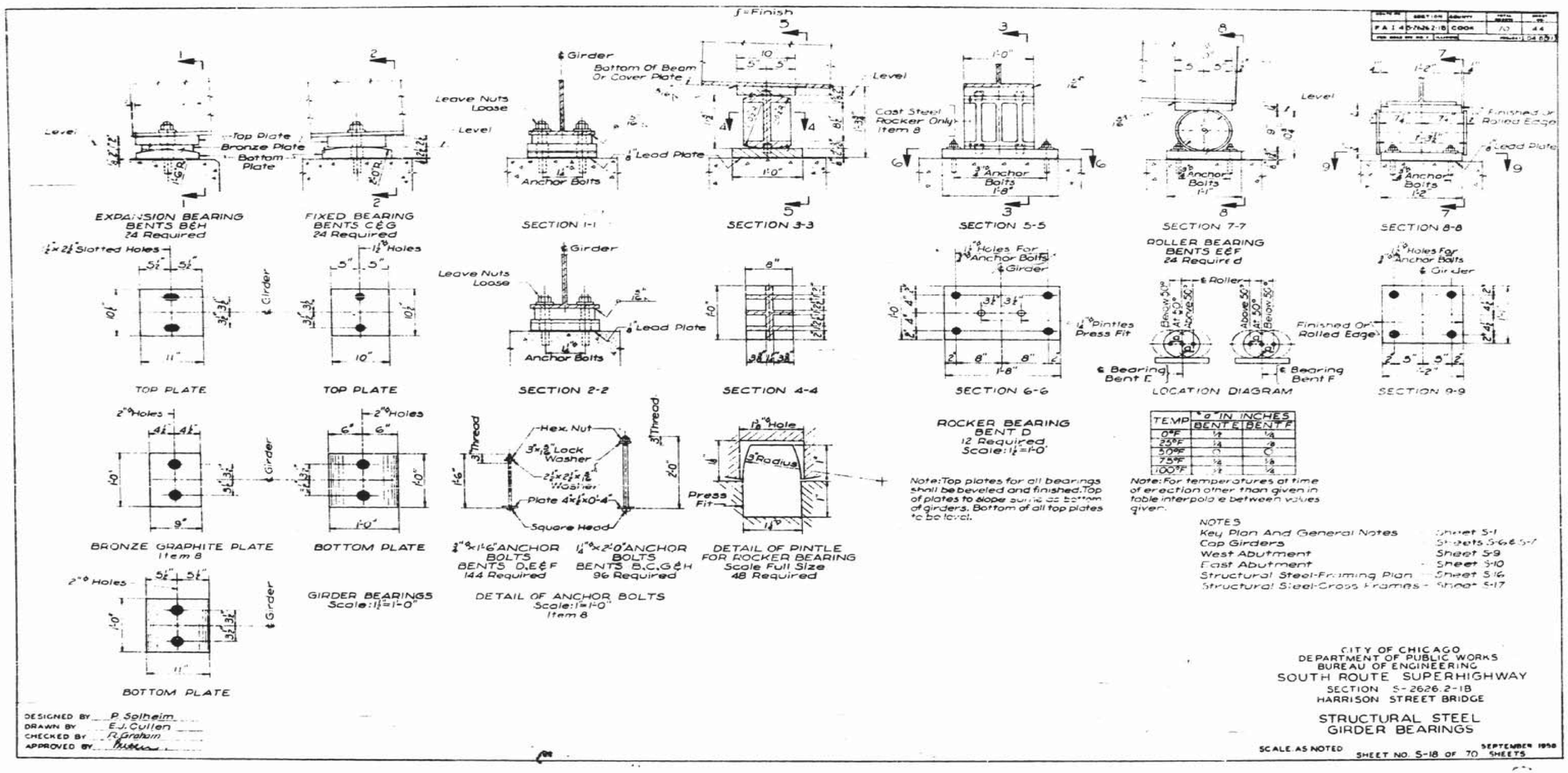

TEMP	"a" IN INCHES BENT E	BENT F
0°F	½	½
25°F	¼	0
50°F	0	0
75°F	¼	⅛
100°F	½	¼

USER NAME = dunkerleyb	DESIGNED -	REVISED
	CHECKED -	REVISED
PLOT SCALE = N.T.S.	DRAWN -	REVISED
PLOT DATE = 11/26/2013	CHECKED -	REVISED

STATE OF ILLINOIS
DEPARTMENT OF TRANSPORTATION

EXISTING AS-BUILTS SN 016-1088

SHEET NO. AS-48 OF AS-72 SHEETS

F.A.I. RTE.	SECTION	COUNTY	TOTAL SHEETS	SHEET NO.
90/94/290	2013-036R	COOK	256	190

CONTRACT NO. 60W71

ILLINOIS FED. AID PROJECT -NUMBER-

D160W71-sht-AS-BUILT-48.dgn

FOR INFORMATION ONLY

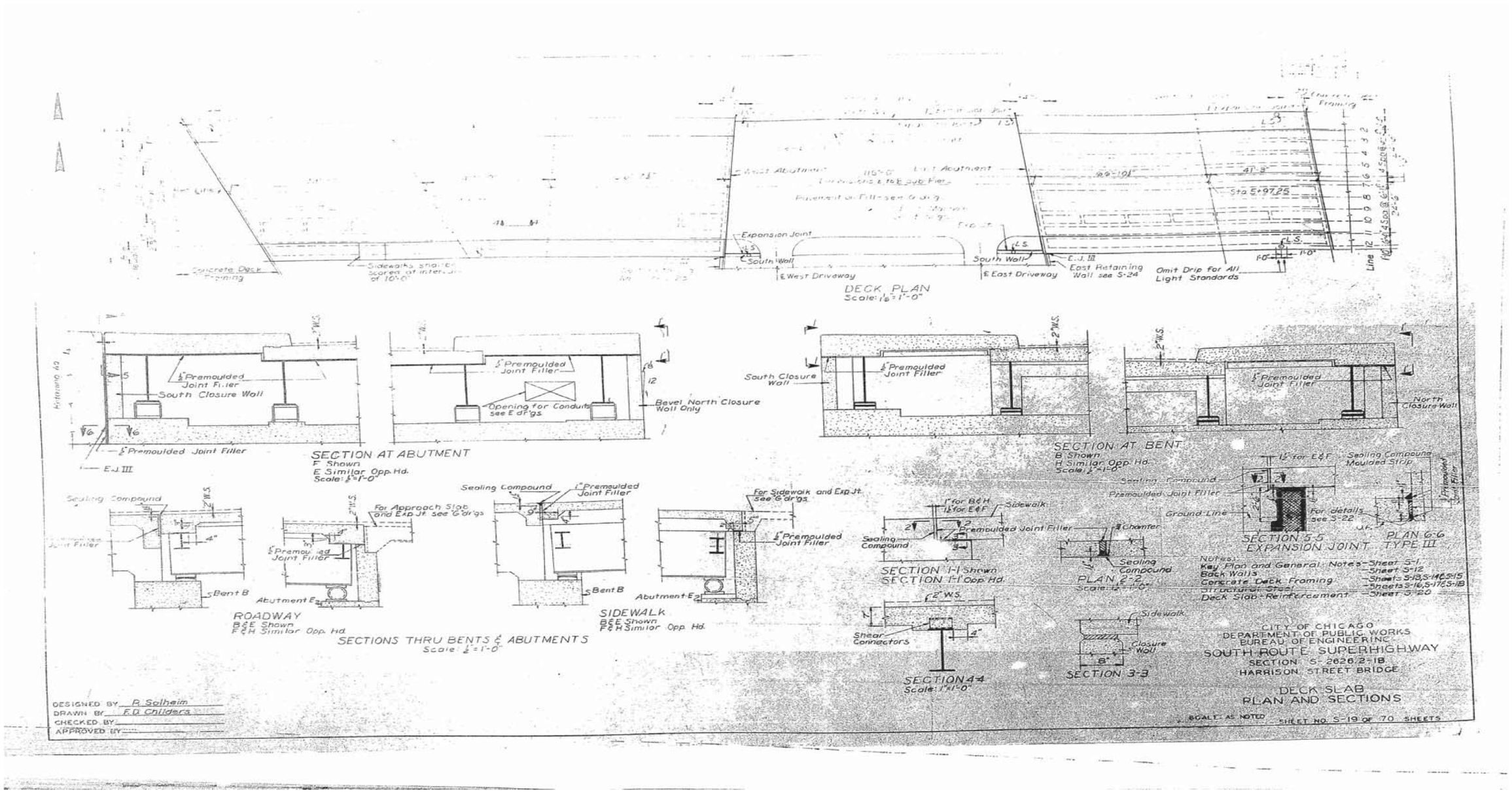

D160W71-sht-AS-BUILT-49.dgn

USER NAME = dunkerleyb	DESIGNED -	REVISED	
	CHECKED -	REVISED	
PLOT SCALE = N.T.S.	DRAWN -	REVISED	
PLOT DATE = 11/26/2013	CHECKED -	REVISED	

STATE OF ILLINOIS
DEPARTMENT OF TRANSPORTATION

EXISTING AS-BUILTS SN 016-1088

SHEET NO. AS-49 OF AS-72 SHEETS

F.A.I. RTE.	SECTION	COUNTY	TOTAL SHEETS	SHEET NO.
90/94/290	2013-036R	COOK	256	191
		CONTRACT NO. 60W71		
		ILLINOIS FED. AID PROJECT -NUMBER-		

FOR INFORMATION ONLY

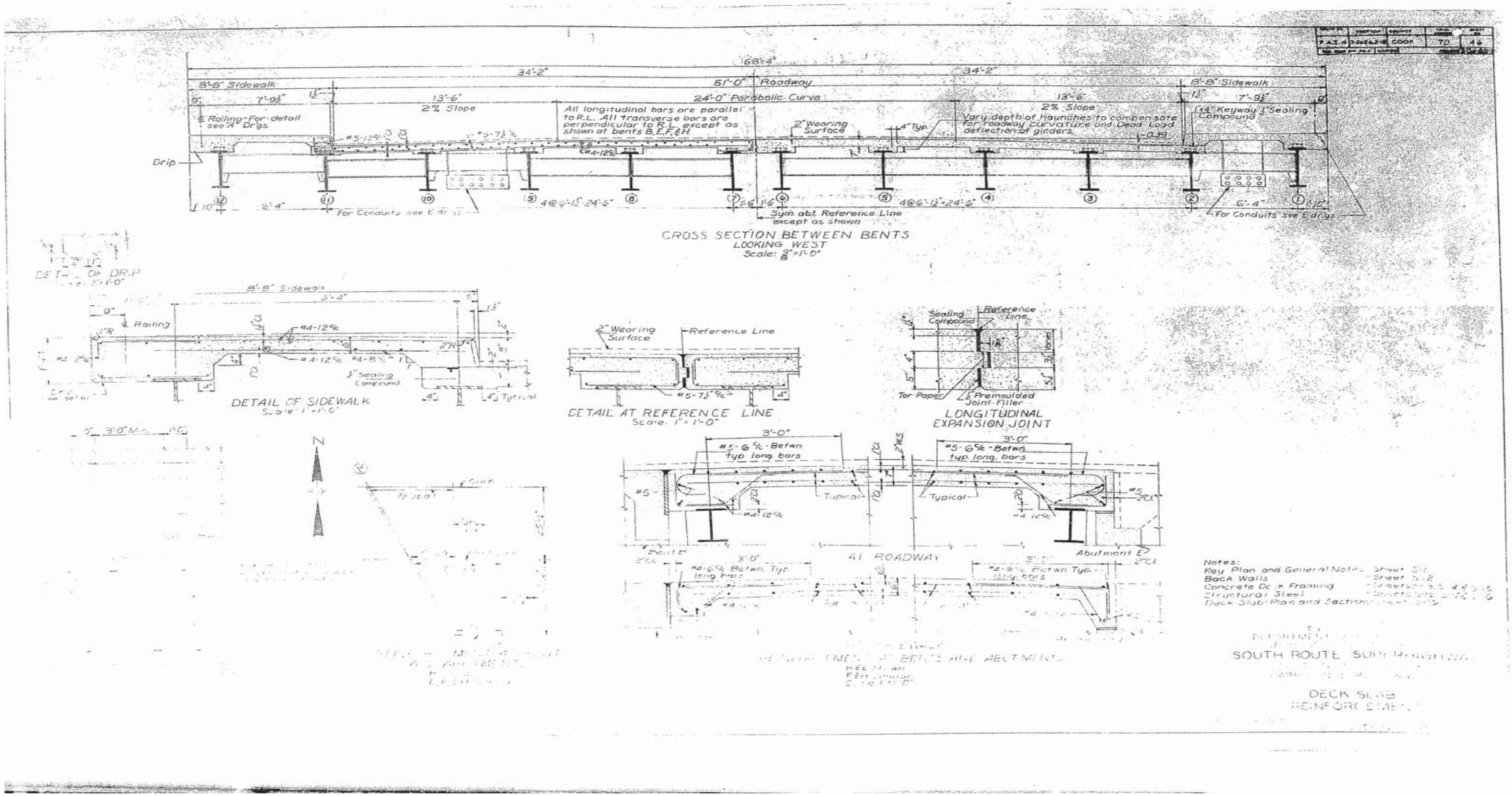

USER NAME = dunkerleyb	DESIGNED -	REVISED
	CHECKED -	REVISED
PLOT SCALE = N.T.S.	DRAWN -	REVISED
PLOT DATE = 11/26/2013	CHECKED -	REVISED

STATE OF ILLINOIS
DEPARTMENT OF TRANSPORTATION

EXISTING AS-BUILTS SN 016-1088

SHEET NO. AS-50 OF AS-72 SHEETS

F.A.I. RTE.	SECTION	COUNTY	TOTAL SHEETS	SHEET NO.
90/94/290	2013-036R	COOK	256	192

CONTRACT NO. 60W71

ILLINOIS FED. AID PROJECT -NUMBER-

D160W71-sht-AS-BUILT-50.dgn

FOR INFORMATION ONLY

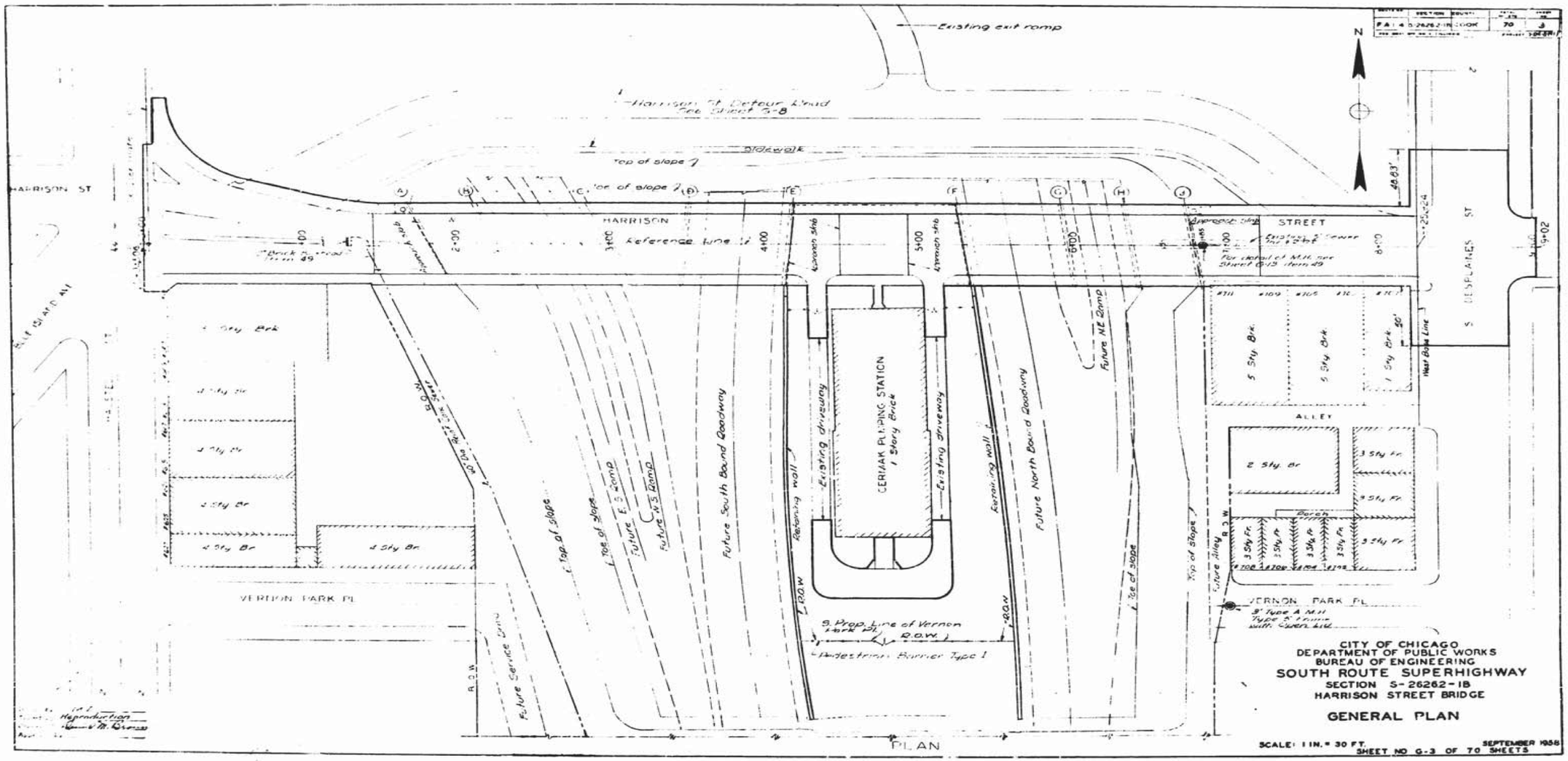

D160W71-sht-AS-BUILT-51.dgn

USER NAME = dunkerleyb	DESIGNED -	REVISED	
	CHECKED -	REVISED	
PLOT SCALE = N.T.S.	DRAWN -	REVISED	
PLOT DATE = 11/26/2013	CHECKED -	REVISED	

STATE OF ILLINOIS
DEPARTMENT OF TRANSPORTATION

EXISTING AS-BUILTS SN 016-1088

SHEET NO. AS-51 OF AS-72 SHEETS

F.A.I. RTE.	SECTION	COUNTY	TOTAL SHEETS	SHEET NO.
90/94/290	2013-036R	COOK	256	193

CONTRACT NO. 60W71

ILLINOIS FED. AID PROJECT -NUMBER-

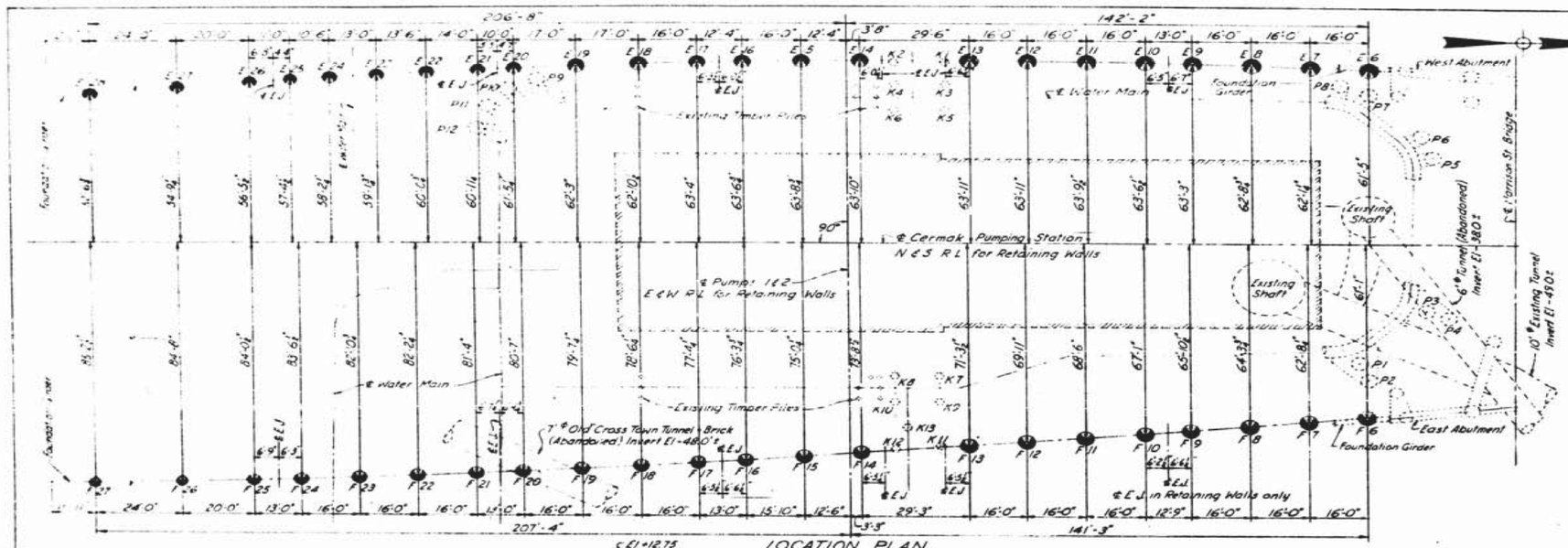

LOCATION PLAN
Scale 1/16"=1'-0"

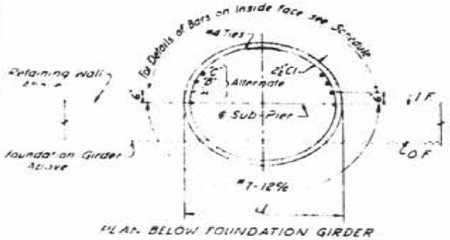

PLAN BELOW FOUNDATION GIRDER

Note
Contractor shall make proper arrangements to maintain 2½" clearance for vertical reinforcing for entire depth of Sub-Pier.

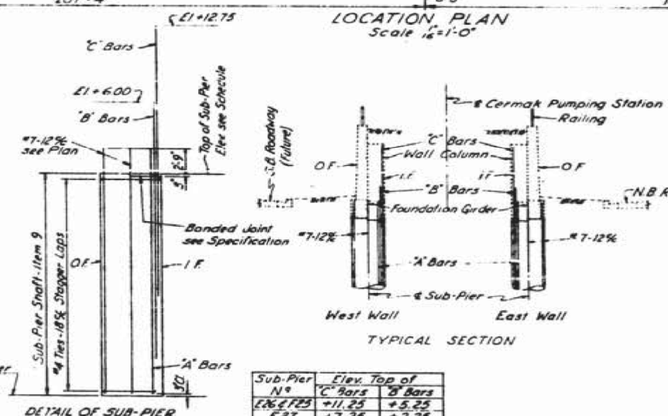

TYPICAL SECTION

DETAIL OF SUB-PIER
E6 to E25 incl.
F6 to F24 incl.
E26, E27, E28 } Similar except as
F25, F26, F27 } shown in Table

Sub-Pier Nº	Elev. Top of "C" Bars	Elev. Top of "B" Bars
E26 & F25	+11.25	+5.25
E27	+7.25	+2.25
F26	+7.25	+2.75
E28	—	+2.50
F27	—	+2.75

SUB-PIER SCHEDULE

	Mark	d	Elev. Top	Reinforcement (℄) "A" Bars	"B" Bars	"C" Bars
West Wall	E6	5'-0	-3.50	6-#11x41'-0	6-#11x44'-0	5-#11x44'-0
	E7	5'-0	-3.25	6-#11x41'-3	6-#11x44'-0	5-#11x44'-0
	E8	5'-0	-3.25	6-#11x41'-3	6-#11x44'-0	5-#11x44'-0
	E9	4'-9	-3.00	6-#11x41'-6	5-#11x42'-0	5-#11x42'-0
	E10	4'-9	-2.75	6-#11x41'-9	5-#11x42'-0	5-#11x42'-0
	E11	4'-9	-2.50	6-#11x42'-0	5-#11x42'-0	5-#11x42'-0
	E12	4'-9	-2.50	6-#11x42'-0	5-#11x42'-0	5-#11x42'-0
	E13	4'-9	-2.25	6-#11x42'-3	5-#11x41'-0	5-#11x41'-0
	E14	4'-6	-2.00	5-#11x42'-6	5-#11x40'-0	5-#11x40'-0
	E15	4'-6	-2.00	5-#11x42'-6	5-#11x40'-0	5-#11x40'-0
	E16	4'-3	-1.75	5-#11x42'-9	5-#11x40'-0	4-#11x40'-0
	E17	4'-3	-1.75	5-#11x42'-9	5-#11x40'-0	4-#11x40'-0
	E18	4'-2	-1.50	5-#11x43'-0	5-#11x40'-0	5-#11x40'-0
	E19	4'-6	-1.50	5-#11x43'-0	5-#11x40'-0	5-#11x40'-0
	E20	4'-0	-1.25	5-#11x43'-3	4-#11x39'-0	4-#11x39'-0
	E21	3'-9	-1.25	4-#11x43'-3	4-#11x38'-0	4-#11x38'-0
	E22	4'-0	-1.00	5-#11x43'-6	4-#11x38'-0	4-#11x38'-0
	E23	3'-9	-1.00	4-#11x43'-6	4-#11x39'-0	4-#11x39'-0
	E24	3'-9	-0.75	4-#11x43'-9	4-#11x37'-0	4-#11x37'-0
	E25	3'-6	-0.75	4-#11x43'-9	4-#11x36'-0	3-#11x36'-0
	E26	3'-6	-0.75	4-#11x43'-9	4-#11x36'-0	3-#11x36'-0
	E27	3'-6	-0.50	4-#11x44'-0	4-#11x30'-0	3-#11x30'-0
	E28	3'-0	-0.25	4-#9x44'-3	5-#9x25'-0	----
East Wall	F6	4'-9	-2.50	6-#11x42'-0	5-#11x42'-0	5-#11x42'-0
	F7	4'-9	-2.50	6-#11x42'-0	5-#11x42'-0	5-#11x42'-0
	F8	4'-9	-2.25	6-#11x42'-3	5-#11x42'-0	5-#11x42'-0
	F9	4'-6	-2.00	5-#11x42'-6	5-#11x41'-0	5-#11x41'-0
	F10	4'-6	-2.00	5-#11x42'-6	5-#11x41'-0	5-#11x41'-0
	F11	4'-6	-1.75	5-#11x42'-9	5-#11x41'-0	5-#11x41'-0
	F12	4'-6	-1.50	5-#11x43'-0	5-#11x41'-0	5-#11x41'-0
	F13	4'-6	-1.50	5-#11x43'-0	5-#11x40'-0	5-#11x40'-0
	F14	4'-3	-1.25	5-#11x43'-3	5-#11x40'-0	4-#11x40'-0
	F15	4'-3	-1.25	5-#11x43'-3	5-#11x40'-0	4-#11x40'-0
	F16	4'-0	-1.00	5-#11x43'-6	4-#11x40'-0	4-#11x40'-0
	F17	4'-0	-1.00	5-#11x43'-6	4-#11x40'-0	4-#11x40'-0
	F18	4'-0	-0.75	5-#11x43'-9	4-#11x40'-0	4-#11x40'-0
	F19	4'-0	-0.75	5-#11x43'-9	4-#11x40'-0	4-#11x40'-0
	F20	4'-0	-0.50	5-#11x44'-0	4-#11x39'-0	4-#11x39'-0
	F21	4'-0	-0.50	5-#11x44'-0	4-#11x39'-0	4-#11x39'-0
	F22	4'-0	-0.25	5-#11x44'-3	4-#11x39'-0	4-#11x39'-0
	F23	4'-0	0.00	5-#11x44'-6	4-#11x38'-0	4-#11x38'-0
	F24	3'-9	0.00	4-#11x44'-6	4-#11x38'-0	4-#11x38'-0
	F25	3'-6	0.00	4-#11x44'-6	4-#11x36'-0	3-#11x36'-0
	F26	3'-6	0.00	4-#11x44'-6	4-#11x30'-0	3-#11x30'-0
	F27	3'-0	0.00	4-#9x44'-6	5-#9x25'-0	----

Notes

CITY OF CHICAGO
DEPARTMENT OF PUBLIC WORKS
BUREAU OF ENGINEERING
SOUTH ROUTE SUPERHIGHWAY
SECTION S-2626.2-1B
HARRISON STREET BRIDGE

RETAINING WALLS
SUB-PIERS

SCALE: AS NOTED — SEPTEMBER 1958
SHEET NO. S-21 OF 70 SHEETS

DESIGNED BY P. Solheim
DRAWN BY H. H. Krueger
CHECKED BY R. Graham
APPROVED BY

USER NAME = dunkerleyb	DESIGNED -	REVISED	
	CHECKED -	REVISED	
PLOT SCALE = N.T.S.	DRAWN -	REVISED	
PLOT DATE = 11/26/2013	CHECKED -	REVISED	

STATE OF ILLINOIS
DEPARTMENT OF TRANSPORTATION

EXISTING AS-BUILTS SN 016-1088

SHEET NO. AS-52 OF AS-72 SHEETS

F.A.I. RTE.	SECTION	COUNTY	TOTAL SHEETS	SHEET NO.
90/94/290	2013-036R	COOK	256	194

CONTRACT NO. 60W71

ILLINOIS FED. AID PROJECT -NUMBER-

D160W71-sht-AS-BUILT-52.dgn

FOR INFORMATION ONLY

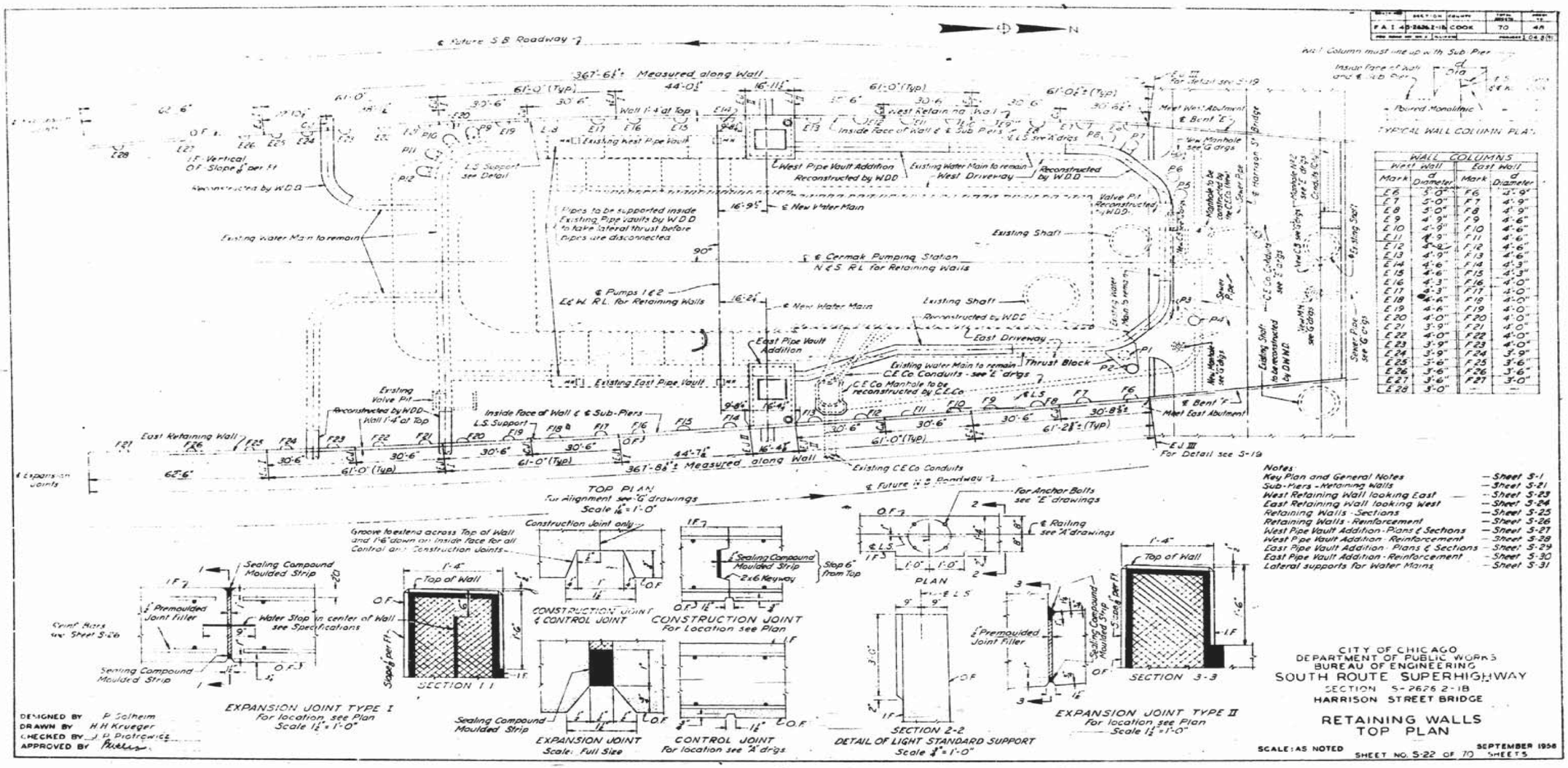

D160W71-sht-AS-BUILT-53.dgn

USER NAME = dunkerleyb	DESIGNED -	REVISED	
	CHECKED -	REVISED	
PLOT SCALE = N.T.S.	DRAWN -	REVISED	
PLOT DATE = 11/26/2013	CHECKED -	REVISED	

STATE OF ILLINOIS
DEPARTMENT OF TRANSPORTATION

EXISTING AS-BUILTS SN 016-1088

SHEET NO. AS-53 OF AS-72 SHEETS

F.A.I. RTE.	SECTION	COUNTY	TOTAL SHEETS	SHEET NO.
90/94/290	2013-036R	COOK	256	195
		CONTRACT NO. 60W71		
	ILLINOIS	FED. AID PROJECT -NUMBER-		

FOR INFORMATION ONLY

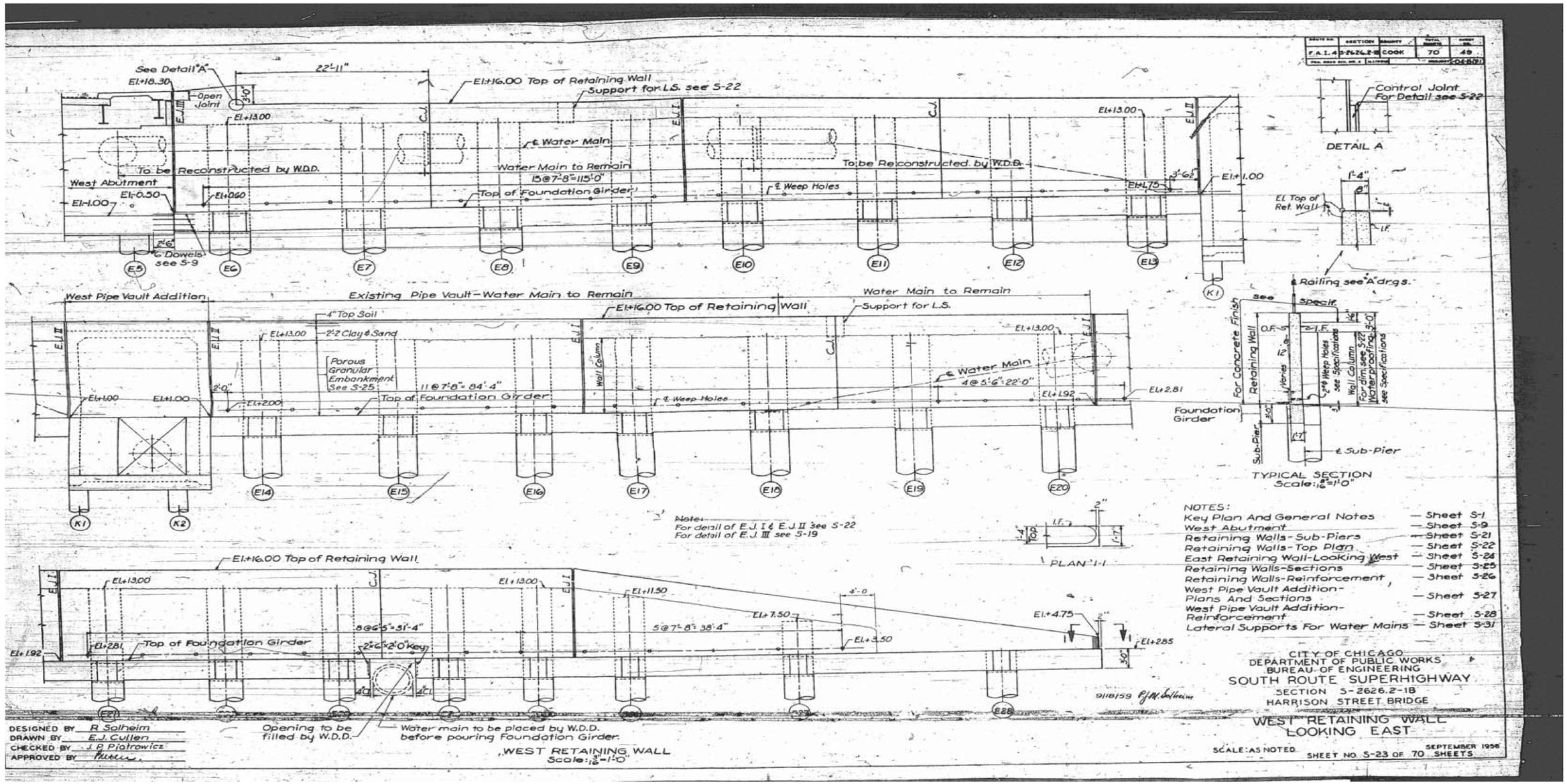

USER NAME = dunkerleyb	DESIGNED -	REVISED
	CHECKED -	REVISED
PLOT SCALE = N.T.S.	DRAWN -	REVISED
PLOT DATE = 11/26/2013	CHECKED -	REVISED

STATE OF ILLINOIS
DEPARTMENT OF TRANSPORTATION

EXISTING AS-BUILTS SN 016-1088

SHEET NO. AS-54 OF AS-72 SHEETS

F.A.I. RTE.	SECTION	COUNTY	TOTAL SHEETS	SHEET NO.
90/94/290	2013-036R	COOK	256	196

CONTRACT NO. 60W71

ILLINOIS FED. AID PROJECT -NUMBER-

D160W71-sht-AS-BUILT-54.dgn

FOR INFORMATION ONLY

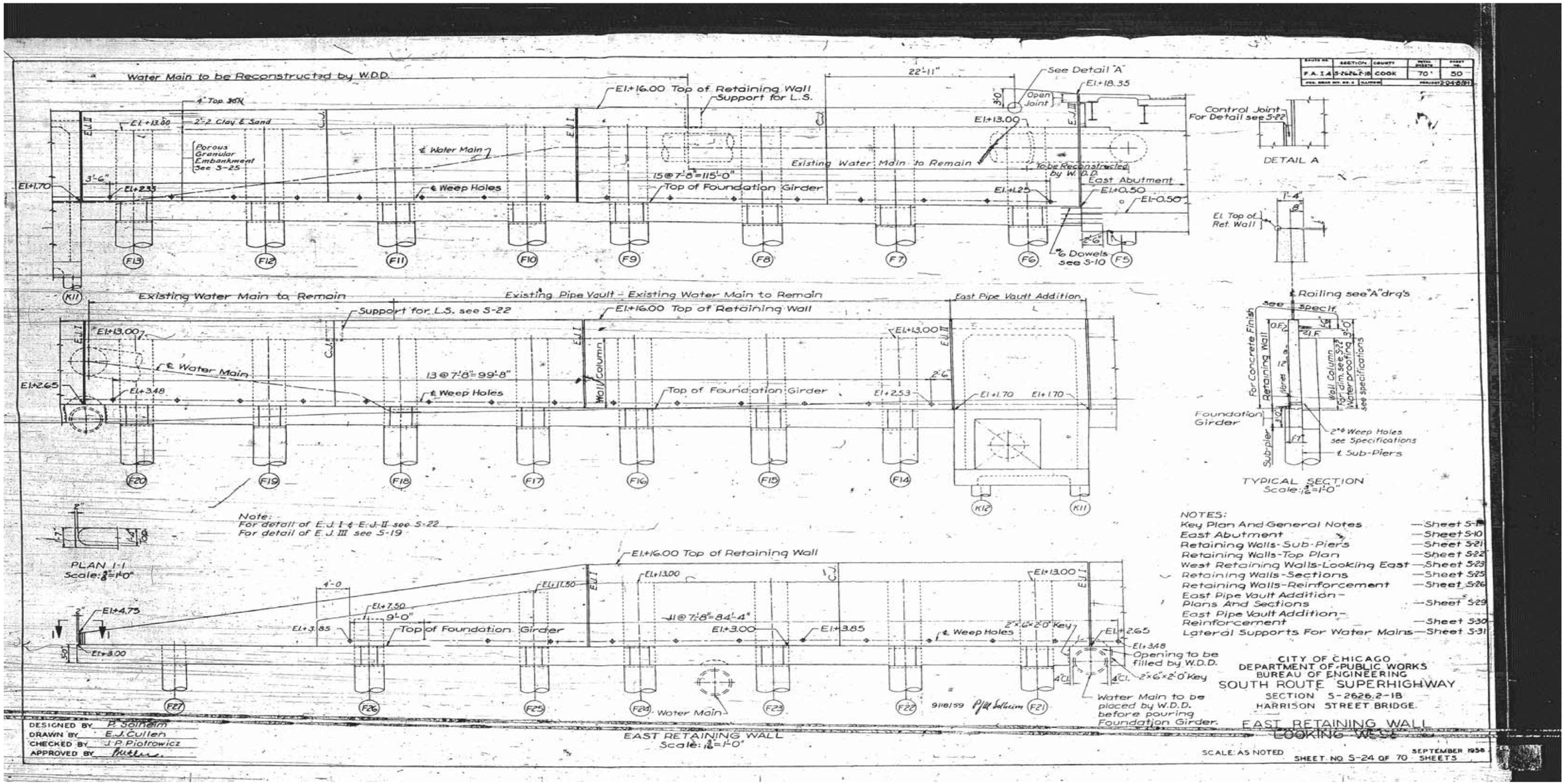

USER NAME = dunkerleyb	DESIGNED -	REVISED	
	CHECKED -	REVISED	
PLOT SCALE = N.T.S.	DRAWN -	REVISED	
PLOT DATE = 11/26/2013	CHECKED -	REVISED	

STATE OF ILLINOIS
DEPARTMENT OF TRANSPORTATION

EXISTING AS-BUILTS SN 016-1088

SHEET NO. AS-55 OF AS-72 SHEETS

F.A.I. RTE.	SECTION	COUNTY	TOTAL SHEETS	SHEET NO.
90/94/290	2013-036R	COOK	256	197

CONTRACT NO. 60W71

ILLINOIS FED. AID PROJECT -NUMBER-

D160W71-sht-AS-BUILT-55.dgn

FOR INFORMATION ONLY

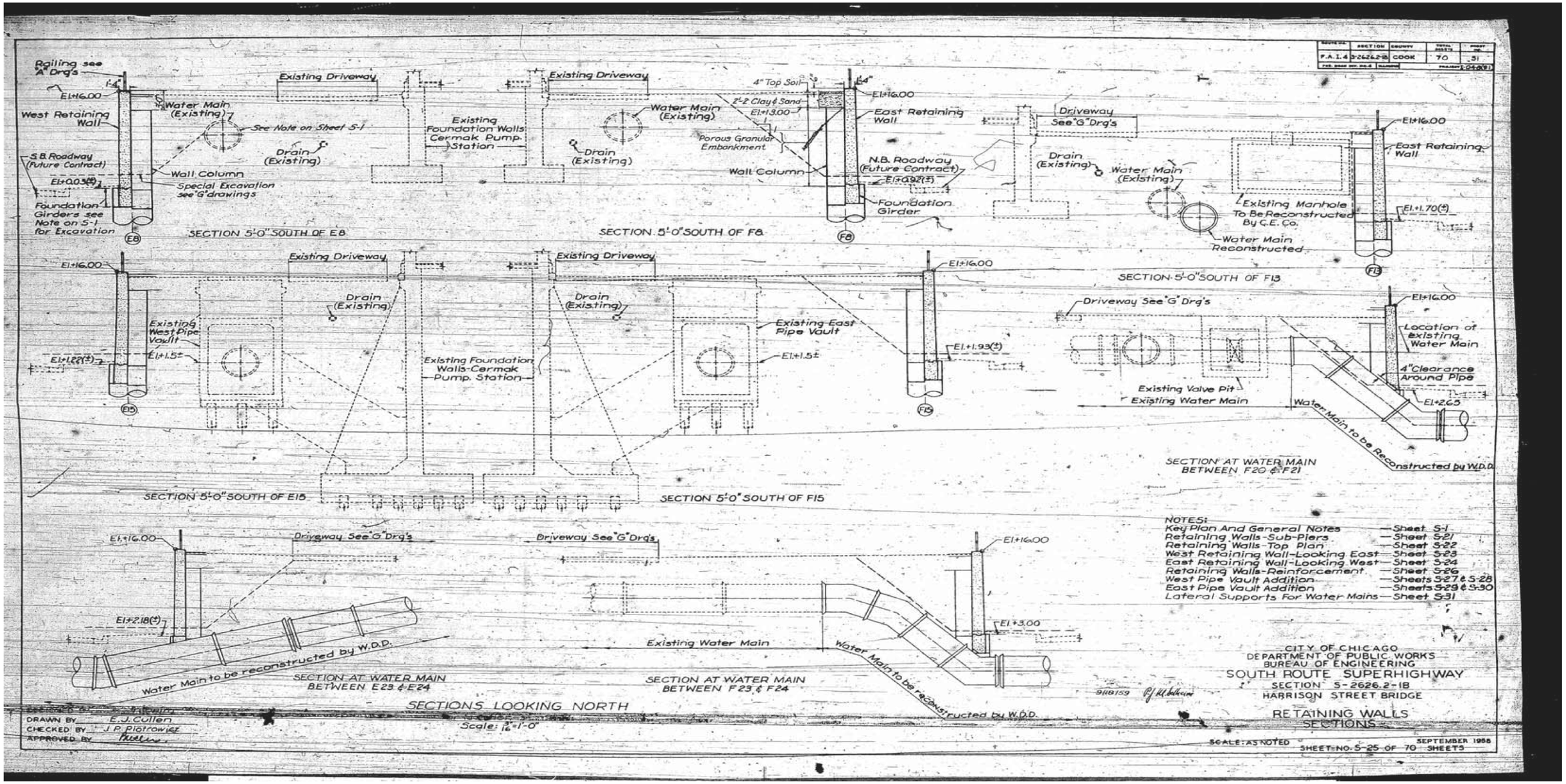

D160W71-sht-AS-BUILT-56.dgn

USER NAME = dunkerleyb	DESIGNED -	REVISED	
	CHECKED -	REVISED	
PLOT SCALE = N.T.S.	DRAWN -	REVISED	
PLOT DATE = 11/26/2013	CHECKED -	REVISED	

STATE OF ILLINOIS
DEPARTMENT OF TRANSPORTATION

EXISTING AS-BUILTS SN 016-1088

SHEET NO. AS-56 OF AS-72 SHEETS

F.A.I. RTE.	SECTION	COUNTY	TOTAL SHEETS	SHEET NO.
90/94/290	2013-036R	COOK	256	198

CONTRACT NO. 60W71

ILLINOIS FED. AID PROJECT -NUMBER-

FOR INFORMATION ONLY

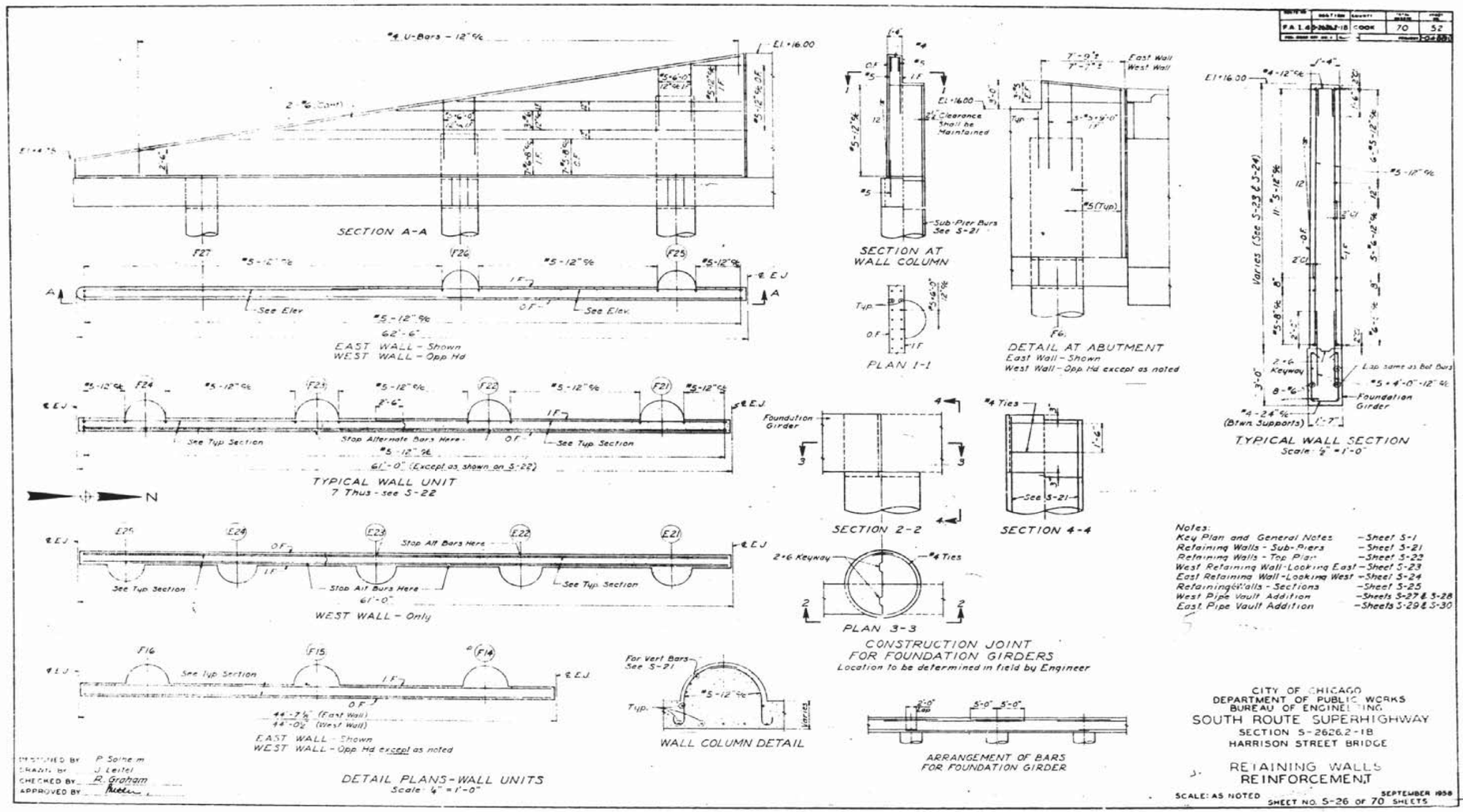

USER NAME = dunkerleyb	DESIGNED -	REVISED
	CHECKED -	REVISED
PLOT SCALE = N.T.S.	DRAWN -	REVISED
PLOT DATE = 11/26/2013	CHECKED -	REVISED

STATE OF ILLINOIS
DEPARTMENT OF TRANSPORTATION

EXISTING AS-BUILTS SN 016-1088

SHEET NO. AS-57 OF AS-72 SHEETS

F.A.I. RTE.	SECTION	COUNTY	TOTAL SHEETS	SHEET NO.
90/94/290	2013-036R	COOK	256	199
		CONTRACT NO. 60W71		
	ILLINOIS	FED. AID PROJECT -NUMBER-		

D160W71-sht-AS-BUILT-57.dgn

FOR INFORMATION ONLY

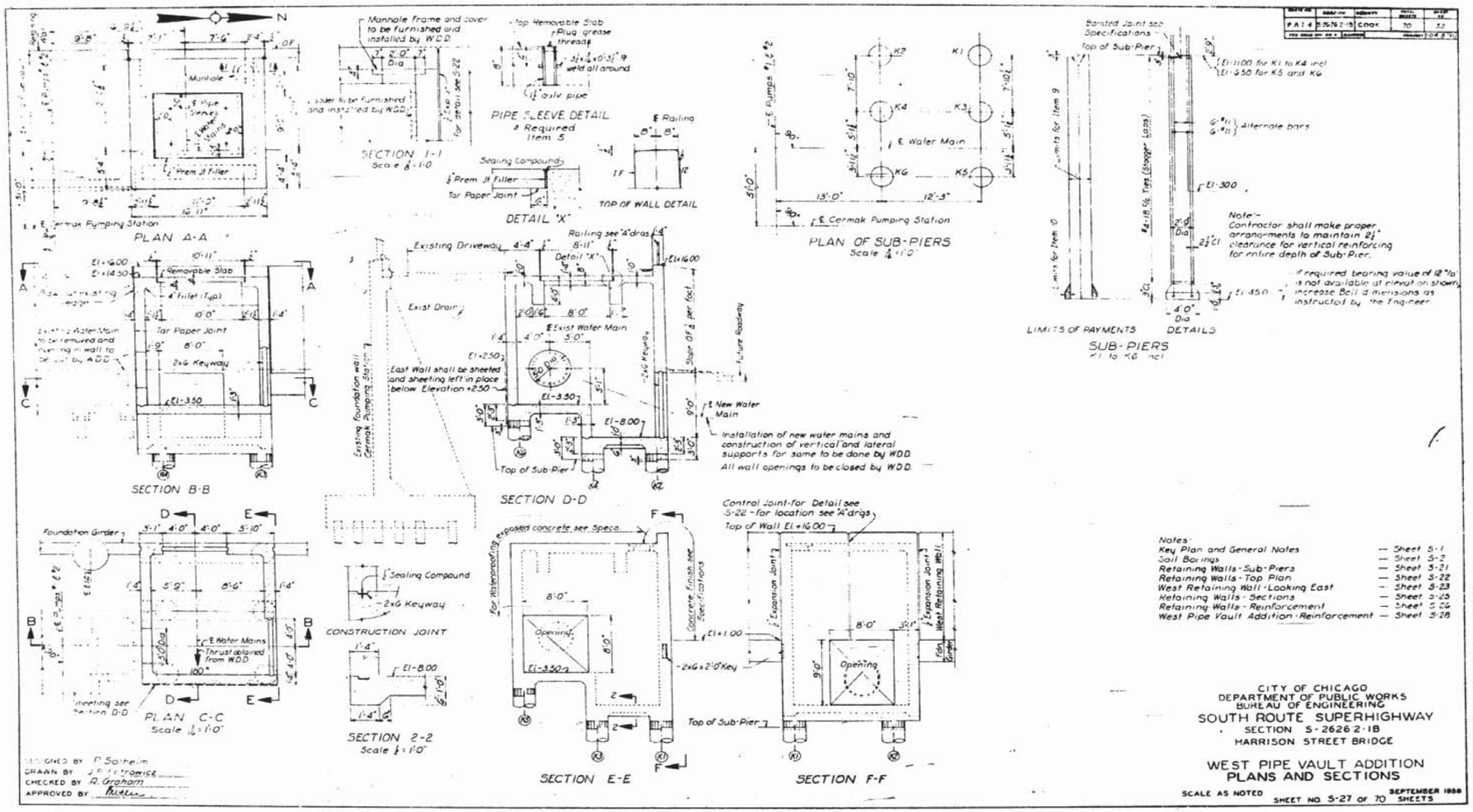

D160W71-sht-AS-BUILT-58.dgn

USER NAME = dunkerleyb	DESIGNED -	REVISED	
	CHECKED -	REVISED	
PLOT SCALE = N.T.S.	DRAWN -	REVISED	
PLOT DATE = 11/26/2013	CHECKED -	REVISED	

STATE OF ILLINOIS
DEPARTMENT OF TRANSPORTATION

EXISTING AS-BUILTS SN 016-1088

SHEET NO. AS-58 OF AS-72 SHEETS

F.A.I. RTE.	SECTION	COUNTY	TOTAL SHEETS	SHEET NO.
90/94/290	2013-036R	COOK	256	200

CONTRACT NO. 60W71

ILLINOIS FED. AID PROJECT -NUMBER-