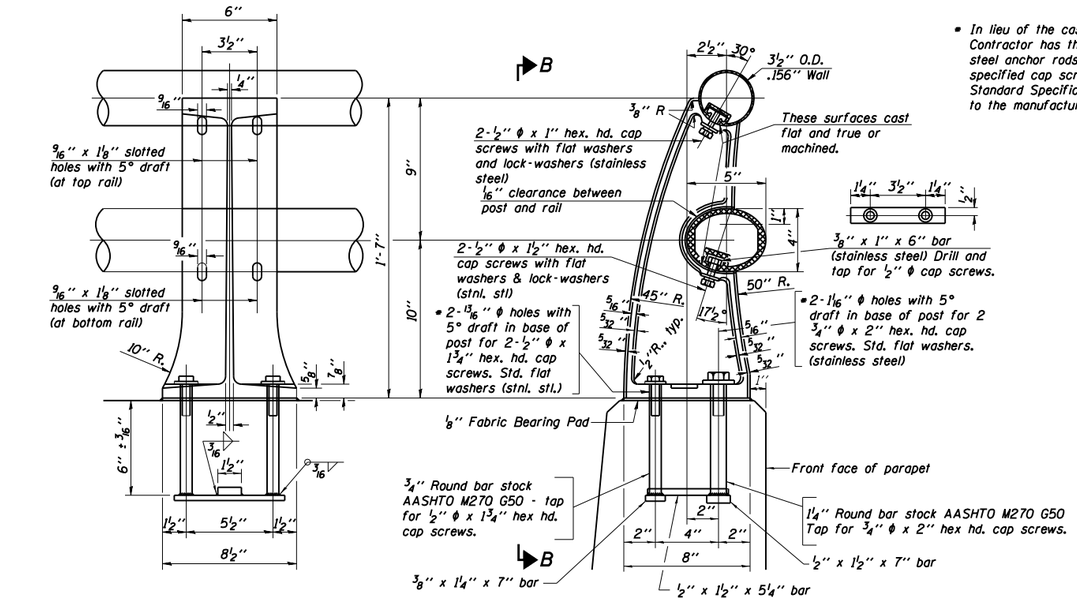

VIEW B-B

SECTION A-A

RAIL POST DETAILS

• In lieu of the cast-in-place anchor device shown, the Contractor has the option of drilling and setting stainless steel anchor rods of the same diameter and grade as the specified cap screws according to Article 509.06 of the Standard Specifications. Embedment shall be according to the manufacturer's specifications.

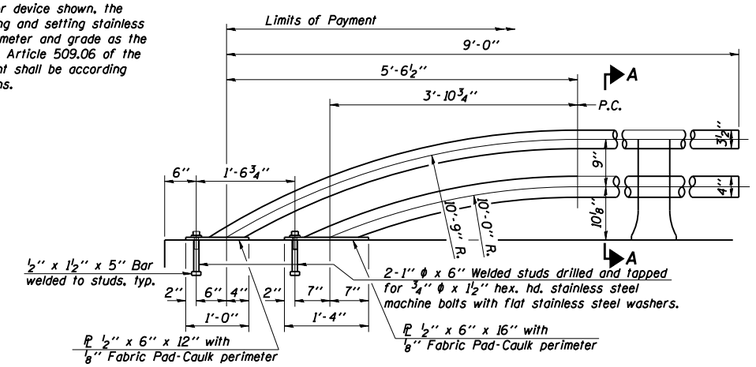

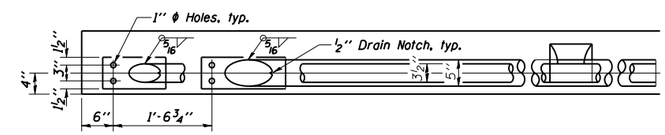

RAIL TERMINAL SECTION

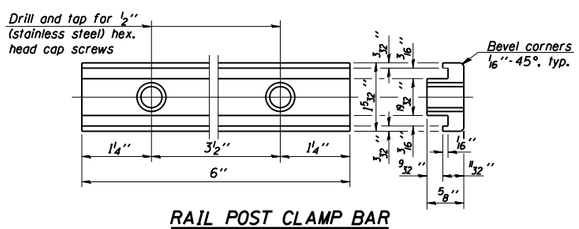

RAIL POST CLAMP BAR
For Top Rail

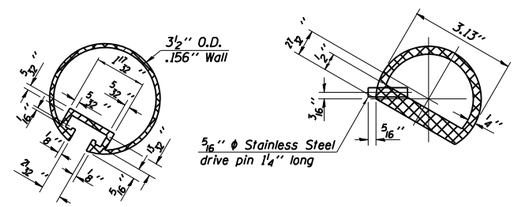

SECTION THRU TOP RAIL

SECTION THRU SPLICE
For Top Rail

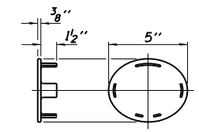

CAST END CAP
For bottom rail
DRIVE FIT TYPE

Note:
The end rail post shall be set back as required for the terminal rail section.

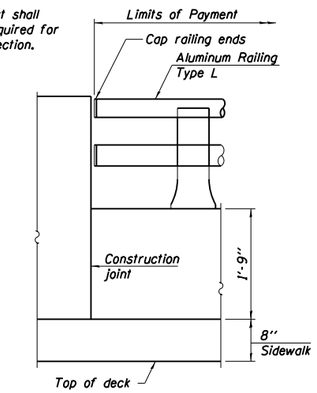

RAIL END TREATMENT FOR TYPE 5 AND 6 TERMINAL

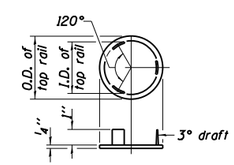

CAST END CAP
For top rail

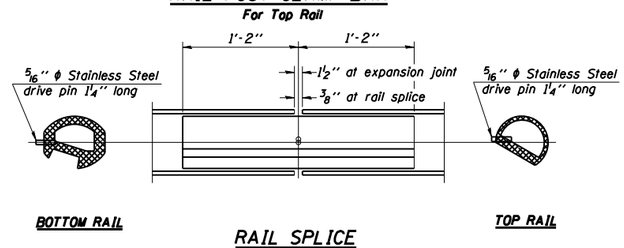

RAIL SPLICE

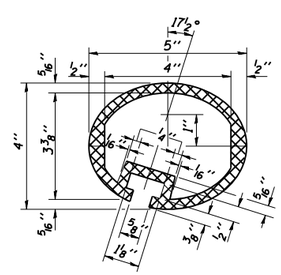

SEC. THRU ELLIPTICAL RAIL SECTION

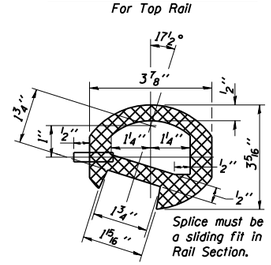

SEC. THRU SPLICE

Notes:
All Posts shall be normal to parapet.
All joints in rail shall be spliced per detail.
All exposed rail ends shall be capped per detail.
Provide 1-⅛" and 2-1/16" Aluminum Shims for 25% of the Posts. Rail elements shall be parallel to Grade-high spots will be ground and low spots shimmed.
See sheet of for rail post spacing.

FOR INFORMATION ONLY

R-20 1-27-12 (7'-0" to 10'-0" Post spacing)

FILE NAME = c:\pw_work\pwidot\gorengautab\d0101671\056-0049.dgn	USER NAME = Gorengautab	DESIGNED - MVT	REVISED -	STATE OF ILLINOIS DEPARTMENT OF TRANSPORTATION	ILL 120 (ELM STREET) OVER FOX RIVER ALUMINUM RAILING TYPE L S.N. 056-0049	F.A.P. RTE.	SECTION	COUNTY	TOTAL SHEETS / SHEET NO.
		DRAWN - MVT	REVISED -			333	14X-1-3(13)	McHENRY	29 / 12
	PLOT SCALE = 100.0000 ' / in.	CHECKED -	REVISED -					CONTRACT NO. 60X22	
Default	PLOT DATE = 2/19/2014	DATE -	REVISED -		SCALE: SHEET 9 OF SHEETS STA. TO STA.		ILLINOIS FED. AID PROJECT		

056-0049.dgn 2/19/2014 1:10:40 PM User=Gorengautab