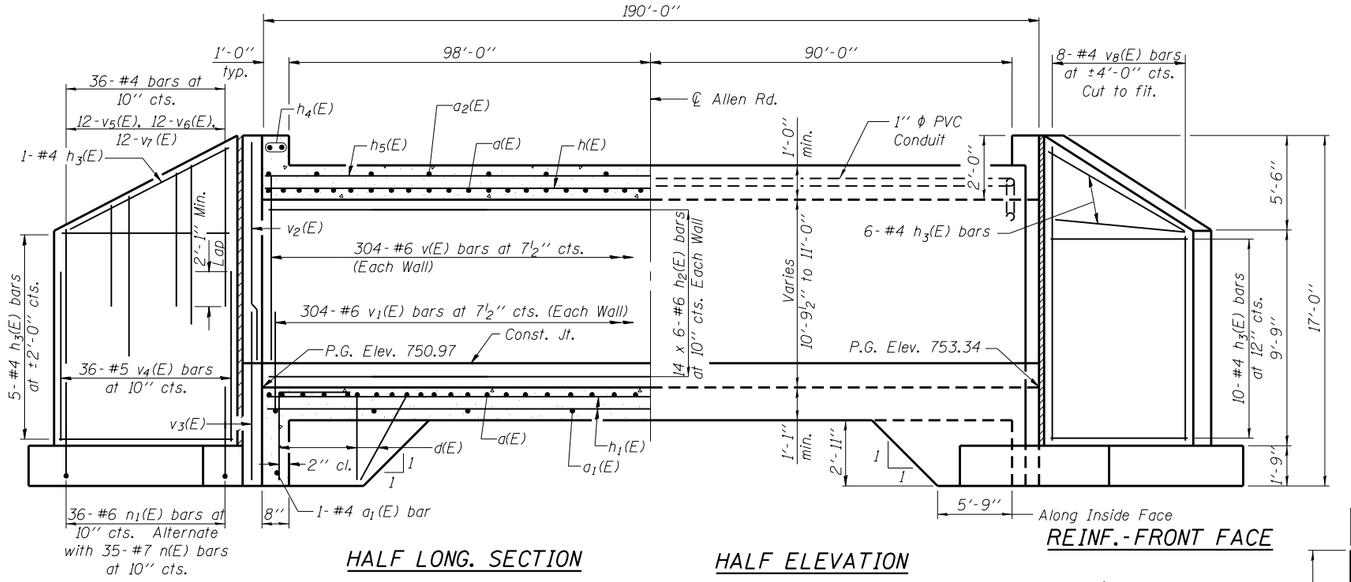

REINF.-BACK FACE

HALF LONG. SECTION

HALF ELEVATION

REINF.-FRONT FACE

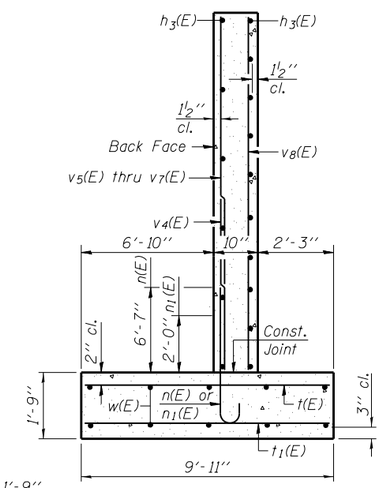

SECTION A-A

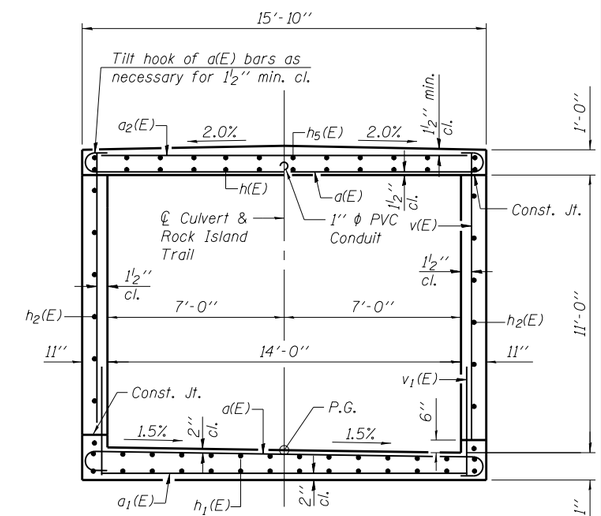

SECTION THRU BARREL

(Looking Southeast)

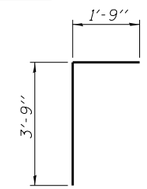

BAR d(E)

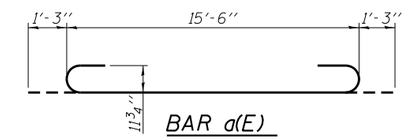

BAR a(E)

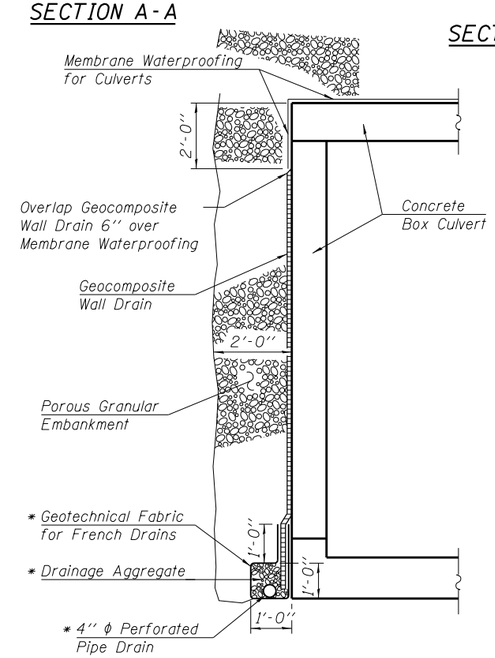

BACKFILL DETAIL

* Included in the cost of Pipe Underdrains for Structures 4".

** Cost included with Concrete Box Culverts.

MIN. BAR LAP

#4 bar = 2'-1"
#5 bar = 2'-7"
#6 bar = 3'-6"
#8 bar = 5'-5"

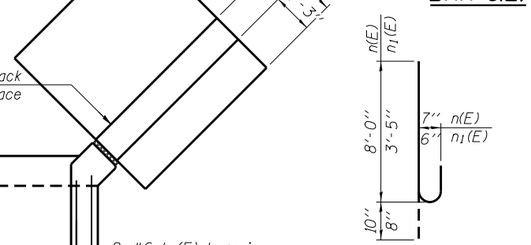

BARS n(E) and n1(E)

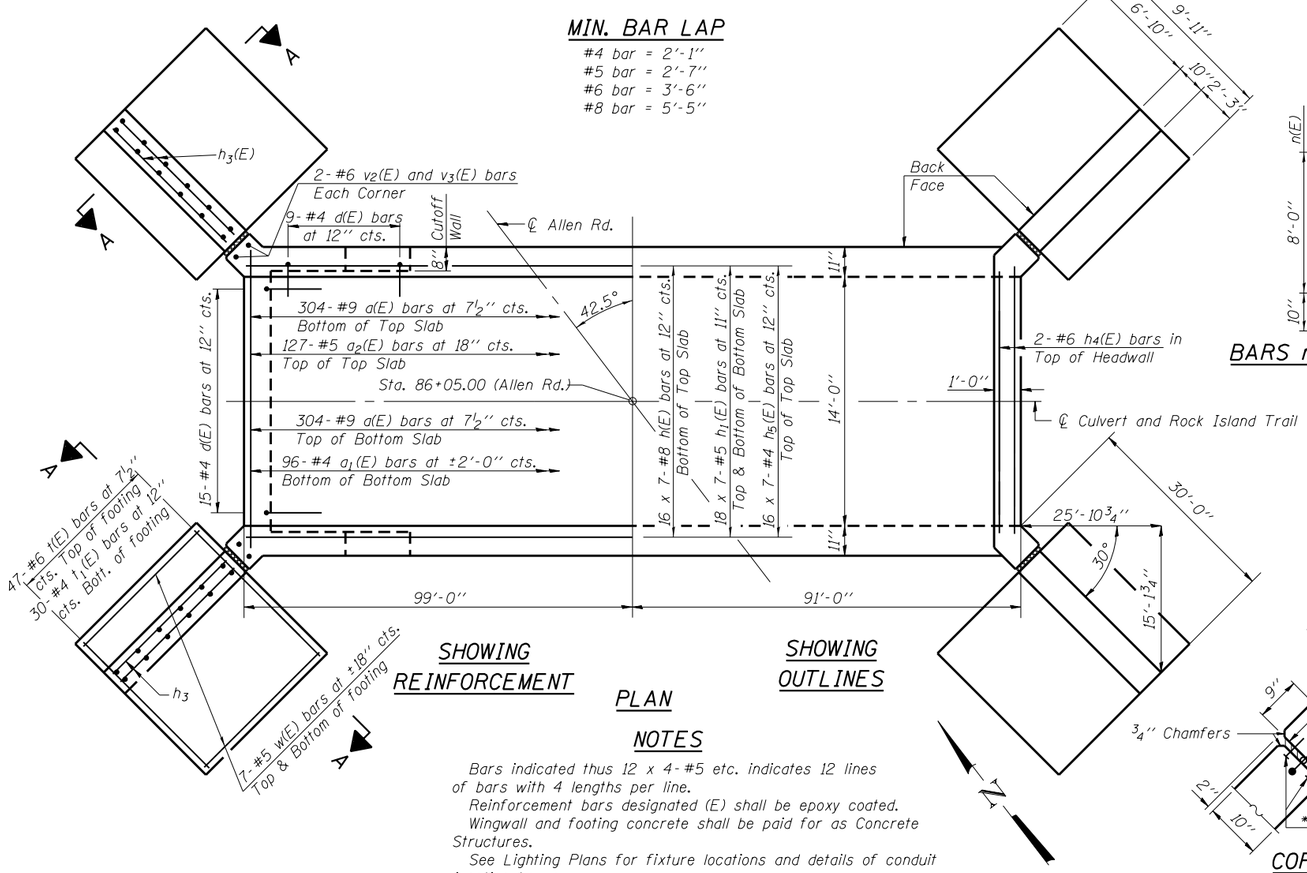

SHOWING REINFORCEMENT

SHOWING OUTLINES

PLAN

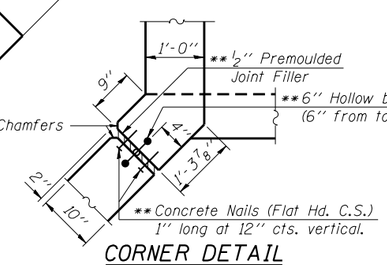

CORNER DETAIL

NOTES

Bars indicated thus 12 x 4-#5 etc. indicates 12 lines of bars with 4 lengths per line.

Reinforcement bars designated (E) shall be epoxy coated.

Wingwall and footing concrete shall be paid for as Concrete Structures.

See Lighting Plans for fixture locations and details of conduit junction boxes.

Note:

All drainage system components shall extend to 2'-0" from the end of each wingwall. The pipe drain shall slope to the northwest wingwalls, where an outlet pipe shall extend beyond the end of the wingwall into the drainage inlets. The outlet pipe shall be paid for as Pipe Underdrains for Structures 4".

BILL OF MATERIAL

Bar	No.	Size	Length	Shape
d(E)	608	#9	18'-0"	
a1(E)	98	#4	15'-6"	
a2(E)	127	#5	15'-6"	
d(E)	66	#4	5'-6"	
h(E)	112	#8	31'-9"	
h1(E)	252	#5	29'-4"	
h2(E)	168	#6	34'-7"	
h3(E)	88	#4	28'-11"	
h4(E)	4	#6	15'-6"	
h5(E)	112	#4	28'-11"	
n(E)	140	#7	8'-10"	
n1(E)	144	#6	4'-1"	
t(E)	188	#6	9'-7"	
t1(E)	120	#4	9'-7"	
v(E)	608	#6	11'-3"	
v1(E)	608	#6	4'-5"	
v2(E)	8	#6	12'-3"	
v3(E)	8	#6	7'-4"	
v4(E)	144	#5	7'-5"	
v5(E)	48	#4	9'-9"	
v6(E)	48	#4	7'-11"	
v7(E)	48	#4	6'-1"	
v8(E)	32	#4	14'-11"	
w(E)	56	#5	28'-11"	
Concrete Box Culverts			Cu. Yd.	400.3
Concrete Structures			Cu. Yd.	120.3
Reinforcement Bars, Epoxy Coated			Pound	95720

FILE NAME = 0727004-68683-002-Culvert Details.dgn	USER NAME = baswanson	DESIGNED - BAS	REVISED
MAURER-STUTZ ENGINEERS SURVEYORS		CHECKED - CMB	REVISED
	PLOT SCALE =	DRAWN - SGM	REVISED
	PLOT DATE = 3/11/2014	CHECKED - BAS	REVISED

STATE OF ILLINOIS
DEPARTMENT OF TRANSPORTATION

BOX CULVERT DETAILS
STRUCTURE NO. 072-7004

SHEET NO. 2 OF 4 SHEETS

F.A.U. RTE.	SECTION	COUNTY	TOTAL SHEETS	SHEET NO.
6584/ 6585	105	PEORIA	487	325
		CONTRACT NO. 68683		
		ILLINOIS FED. AID PROJECT		