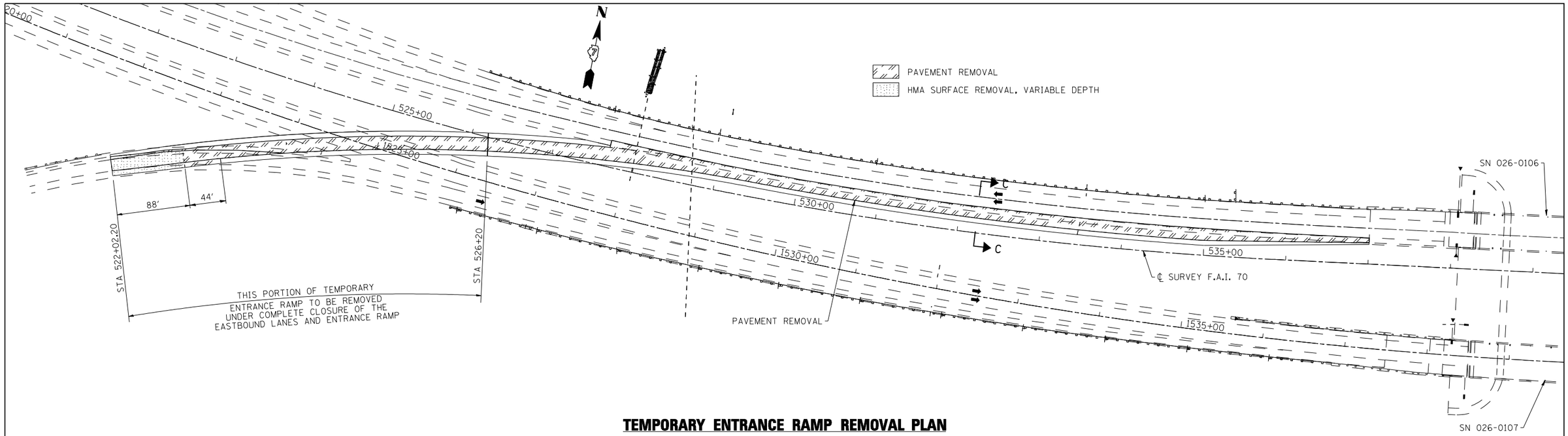

TEMPORARY ENTRANCE RAMP REMOVAL PLAN

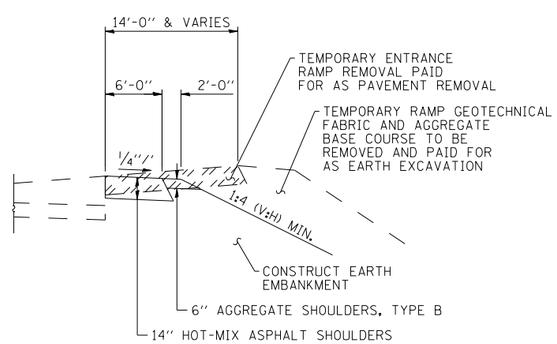

SECTION C–C

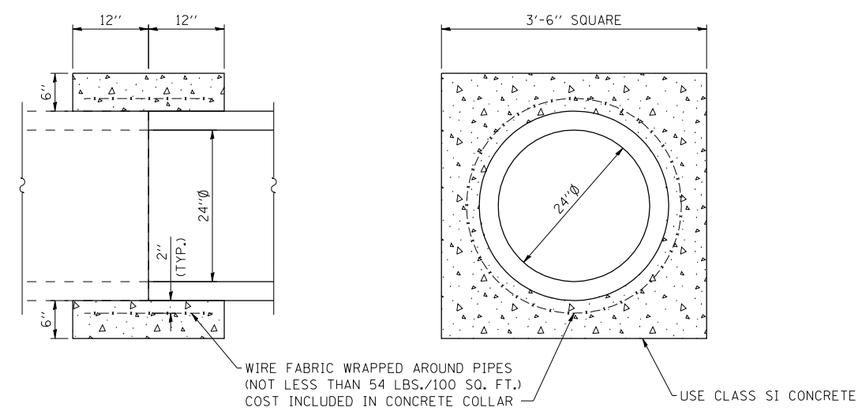

ELEVATION **END VIEW**

NOTE: COLLAR WORK WILL BE PAID FOR AT THE CONTRACT UNIT PRICE PER CUBIC YARD FOR CONCRETE COLLAR

CONCRETE COLLAR DETAILS

PRINT DRIVER = I_PD_E_B_0.pc3
PEN TABLE = DOT_VERDZTBL
PLOT SCALE = 1.0000
FILE NAME = 0774175-sht-rmp073.dgn

ESCA CONSULTANTS, INC. CIVIL & STRUCTURAL ENGINEERS	USER NAME = has	DESIGNED - ELH	REVISED -	STATE OF ILLINOIS DEPARTMENT OF TRANSPORTATION	TEMPORARY ENTRANCE RAMP DETAILS	F.A.I. RTE.	SECTION	COUNTY	TOTAL SHEETS / SHEET NO.
	ESCA PROJECT NO. 1000.05	DRAWN - HAS	REVISED -			70	(26-3B-1, 3B-1(3))BR	FAYETTE	277 / 46
	PLOT SCALE = 0:2 ':' / IN.	CHECKED - RDP	REVISED -					CONTRACT NO. 74175	
	PLOT DATE = 1/29/2014 1:55:50 PM	DATE - 11/13	REVISED -		SCALE: NONE / SHEET NO. 1 OF 2 SHEETS / STA. TO STA.	FED. ROAD DIST. NO.	ILLINOIS	FED. AID PROJECT	