FOR INFORMATION ONLY

STATE OF ILLINOIS
DEPARTMENT OF TRANSPORTATION

SHEET NO. 15
24 SHEETS

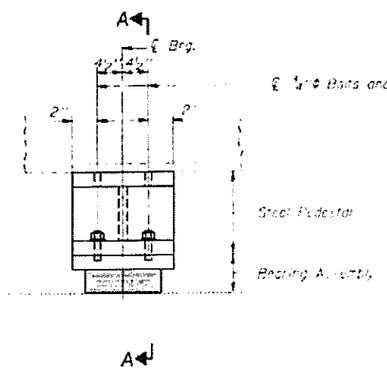

ELEVATION AT PIER

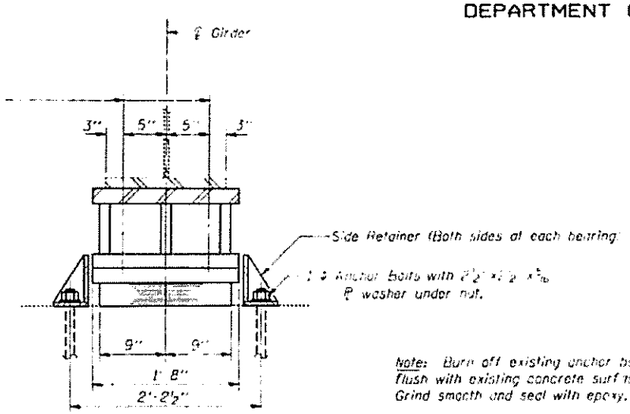

SECTION A-A

Note: Burn off existing anchor bolts flush with existing concrete surface. Grind smooth and seal with epoxy.

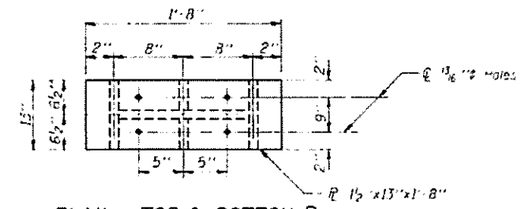

PLAN - TOP & BOTTOM ℙ

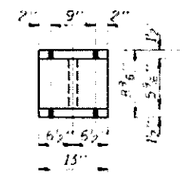

END VIEW

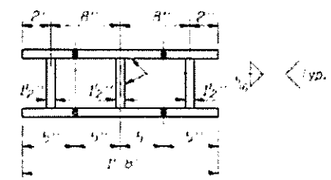

ELEVATION
No. Req'd: 24

TYPE I ELASTOMERIC EXP. BRG.

Note: Before installing the new bearings, remove the top ℙ of the existing bearing assembly from the bottom flange of the girders and grind smooth all weld material remaining on the bottom flange. Cost is incidental to "F.&E. Structural Steel".

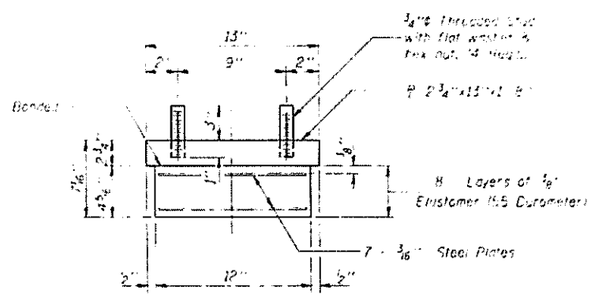

BEARING ASSEMBLY

NOTE: Shim plates shall not be placed under bearing assembly

BEAM REACTIONS

Live Load	71.3 k
Dead Load	134.0 k
Impact	15.2 k

Note: Diaphragm removal and replacement may be required to facilitate drilling holes in bottom flange for bearing attachment. Cost is incidental to "F.&E. Struct. Steel".

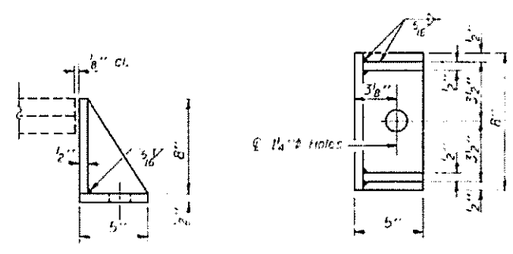

SIDE RETAINER

(48 Required)

Equivalent rolled angle with stiffeners will be allowed in lieu of welded plates.

Note:
New steel pedestals, side retainers and anchor bolts are included in "F. & E. Structural Steel".

BILL OF MATERIAL

(For Two Structures)

Item	Unit	Total
Elastomeric Bearing Assembly Type I (Special)	Each	24
Furnishing and Erecting Structural Steel	Lbs.	9640

PIERS 1 & 3
ELASTOMERIC BEARINGS (SPECIAL)

F.A.I. RT. 64 SEC. 82-8BI-(1,2)
ST. CLAIR COUNTY
STA. 145 + 10 - W.B. (082-0186)
STA. 1046 + 44 - E.B. (082-0187)

DESIGNED	C.H.M.
CHECKED	R.A.B.
DRAWN	T. B. Carbonell
CHECKED	C.H.M.

19
EXAMINED
ENGINEER OF STRUCTURAL SERVICES
PASSED
ENGINEER OF MATERIALS AND STRUCTURES
APPROVED
DIRECTOR OF HIGHWAYS

I-2-E1 12 1 83

(S.N. 082-0186 & 082-0187)

FILE NAME = $FILEL$	USER NAME = $USER$	DESIGNED - ___	REVISED - ___	STATE OF ILLINOIS DEPARTMENT OF TRANSPORTATION	EXISTING BEARING DETAILS (SN-082-0186, 0187)	F.A. RTE. 64	SECTION 82-8B-P	COUNTY ST CLAIR	TOTAL SHEETS 29 / SHEET NO. 18
		DRAWN - ___	REVISED - ___					CONTRACT NO. 76C63	
	PLOT SCALE = $SCALE$	CHECKED - ___	REVISED - ___		SCALE: N/A / SHEET NO. __ OF __ SHEETS / STA. _____ TO STA. _____	FED. ROAD DIST. NO. _	ILLINOIS	FED. AID PROJECT	
	PLOT DATE = $DATE$	DATE - _____	REVISED - ___						