NOTES:

1. ELEVATIONS GIVEN ARE AT THE EDGE OF PAVEMENT, UNLESS OTHERWISE INDICATED.

LEGEND

⊕ SPOT ELEVATION LOCATION

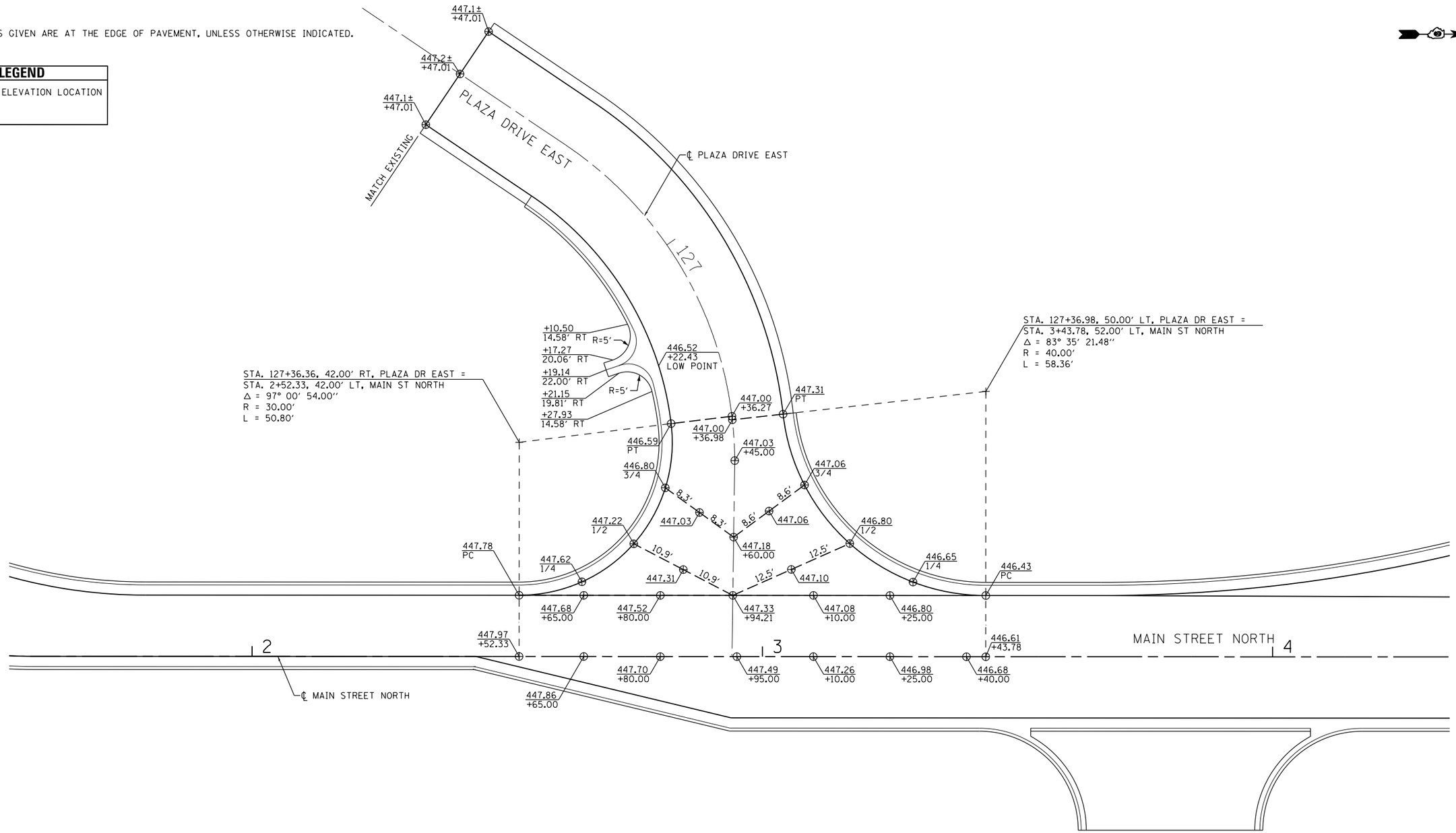

FILE NAME = c:\pw_work\pwidot\lavenderba\d0363618\D78221-sht-intersec-25.dgn	USER NAME = $USER$	DESIGNED - KN	REVISED -	STATE OF ILLINOIS DEPARTMENT OF TRANSPORTATION	INTERSECTION DETAILS PLAZA DRIVE EAST AND MAIN STREET NORTH	F.A.P. RTE.	SECTION	COUNTY	TOTAL SHEETS	SHEET NO.
		DRAWN - AS	REVISED -			331	(1-3)R-2, N-4, TS-4, HBK-1	WILLIAMSON	733	301
	PLOT SCALE = 20.0000 ' / in.	CHECKED -	REVISED -			DRAWING NO. ID-25		CONTRACT NO. 78221		
	PLOT DATE = 1/31/2014	DATE -	REVISED -		SCALE: SHEET NO. 25 OF 30 SHEETS STA. TO STA.		ILLINOIS FED. AID PROJECT			

NOTES:

1. ELEVATIONS GIVEN ARE AT THE EDGE OF PAVEMENT, UNLESS OTHERWISE INDICATED.

LEGEND

⊕ SPOT ELEVATION LOCATION

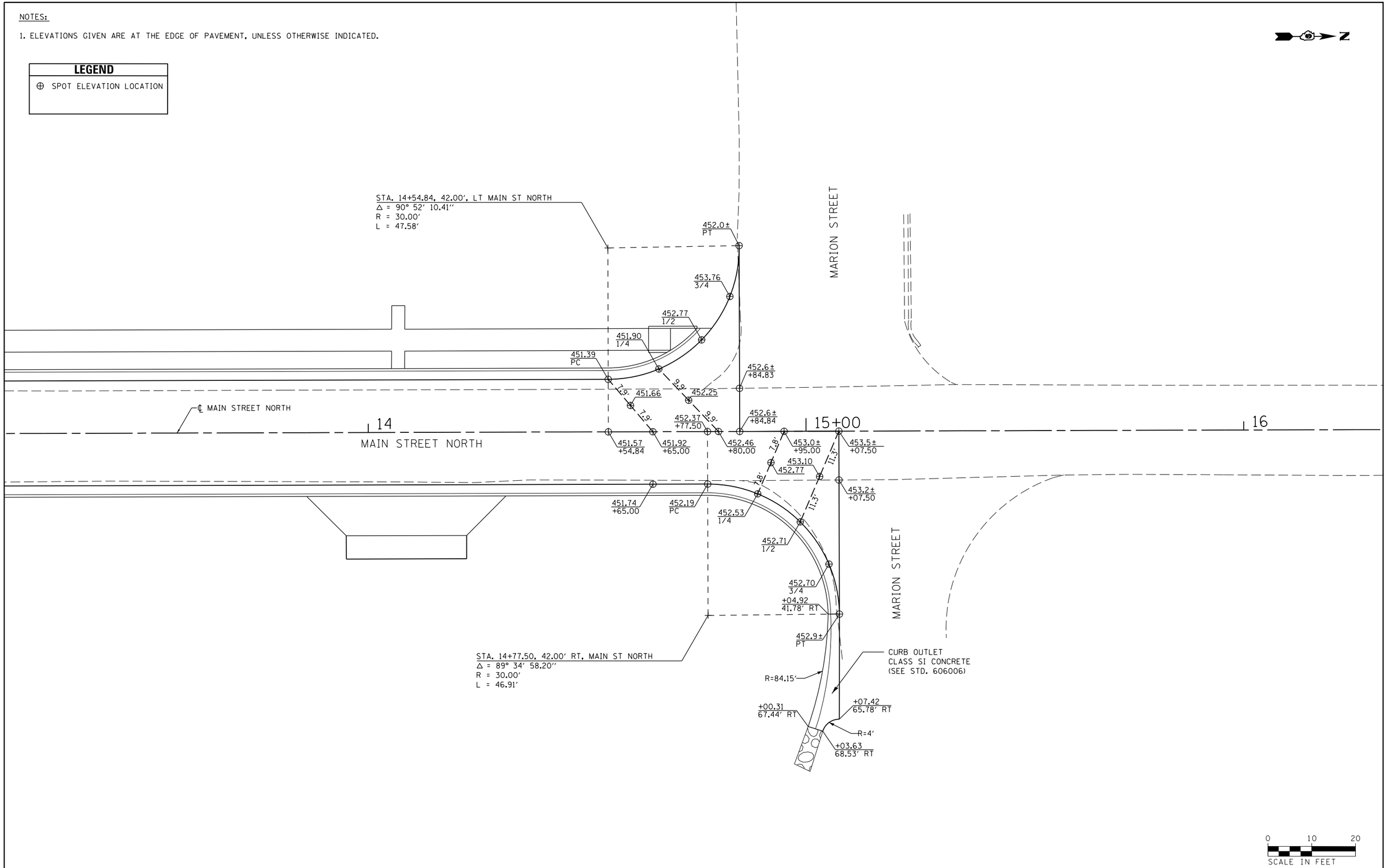

FILE NAME = c:\pw_work\pwidot\lavenderba\d0363618\D978221-sht-intersec-26.dgn	USER NAME = $USER$	DESIGNED - KN	REVISED -	STATE OF ILLINOIS DEPARTMENT OF TRANSPORTATION	INTERSECTION DETAILS MAIN STREET NORTH AND MARION STREET	F.A.P. RTE.	SECTION	COUNTY	TOTAL SHEETS	SHEET NO.
		DRAWN - AS	REVISED -			331	(1-3)R-2, N-4, TS-4, HBK-1	WILLIAMSON	733	302
	PLOT SCALE = 20.0000 ' / in.	CHECKED -	REVISED -			DRAWING NO. ID-26		CONTRACT NO. 78221		
	PLOT DATE = 1/31/2014	DATE -	REVISED -		SCALE: SHEET NO. 26 OF 30 SHEETS STA. TO STA.		ILLINOIS FED. AID PROJECT			

NOTES:

1. ELEVATIONS GIVEN ARE AT THE EDGE OF PAVEMENT, UNLESS OTHERWISE INDICATED.

LEGEND

⊕ SPOT ELEVATION LOCATION

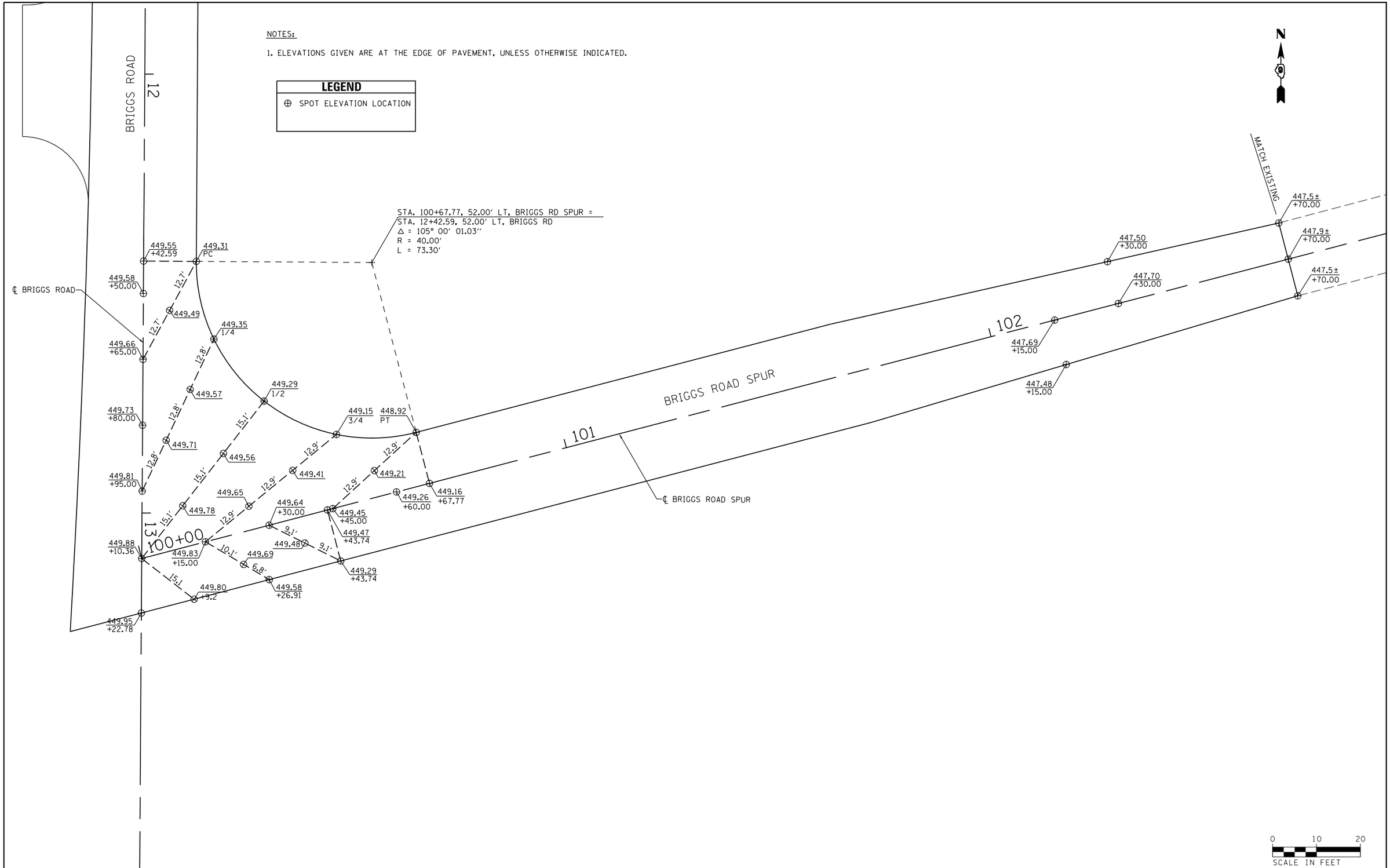

FILE NAME =	USER NAME = $USER$	DESIGNED - KN	REVISED -	STATE OF ILLINOIS DEPARTMENT OF TRANSPORTATION	INTERSECTION DETAILS BRIGGS ROAD AND BRIGGS ROAD SPUR	F.A.P. RTE.	SECTION	COUNTY	TOTAL SHEETS	SHEET NO.
c:\pw_work\pwidot\lavenderba\d0363618\D78221-sht-intersec-27.dgn		DRAWN - AS	REVISED -			331	(1-3)R-2, N-4, TS-4, HBK-1	WILLIAMSON	733	303
	PLOT SCALE = 19.9992 ' / in.	CHECKED -	REVISED -			DRAWING NO. ID-27		CONTRACT NO. 78221		
	PLOT DATE = 1/31/2014	DATE -	REVISED -		SCALE: SHEET NO. 27 OF 30 SHEETS STA. TO STA.		ILLINOIS FED. AID PROJECT			

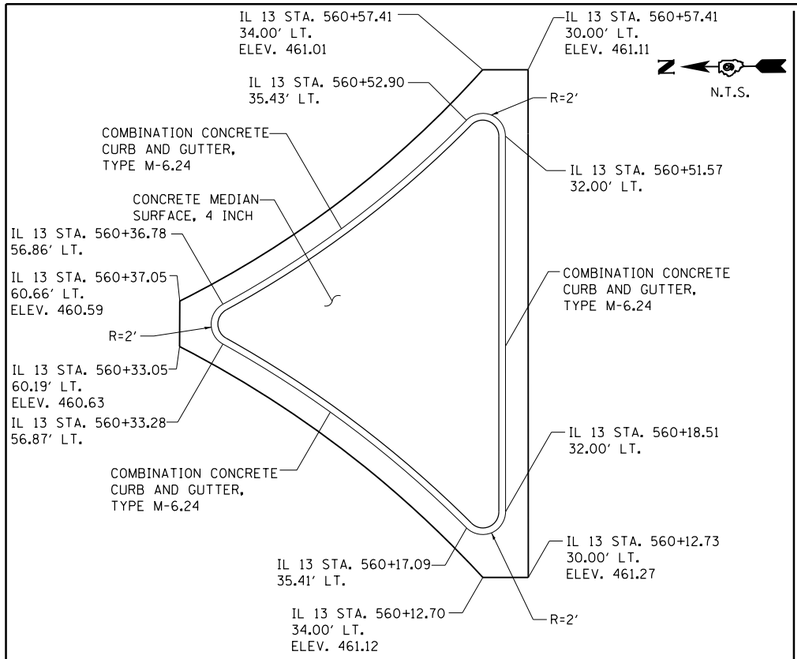

SAMUEL RD NORTH

NOTES:

1. STATION OFFSET CALLOUTS FOR ALL IL 13 LOCATIONS
   USE IL 13 WB ALIGNMENT.

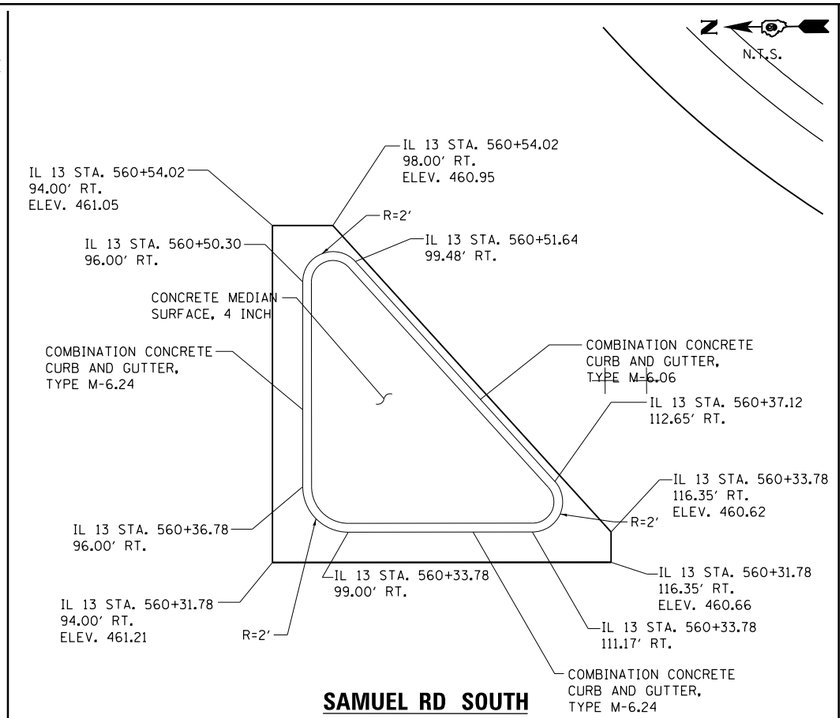

SAMUEL RD SOUTH

NOTES:

1. STATION OFFSET CALLOUTS FOR ALL IL 13 LOCATIONS
   USE IL 13 WB ALIGNMENT.

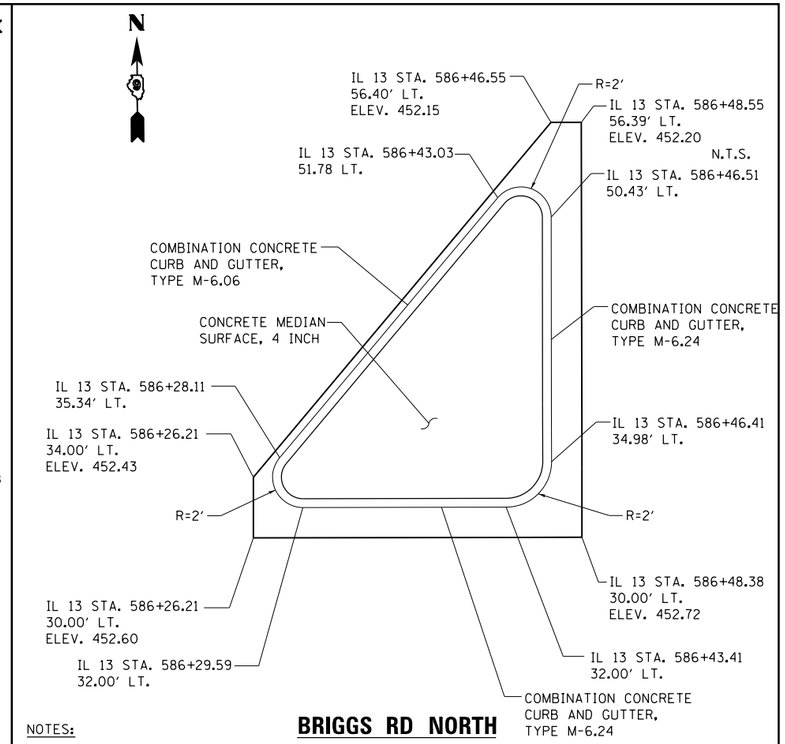

BRIGGS RD NORTH

NOTES:

1. STATION OFFSET CALLOUTS FOR ALL IL 13 LOCATIONS
   USE IL 13 WB ALIGNMENT.

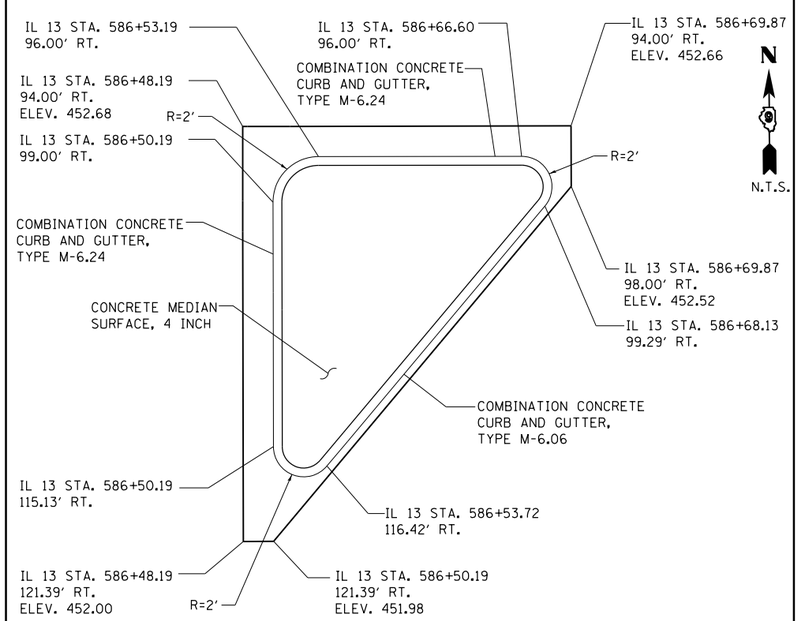

BRIGGS RD SOUTH

NOTES:

1. STATION OFFSET CALLOUTS FOR ALL IL 13 LOCATIONS
   USE IL 13 WB ALIGNMENT.

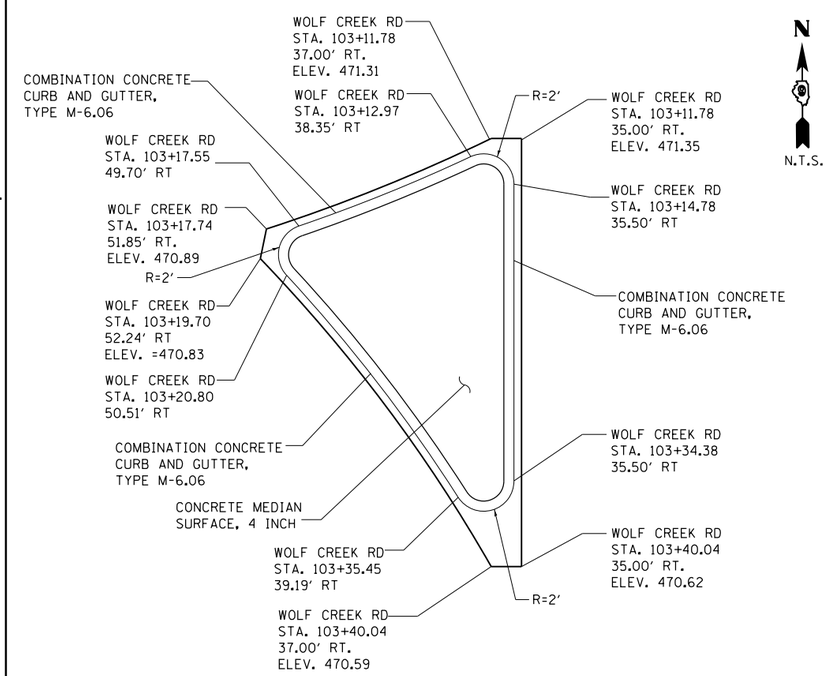

WOLF CREEK AND RAMP D

FILE NAME = c:\pw_work\pwidot\lavenderba\d0363618\D78221-sht-intersec-28.dgn	USER NAME = $USER$	DESIGNED - KN	REVISED -
		DRAWN - AS	REVISED -
	PLOT SCALE = 40.0000 ' / in.	CHECKED -	REVISED -
	PLOT DATE = 1/31/2014	DATE -	REVISED -

STATE OF ILLINOIS
DEPARTMENT OF TRANSPORTATION

INTERSECTION DETAILS
ISLAND, MEDIAN AND NOSE GEOMETRICS

SCALE: | SHEET NO. 28 OF 30 SHEETS | STA. | TO STA.

F.A.P. RTE.	SECTION	COUNTY	TOTAL SHEETS	SHEET NO.
331	(1-3)R-2, N-4, TS-4, HBK-1	WILLIAMSON	733	304
DRAWING NO. ID-28		CONTRACT NO. 78221		
		ILLINOIS FED. AID PROJECT		

N.T.S.

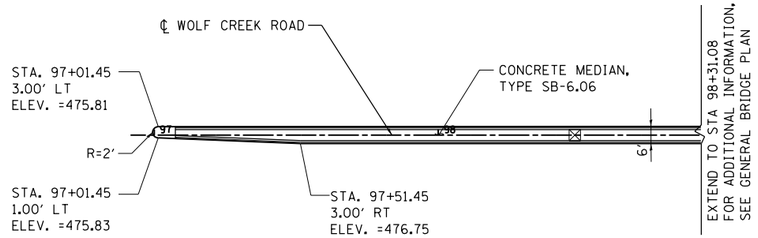

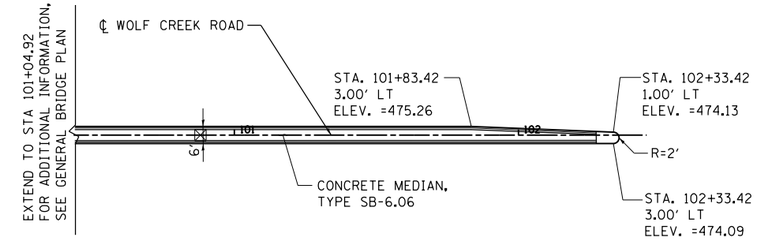

WOLF CREEK RD BRIDGE APPROACH

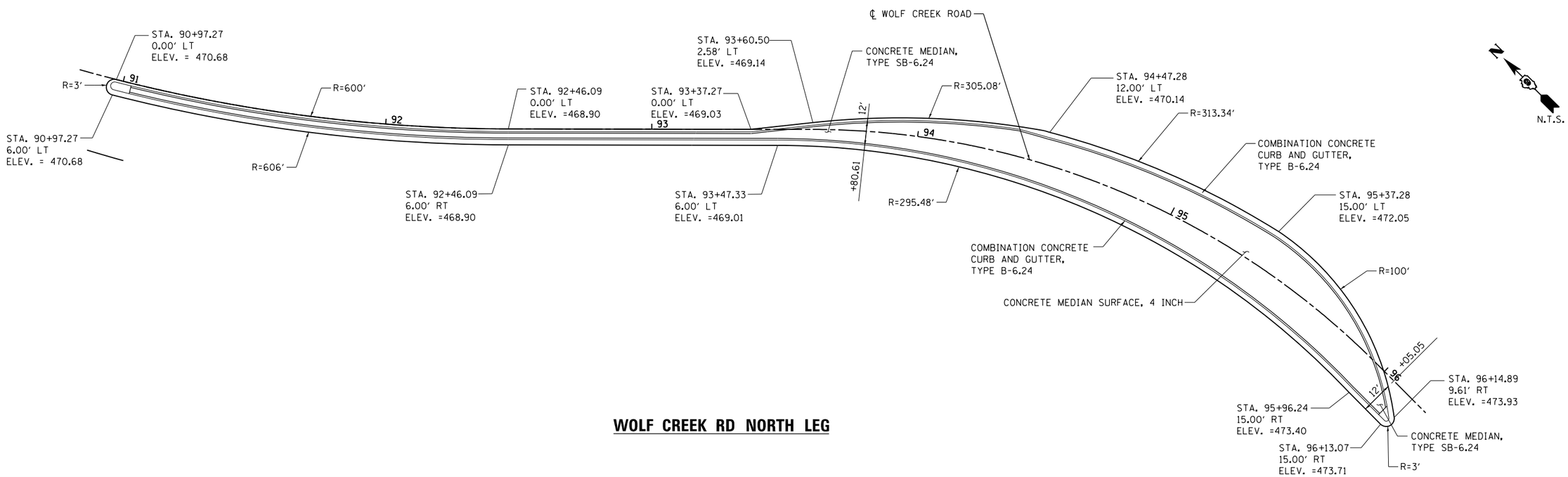

WOLF CREEK RD NORTH LEG

FILE NAME = c:\pw_work\pwidot\lavenderba\d0363618\D978221-sht-intersec-29.dgn	USER NAME = $USER$	DESIGNED - KN	REVISED -	STATE OF ILLINOIS DEPARTMENT OF TRANSPORTATION	INTERSECTION DETAILS ISLAND, MEDIAN AND NOSE GEOMETRICS	F.A.P. RTE.	SECTION	COUNTY	TOTAL SHEETS / SHEET NO.
		DRAWN - AS	REVISED -			331	(1-3)R-2, N-4, TS-4, HBK-1	WILLIAMSON	733 / 305
	PLOT SCALE = 40.0000 ' / in.	CHECKED -	REVISED -			DRAWING NO. ID-29		CONTRACT NO. 78221	
	PLOT DATE = 1/31/2014	DATE -	REVISED -		SCALE: SHEET NO. 29 OF 30 SHEETS STA. TO STA.			ILLINOIS FED. AID PROJECT	

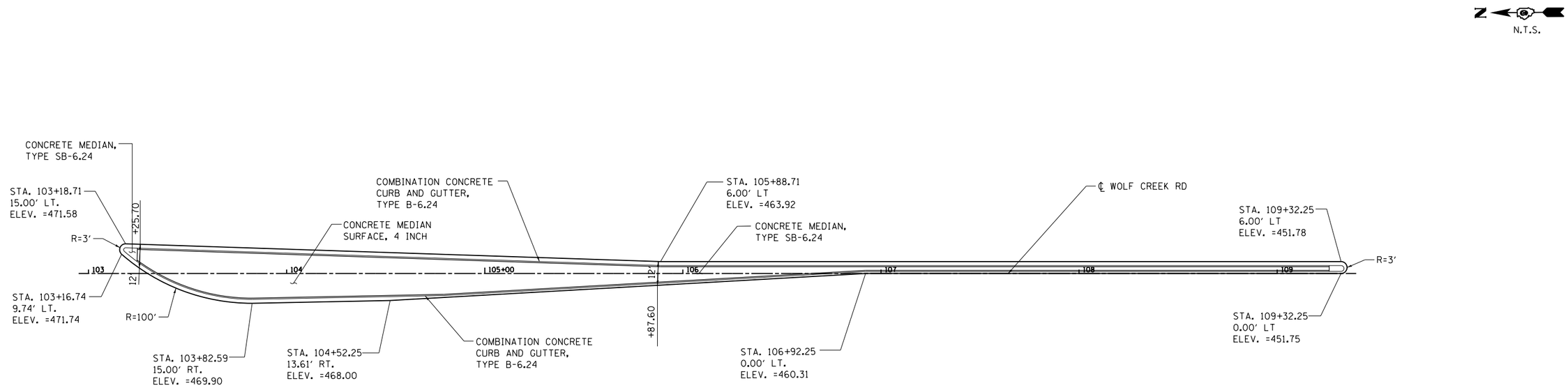

WOLF CREEK RD SOUTH LEG

FILE NAME = c:\pw_work\pwidot\lavenderba\d0363618\D978221-sht-intersec-30.dgn	USER NAME = $USER$	DESIGNED - KN	REVISED -	STATE OF ILLINOIS DEPARTMENT OF TRANSPORTATION	INTERSECTION DETAILS ISLAND, MEDIAN AND NOSE GEOMETRICS	F.A.P. RTE. 331	SECTION (1-3)R-2, N-4, TS-4, HBK-1	COUNTY WILLIAMSON	TOTAL SHEETS 733 / SHEET NO. 306
		DRAWN - AS	REVISED -						
	PLOT SCALE = 40.0000 ' / in.	CHECKED -	REVISED -			DRAWING NO. ID-30		CONTRACT NO. 78221	
	PLOT DATE = 1/31/2014	DATE -	REVISED -		SCALE: SHEET NO. 30 OF 30 SHEETS STA. TO STA.		ILLINOIS	FED. AID PROJECT	

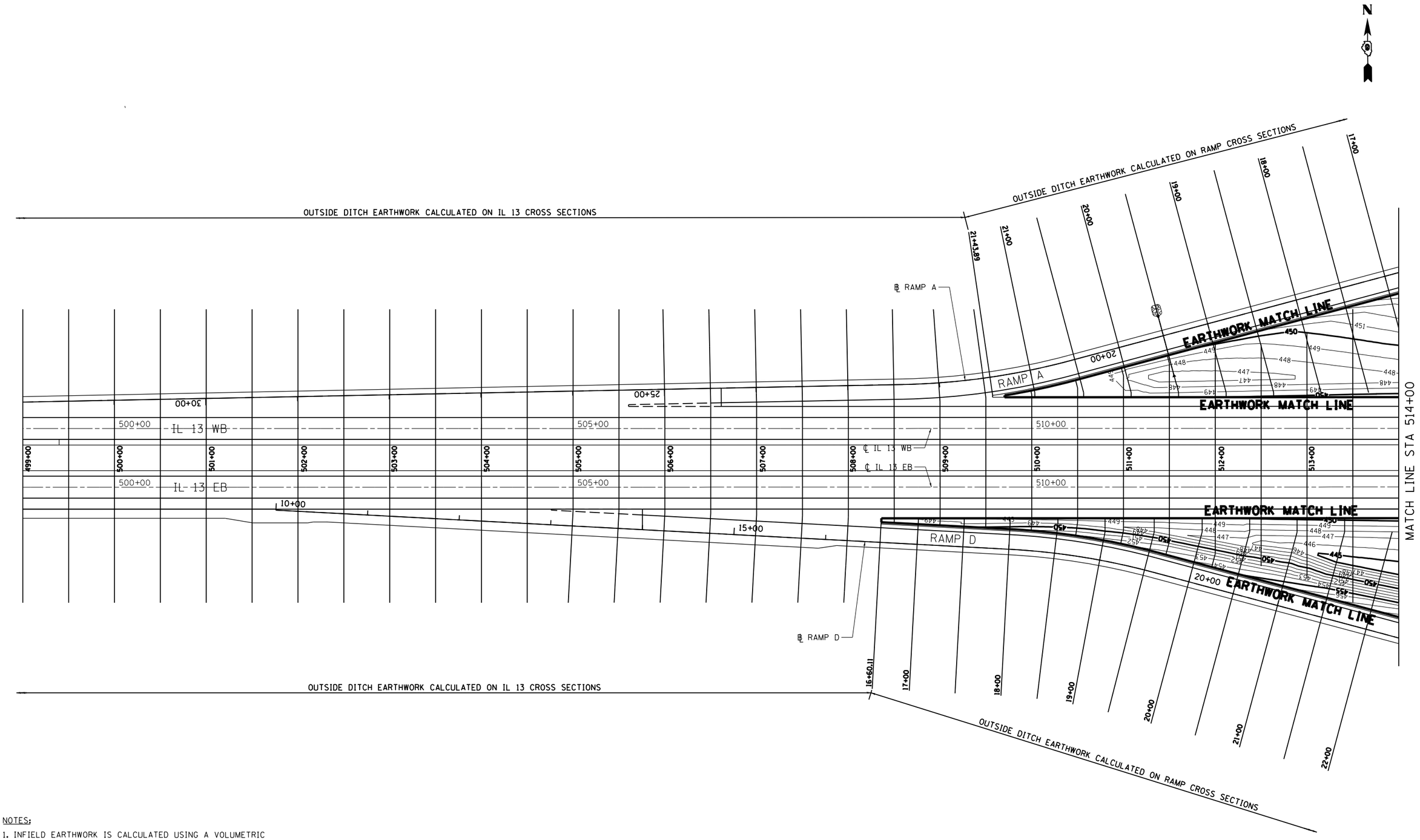

NOTES;

1. INFIELD EARTHWORK IS CALCULATED USING A VOLUMETRIC SUBTRACTION BETWEEN THE PROPOSED INFIELD SURFACE AND THE EXISTING SURFACE. AREAS OUTSIDE EARTHWORK MATCHLINES ON CROSS SECTIONS ARE SHOWN FOR INFORMATIONAL ONLY.

0 50 100
SCALE IN FEET

FILE NAME = c:\pw_work\pwidot\lavenderba\d0363618\D478221-sht-grade-01.dgn	USER NAME = $USER$	DESIGNED - KN	REVISED -
		DRAWN - AS	REVISED -
	PLOT SCALE = 100.0000 ' / in.	CHECKED -	REVISED -
	PLOT DATE = 1/31/2014	DATE -	REVISED -

STATE OF ILLINOIS
DEPARTMENT OF TRANSPORTATION

INTERCHANGE GRADING PLANS
IL 13

SCALE: 1"=50' | SHEET NO. 1 OF 5 SHEETS | STA. 499+00.00 TO STA. 514+00.00

F.A.P. RTE.	SECTION	COUNTY	TOTAL SHEETS	SHEET NO.
331	(1-3)R-2, N-4, TS-4, HBK-1	WILLIAMSON	733	307
DRAWING NO. GP-01		CONTRACT NO. 78221		
		ILLINOIS FED. AID PROJECT		

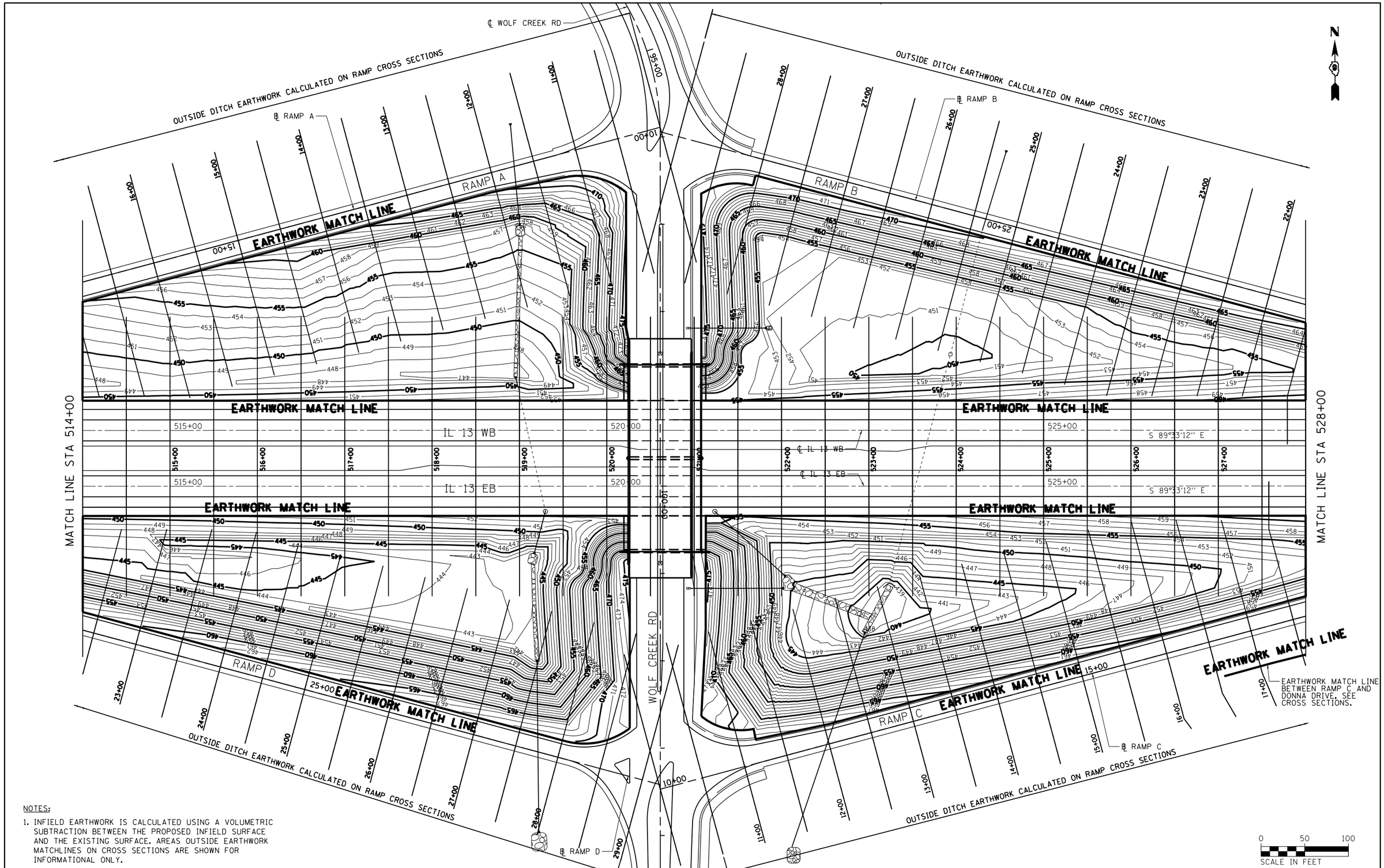

NOTES:

1. INFIELD EARTHWORK IS CALCULATED USING A VOLUMETRIC SUBTRACTION BETWEEN THE PROPOSED INFIELD SURFACE AND THE EXISTING SURFACE. AREAS OUTSIDE EARTHWORK MATCHLINES ON CROSS SECTIONS ARE SHOWN FOR INFORMATIONAL ONLY.

FILE NAME =	USER NAME = $USER$	DESIGNED - KN	REVISED -
c:\pw_work\pwidot\lavenderba\d0363618\D978221-sht-grade-02.dgn		DRAWN - AS	REVISED -
	PLOT SCALE = 100.0000 ' / in.	CHECKED -	REVISED -
	PLOT DATE = 1/31/2014	DATE -	REVISED -

STATE OF ILLINOIS
DEPARTMENT OF TRANSPORTATION

INTERCHANGE GRADING PLANS
IL 13

SCALE: 1"=50' | SHEET NO. 2 OF 5 SHEETS | STA. 514+00.00 TO STA. 528+00.00

F.A.P. RTE.	SECTION	COUNTY	TOTAL SHEETS	SHEET NO.
331	(1-3)R-2, N-4, TS-4, HBK-1	WILLIAMSON	733	308
DRAWING NO.	GP-02	CONTRACT NO. 78221		
		ILLINOIS FED. AID PROJECT		

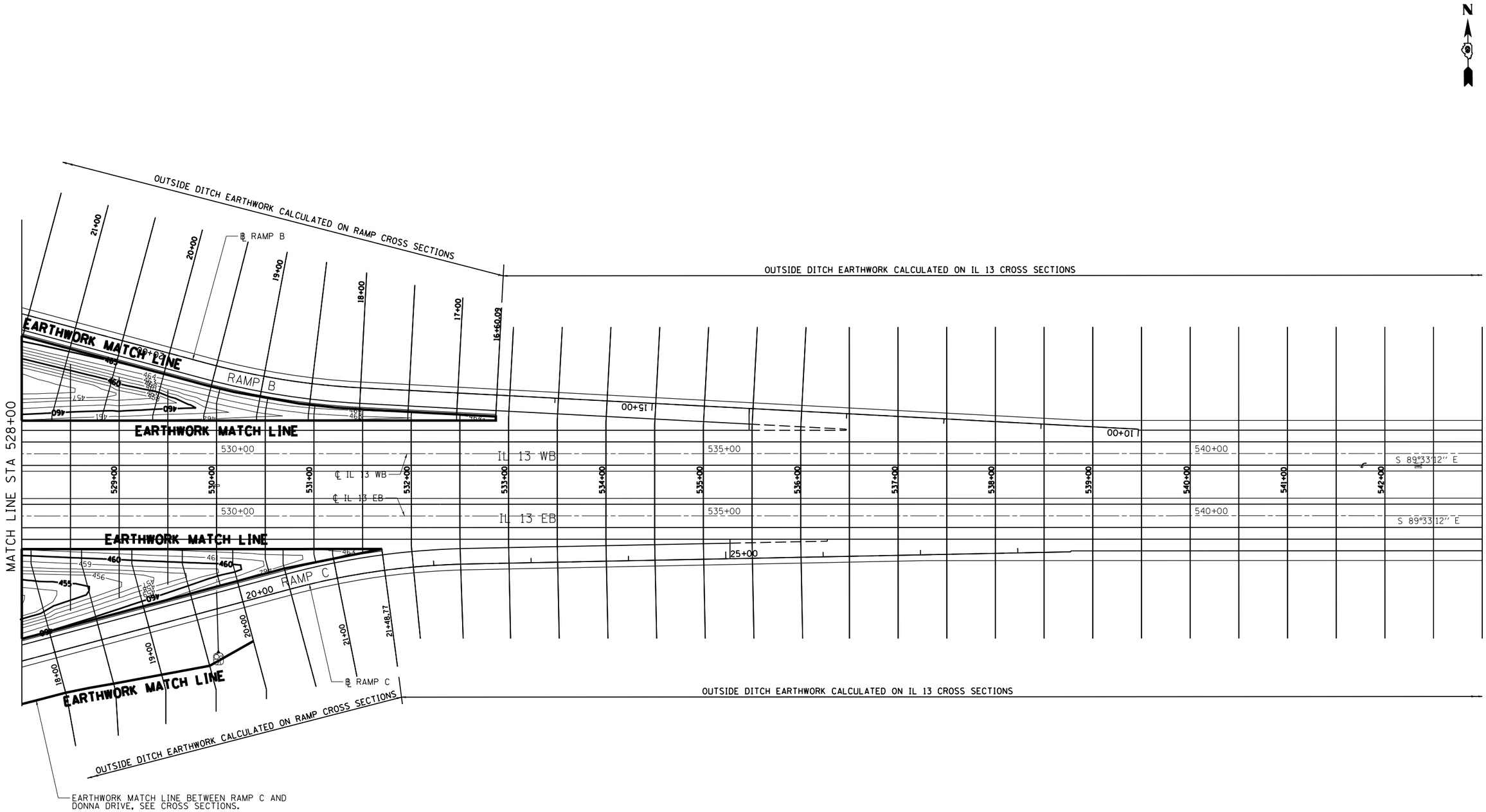

NOTES:

1. INFIELD EARTHWORK IS CALCULATED USING A VOLUMETRIC SUBTRACTION BETWEEN THE PROPOSED INFIELD SURFACE AND THE EXISTING SURFACE. AREAS OUTSIDE EARTHWORK MATCHLINES ON CROSS SECTIONS ARE SHOWN FOR INFORMATIONAL ONLY.

0 50 100
SCALE IN FEET

FILE NAME = c:\pw_work\pwidot\lavenderba\d0363618\D78221-sht-grade-03.dgn	USER NAME = $USER$	DESIGNED - KN	REVISED -
		DRAWN - AS	REVISED -
	PLOT SCALE = 100.0000 ' / in.	CHECKED -	REVISED -
	PLOT DATE = 1/31/2014	DATE -	REVISED -

STATE OF ILLINOIS
DEPARTMENT OF TRANSPORTATION

INTERCHANGE GRADING PLANS
IL 13

SCALE: 1"=50' | SHEET NO. 3 OF 5 SHEETS | STA. 528+00.00 TO STA. 543+00.00

F.A.P. RTE.	SECTION	COUNTY	TOTAL SHEETS	SHEET NO.
331	(1-3)R-2, N-4, TS-4, HBK-1	WILLIAMSON	733	309
DRAWING NO. GP-03		CONTRACT NO. 78221		
		ILLINOIS FED. AID PROJECT		

NOTES:

1. INFIELD EARTHWORK IS CALCULATED USING A VOLUMETRIC SUBTRACTION BETWEEN THE PROPOSED INFIELD SURFACE AND THE EXISTING SURFACE. AREAS OUTSIDE EARTHWORK MATCHLINES ON CROSS SECTIONS ARE SHOWN FOR INFORMATIONAL ONLY.

FILE NAME =	USER NAME = $USER$	DESIGNED - KN	REVISED -
c:\pw_work\pwidot\lavenderba\d0363618\D78221-sht-grade-04.dgn		DRAWN - AS	REVISED -
	PLOT SCALE = 40.0000 ' / in.	CHECKED -	REVISED -
	PLOT DATE = 1/31/2014	DATE -	REVISED -

STATE OF ILLINOIS
DEPARTMENT OF TRANSPORTATION

INTERSECTION GRADING PLANS
NORTH FRONTAGE ROAD AT MAIN STREET NORTH

SCALE: 1"=50' | SHEET NO. 4 OF 5 SHEETS | STA. | TO STA.

F.A.P. RTE.	SECTION	COUNTY	TOTAL SHEETS	SHEET NO.
331	(1-3)R-2, N-4, TS-4, HBK-1	WILLIAMSON	733	310
DRAWING NO.	GP-04	CONTRACT NO. 78221		
		ILLINOIS FED. AID PROJECT		

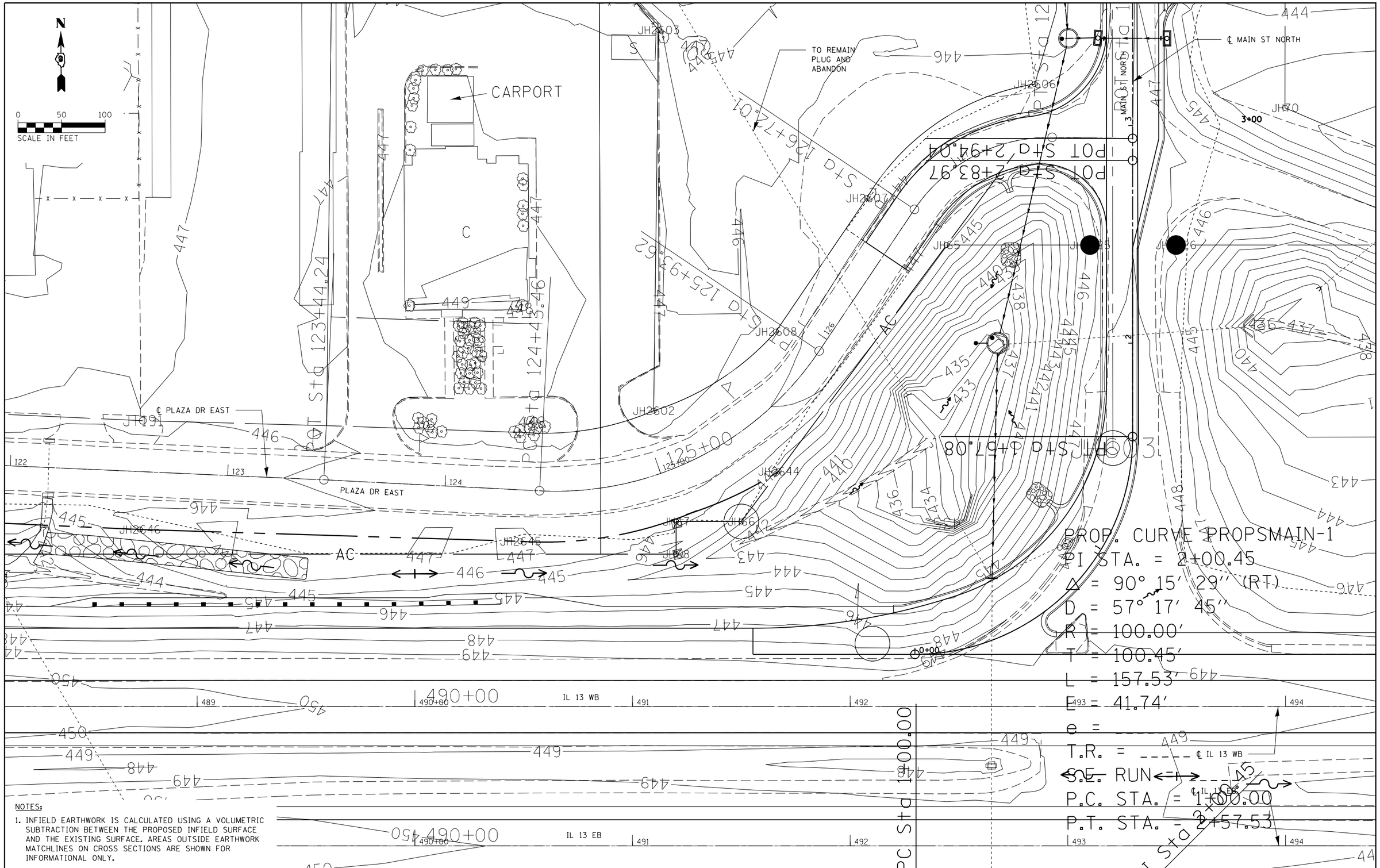

FILE NAME = c:\pw_work\pwidot\lavenderba\d0363618\D478221-sht-grade-05.dgn	USER NAME = $USER$	DESIGNED - KN	REVISED -
		DRAWN - AS	REVISED -
	PLOT SCALE = 40.0000 ' / in.	CHECKED -	REVISED -
	PLOT DATE = 1/31/2014	DATE -	REVISED -

STATE OF ILLINOIS
DEPARTMENT OF TRANSPORTATION

INTERSECTION GRADING PLANS
NORTH FRONTAGE ROAD AT MAIN STREET NORTH

SCALE: 1"=50' | SHEET NO. 5 OF 5 SHEETS | STA. | TO STA.

F.A.P. RTE.	SECTION	COUNTY	TOTAL SHEETS	SHEET NO.
331	(1-3)R-2, N-4, TS-4, HBK-1	WILLIAMSON	733	311
DRAWING NO.	GP-05	CONTRACT NO. 78221		
		ILLINOIS FED. AID PROJECT		

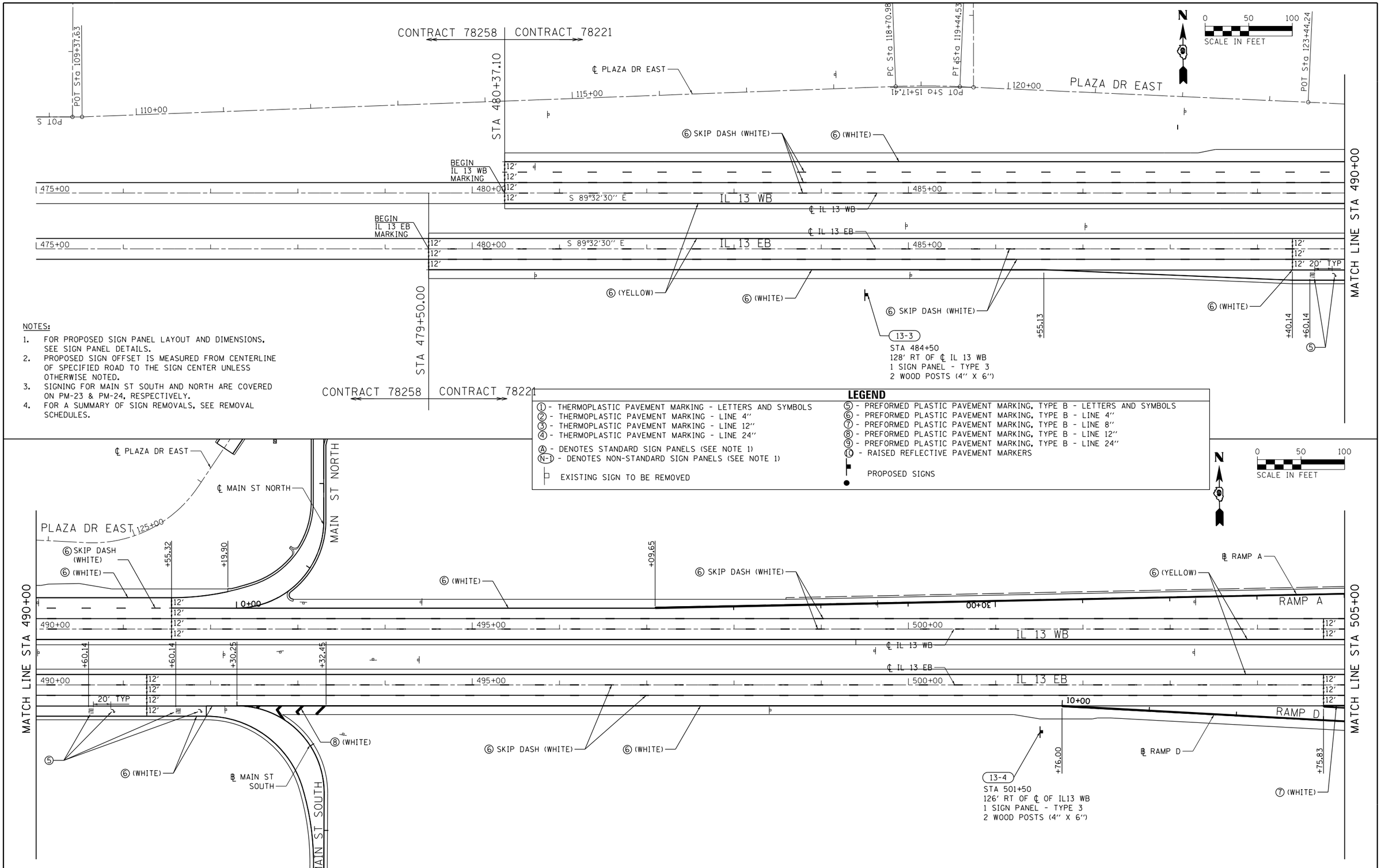

NOTES:

1. FOR PROPOSED SIGN PANEL LAYOUT AND DIMENSIONS, SEE SIGN PANEL DETAILS.
2. PROPOSED SIGN OFFSET IS MEASURED FROM CENTERLINE OF SPECIFIED ROAD TO THE SIGN CENTER UNLESS OTHERWISE NOTED.
3. SIGNING FOR MAIN ST SOUTH AND NORTH ARE COVERED ON PM-23 & PM-24, RESPECTIVELY.
4. FOR A SUMMARY OF SIGN REMOVALS, SEE REMOVAL SCHEDULES.

LEGEND

① - THERMOPLASTIC PAVEMENT MARKING - LETTERS AND SYMBOLS
② - THERMOPLASTIC PAVEMENT MARKING - LINE 4"
③ - THERMOPLASTIC PAVEMENT MARKING - LINE 12"
④ - THERMOPLASTIC PAVEMENT MARKING - LINE 24"
Ⓐ - DENOTES STANDARD SIGN PANELS (SEE NOTE 1)
(N-1) - DENOTES NON-STANDARD SIGN PANELS (SEE NOTE 1)
EXISTING SIGN TO BE REMOVED

⑤ - PREFORMED PLASTIC PAVEMENT MARKING, TYPE B - LETTERS AND SYMBOLS
⑥ - PREFORMED PLASTIC PAVEMENT MARKING, TYPE B - LINE 4"
⑦ - PREFORMED PLASTIC PAVEMENT MARKING, TYPE B - LINE 8"
⑧ - PREFORMED PLASTIC PAVEMENT MARKING, TYPE B - LINE 12"
⑨ - PREFORMED PLASTIC PAVEMENT MARKING, TYPE B - LINE 24"
⑩ - RAISED REFLECTIVE PAVEMENT MARKERS
PROPOSED SIGNS

FILE NAME = c:\pw_work\pwidot\lavenderba\d0363618\D78221-sht-pmk-01.dgn	USER NAME = $USER$	DESIGNED - KN	REVISED -
		DRAWN - AS	REVISED -
	PLOT SCALE = 100.0000 ' / in.	CHECKED -	REVISED -
	PLOT DATE = 1/31/2014	DATE -	REVISED -

STATE OF ILLINOIS
DEPARTMENT OF TRANSPORTATION

PAVEMENT MARKING AND SIGNING PLANS
IL 13

SCALE: | SHEET NO. 1 OF 28 SHEETS | STA. 479+50 TO STA. 505+00

F.A.P. RTE.	SECTION	COUNTY	TOTAL SHEETS	SHEET NO.
331	(1-3)R-2, N-4, TS-4, HBK-1	WILLIAMSON	733	312
DRAWING NO. PM-01		CONTRACT NO. 78221		
		ILLINOIS FED. AID PROJECT		

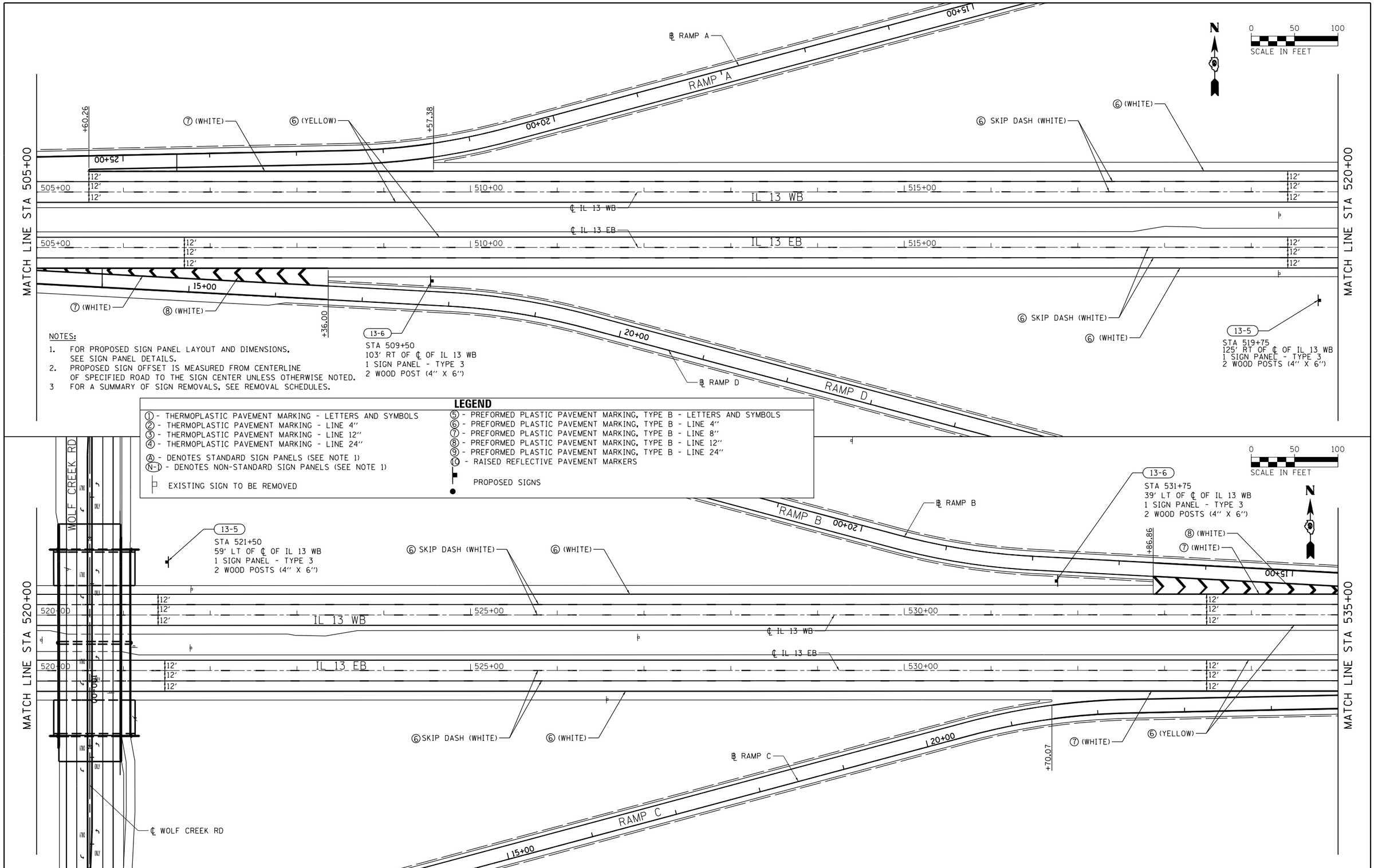

NOTES:

1. FOR PROPOSED SIGN PANEL LAYOUT AND DIMENSIONS, SEE SIGN PANEL DETAILS.
2. PROPOSED SIGN OFFSET IS MEASURED FROM CENTERLINE OF SPECIFIED ROAD TO THE SIGN CENTER UNLESS OTHERWISE NOTED.
3. FOR A SUMMARY OF SIGN REMOVALS, SEE REMOVAL SCHEDULES.

LEGEND

① - THERMOPLASTIC PAVEMENT MARKING - LETTERS AND SYMBOLS
② - THERMOPLASTIC PAVEMENT MARKING - LINE 4"
③ - THERMOPLASTIC PAVEMENT MARKING - LINE 12"
④ - THERMOPLASTIC PAVEMENT MARKING - LINE 24"
Ⓐ - DENOTES STANDARD SIGN PANELS (SEE NOTE 1)
(N-1) - DENOTES NON-STANDARD SIGN PANELS (SEE NOTE 1)
EXISTING SIGN TO BE REMOVED

⑤ - PREFORMED PLASTIC PAVEMENT MARKING, TYPE B - LETTERS AND SYMBOLS
⑥ - PREFORMED PLASTIC PAVEMENT MARKING, TYPE B - LINE 4"
⑦ - PREFORMED PLASTIC PAVEMENT MARKING, TYPE B - LINE 8"
⑧ - PREFORMED PLASTIC PAVEMENT MARKING, TYPE B - LINE 12"
⑨ - PREFORMED PLASTIC PAVEMENT MARKING, TYPE B - LINE 24"
⑩ - RAISED REFLECTIVE PAVEMENT MARKERS
PROPOSED SIGNS

FILE NAME = c:\pw_work\pwidot\lavenderba\d0363618\D978221-sht-pmk-02.dgn	USER NAME = $USER$	DESIGNED - KN	REVISED -
		DRAWN - AS	REVISED -
	PLOT SCALE = 100.0000 ' / in.	CHECKED -	REVISED -
	PLOT DATE = 1/31/2014	DATE -	REVISED -

STATE OF ILLINOIS
DEPARTMENT OF TRANSPORTATION

PAVEMENT MARKING AND SIGNING PLANS
IL 13

SCALE: | SHEET NO. 2 OF 28 SHEETS | STA. 505+00 TO STA. 535+00

F.A.P. RTE.	SECTION	COUNTY	TOTAL SHEETS	SHEET NO.
331	(1-3)R-2, N-4, TS-4, HBK-1	WILLIAMSON	733	313
DRAWING NO.	PM-02	CONTRACT NO. 78221		
		ILLINOIS FED. AID PROJECT		

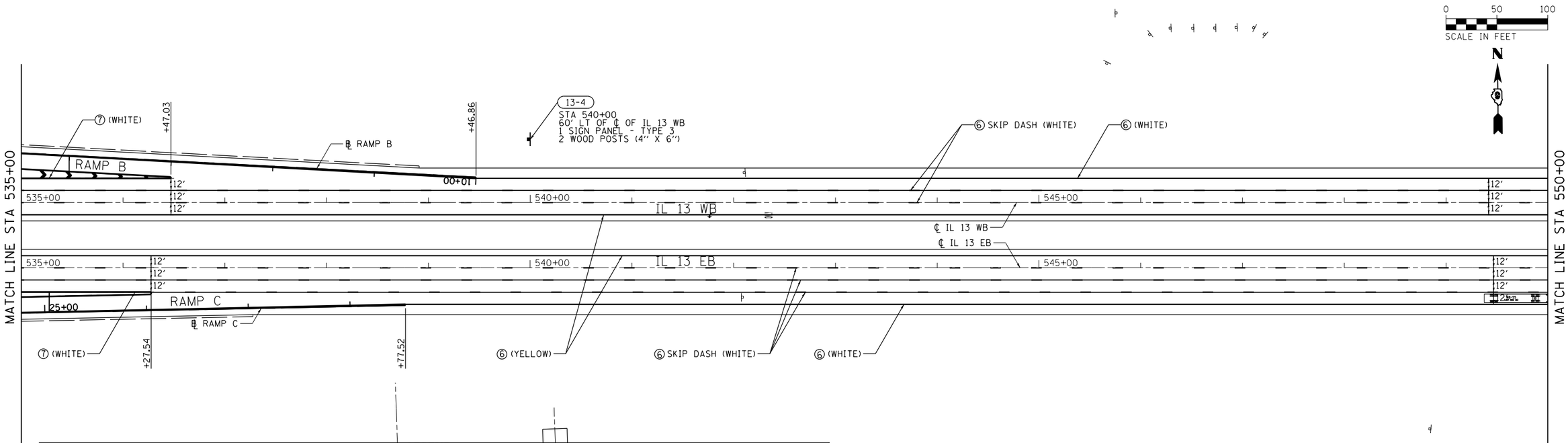

LEGEND

① - THERMOPLASTIC PAVEMENT MARKING - LETTERS AND SYMBOLS	⑤ - PREFORMED PLASTIC PAVEMENT MARKING, TYPE B - LETTERS AND SYMBOLS
② - THERMOPLASTIC PAVEMENT MARKING - LINE 4"	⑥ - PREFORMED PLASTIC PAVEMENT MARKING, TYPE B - LINE 4"
③ - THERMOPLASTIC PAVEMENT MARKING - LINE 12"	⑦ - PREFORMED PLASTIC PAVEMENT MARKING, TYPE B - LINE 8"
④ - THERMOPLASTIC PAVEMENT MARKING - LINE 24"	⑧ - PREFORMED PLASTIC PAVEMENT MARKING, TYPE B - LINE 12"
Ⓐ - DENOTES STANDARD SIGN PANELS (SEE NOTE 1)	⑨ - PREFORMED PLASTIC PAVEMENT MARKING, TYPE B - LINE 24"
(N-1) - DENOTES NON-STANDARD SIGN PANELS (SEE NOTE 1)	⑩ - RAISED REFLECTIVE PAVEMENT MARKERS
EXISTING SIGN TO BE REMOVED	PROPOSED SIGNS

NOTES:

1. FOR PROPOSED SIGN PANEL LAYOUT AND DIMENSIONS, SEE SIGN PANEL DETAILS.
2. PROPOSED SIGN OFFSET IS MEASURED FROM CENTERLINE OF SPECIFIED ROAD TO THE SIGN CENTER UNLESS OTHERWISE NOTED.
3 FOR A SUMMARY OF SIGN REMOVALS, SEE REMOVAL SCHEDULES.

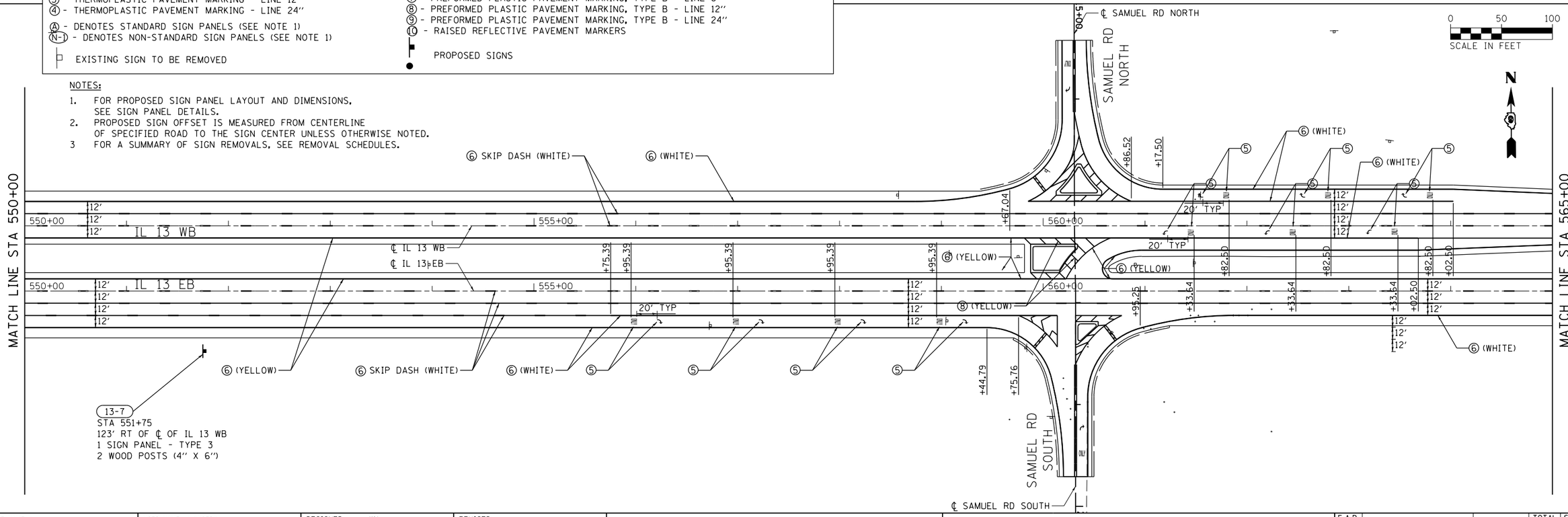

FILE NAME = c:\pw_work\pwidot\lavenderba\d0363618\D178221-sht-pmk-03.dgn	USER NAME = $USER$	DESIGNED - KN	REVISED -
	PLOT SCALE = 100.0000 ' / in.	DRAWN - AS	REVISED -
	PLOT DATE = 1/31/2014	CHECKED -	REVISED -
		DATE -	REVISED -

STATE OF ILLINOIS
DEPARTMENT OF TRANSPORTATION

PAVEMENT MARKING AND SIGNING PLANS
IL 13

SCALE: | SHEET NO. 3 OF 28 SHEETS | STA. 535+00 TO STA. 565+00

F.A.P. RTE.	SECTION	COUNTY	TOTAL SHEETS	SHEET NO.
331	(1-3)R-2, N-4, TS-4, HBK-1	WILLIAMSON	733	314
DRAWING NO.	PM-03	CONTRACT NO. 78221		
		ILLINOIS FED. AID PROJECT		

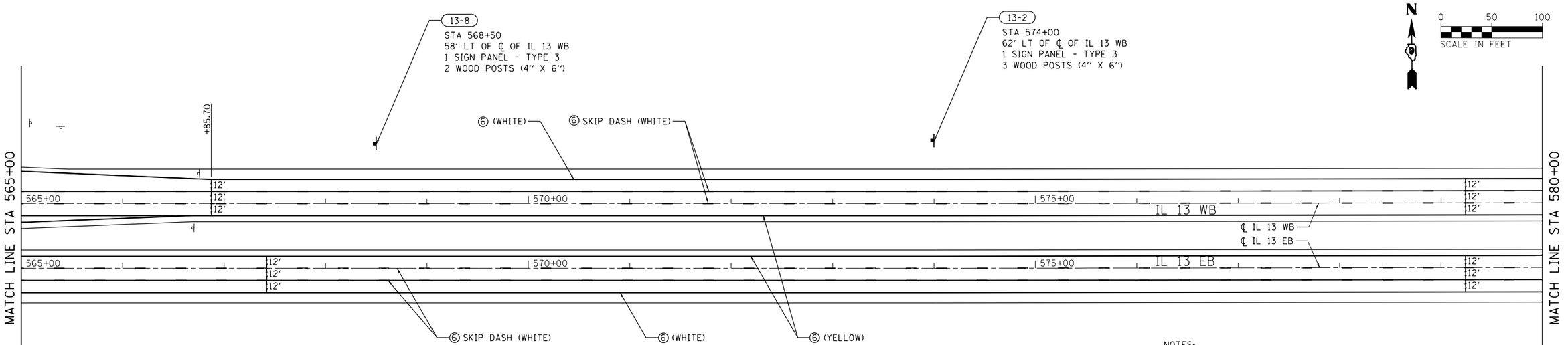

NOTES:

1. FOR PROPOSED SIGN PANEL LAYOUT AND DIMENSIONS, SEE SIGN PANEL DETAILS.
2. PROPOSED SIGN OFFSET IS MEASURED FROM CENTERLINE OF SPECIFIED ROAD TO THE SIGN CENTER UNLESS OTHERWISE NOTED.
3 FOR A SUMMARY OF SIGN REMOVALS, SEE REMOVAL SCHEDULES.

LEGEND

① - THERMOPLASTIC PAVEMENT MARKING - LETTERS AND SYMBOLS
② - THERMOPLASTIC PAVEMENT MARKING - LINE 4"
③ - THERMOPLASTIC PAVEMENT MARKING - LINE 12"
④ - THERMOPLASTIC PAVEMENT MARKING - LINE 24"

Ⓐ - DENOTES STANDARD SIGN PANELS (SEE NOTE 1)
(N-1) - DENOTES NON-STANDARD SIGN PANELS (SEE NOTE 1)

EXISTING SIGN TO BE REMOVED

⑤ - PREFORMED PLASTIC PAVEMENT MARKING, TYPE B - LETTERS AND SYMBOLS
⑥ - PREFORMED PLASTIC PAVEMENT MARKING, TYPE B - LINE 4"
⑦ - PREFORMED PLASTIC PAVEMENT MARKING, TYPE B - LINE 8"
⑧ - PREFORMED PLASTIC PAVEMENT MARKING, TYPE B - LINE 12"
⑨ - PREFORMED PLASTIC PAVEMENT MARKING, TYPE B - LINE 24"
⑩ - RAISED REFLECTIVE PAVEMENT MARKERS

PROPOSED SIGNS

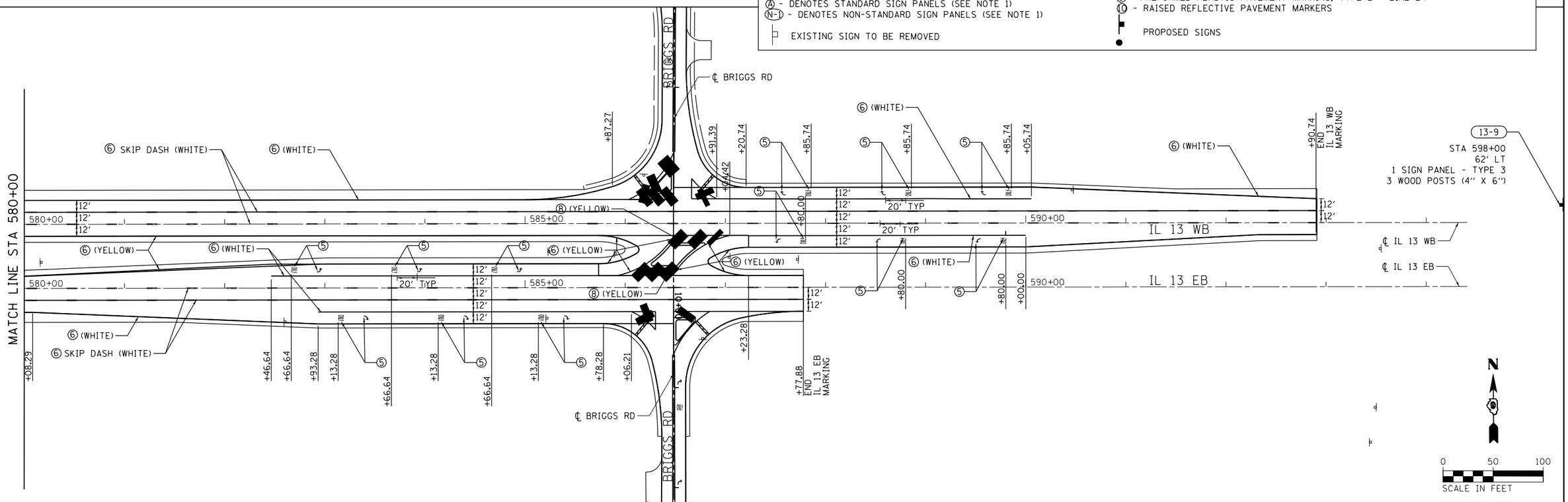

FILE NAME = c:\pw_work\pwidot\lavenderba\d0363618\D78221-sht-pmk-04.dgn	USER NAME = $USER$	DESIGNED - KN	REVISED -
		DRAWN - AS	REVISED -
	PLOT SCALE = 100.0000 ' / in.	CHECKED -	REVISED -
	PLOT DATE = 1/31/2014	DATE -	REVISED -

STATE OF ILLINOIS
DEPARTMENT OF TRANSPORTATION

PAVEMENT MARKING AND SIGNING PLANS
IL 13

SCALE: | SHEET NO. 4 OF 28 SHEETS | STA. 565+00 TO STA. 595+00

F.A.P. RTE.	SECTION	COUNTY	TOTAL SHEETS	SHEET NO.
331	(1-3)R-2, N-4, TS-4, HBK-1	WILLIAMSON	733	315
DRAWING NO. PM-04		CONTRACT NO. 78221		
		ILLINOIS FED. AID PROJECT		

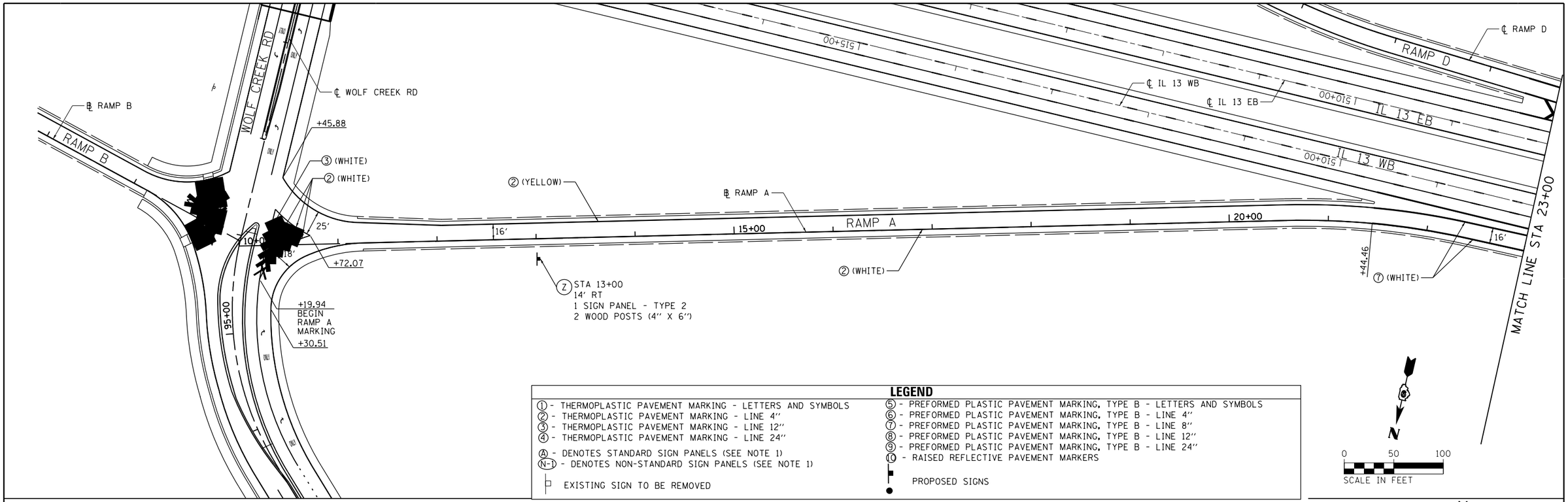

LEGEND

① - THERMOPLASTIC PAVEMENT MARKING - LETTERS AND SYMBOLS
② - THERMOPLASTIC PAVEMENT MARKING - LINE 4"
③ - THERMOPLASTIC PAVEMENT MARKING - LINE 12"
④ - THERMOPLASTIC PAVEMENT MARKING - LINE 24"

Ⓐ - DENOTES STANDARD SIGN PANELS (SEE NOTE 1)
(N-1) - DENOTES NON-STANDARD SIGN PANELS (SEE NOTE 1)

EXISTING SIGN TO BE REMOVED

⑤ - PREFORMED PLASTIC PAVEMENT MARKING, TYPE B - LETTERS AND SYMBOLS
⑥ - PREFORMED PLASTIC PAVEMENT MARKING, TYPE B - LINE 4"
⑦ - PREFORMED PLASTIC PAVEMENT MARKING, TYPE B - LINE 8"
⑧ - PREFORMED PLASTIC PAVEMENT MARKING, TYPE B - LINE 12"
⑨ - PREFORMED PLASTIC PAVEMENT MARKING, TYPE B - LINE 24"
⑩ - RAISED REFLECTIVE PAVEMENT MARKERS

PROPOSED SIGNS

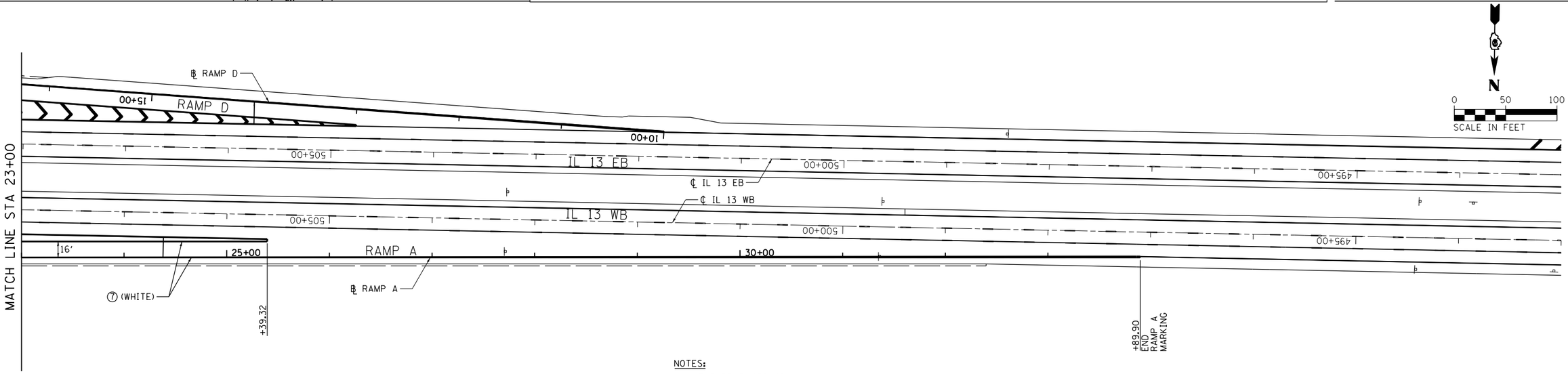

NOTES:

1. FOR PROPOSED SIGN PANEL LAYOUT AND DIMENSIONS, SEE SIGN PANEL DETAILS.
2. PROPOSED SIGN OFFSET IS MEASURED FROM CENTERLINE OF SPECIFIED ROAD TO THE SIGN CENTER UNLESS OTHERWISE NOTED.
3. WOLF CREEK RD AND RAMP B SIGNING IS COVERED ON PM-10 (TOP).
4. RAMP D, RAMP A AND IL-13 SIGNING IS COVERD ON PM-02 (TOP).
5. FOR A SUMMARY OF SIGN REMOVALS, SEE REMOVAL SCHEDULES.

FILE NAME = c:\pw_work\pwidot\lavenderba\d0363618\D978221-sht-pmk-05.dgn	USER NAME = $USER$	DESIGNED - KN	REVISED -
		DRAWN - AS	REVISED -
	PLOT SCALE = 100.0000 ' / in.	CHECKED -	REVISED -
	PLOT DATE = 1/31/2014	DATE -	REVISED -

STATE OF ILLINOIS
DEPARTMENT OF TRANSPORTATION

PAVEMENT MARKING AND SIGNING PLANS
RAMP A

SCALE: | SHEET NO. 5 OF 28 SHEETS | STA. 10+00 TO STA. 33+89.90

F.A.P. RTE.	SECTION	COUNTY	TOTAL SHEETS	SHEET NO.
331	(1-3)R-2, N-4, TS-4, HBK-1	WILLIAMSON	733	316
DRAWING NO.	PM-05	CONTRACT NO. 78221		
		ILLINOIS FED. AID PROJECT		

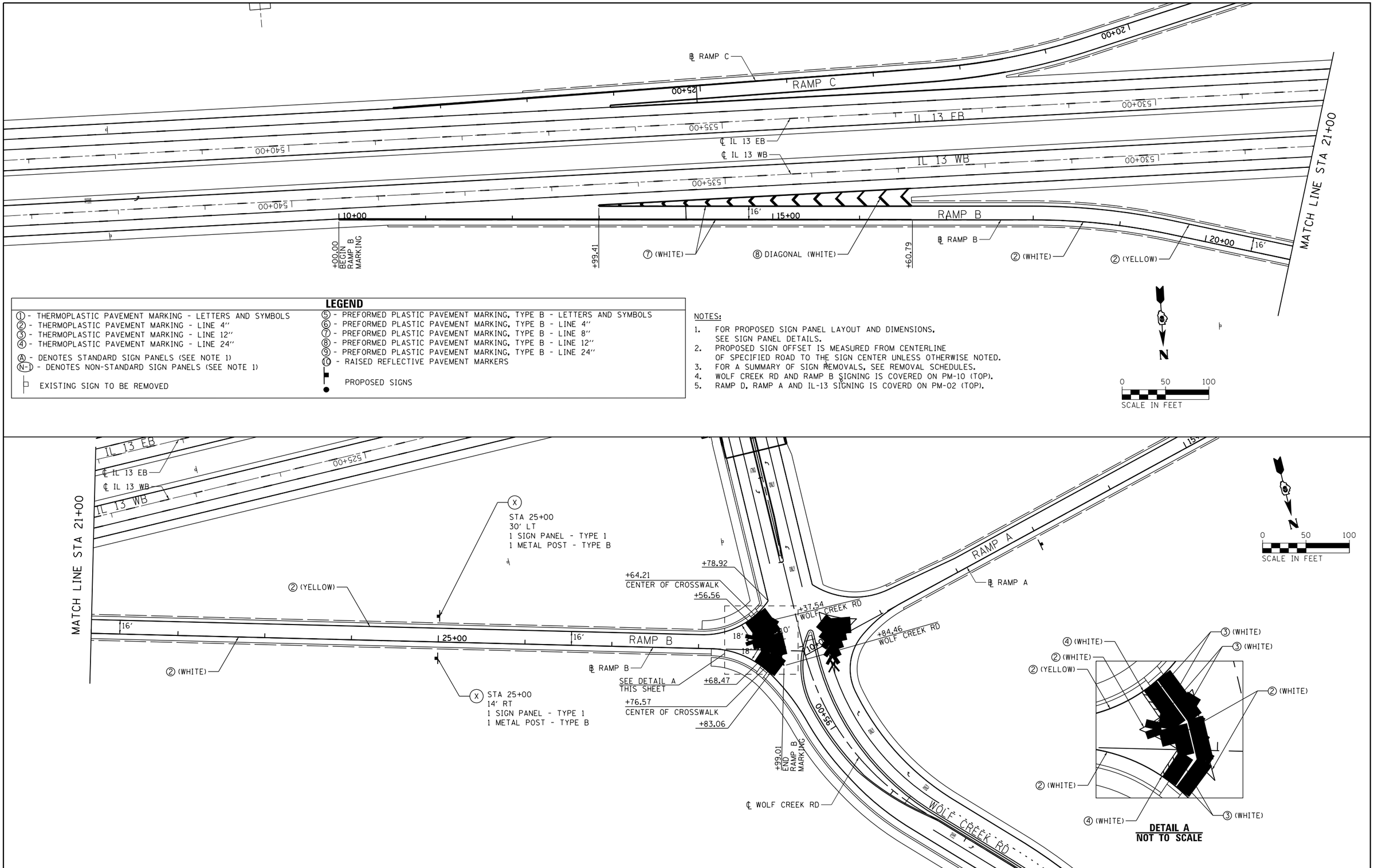

LEGEND

① - THERMOPLASTIC PAVEMENT MARKING - LETTERS AND SYMBOLS
② - THERMOPLASTIC PAVEMENT MARKING - LINE 4"
③ - THERMOPLASTIC PAVEMENT MARKING - LINE 12"
④ - THERMOPLASTIC PAVEMENT MARKING - LINE 24"

Ⓐ - DENOTES STANDARD SIGN PANELS (SEE NOTE 1)
(N-1) - DENOTES NON-STANDARD SIGN PANELS (SEE NOTE 1)

EXISTING SIGN TO BE REMOVED

⑤ - PREFORMED PLASTIC PAVEMENT MARKING, TYPE B - LETTERS AND SYMBOLS
⑥ - PREFORMED PLASTIC PAVEMENT MARKING, TYPE B - LINE 4"
⑦ - PREFORMED PLASTIC PAVEMENT MARKING, TYPE B - LINE 8"
⑧ - PREFORMED PLASTIC PAVEMENT MARKING, TYPE B - LINE 12"
⑨ - PREFORMED PLASTIC PAVEMENT MARKING, TYPE B - LINE 24"
⑩ - RAISED REFLECTIVE PAVEMENT MARKERS

PROPOSED SIGNS

NOTES:

1. FOR PROPOSED SIGN PANEL LAYOUT AND DIMENSIONS, SEE SIGN PANEL DETAILS.
2. PROPOSED SIGN OFFSET IS MEASURED FROM CENTERLINE OF SPECIFIED ROAD TO THE SIGN CENTER UNLESS OTHERWISE NOTED.
3. FOR A SUMMARY OF SIGN REMOVALS, SEE REMOVAL SCHEDULES.
4. WOLF CREEK RD AND RAMP B SIGNING IS COVERED ON PM-10 (TOP).
5. RAMP D, RAMP A AND IL-13 SIGNING IS COVERD ON PM-02 (TOP).

FILE NAME = c:\pw_work\pwidot\lavenderba\d0363618\D178221-sht-pmk-06.dgn	USER NAME = $USER$	DESIGNED - KN	REVISED -
	PLOT SCALE = 100.0000 ' / in.	DRAWN - AS	REVISED -
	PLOT DATE = 1/31/2014	CHECKED -	REVISED -
		DATE -	REVISED -

STATE OF ILLINOIS
DEPARTMENT OF TRANSPORTATION

PAVEMENT MARKING AND SIGNING PLANS
RAMP B

SCALE: | SHEET NO. 6 OF 28 SHEETS | STA. 10+00 TO STA. 29+21.90

F.A.P. RTE.	SECTION	COUNTY	TOTAL SHEETS	SHEET NO.
331	(1-3)R-2, N-4, TS-4, HBK-1	WILLIAMSON	733	317
DRAWING NO.	PM-06	CONTRACT NO. 78221		
		ILLINOIS FED. AID PROJECT		

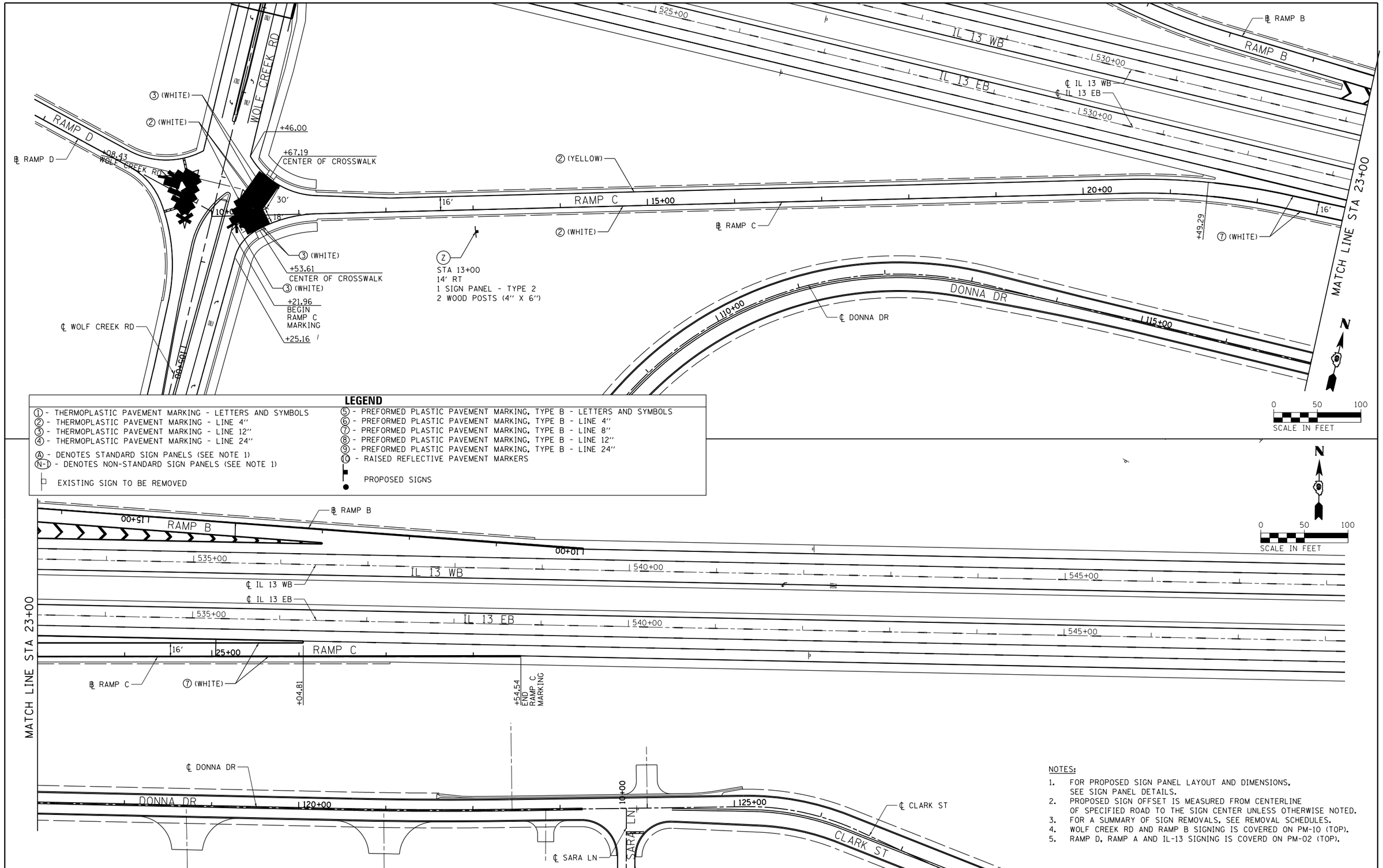

LEGEND

① - THERMOPLASTIC PAVEMENT MARKING - LETTERS AND SYMBOLS
② - THERMOPLASTIC PAVEMENT MARKING - LINE 4''
③ - THERMOPLASTIC PAVEMENT MARKING - LINE 12''
④ - THERMOPLASTIC PAVEMENT MARKING - LINE 24''

Ⓐ - DENOTES STANDARD SIGN PANELS (SEE NOTE 1)
(N-1) - DENOTES NON-STANDARD SIGN PANELS (SEE NOTE 1)

EXISTING SIGN TO BE REMOVED

⑤ - PREFORMED PLASTIC PAVEMENT MARKING, TYPE B - LETTERS AND SYMBOLS
⑥ - PREFORMED PLASTIC PAVEMENT MARKING, TYPE B - LINE 4''
⑦ - PREFORMED PLASTIC PAVEMENT MARKING, TYPE B - LINE 8''
⑧ - PREFORMED PLASTIC PAVEMENT MARKING, TYPE B - LINE 12''
⑨ - PREFORMED PLASTIC PAVEMENT MARKING, TYPE B - LINE 24''
⑩ - RAISED REFLECTIVE PAVEMENT MARKERS

PROPOSED SIGNS

NOTES:

1. FOR PROPOSED SIGN PANEL LAYOUT AND DIMENSIONS, SEE SIGN PANEL DETAILS.
2. PROPOSED SIGN OFFSET IS MEASURED FROM CENTERLINE OF SPECIFIED ROAD TO THE SIGN CENTER UNLESS OTHERWISE NOTED.
3. FOR A SUMMARY OF SIGN REMOVALS, SEE REMOVAL SCHEDULES.
4. WOLF CREEK RD AND RAMP B SIGNING IS COVERED ON PM-10 (TOP).
5. RAMP D, RAMP A AND IL-13 SIGNING IS COVERD ON PM-02 (TOP).

FILE NAME = c:\pw_work\pwidot\lavenderba\d0363618\D978221-sht-pmk-07.dgn	USER NAME = $USER$	DESIGNED - KN	REVISED -
		DRAWN - AS	REVISED -
	PLOT SCALE = 100.2244 ' / in.	CHECKED -	REVISED -
	PLOT DATE = 1/31/2014	DATE -	REVISED -

STATE OF ILLINOIS
DEPARTMENT OF TRANSPORTATION

PAVEMENT MARKING AND SIGNING PLANS
RAMP C

SCALE: | SHEET NO. 7 OF 28 SHEETS | STA. 10+00 TO STA. 28+54.54

F.A.P. RTE.	SECTION	COUNTY	TOTAL SHEETS	SHEET NO.
331	(1-3)R-2, N-4, TS-4, HBK-1	WILLIAMSON	733	318
DRAWING NO. PM-07		CONTRACT NO. 78221		
		ILLINOIS FED. AID PROJECT		

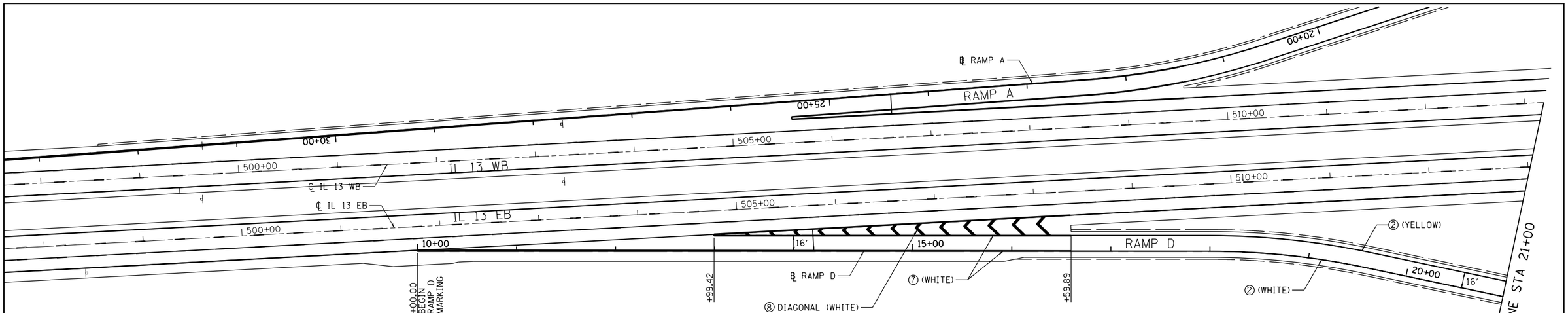

LEGEND

① - THERMOPLASTIC PAVEMENT MARKING - LETTERS AND SYMBOLS
② - THERMOPLASTIC PAVEMENT MARKING - LINE 4"
③ - THERMOPLASTIC PAVEMENT MARKING - LINE 12"
④ - THERMOPLASTIC PAVEMENT MARKING - LINE 24"
Ⓐ - DENOTES STANDARD SIGN PANELS (SEE NOTE 1)
(N-1) - DENOTES NON-STANDARD SIGN PANELS (SEE NOTE 1)
EXISTING SIGN TO BE REMOVED

⑤ - PREFORMED PLASTIC PAVEMENT MARKING, TYPE B - LETTERS AND SYMBOLS
⑥ - PREFORMED PLASTIC PAVEMENT MARKING, TYPE B - LINE 4"
⑦ - PREFORMED PLASTIC PAVEMENT MARKING, TYPE B - LINE 8"
⑧ - PREFORMED PLASTIC PAVEMENT MARKING, TYPE B - LINE 12"
⑨ - PREFORMED PLASTIC PAVEMENT MARKING, TYPE B - LINE 24"
⑩ - RAISED REFLECTIVE PAVEMENT MARKERS
PROPOSED SIGNS

NOTES:

1. FOR PROPOSED SIGN PANEL LAYOUT AND DIMENSIONS, SEE SIGN PANEL DETAILS.
2. PROPOSED SIGN OFFSET IS MEASURED FROM CENTERLINE OF SPECIFIED ROAD TO THE SIGN CENTER UNLESS OTHERWISE NOTED.
3. FOR A SUMMARY OF SIGN REMOVALS, SEE REMOVAL SCHEDULES.
4. RAMP A, RAMP D AND IL 13 SIGNING IS COVERED ON PM-02 (TOP).
5. WOLF CREEK RD SIGNING, INCLUDING RAMPS C AND D INTERSECTION, IS COVERED ON PM-10 (BOTTOM).
6. DONNA DRIVE SIGNING IS COVERD ON PM-22 (TOP).

N

0 50 100
SCALE IN FEET

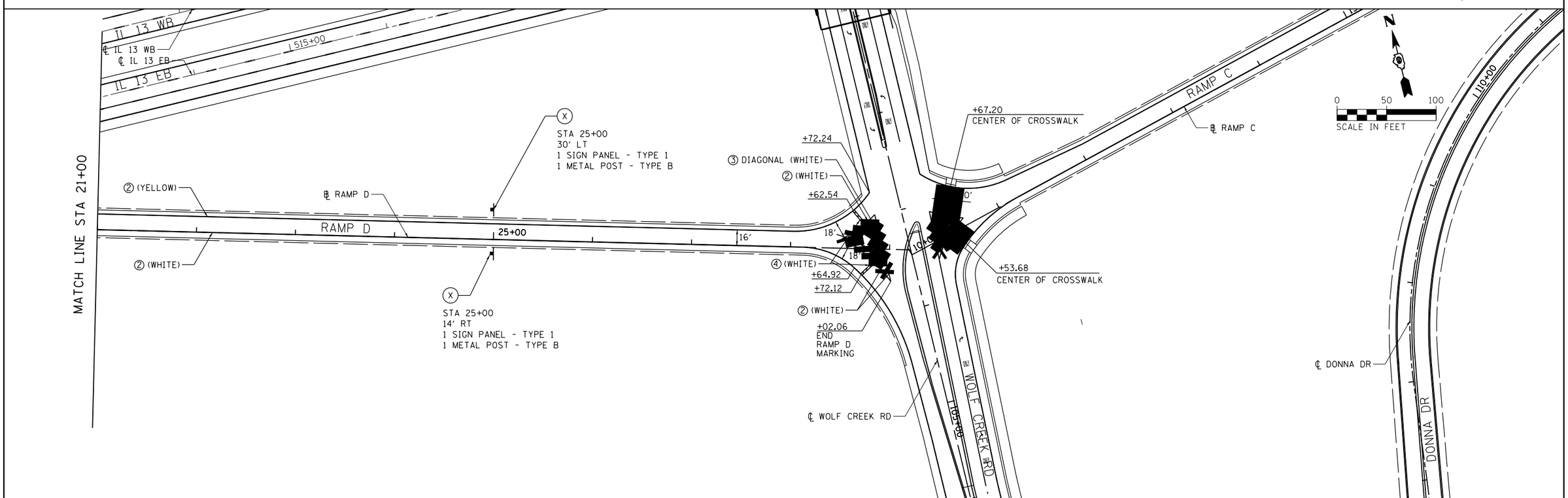

FILE NAME = c:\pw_work\pwidot\lavenderba\d0363618\D78221-sht-pmk-08.dgn	USER NAME = $USER$	DESIGNED - KN	REVISED -
	PLOT SCALE = 100.0000 ' / in.	DRAWN - AS	REVISED -
	PLOT DATE = 1/31/2014	CHECKED -	REVISED -
		DATE -	REVISED -

STATE OF ILLINOIS
DEPARTMENT OF TRANSPORTATION

PAVEMENT MARKING AND SIGNING PLANS
RAMP D

SCALE: | SHEET NO. 8 OF 28 SHEETS | STA. 10+00 TO STA. 29+21.40

F.A.P. RTE.	SECTION	COUNTY	TOTAL SHEETS	SHEET NO.
331	(1-3)R-2, N-4, TS-4, HBK-1	WILLIAMSON	733	319
DRAWING NO.	PM-08	CONTRACT NO. 78221		
		ILLINOIS FED. AID PROJECT		

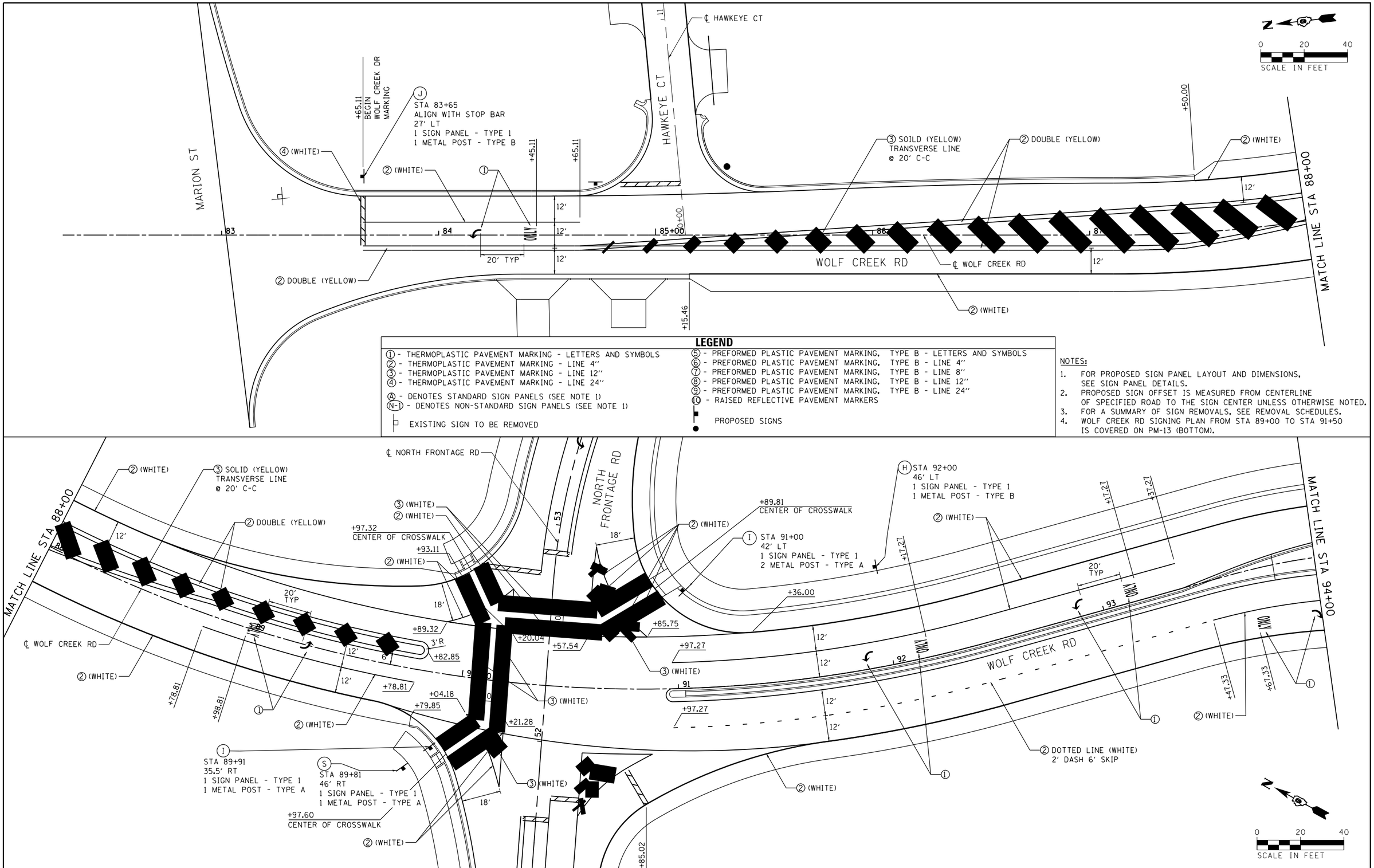

FILE NAME = c:\pw_work\pwidot\lavenderba\d0363618\D178221-sht-pmk-09.dgn	USER NAME = $USER$	DESIGNED - KN	REVISED -
		DRAWN - AS	REVISED -
	PLOT SCALE = 40.0000 ' / in.	CHECKED -	REVISED -
	PLOT DATE = 1/31/2014	DATE -	REVISED -

STATE OF ILLINOIS
DEPARTMENT OF TRANSPORTATION

PAVEMENT MARKING AND SIGNING PLANS
WOLF CREEK ROAD

SCALE: | SHEET NO. 9 OF 28 SHEETS | STA. 88+27.92 TO STA. 94+30

F.A.P. RTE.	SECTION	COUNTY	TOTAL SHEETS	SHEET NO.
331	(1-3)R-2, N-4, TS-4, HBK-1	WILLIAMSON	733	320
DRAWING NO. PM-09		CONTRACT NO. 78221		
		ILLINOIS FED. AID PROJECT		

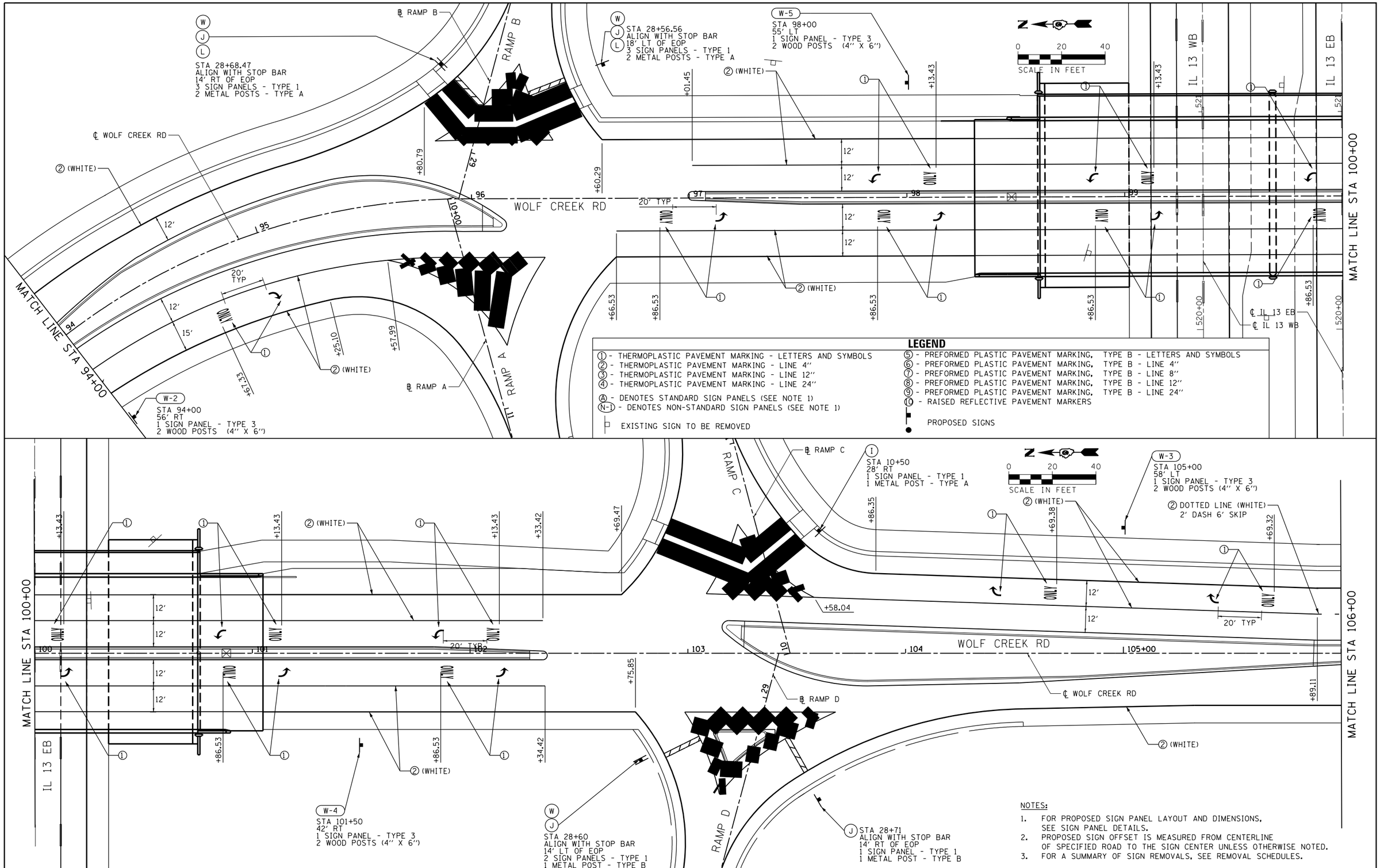

NOTES:

1. FOR PROPOSED SIGN PANEL LAYOUT AND DIMENSIONS, SEE SIGN PANEL DETAILS.
2. PROPOSED SIGN OFFSET IS MEASURED FROM CENTERLINE OF SPECIFIED ROAD TO THE SIGN CENTER UNLESS OTHERWISE NOTED.
3. FOR A SUMMARY OF SIGN REMOVALS, SEE REMOVAL SCHEDULES.

FILE NAME = c:\pw_work\pwidot\lavenderba\d0363618\D978221-sht-pmk-10.dgn	USER NAME = $USER$	DESIGNED - KN	REVISED -
		DRAWN - AS	REVISED -
	PLOT SCALE = 40.0000 ' / in.	CHECKED -	REVISED -
	PLOT DATE = 1/31/2014	DATE -	REVISED -

STATE OF ILLINOIS
DEPARTMENT OF TRANSPORTATION

PAVEMENT MARKING AND SIGNING PLANS
WOLF CREEK ROAD

SCALE: | SHEET NO. 10 OF 28 SHEETS | STA. 94+00 TO STA. 106+00

F.A.P. RTE.	SECTION	COUNTY	TOTAL SHEETS	SHEET NO.
331	(1-3)R-2, N-4, TS-4, HBK-1	WILLIAMSON	733	321
DRAWING NO.	PM-10	CONTRACT NO. 78221		
		ILLINOIS FED. AID PROJECT		

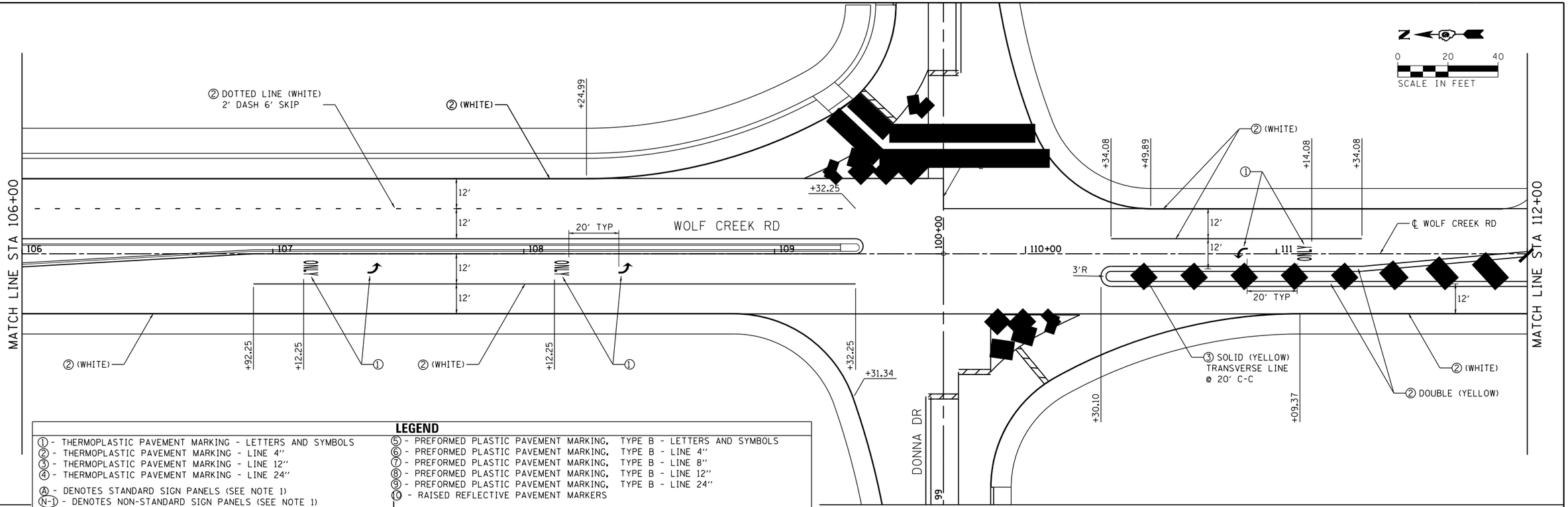

LEGEND

① - THERMOPLASTIC PAVEMENT MARKING - LETTERS AND SYMBOLS	⑤ - PREFORMED PLASTIC PAVEMENT MARKING, TYPE B - LETTERS AND SYMBOLS
② - THERMOPLASTIC PAVEMENT MARKING - LINE 4"	⑥ - PREFORMED PLASTIC PAVEMENT MARKING, TYPE B - LINE 4"
③ - THERMOPLASTIC PAVEMENT MARKING - LINE 12"	⑦ - PREFORMED PLASTIC PAVEMENT MARKING, TYPE B - LINE 8"
④ - THERMOPLASTIC PAVEMENT MARKING - LINE 24"	⑧ - PREFORMED PLASTIC PAVEMENT MARKING, TYPE B - LINE 12"
Ⓐ - DENOTES STANDARD SIGN PANELS (SEE NOTE 1)	⑨ - PREFORMED PLASTIC PAVEMENT MARKING, TYPE B - LINE 24"
(N-1) - DENOTES NON-STANDARD SIGN PANELS (SEE NOTE 1)	⑩ - RAISED REFLECTIVE PAVEMENT MARKERS
EXISTING SIGN TO BE REMOVED	PROPOSED SIGNS

NOTES:

1. FOR PROPOSED SIGN PANEL LAYOUT AND DIMENSIONS, SEE SIGN PANEL DETAILS.
2. PROPOSED SIGN OFFSET IS MEASURED FROM CENTERLINE OF SPECIFIED ROAD TO THE SIGN CENTER UNLESS OTHERWISE NOTED.
3. FOR A SUMMARY OF SIGN REMOVALS, SEE REMOVAL SCHEDULES.
4. WOLF CREEK ROAD SIGNING FROM STA 107+01 TO STA 112+00 IS COVERED ON PM-21 (BOTTOM).

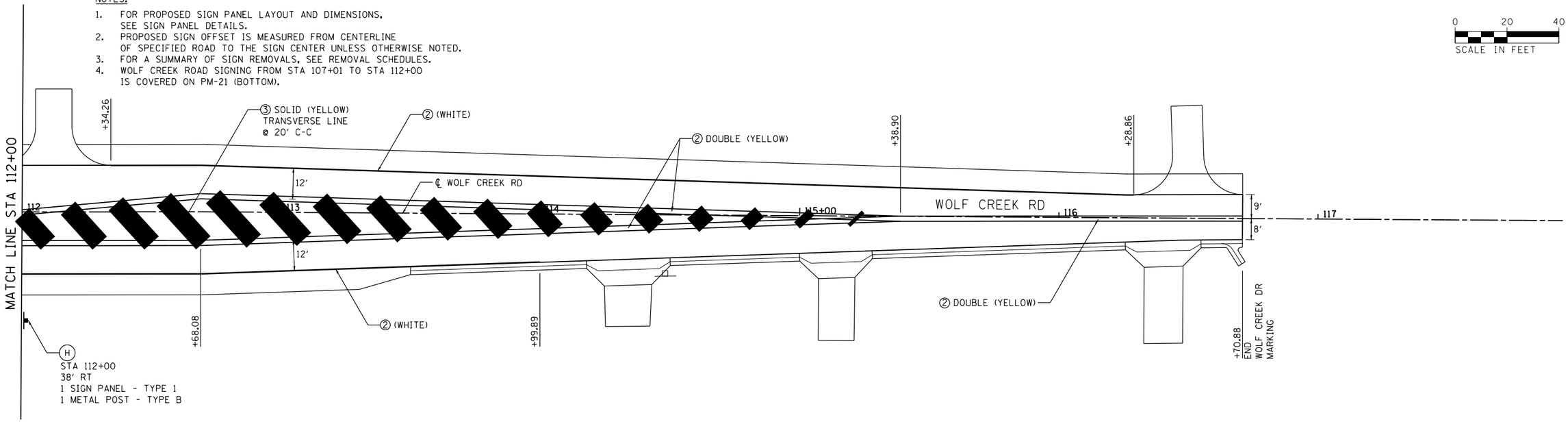

FILE NAME = c:\pw_work\pwidot\lavenderba\d0363618\D978221-sht-pmk-11.dgn	USER NAME = $USER$	DESIGNED - KN	REVISED -
		DRAWN - AS	REVISED -
	PLOT SCALE = 40.0000 ' / in.	CHECKED -	REVISED -
	PLOT DATE = 1/31/2014	DATE -	REVISED -

STATE OF ILLINOIS
DEPARTMENT OF TRANSPORTATION

PAVEMENT MARKING AND SIGNING PLANS
WOLF CREEK ROAD

SCALE: | SHEET NO. 11 OF 28 SHEETS | STA. 106+00 TO STA. 116+70.88

F.A.P. RTE.	SECTION	COUNTY	TOTAL SHEETS	SHEET NO.
331	(1-3)R-2, N-4, TS-4, HBK-1	WILLIAMSON	733	322
DRAWING NO. PM-11		CONTRACT NO. 78221		
		ILLINOIS FED. AID PROJECT		

NOTES:

1. FOR PROPOSED SIGN PANEL LAYOUT AND DIMENSIONS, SEE SIGN PANEL DETAILS.
2. PROPOSED SIGN OFFSET IS MEASURED FROM CENTERLINE OF SPECIFIED ROAD TO THE SIGN CENTER UNLESS OTHERWISE NOTED.
3. FOR A SUMMARY OF SIGN REMOVALS, SEE REMOVAL SCHEDULES.
4. SIGNING PLAN FOR NORTH FRONTAGE ROAD IS COVERED ON PM-15 (TOP).

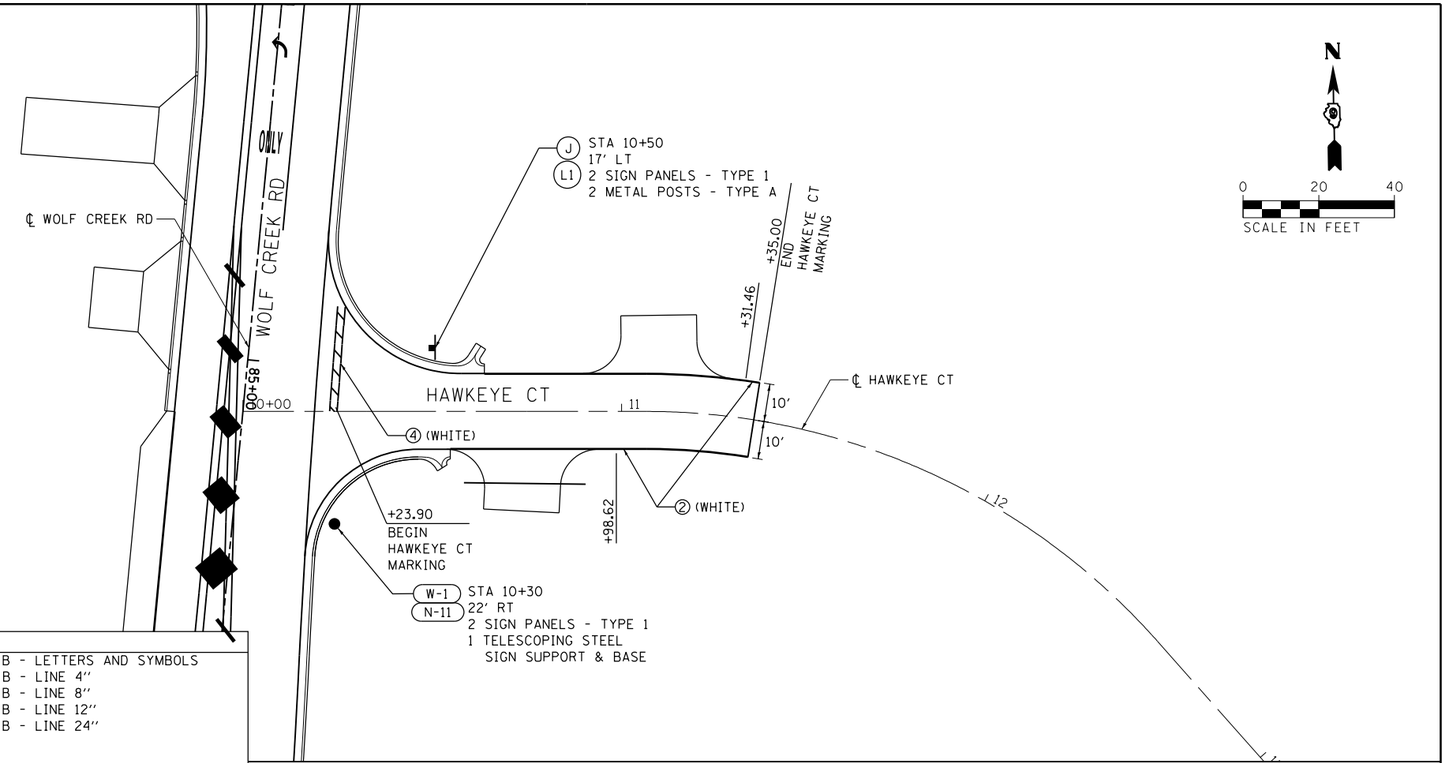

LEGEND

(1) - THERMOPLASTIC PAVEMENT MARKING - LETTERS AND SYMBOLS	(5) - PREFORMED PLASTIC PAVEMENT MARKING, TYPE B - LETTERS AND SYMBOLS
(2) - THERMOPLASTIC PAVEMENT MARKING - LINE 4"	(6) - PREFORMED PLASTIC PAVEMENT MARKING, TYPE B - LINE 4"
(3) - THERMOPLASTIC PAVEMENT MARKING - LINE 12"	(7) - PREFORMED PLASTIC PAVEMENT MARKING, TYPE B - LINE 8"
(4) - THERMOPLASTIC PAVEMENT MARKING - LINE 24"	(8) - PREFORMED PLASTIC PAVEMENT MARKING, TYPE B - LINE 12"
(A) - DENOTES STANDARD SIGN PANELS (SEE NOTE 1)	(9) - PREFORMED PLASTIC PAVEMENT MARKING, TYPE B - LINE 24"
(N-1) - DENOTES NON-STANDARD SIGN PANELS (SEE NOTE 1)	(10) - RAISED REFLECTIVE PAVEMENT MARKERS
EXISTING SIGN TO BE REMOVED	PROPOSED SIGNS

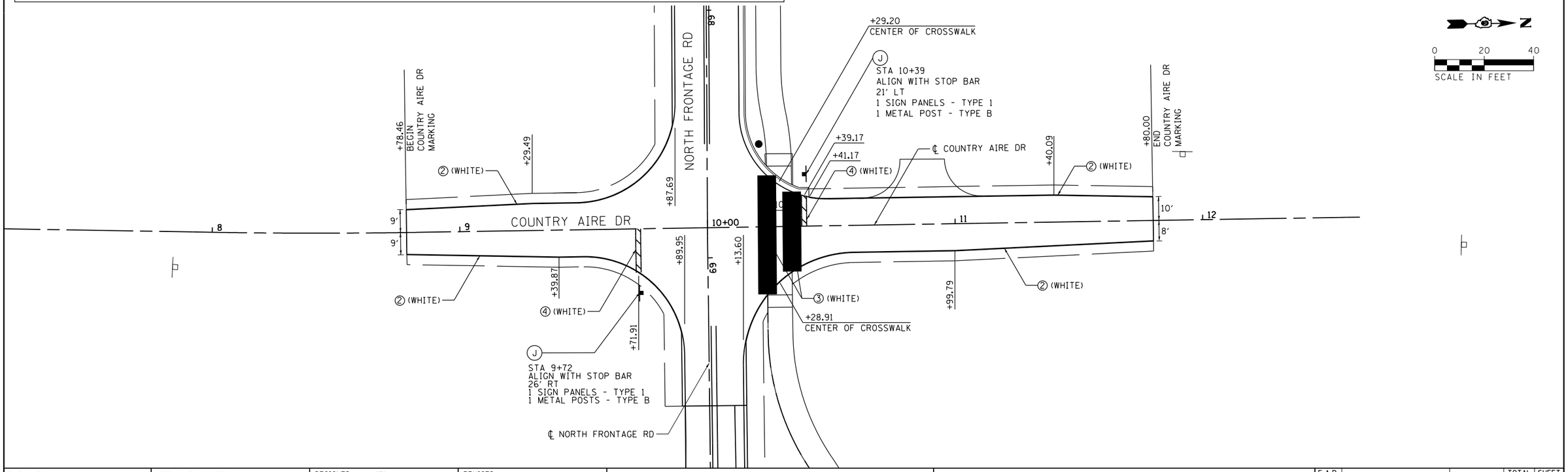

FILE NAME = c:\pw_work\pwidot\lavenderba\d0363618\D78221-sht-pmk-12.dgn	USER NAME = $USER$	DESIGNED - KN	REVISED -
		DRAWN - AS	REVISED -
	PLOT SCALE = 40.0000 ' / in.	CHECKED -	REVISED -
	PLOT DATE = 1/31/2014	DATE -	REVISED -

STATE OF ILLINOIS
DEPARTMENT OF TRANSPORTATION

PAVEMENT MARKING AND SIGNING PLANS
HAWKEYE COURT /COUNTRY AIRE DRIVE

SCALE: | SHEET NO. 12 OF 28 SHEETS | STA. TO STA.

F.A.P. RTE.	SECTION	COUNTY	TOTAL SHEETS	SHEET NO.
331	(1-3)R-2, N-4, TS-4, HBK-1	WILLIAMSON	733	323
DRAWING NO.	PM-12	CONTRACT NO. 78221		
		ILLINOIS FED. AID PROJECT		

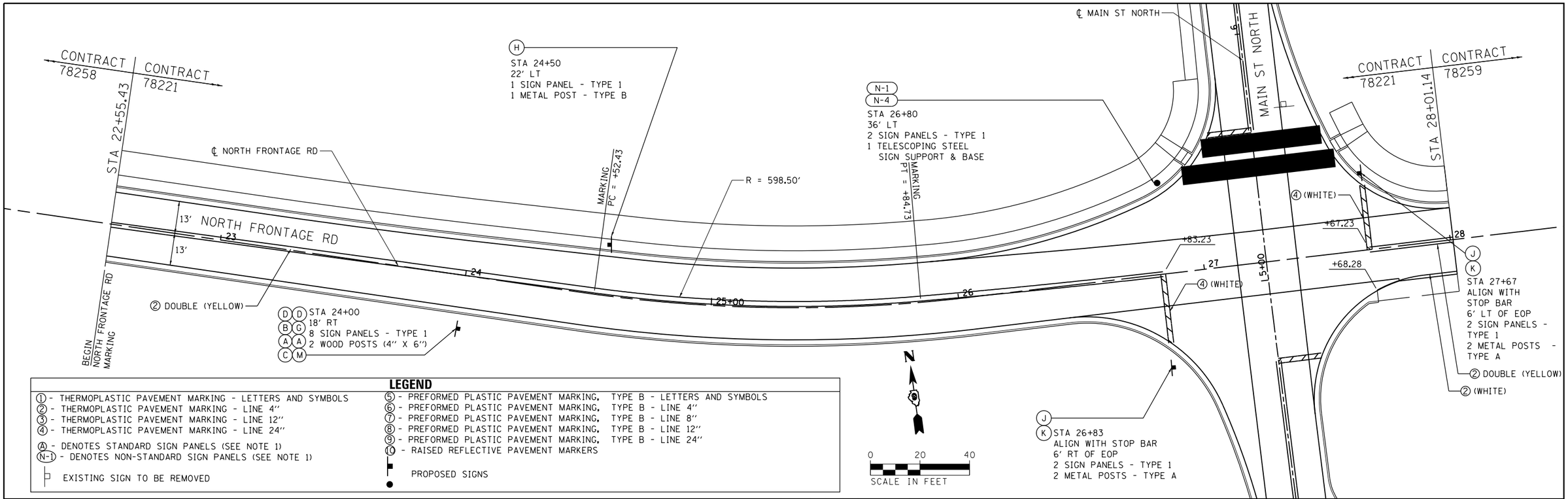

LEGEND

① - THERMOPLASTIC PAVEMENT MARKING - LETTERS AND SYMBOLS	⑤ - PREFORMED PLASTIC PAVEMENT MARKING, TYPE B - LETTERS AND SYMBOLS
② - THERMOPLASTIC PAVEMENT MARKING - LINE 4"	⑥ - PREFORMED PLASTIC PAVEMENT MARKING, TYPE B - LINE 4"
③ - THERMOPLASTIC PAVEMENT MARKING - LINE 12"	⑦ - PREFORMED PLASTIC PAVEMENT MARKING, TYPE B - LINE 8"
④ - THERMOPLASTIC PAVEMENT MARKING - LINE 24"	⑧ - PREFORMED PLASTIC PAVEMENT MARKING, TYPE B - LINE 12"
Ⓐ - DENOTES STANDARD SIGN PANELS (SEE NOTE 1)	⑨ - PREFORMED PLASTIC PAVEMENT MARKING, TYPE B - LINE 24"
(N-1) - DENOTES NON-STANDARD SIGN PANELS (SEE NOTE 1)	⑩ - RAISED REFLECTIVE PAVEMENT MARKERS
EXISTING SIGN TO BE REMOVED	PROPOSED SIGNS

NOTES:

1. FOR PROPOSED SIGN PANEL LAYOUT AND DIMENSIONS, SEE SIGN PANEL DETAILS.
2. PROPOSED SIGN OFFSET IS MEASURED FROM CENTERLINE OF SPECIFIED ROAD TO THE SIGN CENTER UNLESS OTHERWISE NOTED.
3. FOR A SUMMARY OF SIGN REMOVALS, SEE REMOVAL SCHEDULES.
4. DOUBLE YELLOW CENTERLINE PAVEMENT MARKING DETAILED WITH PC, PT AND RADIUS SHALL BE PLACED AT A SPLIT OF PAVEMENT EDGES.
5. SIGNING FOR MAIN ST NORTH IS COVERED ON PM-24 (TOP).
6. SIGNING FOR WOLF CREEK RD IS COVERED ON PM-09 (BOTTOM).

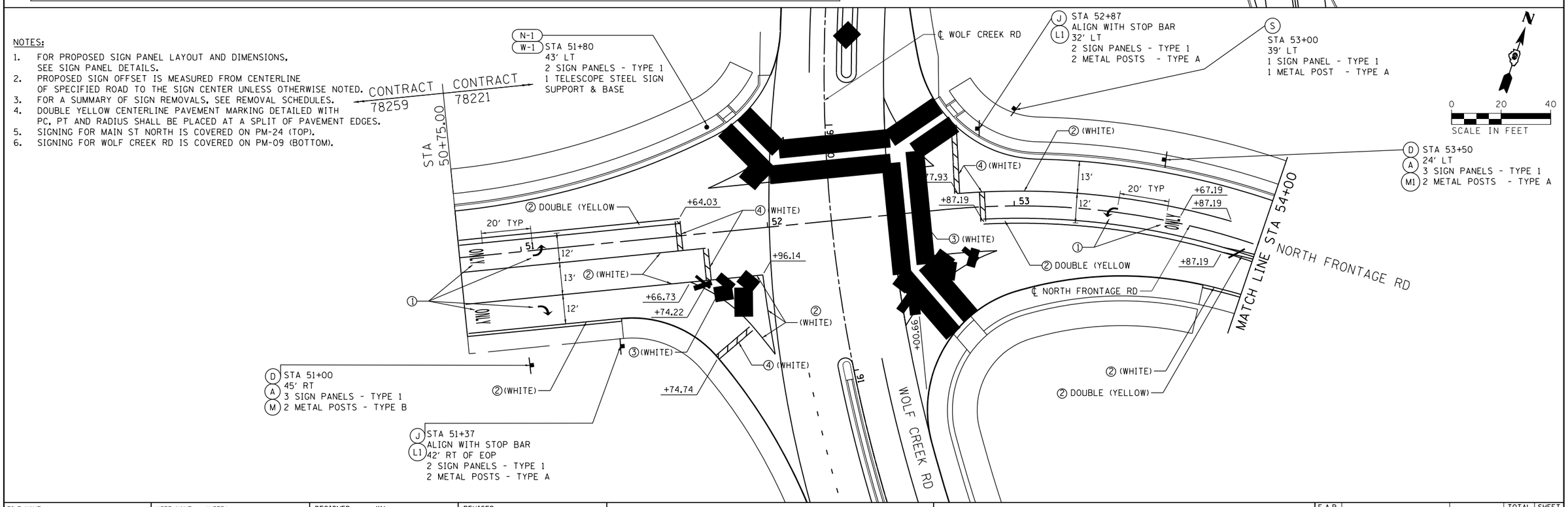

FILE NAME = c:\pw_work\pwidot\lavenderba\d0363618\D78221-sht-pmk-13.dgn	USER NAME = $USER$	DESIGNED - KN	REVISED -
		DRAWN - AS	REVISED -
	PLOT SCALE = 40.0000 ' / in.	CHECKED -	REVISED -
	PLOT DATE = 1/31/2014	DATE -	REVISED -

STATE OF ILLINOIS
DEPARTMENT OF TRANSPORTATION

PAVEMENT MARKING AND SIGNING PLANS
NORTH FRONTAGE ROAD

SCALE: | SHEET NO. 13 OF 28 SHEETS | STA. 22+55.43 TO STA. 55+00

F.A.P. RTE.	SECTION	COUNTY	TOTAL SHEETS	SHEET NO.
331	(1-3)R-2, N-4, TS-4, HBK-1	WILLIAMSON	733	324
DRAWING NO.	PM-13	CONTRACT NO. 78221		
		ILLINOIS FED. AID PROJECT		

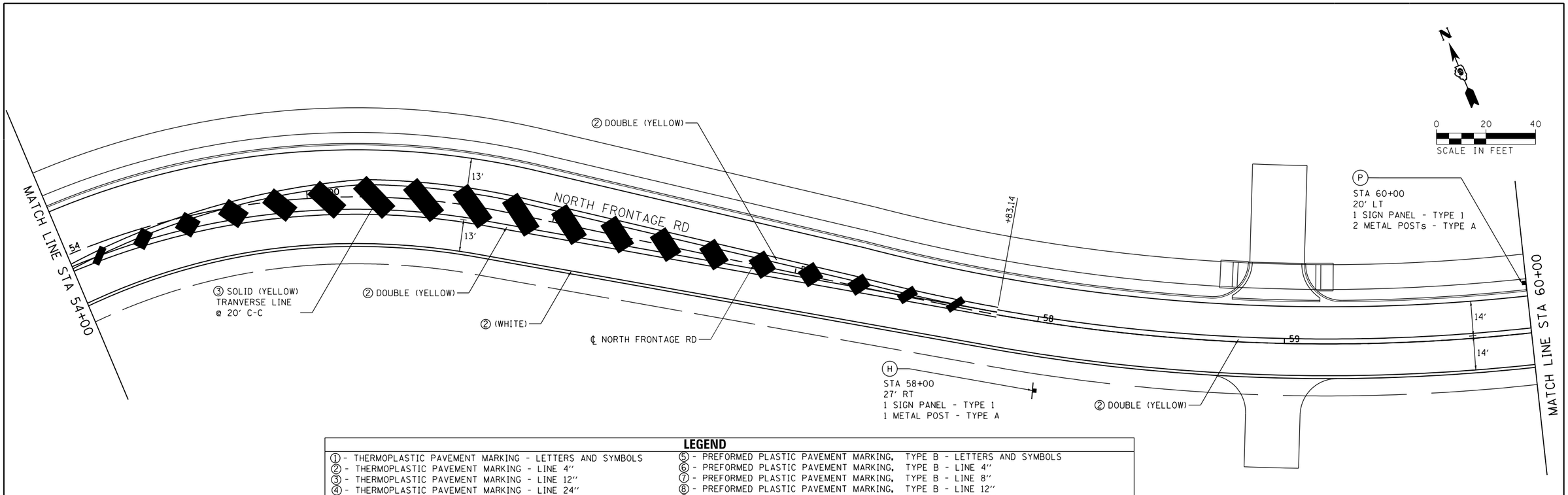

LEGEND

① - THERMOPLASTIC PAVEMENT MARKING - LETTERS AND SYMBOLS
② - THERMOPLASTIC PAVEMENT MARKING - LINE 4"
③ - THERMOPLASTIC PAVEMENT MARKING - LINE 12"
④ - THERMOPLASTIC PAVEMENT MARKING - LINE 24"

Ⓐ - DENOTES STANDARD SIGN PANELS (SEE NOTE 1)
(N-1) - DENOTES NON-STANDARD SIGN PANELS (SEE NOTE 1)

EXISTING SIGN TO BE REMOVED

⑤ - PREFORMED PLASTIC PAVEMENT MARKING, TYPE B - LETTERS AND SYMBOLS
⑥ - PREFORMED PLASTIC PAVEMENT MARKING, TYPE B - LINE 4"
⑦ - PREFORMED PLASTIC PAVEMENT MARKING, TYPE B - LINE 8"
⑧ - PREFORMED PLASTIC PAVEMENT MARKING, TYPE B - LINE 12"
⑨ - PREFORMED PLASTIC PAVEMENT MARKING, TYPE B - LINE 24"
⑩ - RAISED REFLECTIVE PAVEMENT MARKERS

PROPOSED SIGNS

NOTES:

1. FOR PROPOSED SIGN PANEL LAYOUT AND DIMENSIONS, SEE SIGN PANEL DETAILS.
2. PROPOSED SIGN OFFSET IS MEASURED FROM CENTERLINE OF SPECIFIED ROAD TO THE SIGN CENTER UNLESS OTHERWISE NOTED.
3. FOR A SUMMARY OF SIGN REMOVALS, SEE REMOVAL SCHEDULES.

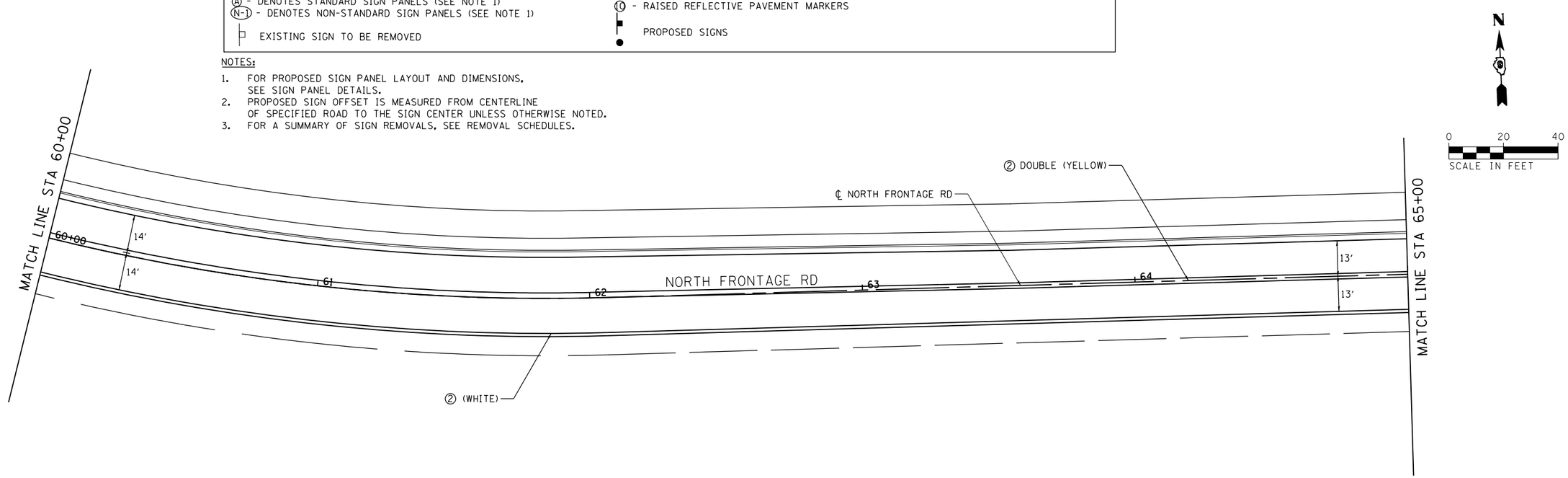

FILE NAME = c:\pw_work\pwidot\lavenderba\d0363618\D78221-sht-pmk-14.dgn	USER NAME = $USER$	DESIGNED - KN	REVISED -
		DRAWN - AS	REVISED -
	PLOT SCALE = 40.0000 ' / in.	CHECKED -	REVISED -
	PLOT DATE = 1/31/2014	DATE -	REVISED -

STATE OF ILLINOIS
DEPARTMENT OF TRANSPORTATION

PAVEMENT MARKING AND SIGNING PLANS
NORTH FRONTAGE ROAD

SCALE: | SHEET NO. 14 OF 28 SHEETS | STA. 55+00 TO STA. 66+00

F.A.P. RTE.	SECTION	COUNTY	TOTAL SHEETS	SHEET NO.
331	(1-3)R-2, N-4, TS-4, HBK-1	WILLIAMSON	733	325
DRAWING NO.	PM-14	CONTRACT NO. 78221		
		ILLINOIS FED. AID PROJECT		

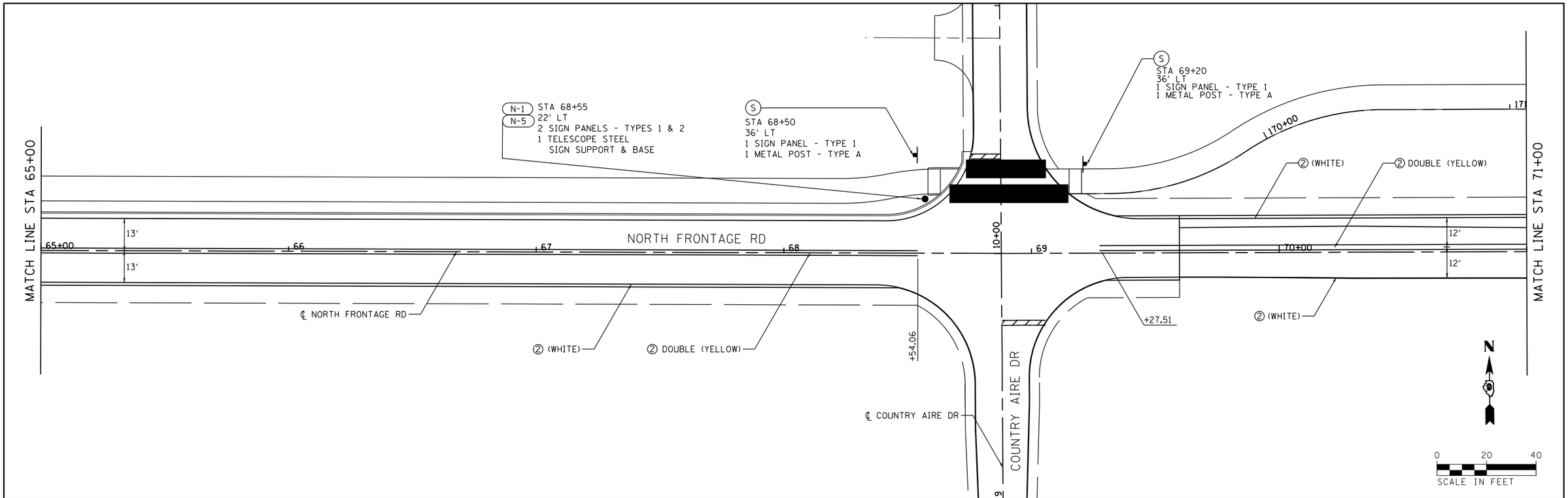

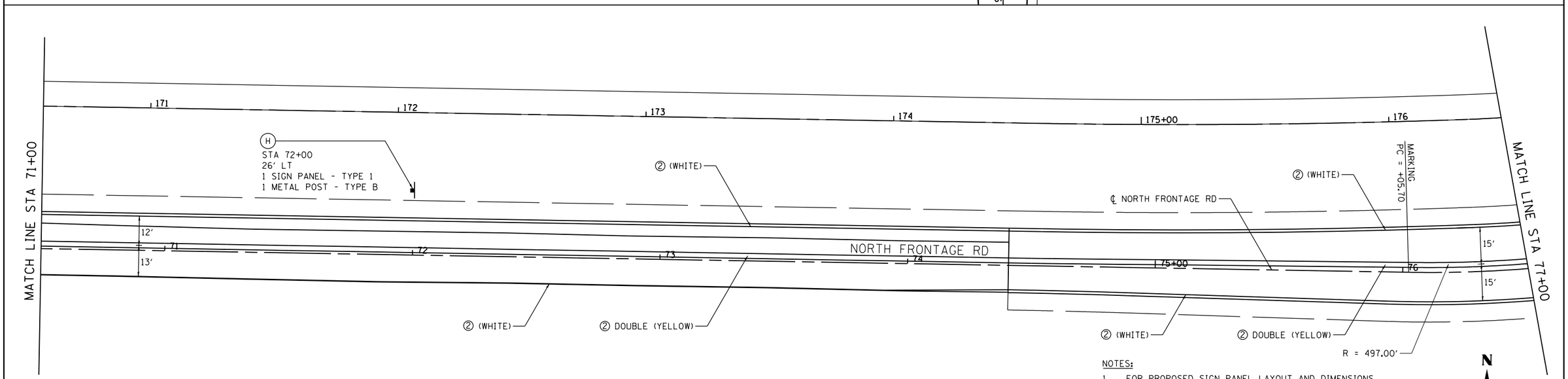

LEGEND

1 - THERMOPLASTIC PAVEMENT MARKING - LETTERS AND SYMBOLS
2 - THERMOPLASTIC PAVEMENT MARKING - LINE 4"
3 - THERMOPLASTIC PAVEMENT MARKING - LINE 12"
4 - THERMOPLASTIC PAVEMENT MARKING - LINE 24"

A - DENOTES STANDARD SIGN PANELS (SEE NOTE 1)
N-1 - DENOTES NON-STANDARD SIGN PANELS (SEE NOTE 1)

EXISTING SIGN TO BE REMOVED

5 - PREFORMED PLASTIC PAVEMENT MARKING, TYPE B - LETTERS AND SYMBOLS
6 - PREFORMED PLASTIC PAVEMENT MARKING, TYPE B - LINE 4"
7 - PREFORMED PLASTIC PAVEMENT MARKING, TYPE B - LINE 8"
8 - PREFORMED PLASTIC PAVEMENT MARKING, TYPE B - LINE 12"
9 - PREFORMED PLASTIC PAVEMENT MARKING, TYPE B - LINE 24"
10 - RAISED REFLECTIVE PAVEMENT MARKERS

PROPOSED SIGNS

NOTES:

1. FOR PROPOSED SIGN PANEL LAYOUT AND DIMENSIONS, SEE SIGN PANEL DETAILS.
2. PROPOSED SIGN OFFSET IS MEASURED FROM CENTERLINE OF SPECIFIED ROAD TO THE SIGN CENTER UNLESS OTHERWISE NOTED.
3. FOR A SUMMARY OF SIGN REMOVALS, SEE REMOVAL SCHEDULES.
4. DOUBLE YELLOW CENTERLINE PAVEMENT MARKING DETAILED WITH PC, PT AND RADIUS SHALL BE PLACED AT A SPLIT OF PAVEMENT EDGES.
5. SIGNING PLAN FOR NORTH FRONTAGE ROAD IS COVERED ON PM-12 (BOTTOM).

FILE NAME = c:\pw_work\pwidot\lavenderba\d0363618\D78221-sht-pmk-15.dgn	USER NAME = $USER$	DESIGNED - KN	REVISED -
		DRAWN - AS	REVISED -
	PLOT SCALE = 40.0000 ' / in.	CHECKED -	REVISED -
	PLOT DATE = 1/31/2014	DATE -	REVISED -

STATE OF ILLINOIS
DEPARTMENT OF TRANSPORTATION

PAVEMENT MARKING AND SIGNING PLANS
NORTH FRONTAGE ROAD

SCALE: | SHEET NO. 15 OF 28 SHEETS | STA. 66+00 TO STA. 77+00

F.A.P. RTE.	SECTION	COUNTY	TOTAL SHEETS	SHEET NO.
331	(1-3)R-2, N-4, TS-4, HBK-1	WILLIAMSON	733	326
DRAWING NO.	PM-15	CONTRACT NO. 78221		
		ILLINOIS FED. AID PROJECT		

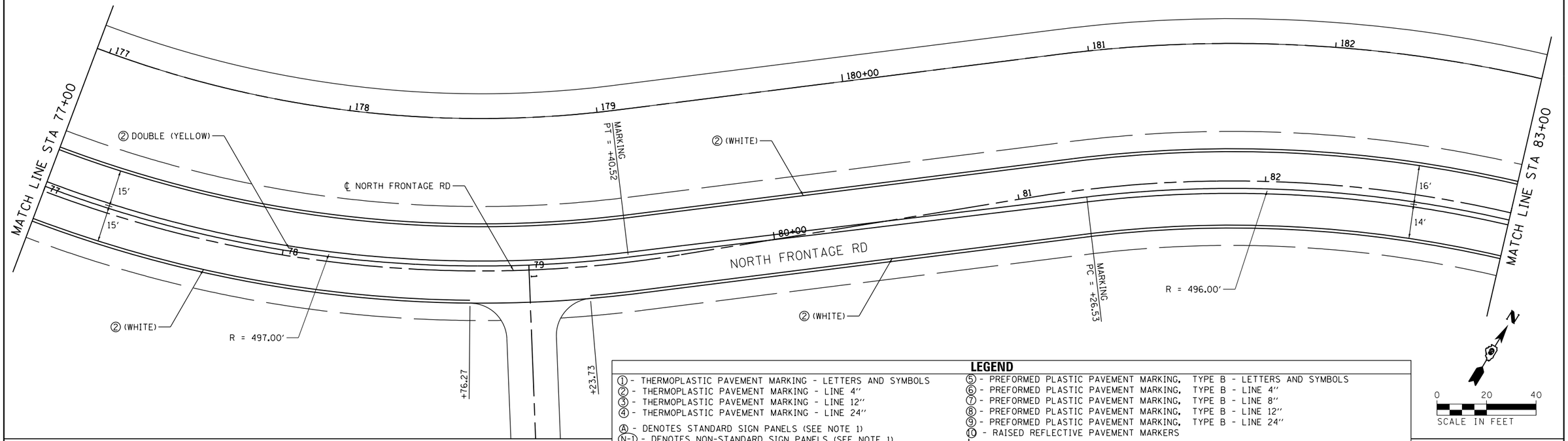

LEGEND

① - THERMOPLASTIC PAVEMENT MARKING - LETTERS AND SYMBOLS
② - THERMOPLASTIC PAVEMENT MARKING - LINE 4″
③ - THERMOPLASTIC PAVEMENT MARKING - LINE 12″
④ - THERMOPLASTIC PAVEMENT MARKING - LINE 24″

Ⓐ - DENOTES STANDARD SIGN PANELS (SEE NOTE 1)
(N-1) - DENOTES NON-STANDARD SIGN PANELS (SEE NOTE 1)

EXISTING SIGN TO BE REMOVED

⑤ - PREFORMED PLASTIC PAVEMENT MARKING, TYPE B - LETTERS AND SYMBOLS
⑥ - PREFORMED PLASTIC PAVEMENT MARKING, TYPE B - LINE 4″
⑦ - PREFORMED PLASTIC PAVEMENT MARKING, TYPE B - LINE 8″
⑧ - PREFORMED PLASTIC PAVEMENT MARKING, TYPE B - LINE 12″
⑨ - PREFORMED PLASTIC PAVEMENT MARKING, TYPE B - LINE 24″
⑩ - RAISED REFLECTIVE PAVEMENT MARKERS

PROPOSED SIGNS

NOTES:

1. FOR PROPOSED SIGN PANEL LAYOUT AND DIMENSIONS, SEE SIGN PANEL DETAILS.
2. PROPOSED SIGN OFFSET IS MEASURED FROM CENTERLINE OF SPECIFIED ROAD TO THE SIGN CENTER UNLESS OTHERWISE NOTED.
3. FOR A SUMMARY OF SIGN REMOVALS, SEE REMOVAL SCHEDULES.
4. DOUBLE YELLOW CENTERLINE PAVEMENT MARKING DETAILED WITH PC, PT AND RADIUS SHALL BE PLACED AT A SPLIT OF PAVEMENT EDGES.

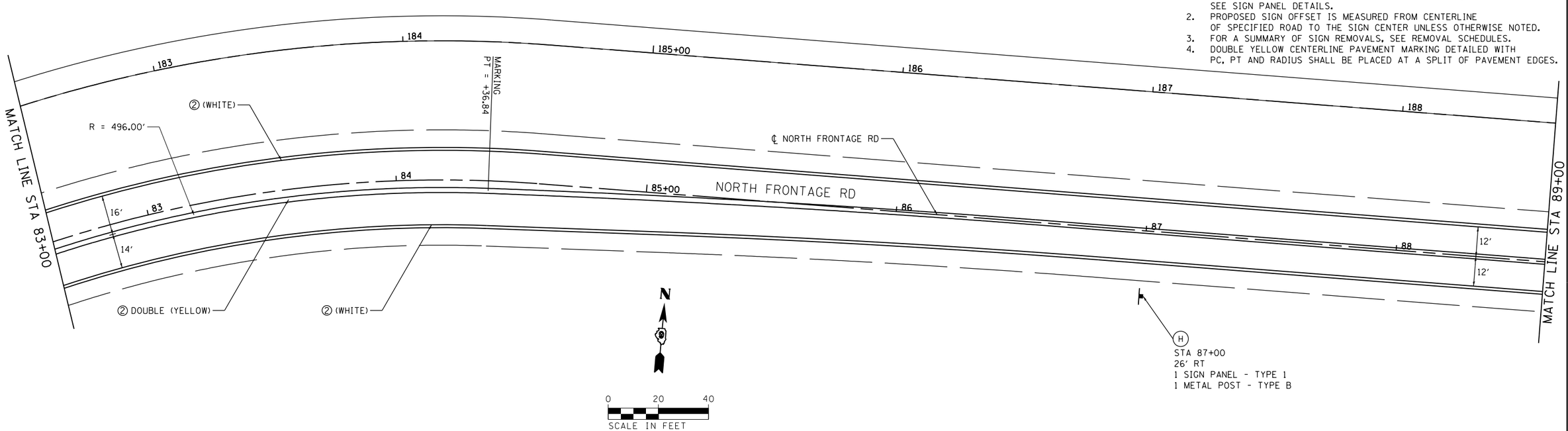

FILE NAME = c:\pw_work\pwidot\lavenderba\d0363618\D478221-sht-pmk-16.dgn	USER NAME = $USER$	DESIGNED - KN	REVISED -
		DRAWN - AS	REVISED -
	PLOT SCALE = 40.0000 ′ / in.	CHECKED -	REVISED -
	PLOT DATE = 1/31/2014	DATE -	REVISED -

STATE OF ILLINOIS
DEPARTMENT OF TRANSPORTATION

PAVEMENT MARKING AND SIGNING PLANS
NORTH FRONTAGE ROAD

SCALE: | SHEET NO. 16 OF 28 SHEETS | STA. 77+00 TO STA. 88+00

F.A.P. RTE.	SECTION	COUNTY	TOTAL SHEETS	SHEET NO.
331	(1-3)R-2, N-4, TS-4, HBK-1	WILLIAMSON	733	327
DRAWING NO.	PM-16	CONTRACT NO. 78221		
		ILLINOIS FED. AID PROJECT		

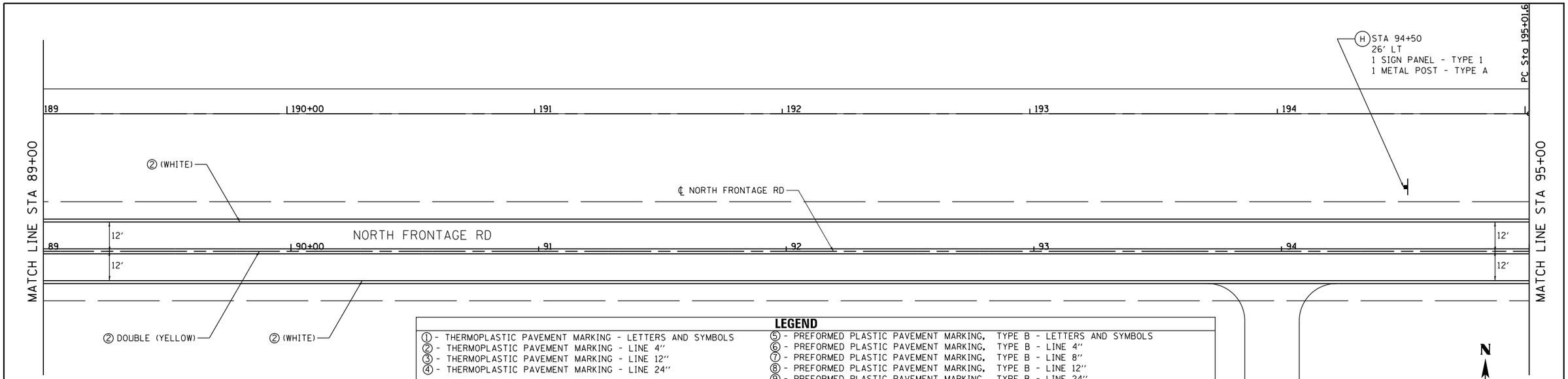

LEGEND

(1) - THERMOPLASTIC PAVEMENT MARKING - LETTERS AND SYMBOLS
(2) - THERMOPLASTIC PAVEMENT MARKING - LINE 4"
(3) - THERMOPLASTIC PAVEMENT MARKING - LINE 12"
(4) - THERMOPLASTIC PAVEMENT MARKING - LINE 24"
(A) - DENOTES STANDARD SIGN PANELS (SEE NOTE 1)
(N-1) - DENOTES NON-STANDARD SIGN PANELS (SEE NOTE 1)
EXISTING SIGN TO BE REMOVED

(5) - PREFORMED PLASTIC PAVEMENT MARKING, TYPE B - LETTERS AND SYMBOLS
(6) - PREFORMED PLASTIC PAVEMENT MARKING, TYPE B - LINE 4"
(7) - PREFORMED PLASTIC PAVEMENT MARKING, TYPE B - LINE 8"
(8) - PREFORMED PLASTIC PAVEMENT MARKING, TYPE B - LINE 12"
(9) - PREFORMED PLASTIC PAVEMENT MARKING, TYPE B - LINE 24"
(10) - RAISED REFLECTIVE PAVEMENT MARKERS
PROPOSED SIGNS

NOTES:

1. FOR PROPOSED SIGN PANEL LAYOUT AND DIMENSIONS, SEE SIGN PANEL DETAILS.
2. PROPOSED SIGN OFFSET IS MEASURED FROM CENTERLINE OF SPECIFIED ROAD TO THE SIGN CENTER UNLESS OTHERWISE NOTED.
3. FOR A SUMMARY OF SIGN REMOVALS, SEE REMOVAL SCHEDULES.
4. DOUBLE YELLOW CENTERLINE PAVEMENT MARKING DETAILED WITH PC, PT AND RADIUS SHALL BE PLACED AT A SPLIT OF PAVEMENT EDGES.
5. SIGNING PLANS FOR SAMUEL ROAD IS COVERED ON PM-26 (TOP).

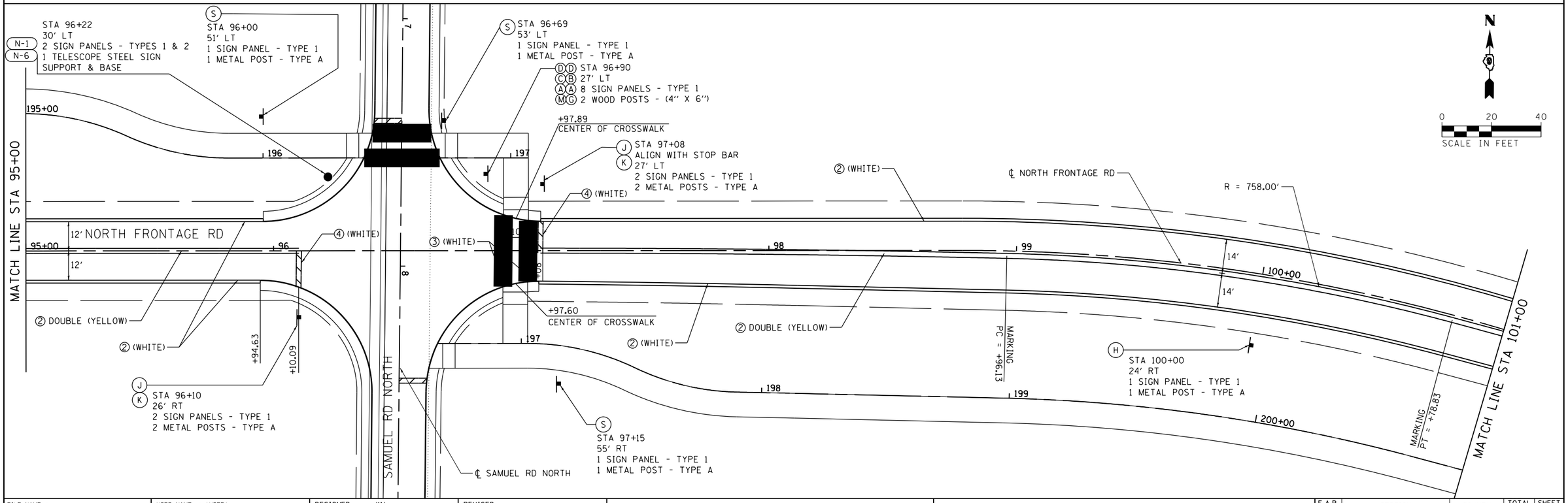

FILE NAME = c:\pw_work\pwidot\lavenderba\d0363618\D978221-sht-pmk-17.dgn	USER NAME = $USER$	DESIGNED - KN	REVISED -
		DRAWN - AS	REVISED -
	PLOT SCALE = 40.0000 ' / in.	CHECKED -	REVISED -
	PLOT DATE = 1/31/2014	DATE -	REVISED -

STATE OF ILLINOIS
DEPARTMENT OF TRANSPORTATION

PAVEMENT MARKING AND SIGNING PLANS
NORTH FRONTAGE ROAD

SCALE: | SHEET NO. 17 OF 28 SHEETS | STA. 88+00 TO STA. 99+00

F.A.P. RTE.	SECTION	COUNTY	TOTAL SHEETS	SHEET NO.
331	(1-3)R-2, N-4, TS-4, HBK-1	WILLIAMSON	733	328
DRAWING NO. PM-17		CONTRACT NO. 78221		
		ILLINOIS FED. AID PROJECT		

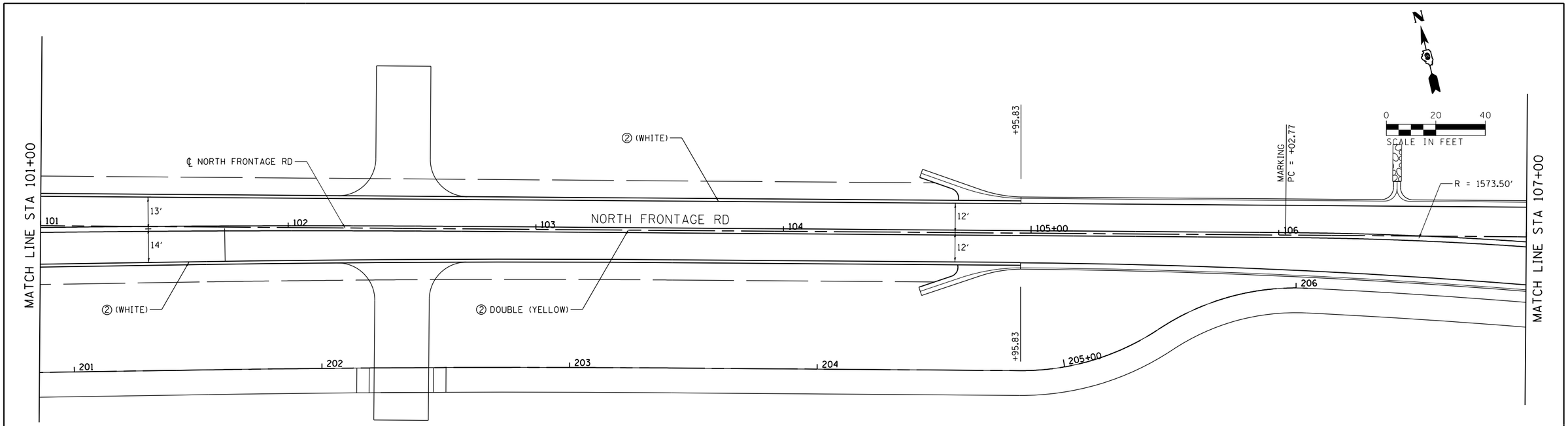

LEGEND

① - THERMOPLASTIC PAVEMENT MARKING - LETTERS AND SYMBOLS
② - THERMOPLASTIC PAVEMENT MARKING - LINE 4″
③ - THERMOPLASTIC PAVEMENT MARKING - LINE 12″
④ - THERMOPLASTIC PAVEMENT MARKING - LINE 24″
Ⓐ - DENOTES STANDARD SIGN PANELS (SEE NOTE 1)
(N-1) - DENOTES NON-STANDARD SIGN PANELS (SEE NOTE 1)
EXISTING SIGN TO BE REMOVED

⑤ - PREFORMED PLASTIC PAVEMENT MARKING, TYPE B - LETTERS AND SYMBOLS
⑥ - PREFORMED PLASTIC PAVEMENT MARKING, TYPE B - LINE 4″
⑦ - PREFORMED PLASTIC PAVEMENT MARKING, TYPE B - LINE 8″
⑧ - PREFORMED PLASTIC PAVEMENT MARKING, TYPE B - LINE 12″
⑨ - PREFORMED PLASTIC PAVEMENT MARKING, TYPE B - LINE 24″
⑩ - RAISED REFLECTIVE PAVEMENT MARKERS
PROPOSED SIGNS

NOTES:

1. FOR PROPOSED SIGN PANEL LAYOUT AND DIMENSIONS, SEE SIGN PANEL DETAILS.
2. PROPOSED SIGN OFFSET IS MEASURED FROM CENTERLINE OF SPECIFIED ROAD TO THE SIGN CENTER UNLESS OTHERWISE NOTED.
3. FOR A SUMMARY OF SIGN REMOVALS, SEE REMOVAL SCHEDULES.
4. DOUBLE YELLOW CENTERLINE PAVEMENT MARKING DETAILED WITH PC, PT AND RADIUS SHALL BE PLACED AT A SPLIT OF PAVEMENT EDGES.
5. SIGNING FOR FLEMING RD IS COVERED ON PM-20 (BOTTOM).

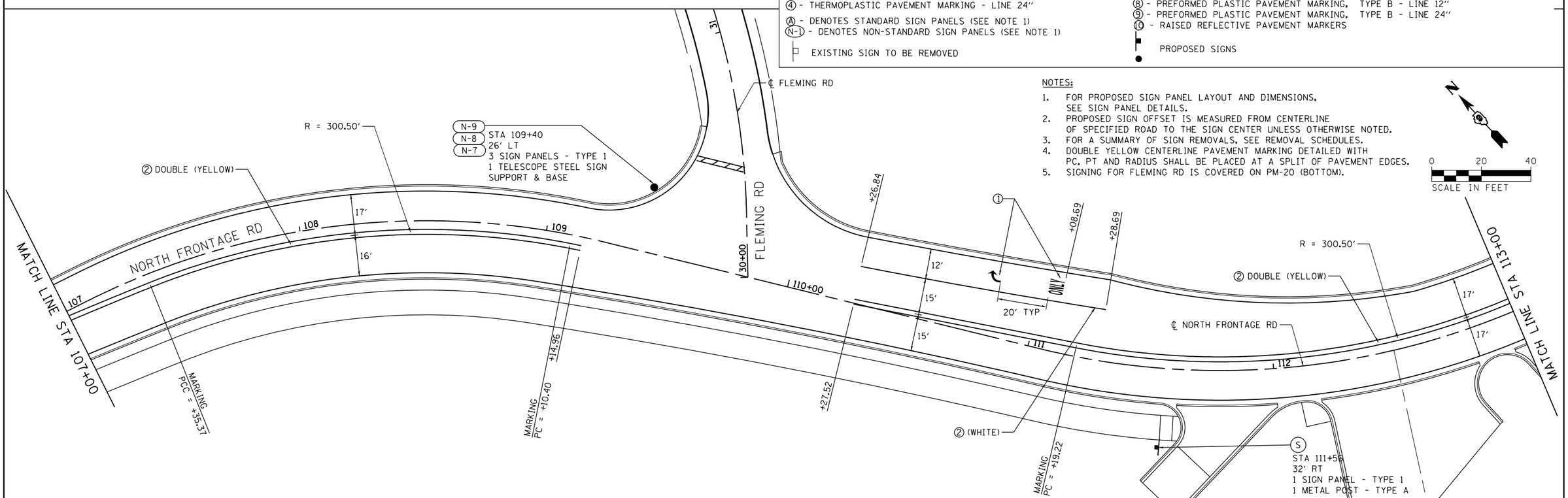

FILE NAME = c:\pw_work\pwidot\lavenderba\d0363618\D478221-sht-pmk-18.dgn	USER NAME = $USER$	DESIGNED - KN	REVISED -
	PLOT SCALE = 40.0000 ′ / in.	DRAWN - AS	REVISED -
	PLOT DATE = 1/31/2014	CHECKED -	REVISED -
		DATE -	REVISED -

STATE OF ILLINOIS
DEPARTMENT OF TRANSPORTATION

PAVEMENT MARKING AND SIGNING PLANS
NORTH FRONTAGE ROAD

SCALE: | SHEET NO. 18 OF 28 SHEETS | STA. 101+00 TO STA. 113+00

F.A.P. RTE.	SECTION	COUNTY	TOTAL SHEETS	SHEET NO.
331	(1-3)R-2, N-4, TS-4, HBK-1	WILLIAMSON	733	329
DRAWING NO.	PM-18	CONTRACT NO. 78221		
		ILLINOIS FED. AID PROJECT		

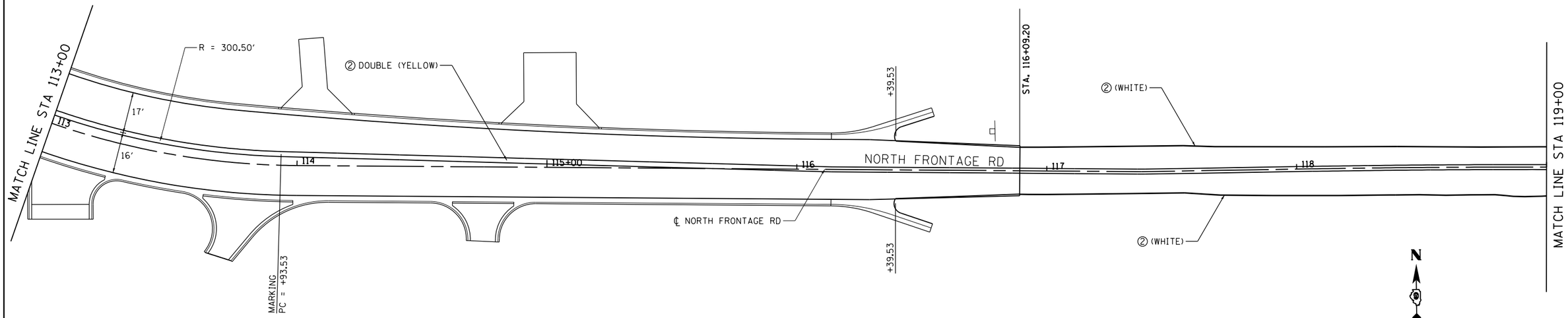

LEGEND

① - THERMOPLASTIC PAVEMENT MARKING - LETTERS AND SYMBOLS
② - THERMOPLASTIC PAVEMENT MARKING - LINE 4''
③ - THERMOPLASTIC PAVEMENT MARKING - LINE 12''
④ - THERMOPLASTIC PAVEMENT MARKING - LINE 24''

Ⓐ - DENOTES STANDARD SIGN PANELS (SEE NOTE 1)
(N-1) - DENOTES NON-STANDARD SIGN PANELS (SEE NOTE 1)

EXISTING SIGN TO BE REMOVED

⑤ - PREFORMED PLASTIC PAVEMENT MARKING, TYPE B - LETTERS AND SYMBOLS
⑥ - PREFORMED PLASTIC PAVEMENT MARKING, TYPE B - LINE 4''
⑦ - PREFORMED PLASTIC PAVEMENT MARKING, TYPE B - LINE 8''
⑧ - PREFORMED PLASTIC PAVEMENT MARKING, TYPE B - LINE 12''
⑨ - PREFORMED PLASTIC PAVEMENT MARKING, TYPE B - LINE 24''
⑩ - RAISED REFLECTIVE PAVEMENT MARKERS

PROPOSED SIGNS

NOTES:

1. FOR PROPOSED SIGN PANEL LAYOUT AND DIMENSIONS, SEE SIGN PANEL DETAILS.
2. PROPOSED SIGN OFFSET IS MEASURED FROM CENTERLINE OF SPECIFIED ROAD TO THE SIGN CENTER UNLESS OTHERWISE NOTED.
3. FOR A SUMMARY OF SIGN REMOVALS, SEE REMOVAL SCHEDULES.
4. DOUBLE YELLOW CENTERLINE PAVEMENT MARKING DETAILED WITH PC, PT AND RADIUS SHALL BE PLACED AT A SPLIT OF PAVEMENT EDGES.
5. SIGNING FOR BRIGGS RD IS COVERED ON PM-27 (TOP).

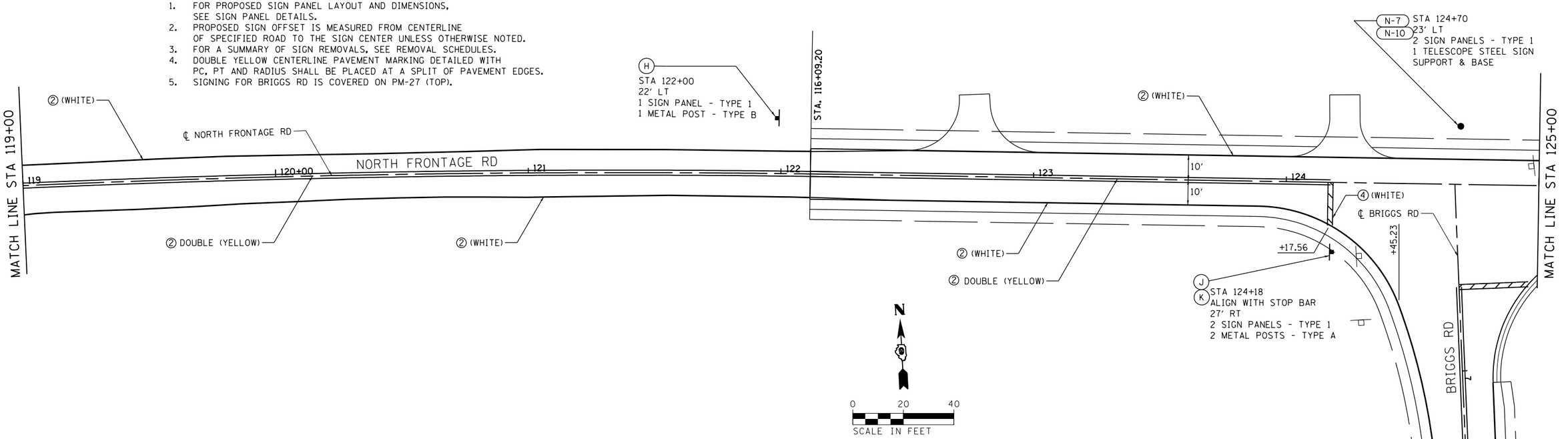

FILE NAME = c:\pw_work\pwidot\lavenderba\d0363618\D78221-sht-pmk-19.dgn	USER NAME = $USER$	DESIGNED - KN	REVISED -
		DRAWN - AS	REVISED -
	PLOT SCALE = 40.0000 ' / in.	CHECKED -	REVISED -
	PLOT DATE = 1/31/2014	DATE -	REVISED -

STATE OF ILLINOIS
DEPARTMENT OF TRANSPORTATION

PAVEMENT MARKING AND SIGNING PLANS
NORTH FRONTAGE ROAD

SCALE: | SHEET NO. 19 OF 28 SHEETS | STA. 110+00 TO STA. 121+00

F.A.P. RTE.	SECTION	COUNTY	TOTAL SHEETS	SHEET NO.
331	(1-3)R-2, N-4, TS-4, HBK-1	WILLIAMSON	733	330
DRAWING NO. PM-19		CONTRACT NO. 78221		
		ILLINOIS FED. AID PROJECT		

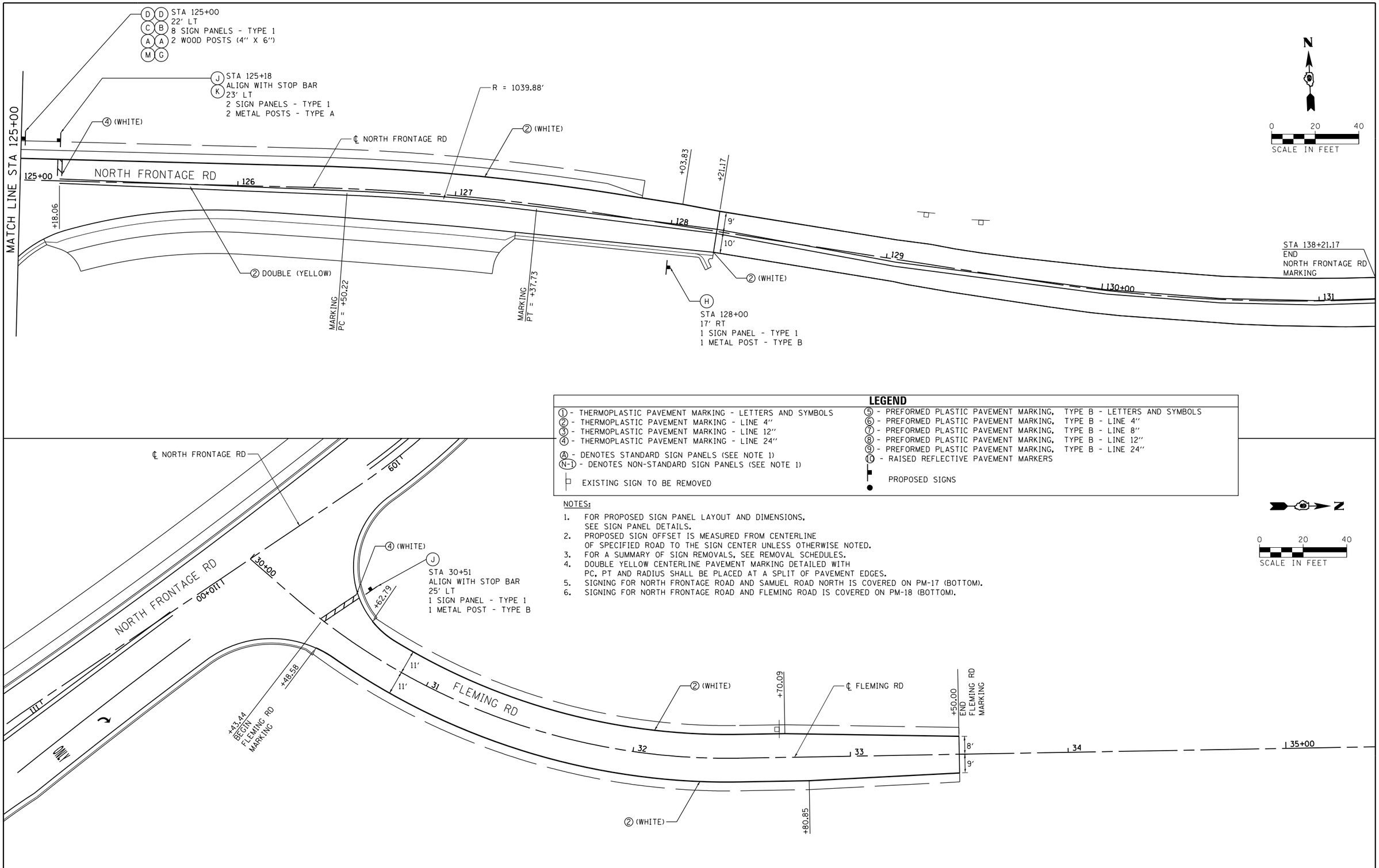

LEGEND

① - THERMOPLASTIC PAVEMENT MARKING - LETTERS AND SYMBOLS
② - THERMOPLASTIC PAVEMENT MARKING - LINE 4"
③ - THERMOPLASTIC PAVEMENT MARKING - LINE 12"
④ - THERMOPLASTIC PAVEMENT MARKING - LINE 24"

Ⓐ - DENOTES STANDARD SIGN PANELS (SEE NOTE 1)
(N-1) - DENOTES NON-STANDARD SIGN PANELS (SEE NOTE 1)

EXISTING SIGN TO BE REMOVED

⑤ - PREFORMED PLASTIC PAVEMENT MARKING, TYPE B - LETTERS AND SYMBOLS
⑥ - PREFORMED PLASTIC PAVEMENT MARKING, TYPE B - LINE 4"
⑦ - PREFORMED PLASTIC PAVEMENT MARKING, TYPE B - LINE 8"
⑧ - PREFORMED PLASTIC PAVEMENT MARKING, TYPE B - LINE 12"
⑨ - PREFORMED PLASTIC PAVEMENT MARKING, TYPE B - LINE 24"
⑩ - RAISED REFLECTIVE PAVEMENT MARKERS

PROPOSED SIGNS

NOTES:

1. FOR PROPOSED SIGN PANEL LAYOUT AND DIMENSIONS, SEE SIGN PANEL DETAILS.
2. PROPOSED SIGN OFFSET IS MEASURED FROM CENTERLINE OF SPECIFIED ROAD TO THE SIGN CENTER UNLESS OTHERWISE NOTED.
3. FOR A SUMMARY OF SIGN REMOVALS, SEE REMOVAL SCHEDULES.
4. DOUBLE YELLOW CENTERLINE PAVEMENT MARKING DETAILED WITH PC, PT AND RADIUS SHALL BE PLACED AT A SPLIT OF PAVEMENT EDGES.
5. SIGNING FOR NORTH FRONTAGE ROAD AND SAMUEL ROAD NORTH IS COVERED ON PM-17 (BOTTOM).
6. SIGNING FOR NORTH FRONTAGE ROAD AND FLEMING ROAD IS COVERED ON PM-18 (BOTTOM).

FILE NAME = c:\pw_work\pwidot\lavenderba\d0363618\D78221-sht-pmk-20.dgn	USER NAME = $USER$	DESIGNED - KN	REVISED -
		DRAWN - AS	REVISED -
	PLOT SCALE = 40.0000 ' / in.	CHECKED -	REVISED -
	PLOT DATE = 1/31/2014	DATE -	REVISED -

STATE OF ILLINOIS
DEPARTMENT OF TRANSPORTATION

PAVEMENT MARKING AND SIGNING PLANS
NORTH FRONTAGE ROAD / FLEMING ROAD

SCALE: | SHEET NO. 20 OF 28 SHEETS | STA. 121+00 TO STA. 128+21.17

F.A.P. RTE.	SECTION	COUNTY	TOTAL SHEETS	SHEET NO.
331	(1-3)R-2, N-4, TS-4, HBK-1	WILLIAMSON	733	331
DRAWING NO. PM-20		CONTRACT NO. 78221		
		ILLINOIS FED. AID PROJECT		

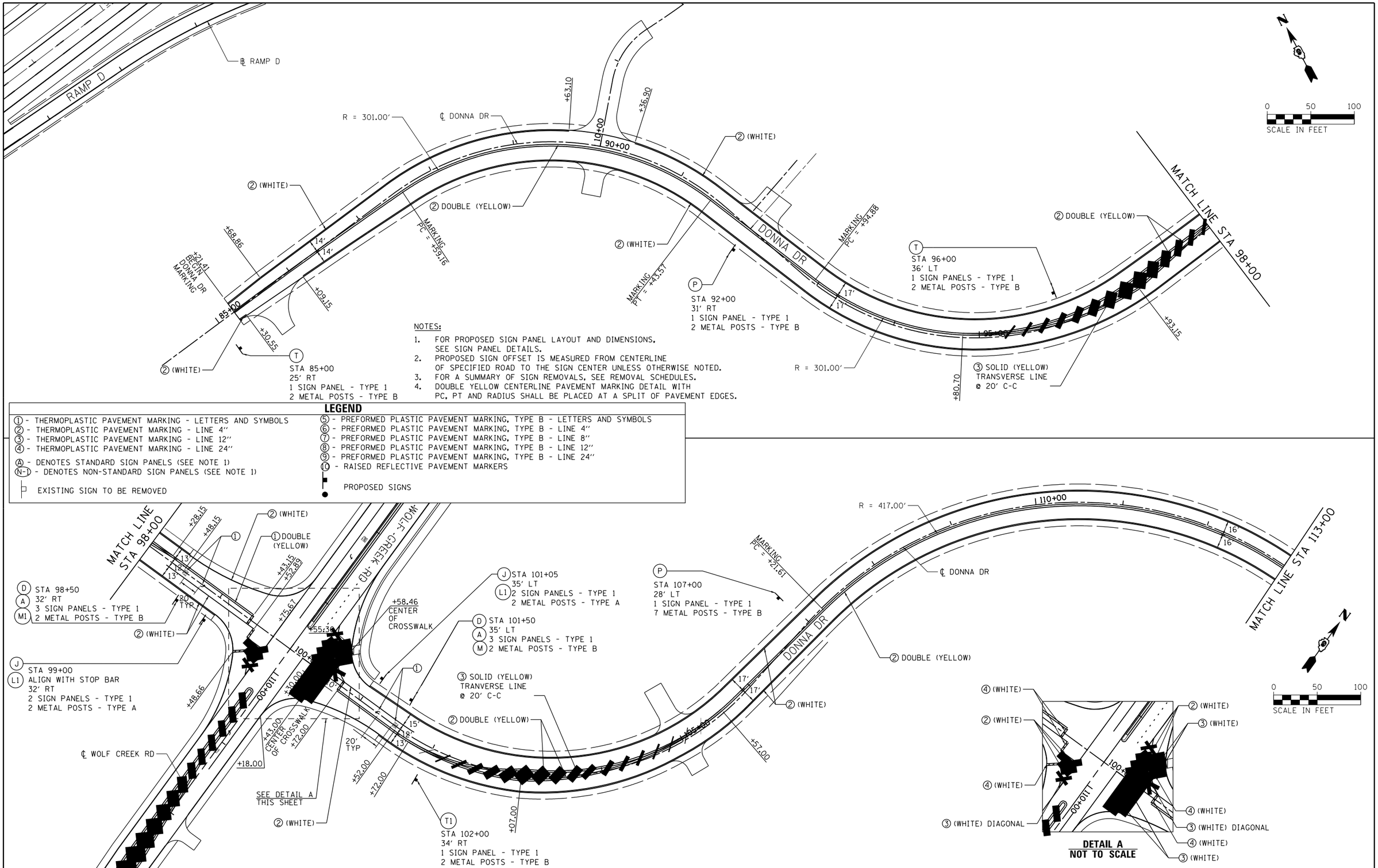

NOTES:

1. FOR PROPOSED SIGN PANEL LAYOUT AND DIMENSIONS, SEE SIGN PANEL DETAILS.
2. PROPOSED SIGN OFFSET IS MEASURED FROM CENTERLINE OF SPECIFIED ROAD TO THE SIGN CENTER UNLESS OTHERWISE NOTED.
3. FOR A SUMMARY OF SIGN REMOVALS, SEE REMOVAL SCHEDULES.
4. DOUBLE YELLOW CENTERLINE PAVEMENT MARKING DETAIL WITH PC, PT AND RADIUS SHALL BE PLACED AT A SPLIT OF PAVEMENT EDGES.

LEGEND

① - THERMOPLASTIC PAVEMENT MARKING - LETTERS AND SYMBOLS
② - THERMOPLASTIC PAVEMENT MARKING - LINE 4"
③ - THERMOPLASTIC PAVEMENT MARKING - LINE 12"
④ - THERMOPLASTIC PAVEMENT MARKING - LINE 24"
Ⓐ - DENOTES STANDARD SIGN PANELS (SEE NOTE 1)
(N-1) - DENOTES NON-STANDARD SIGN PANELS (SEE NOTE 1)
EXISTING SIGN TO BE REMOVED
⑤ - PREFORMED PLASTIC PAVEMENT MARKING, TYPE B - LETTERS AND SYMBOLS
⑥ - PREFORMED PLASTIC PAVEMENT MARKING, TYPE B - LINE 4"
⑦ - PREFORMED PLASTIC PAVEMENT MARKING, TYPE B - LINE 8"
⑧ - PREFORMED PLASTIC PAVEMENT MARKING, TYPE B - LINE 12"
⑨ - PREFORMED PLASTIC PAVEMENT MARKING, TYPE B - LINE 24"
⑩ - RAISED REFLECTIVE PAVEMENT MARKERS
PROPOSED SIGNS

FILE NAME = c:\pw_work\pwidot\lavenderba\d0363618\D78221-sht-pmk-21.dgn	USER NAME = $USER$	DESIGNED - KN	REVISED -
		DRAWN - AS	REVISED -
	PLOT SCALE = 100.0000 ' / in.	CHECKED -	REVISED -
	PLOT DATE = 1/31/2014	DATE -	REVISED -

STATE OF ILLINOIS
DEPARTMENT OF TRANSPORTATION

PAVEMENT MARKING AND SIGNING PLANS
DONNA DRIVE /CLARK STREET

SCALE: | SHEET NO. 21 OF 28 SHEETS | STA. 85+21.41 TO STA. 115+50

F.A.P. RTE.	SECTION	COUNTY	TOTAL SHEETS	SHEET NO.
331	(1-3)R-2, N-4, TS-4, HBK-1	WILLIAMSON	733	332
DRAWING NO. PM-21		CONTRACT NO. 78221		
		ILLINOIS FED. AID PROJECT		

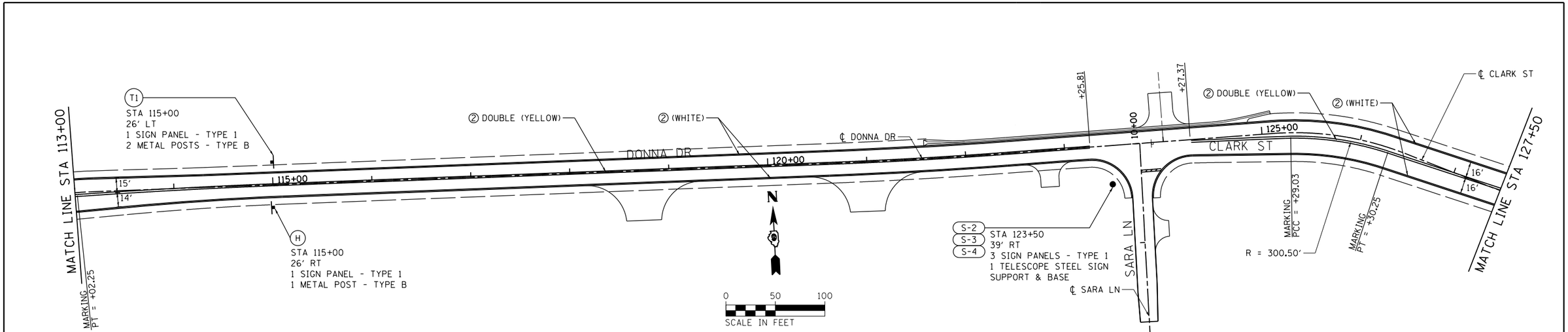

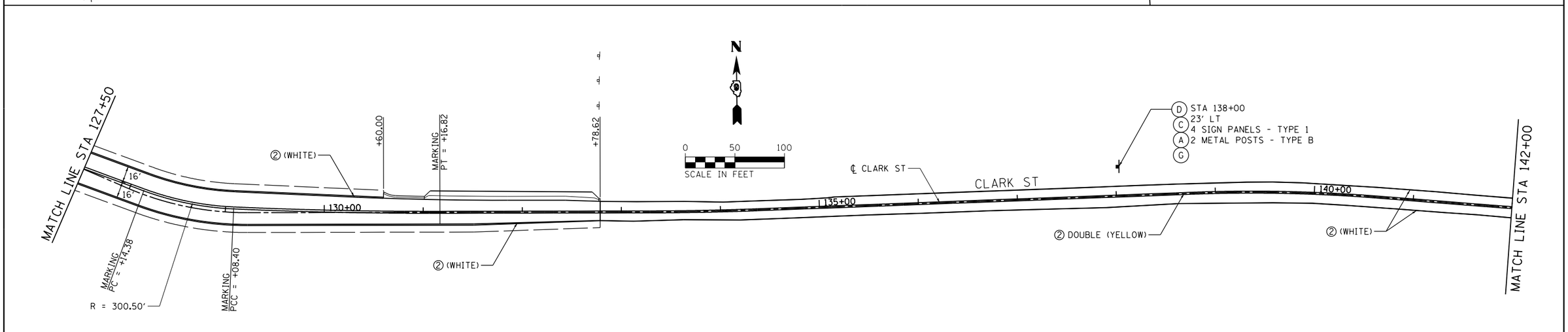

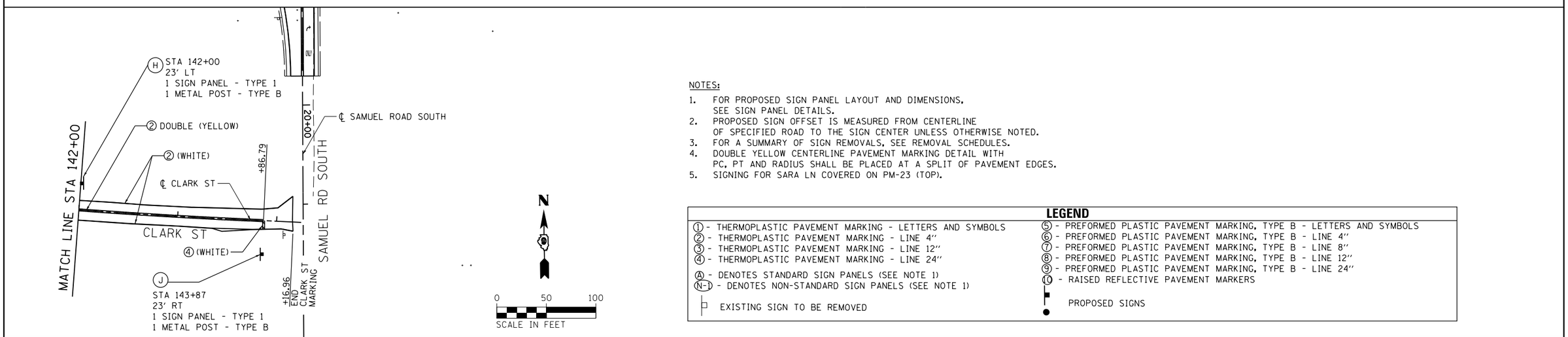

NOTES:

1. FOR PROPOSED SIGN PANEL LAYOUT AND DIMENSIONS, SEE SIGN PANEL DETAILS.
2. PROPOSED SIGN OFFSET IS MEASURED FROM CENTERLINE OF SPECIFIED ROAD TO THE SIGN CENTER UNLESS OTHERWISE NOTED.
3. FOR A SUMMARY OF SIGN REMOVALS, SEE REMOVAL SCHEDULES.
4. DOUBLE YELLOW CENTERLINE PAVEMENT MARKING DETAIL WITH PC, PT AND RADIUS SHALL BE PLACED AT A SPLIT OF PAVEMENT EDGES.
5. SIGNING FOR SARA LN COVERED ON PM-23 (TOP).

LEGEND

① - THERMOPLASTIC PAVEMENT MARKING - LETTERS AND SYMBOLS	⑤ - PREFORMED PLASTIC PAVEMENT MARKING, TYPE B - LETTERS AND SYMBOLS
② - THERMOPLASTIC PAVEMENT MARKING - LINE 4"	⑥ - PREFORMED PLASTIC PAVEMENT MARKING, TYPE B - LINE 4"
③ - THERMOPLASTIC PAVEMENT MARKING - LINE 12"	⑦ - PREFORMED PLASTIC PAVEMENT MARKING, TYPE B - LINE 8"
④ - THERMOPLASTIC PAVEMENT MARKING - LINE 24"	⑧ - PREFORMED PLASTIC PAVEMENT MARKING, TYPE B - LINE 12"
Ⓐ - DENOTES STANDARD SIGN PANELS (SEE NOTE 1)	⑨ - PREFORMED PLASTIC PAVEMENT MARKING, TYPE B - LINE 24"
(N-1) - DENOTES NON-STANDARD SIGN PANELS (SEE NOTE 1)	(10) - RAISED REFLECTIVE PAVEMENT MARKERS
EXISTING SIGN TO BE REMOVED	PROPOSED SIGNS

FILE NAME = c:\pw_work\pwidot\lavenderba\d0363618\D978221-sht-pmk-22.dgn	USER NAME = $USER$	DESIGNED - KN	REVISED -
	PLOT SCALE = 100.0000 ' / in.	DRAWN - AS	REVISED -
	PLOT DATE = 1/31/2014	CHECKED -	REVISED -
		DATE -	REVISED -

STATE OF ILLINOIS
DEPARTMENT OF TRANSPORTATION

PAVEMENT MARKING AND SIGNING PLANS
DONNA DRIVE /CLARK STREET

SCALE: | SHEET NO. 22 OF 28 SHEETS | STA. 115+50 TO STA. 144+16.11

F.A.P. RTE.	SECTION	COUNTY	TOTAL SHEETS	SHEET NO.
331	(1-3)R-2, N-4, TS-4, HBK-1	WILLIAMSON	733	333
DRAWING NO. PM-22		CONTRACT NO. 78221		
		ILLINOIS FED. AID PROJECT		

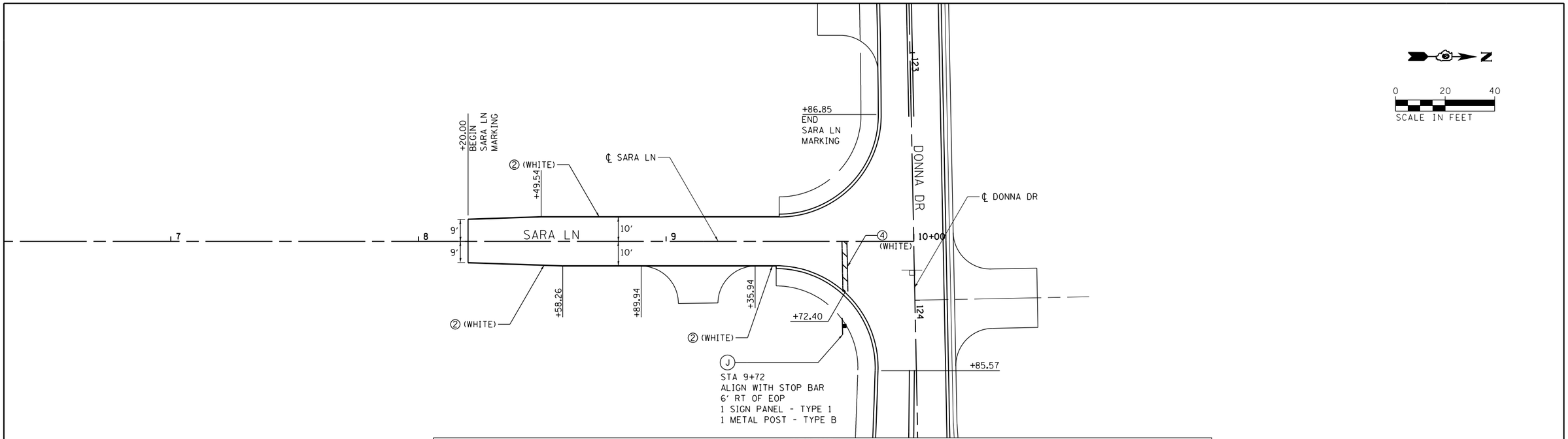

LEGEND

① - THERMOPLASTIC PAVEMENT MARKING - LETTERS AND SYMBOLS
② - THERMOPLASTIC PAVEMENT MARKING - LINE 4″
③ - THERMOPLASTIC PAVEMENT MARKING - LINE 12″
④ - THERMOPLASTIC PAVEMENT MARKING - LINE 24″

Ⓐ - DENOTES STANDARD SIGN PANELS (SEE NOTE 1)
(N-1) - DENOTES NON-STANDARD SIGN PANELS (SEE NOTE 1)

EXISTING SIGN TO BE REMOVED

⑤ - PREFORMED PLASTIC PAVEMENT MARKING, TYPE B - LETTERS AND SYMBOLS
⑥ - PREFORMED PLASTIC PAVEMENT MARKING, TYPE B - LINE 4″
⑦ - PREFORMED PLASTIC PAVEMENT MARKING, TYPE B - LINE 8″
⑧ - PREFORMED PLASTIC PAVEMENT MARKING, TYPE B - LINE 12″
⑨ - PREFORMED PLASTIC PAVEMENT MARKING, TYPE B - LINE 24″
⑩ - RAISED REFLECTIVE PAVEMENT MARKERS

PROPOSED SIGNS

NOTES:

1. FOR PROPOSED SIGN PANEL LAYOUT AND DIMENSIONS, SEE SIGN PANEL DETAILS.
2. PROPOSED SIGN OFFSET IS MEASURED FROM CENTERLINE OF SPECIFIED ROAD TO THE SIGN CENTER UNLESS OTHERWISE NOTED.
3. FOR A SUMMARY OF SIGN REMOVALS, SEE REMOVAL SCHEDULES.
4. SIGNING FOR DONNA DR COVERED ON PM-22 (TOP).

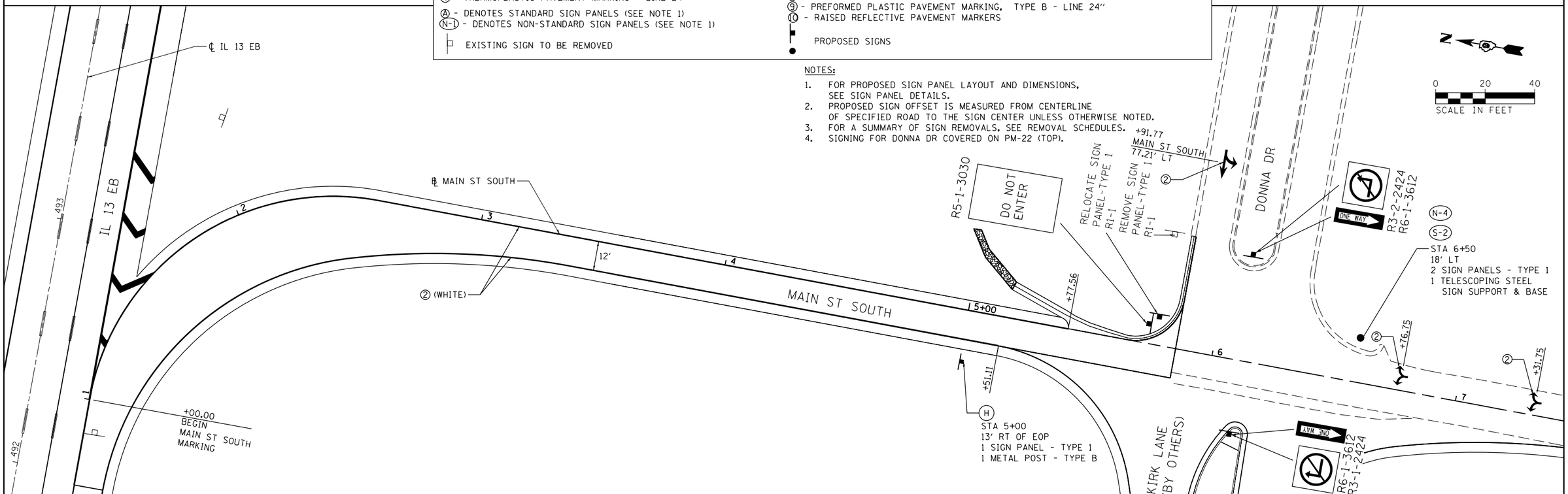

FILE NAME = c:\pw_work\pwidot\lavenderba\d0363618\D178221-sht-pmk-23.dgn	USER NAME = $USER$	DESIGNED - KN	REVISED -
		DRAWN - AS	REVISED -
	PLOT SCALE = 40.0000 ′ / in.	CHECKED -	REVISED -
	PLOT DATE = 1/31/2014	DATE -	REVISED -

STATE OF ILLINOIS
DEPARTMENT OF TRANSPORTATION

PAVEMENT MARKING AND SIGNING PLANS
SARA LN /MAIN STREET SOUTH

SCALE: | SHEET NO. 23 OF 28 SHEETS | STA. 1+00 TO STA. 7+31.75

F.A.P. RTE.	SECTION	COUNTY	TOTAL SHEETS	SHEET NO.
331	(1-3)R-2, N-4, TS-4, HBK-1	WILLIAMSON	733	334
DRAWING NO. PM-23		CONTRACT NO. 78221		
		ILLINOIS FED. AID PROJECT		

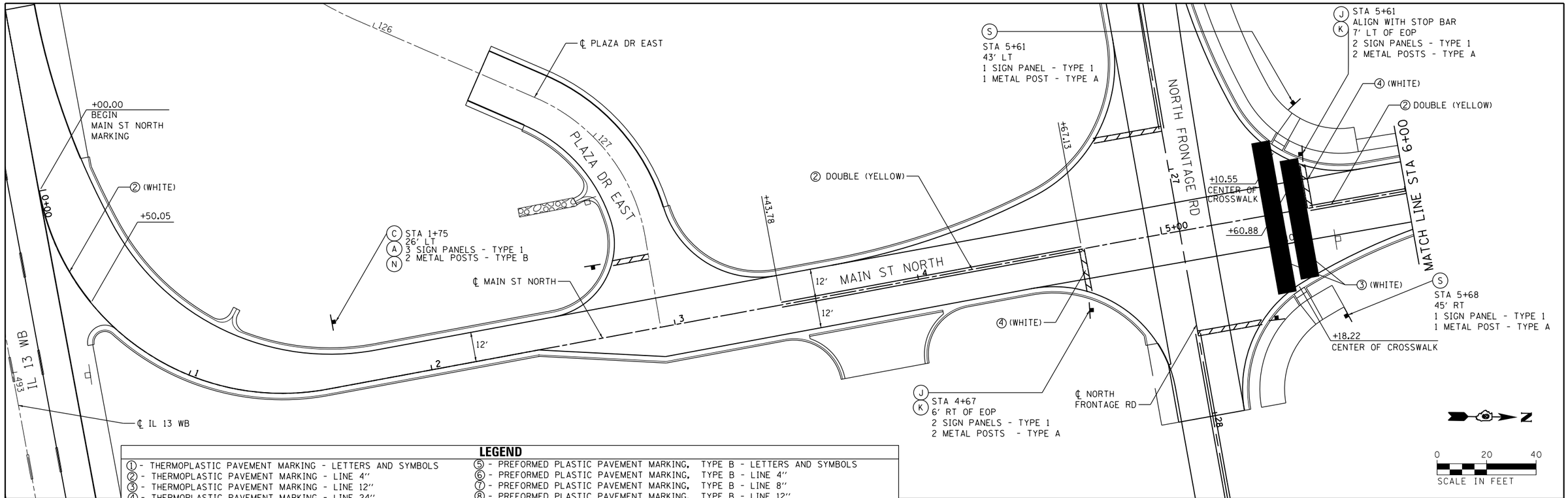

LEGEND

① - THERMOPLASTIC PAVEMENT MARKING - LETTERS AND SYMBOLS
② - THERMOPLASTIC PAVEMENT MARKING - LINE 4"
③ - THERMOPLASTIC PAVEMENT MARKING - LINE 12"
④ - THERMOPLASTIC PAVEMENT MARKING - LINE 24"

Ⓐ - DENOTES STANDARD SIGN PANELS (SEE NOTE 1)
(N-1) - DENOTES NON-STANDARD SIGN PANELS (SEE NOTE 1)

EXISTING SIGN TO BE REMOVED

⑤ - PREFORMED PLASTIC PAVEMENT MARKING, TYPE B - LETTERS AND SYMBOLS
⑥ - PREFORMED PLASTIC PAVEMENT MARKING, TYPE B - LINE 4"
⑦ - PREFORMED PLASTIC PAVEMENT MARKING, TYPE B - LINE 8"
⑧ - PREFORMED PLASTIC PAVEMENT MARKING, TYPE B - LINE 12"
⑨ - PREFORMED PLASTIC PAVEMENT MARKING, TYPE B - LINE 24"
⑩ - RAISED REFLECTIVE PAVEMENT MARKERS

PROPOSED SIGNS

NOTES:

1. FOR PROPOSED SIGN PANEL LAYOUT AND DIMENSIONS, SEE SIGN PANEL DETAILS.
2. PROPOSED SIGN OFFSET IS MEASURED FROM CENTERLINE OF SPECIFIED ROAD TO THE SIGN CENTER UNLESS OTHERWISE NOTED.
3. FOR A SUMMARY OF SIGN REMOVALS, SEE REMOVAL SCHEDULES.
4. SIGNING PLAN FOR NORTH FRONTAGE ROAD AND MAIN ST NORTH IS COVERED ON PM-13 (TOP).
5. NO PROPOSED SIGNS FOR AREA SHOWN BELOW.

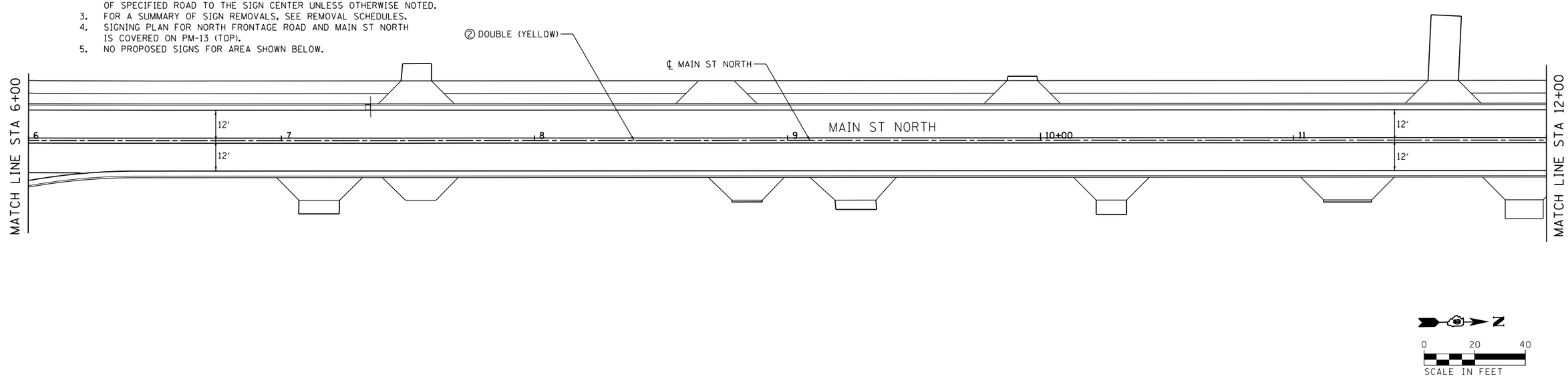

FILE NAME = c:\pw_work\pwidot\lavenderba\d0363618\D78221-sht-pmk-24.dgn	USER NAME = $USER$	DESIGNED - KN	REVISED -	STATE OF ILLINOIS DEPARTMENT OF TRANSPORTATION	PAVEMENT MARKING AND SIGNING PLANS MAIN STREET NORTH	F.A.P. RTE.	SECTION	COUNTY	TOTAL SHEETS / SHEET NO.
	PLOT SCALE = 40.0000 ' / in.	DRAWN - AS	REVISED -			331	(1-3)R-2, N-4, TS-4, HBK-1	WILLIAMSON	733 / 335
	PLOT DATE = 1/31/2014	CHECKED -	REVISED -			DRAWING NO. PM-24		CONTRACT NO. 78221	
		DATE -	REVISED -		SCALE: SHEET NO. 24 OF 28 SHEETS STA. 0+00 TO STA. 12+00			ILLINOIS FED. AID PROJECT	

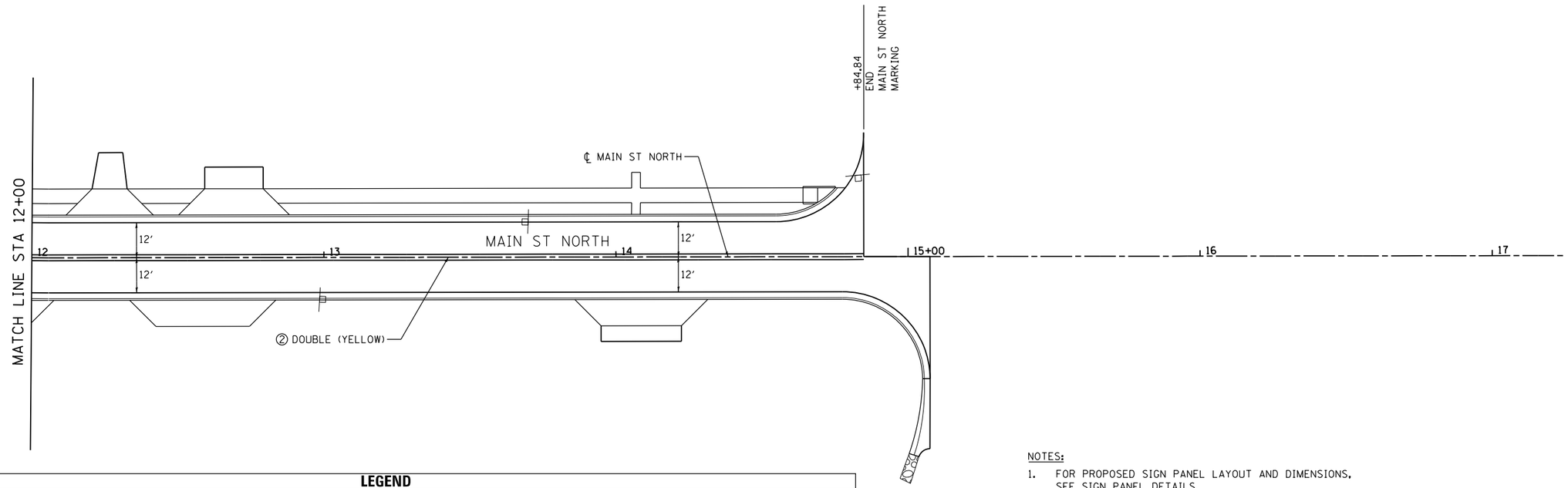

LEGEND

① - THERMOPLASTIC PAVEMENT MARKING - LETTERS AND SYMBOLS
② - THERMOPLASTIC PAVEMENT MARKING - LINE 4"
③ - THERMOPLASTIC PAVEMENT MARKING - LINE 12"
④ - THERMOPLASTIC PAVEMENT MARKING - LINE 24"

Ⓐ - DENOTES STANDARD SIGN PANELS (SEE NOTE 1)
(N-1) - DENOTES NON-STANDARD SIGN PANELS (SEE NOTE 1)

EXISTING SIGN TO BE REMOVED

⑤ - PREFORMED PLASTIC PAVEMENT MARKING, TYPE B - LETTERS AND SYMBOLS
⑥ - PREFORMED PLASTIC PAVEMENT MARKING, TYPE B - LINE 4"
⑦ - PREFORMED PLASTIC PAVEMENT MARKING, TYPE B - LINE 8"
⑧ - PREFORMED PLASTIC PAVEMENT MARKING, TYPE B - LINE 12"
⑨ - PREFORMED PLASTIC PAVEMENT MARKING, TYPE B - LINE 24"
⑩ - RAISED REFLECTIVE PAVEMENT MARKERS

PROPOSED SIGNS

NOTES:

1. FOR PROPOSED SIGN PANEL LAYOUT AND DIMENSIONS, SEE SIGN PANEL DETAILS.
2. PROPOSED SIGN OFFSET IS MEASURED FROM CENTERLINE OF SPECIFIED ROAD TO THE SIGN CENTER UNLESS OTHERWISE NOTED.
3. FOR A SUMMARY OF SIGN REMOVALS, SEE REMOVAL SCHEDULES.
4. NO PROPOSED SIGNS FOR AREA SHOWN ABOVE.

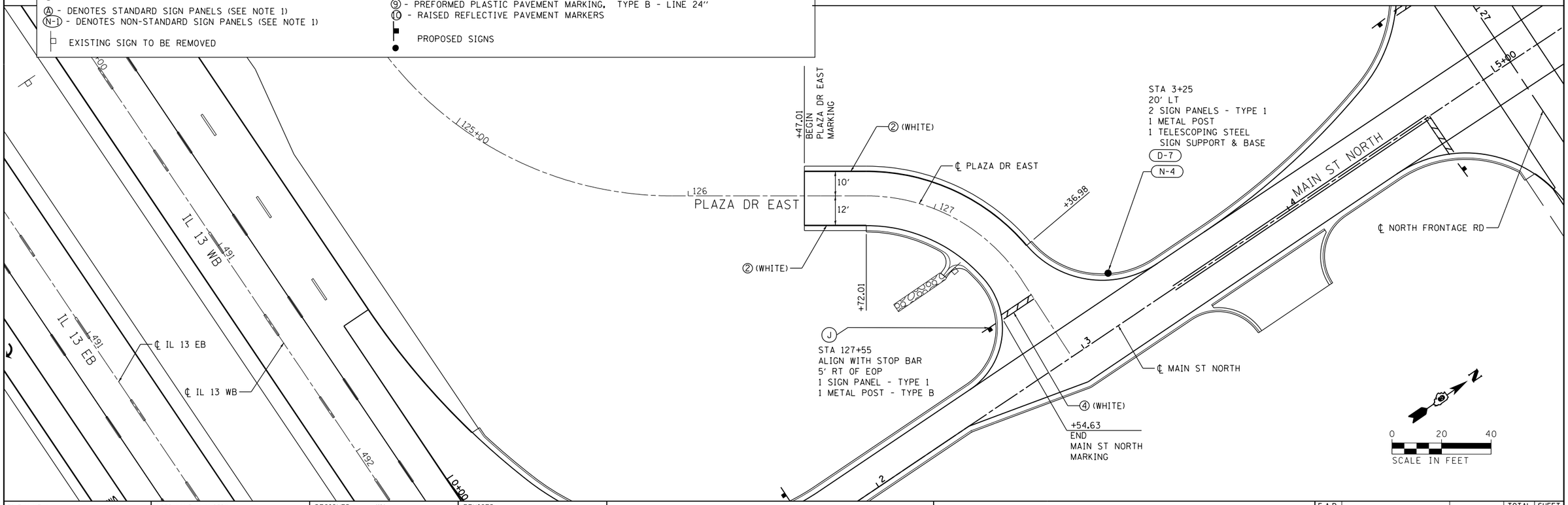

FILE NAME = c:\pw_work\pwidot\lavenderba\d0363618\D78221-sht-pmk-25.dgn	USER NAME = $USER$	DESIGNED - KN	REVISED -
		DRAWN - AS	REVISED -
	PLOT SCALE = 40.0000 ' / in.	CHECKED -	REVISED -
	PLOT DATE = 1/31/2014	DATE -	REVISED -

STATE OF ILLINOIS
DEPARTMENT OF TRANSPORTATION

PAVEMENT MARKING AND SIGNING PLANS
MAIN STREET NORTH / PLAZA DRIVE EAST

SCALE: | SHEET NO. 25 OF 28 SHEETS | STA. 12+00 TO STA. 15+07.50

F.A.P. RTE.	SECTION	COUNTY	TOTAL SHEETS	SHEET NO.
331	(1-3)R-2, N-4, TS-4, HBK-1	WILLIAMSON	733	336
DRAWING NO.	PM-25	CONTRACT NO. 78221		
		ILLINOIS FED. AID PROJECT		

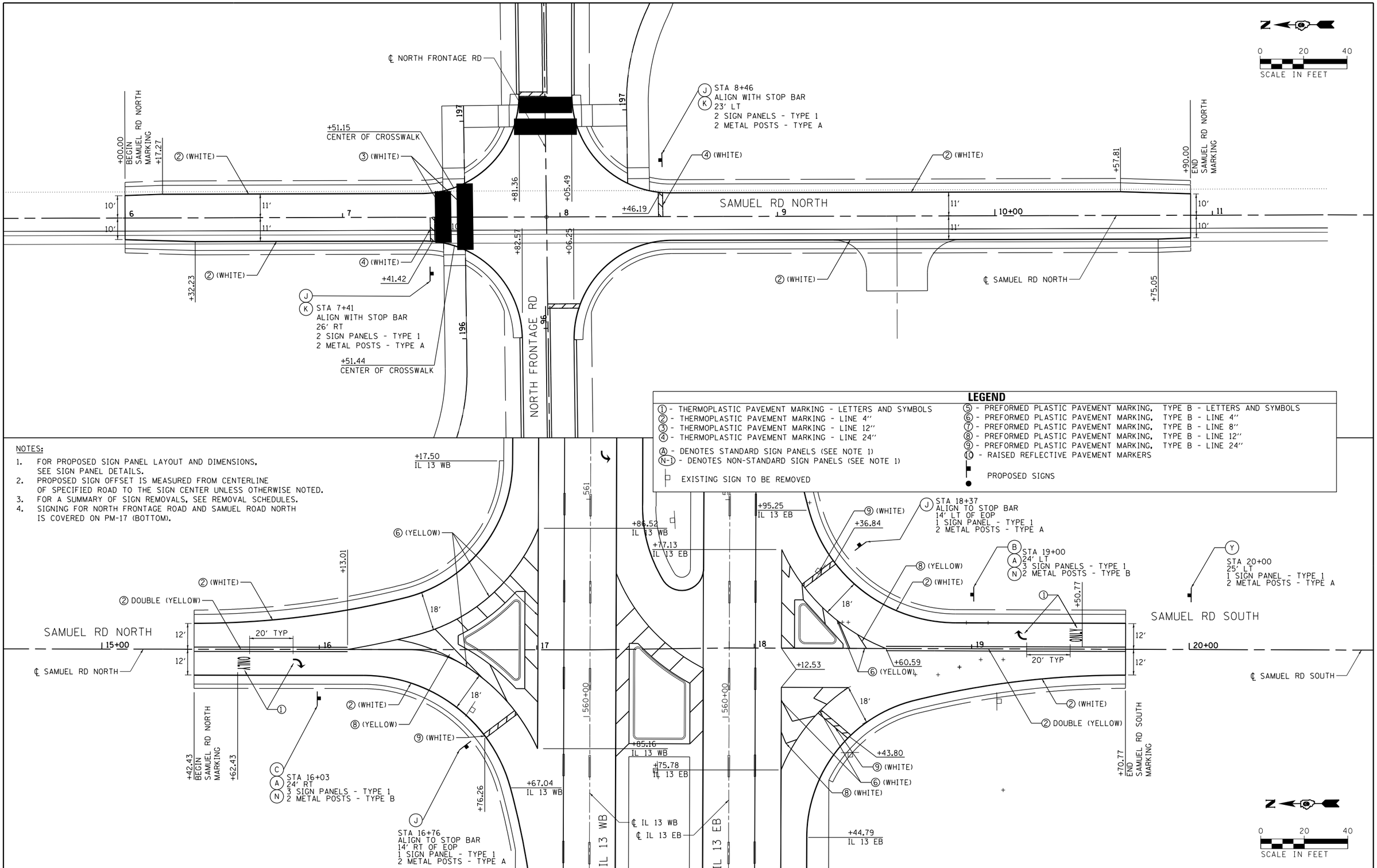

LEGEND

① - THERMOPLASTIC PAVEMENT MARKING - LETTERS AND SYMBOLS
② - THERMOPLASTIC PAVEMENT MARKING - LINE 4"
③ - THERMOPLASTIC PAVEMENT MARKING - LINE 12"
④ - THERMOPLASTIC PAVEMENT MARKING - LINE 24"

Ⓐ - DENOTES STANDARD SIGN PANELS (SEE NOTE 1)
(N-1) - DENOTES NON-STANDARD SIGN PANELS (SEE NOTE 1)

EXISTING SIGN TO BE REMOVED

⑤ - PREFORMED PLASTIC PAVEMENT MARKING, TYPE B - LETTERS AND SYMBOLS
⑥ - PREFORMED PLASTIC PAVEMENT MARKING, TYPE B - LINE 4"
⑦ - PREFORMED PLASTIC PAVEMENT MARKING, TYPE B - LINE 8"
⑧ - PREFORMED PLASTIC PAVEMENT MARKING, TYPE B - LINE 12"
⑨ - PREFORMED PLASTIC PAVEMENT MARKING, TYPE B - LINE 24"
⑩ - RAISED REFLECTIVE PAVEMENT MARKERS

PROPOSED SIGNS

NOTES:

1. FOR PROPOSED SIGN PANEL LAYOUT AND DIMENSIONS, SEE SIGN PANEL DETAILS.
2. PROPOSED SIGN OFFSET IS MEASURED FROM CENTERLINE OF SPECIFIED ROAD TO THE SIGN CENTER UNLESS OTHERWISE NOTED.
3. FOR A SUMMARY OF SIGN REMOVALS, SEE REMOVAL SCHEDULES.
4. SIGNING FOR NORTH FRONTAGE ROAD AND SAMUEL ROAD NORTH IS COVERED ON PM-17 (BOTTOM).

FILE NAME = c:\pw_work\pwidot\lavenderba\d0363618\D78221-sht-pmk-26.dgn	USER NAME = $USER$	DESIGNED - KN	REVISED -
		DRAWN - AS	REVISED -
	PLOT SCALE = 40.0000 ' / in.	CHECKED -	REVISED -
	PLOT DATE = 1/31/2014	DATE -	REVISED -

STATE OF ILLINOIS
DEPARTMENT OF TRANSPORTATION

PAVEMENT MARKING AND SIGNING PLANS
SAMUEL ROAD AND NORTH FRONTAGE RD / IL 13

SCALE: | SHEET NO. 26 OF 28 SHEETS | STA. | TO STA.

F.A.P. RTE.	SECTION	COUNTY	TOTAL SHEETS	SHEET NO.
331	(1-3)R-2, N-4, TS-4, HBK-1	WILLIAMSON	733	337
DRAWING NO.	PM-26	CONTRACT NO. 78221		
		ILLINOIS FED. AID PROJECT		

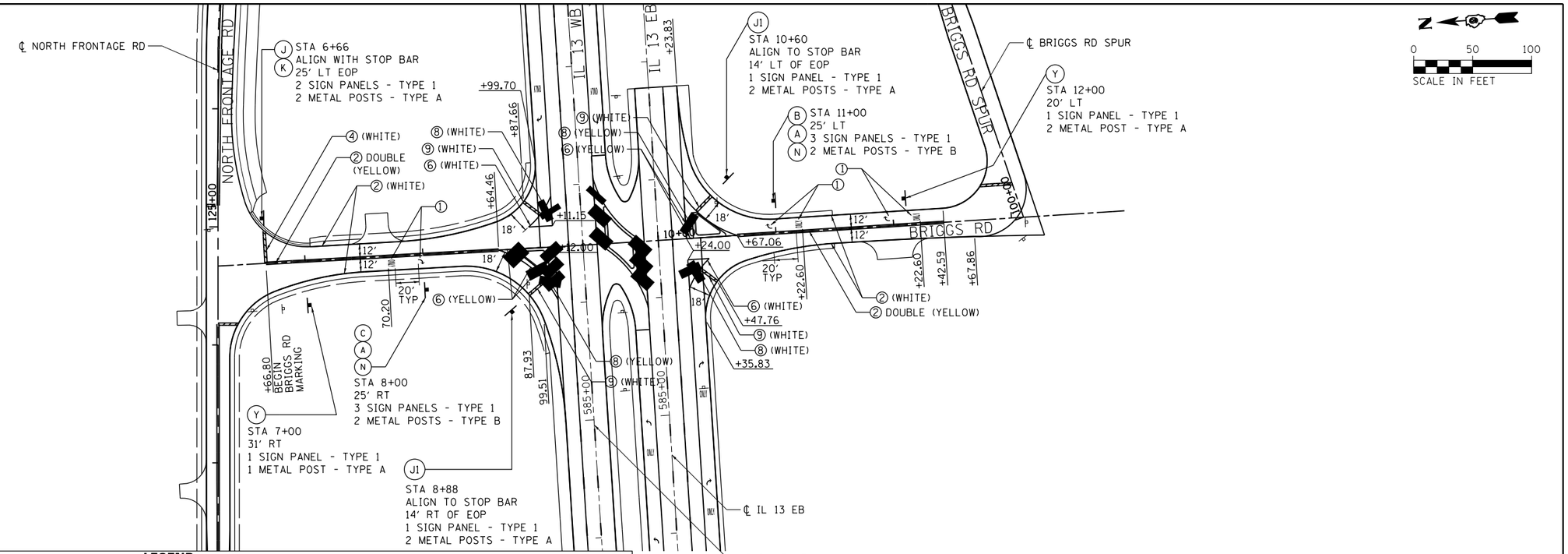

LEGEND

1 - THERMOPLASTIC PAVEMENT MARKING - LETTERS AND SYMBOLS
2 - THERMOPLASTIC PAVEMENT MARKING - LINE 4"
3 - THERMOPLASTIC PAVEMENT MARKING - LINE 12"
4 - THERMOPLASTIC PAVEMENT MARKING - LINE 24"

A - DENOTES STANDARD SIGN PANELS (SEE NOTE 1)
N-1 - DENOTES NON-STANDARD SIGN PANELS (SEE NOTE 1)

5 - PREFORMED PLASTIC PAVEMENT MARKING, TYPE B - LETTERS AND SYMBOLS
6 - PREFORMED PLASTIC PAVEMENT MARKING, TYPE B - LINE 4"
7 - PREFORMED PLASTIC PAVEMENT MARKING, TYPE B - LINE 8"
8 - PREFORMED PLASTIC PAVEMENT MARKING, TYPE B - LINE 12"
9 - PREFORMED PLASTIC PAVEMENT MARKING, TYPE B - LINE 24"
10 - RAISED REFLECTIVE PAVEMENT MARKERS

PROPOSED SIGNS

NOTES:

1. FOR PROPOSED SIGN PANEL LAYOUT AND DIMENSIONS, SEE SIGN PANEL DETAILS.
2. PROPOSED SIGN OFFSET IS MEASURED FROM CENTERLINE OF SPECIFIED ROAD TO THE SIGN CENTER UNLESS OTHERWISE NOTED.
3. FOR A SUMMARY OF SIGN REMOVALS, SEE REMOVAL SCHEDULES.
4. DOUBLE YELLOW CENTERLINE PAVEMENT MARKING DETAIL WITH PC, PT AND RADIUS SHALL BE PLACED AT A SPLIT OF PAVEMENT EDGES.
5. SIGNING FOR IL-13 AND BRIGGS ROAD FROM STA 7+50 TO STA 12+00 IS COVERED ON PM-04 (BOTTOM).
6. SIGNING FOR NORTH FRONTAGE ROAD AT BRIGGS ROAD IS COVERED ON PM-19 (BOTTOM) AND PM-20 (TOP).

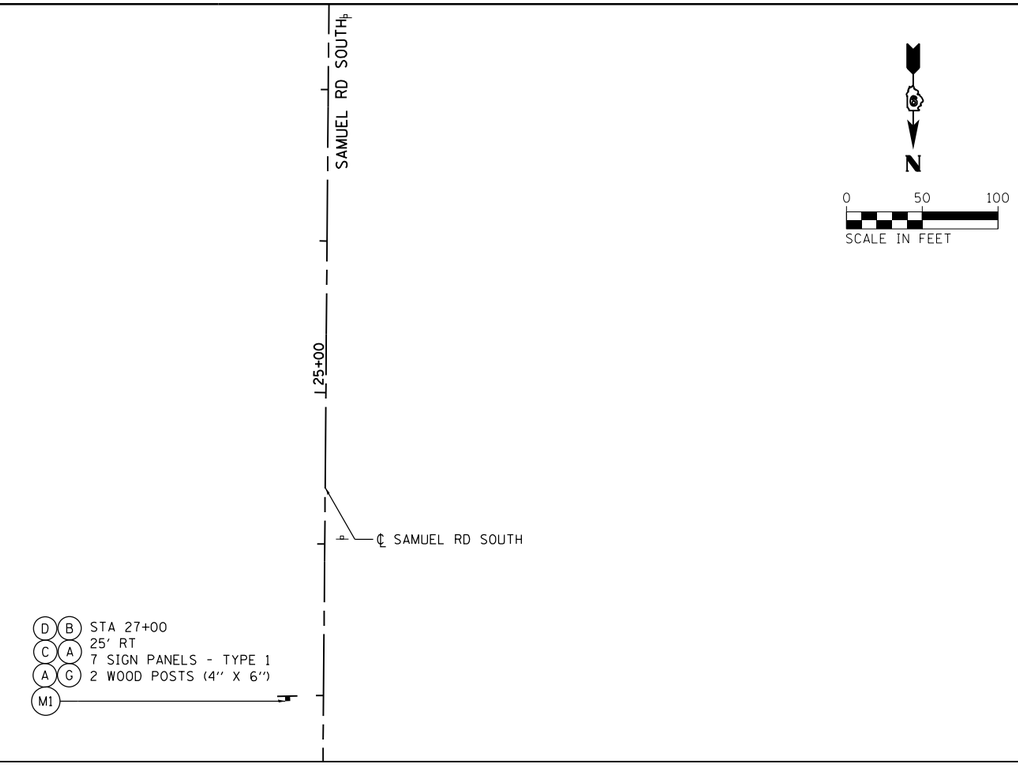

LEGEND

1 - THERMOPLASTIC PAVEMENT MARKING - LETTERS AND SYMBOLS
2 - THERMOPLASTIC PAVEMENT MARKING - LINE 4"
3 - THERMOPLASTIC PAVEMENT MARKING - LINE 12"
4 - THERMOPLASTIC PAVEMENT MARKING - LINE 24"

A - DENOTES STANDARD SIGN PANELS (SEE NOTE 1)
N-1 - DENOTES NON-STANDARD SIGN PANELS (SEE NOTE 1)

EXISTING SIGN TO BE REMOVED

5 - PREFORMED PLASTIC PAVEMENT MARKING, TYPE B - LETTERS AND SYMBOLS
6 - PREFORMED PLASTIC PAVEMENT MARKING, TYPE B - LINE 4"
7 - PREFORMED PLASTIC PAVEMENT MARKING, TYPE B - LINE 8"
8 - PREFORMED PLASTIC PAVEMENT MARKING, TYPE B - LINE 12"
9 - PREFORMED PLASTIC PAVEMENT MARKING, TYPE B - LINE 24"
10 - RAISED REFLECTIVE PAVEMENT MARKERS

PROPOSED SIGNS

NOTES:

1. FOR PROPOSED SIGN PANEL LAYOUT AND DIMENSIONS, SEE SIGN PANEL DETAILS.
2. PROPOSED SIGN OFFSET IS MEASURED FROM CENTERLINE OF SPECIFIED ROAD TO THE SIGN CENTER UNLESS OTHERWISE NOTED.
3. FOR A SUMMARY OF SIGN REMOVALS, SEE REMOVAL SCHEDULES.
4. SIGNING FOR BRIGGS ROAD SPUR AND BRIGGS ROAD IS COVERED ON PM-27 (BOTTOM).

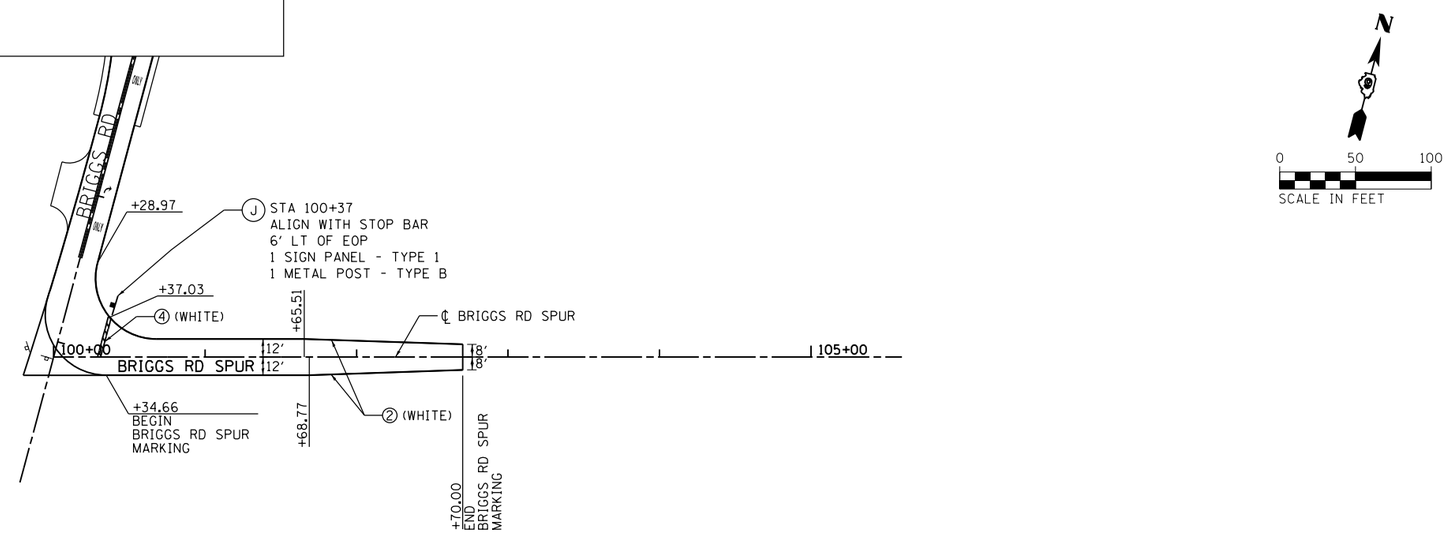

FILE NAME = c:\pw_work\pwidot\lavenderba\d0363618\D178221-sht-pmk-28.dgn	USER NAME = $USER$	DESIGNED - KN	REVISED -
		DRAWN - AS	REVISED -
	PLOT SCALE = 100.0000 ' / in.	CHECKED -	REVISED -
	PLOT DATE = 1/31/2014	DATE -	REVISED -

STATE OF ILLINOIS
DEPARTMENT OF TRANSPORTATION

PAVEMENT MARKING AND SIGNING PLANS
SAMUEL ROAD SOUTH /BRIGGS ROAD SPUR

SCALE: | SHEET NO. 28 OF 28 SHEETS | STA. | TO STA.

F.A.P. RTE.	SECTION	COUNTY	TOTAL SHEETS	SHEET NO.
331	(1-3)R-2, N-4, TS-4, HBK-1	WILLIAMSON	733	339
DRAWING NO. PM-28		CONTRACT NO. 78221		
		ILLINOIS FED. AID PROJECT		

M1-I100
24'' X 24''
(A)

M3-2
24'' X 12''
(B)

M3-4
24'' X 12''
(C)

M4-5
24'' X 12''
(D)

M6-3
21'' X 15''
(G)

R2-1
24'' X 30''
(H)

R2-1
24'' X 30''
(H1)

R2-1
24'' X 30''
(H2)

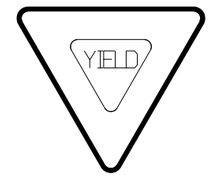

R1-2
36'' X 36'' X 36''
(I)

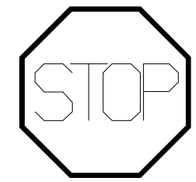

R1-1
30'' X 30''
(J)

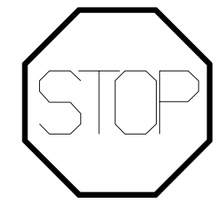

R1-1
36'' X 36''
(J1)

R1-3P
18'' X 6''
(K)

R10-I100
30'' X 18''
(L1)

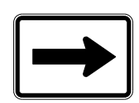

M6-1(R)
21'' X 15''
(M)

M6-1(L)
21'' X 15''
(M1)

M6-2
21'' X 15''
(N)

W3-1
30'' X 30''
(P)

FILE NAME = c:\pw_work\pwidot\lavenderba\d0363618\D78221-sht-sg-01.dgn	USER NAME = $USER$	DESIGNED - KN	REVISED -
		DRAWN - AS	REVISED -
	PLOT SCALE = 40.0000 ' / in.	CHECKED -	REVISED -
	PLOT DATE = 1/31/2014	DATE -	REVISED -

STATE OF ILLINOIS
DEPARTMENT OF TRANSPORTATION

SIGN PANEL DETAILS
STANDARD SIGNS

SCALE: | SHEET NO. 1 OF 8 SHEETS | STA. | TO STA.

F.A.P. RTE.	SECTION	COUNTY	TOTAL SHEETS	SHEET NO.
331	(1-3)R-2, N-4, TS-4, HBK-1	WILLIAMSON	733	340
DRAWING NO.	SI-01	CONTRACT NO. 78221		
		ILLINOIS FED. AID PROJECT		

D11-1
18'' X 18''
(S)

W1-4(R)
36'' X 36''
(T)

W1-4(L)
36'' X 36''
(T1)

W1-2(L)
36'' X 36''
(T2)

W1-2(R)
36'' X 36''
(T3)

R5-1
30'' X 30''
(W)

R5-1a
36'' X 24''
(X)

R3-5(R)
30'' X 36''
(Y)

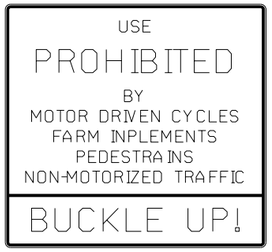

R5-I100
48'' X 54''
(Z)

FILE NAME = c:\pw_work\pwidot\lavenderba\d0363618\D78221-sht-sg-02.dgn	USER NAME = $USER$	DESIGNED - KN	REVISED -
		DRAWN - AS	REVISED -
	PLOT SCALE = 40.0000 ' / in.	CHECKED -	REVISED -
	PLOT DATE = 1/31/2014	DATE -	REVISED -

STATE OF ILLINOIS
DEPARTMENT OF TRANSPORTATION

SIGN PANEL DETAILS
STANDARD SIGNS

SCALE: | SHEET NO. 2 OF 8 SHEETS | STA. | TO STA.

F.A.P. RTE.	SECTION	COUNTY	TOTAL SHEETS	SHEET NO.
331	(1-3)R-2, N-4, TS-4, HBK-1	WILLIAMSON	733	341
DRAWING NO. SI-02		CONTRACT NO. 78221		
		ILLINOIS FED. AID PROJECT		

D-7

No border, White on Green;
[Plaza Dr] ClearviewHwy-1-W;
Table of letter and object lefts.

P	l	a	z	a	D	r
4.2	6.8	8.3	10.9	12.9	16.8	19.0

N-1

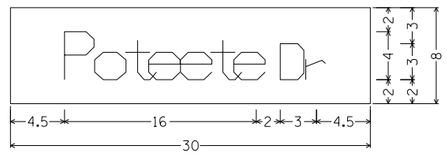

No border, White on Green;
[Poteete Dr] ClearviewHwy-1-W;
Table of letter and object lefts.

P	o	t	e	e	t	e	D	r	
4.5	7.0	9.6	11.5	14.2	16.7	18.6	22.5	24.6	

N-4

No border, White on Green;
[Main St] ClearviewHwy-1-W;
Table of letter and object lefts.

M	a	i	n	S	t	
5.0	8.1	10.8	12.4	16.3	18.1	

N-5

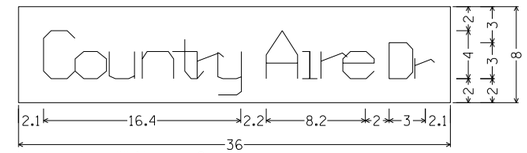

No border, White on Green;
[Country Aire Dr] ClearviewHwy-1-W;
Table of letter and object lefts.

C	o	u	n	t	r	y	A	i	r	e	D	r		
2.1	4.7	7.6	10.3	12.8	14.9	16.6	20.7	23.6	25.2	27.0	30.9	33.0		

N-6

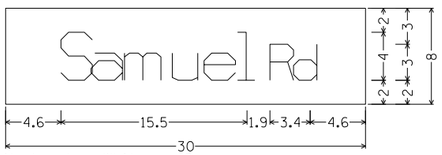

No border, White on Green;
[Samuel Rd] ClearviewHwy-1-W;
Table of letter and object lefts.

S	a	m	u	e	l	R	d
4.6	7.1	9.9	13.9	16.5	19.3	22.0	24.0

N-7

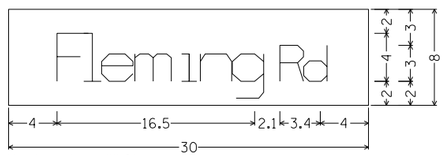

No border, White on Green;
[Fleming Rd] ClearviewHwy-1-W;
Table of letter and object lefts.

F	l	e	m	i	n	g	R	d	
4.0	6.3	7.8	10.5	14.4	16.0	18.6	22.6	24.6	

N-8

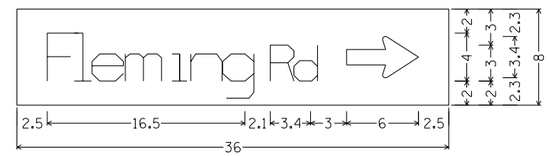

No border, White on Green;
[Fleming Rd] ClearviewHwy-1-W;
Standard Arrow Custom 6.0" X 3.4" OL;
Table of letter and object lefts.

F	l	e	m	i	n	g	R	d	⇨
2.5	4.8	6.3	9.0	12.9	14.5	17.1	21.1	23.1	27.5

N-9

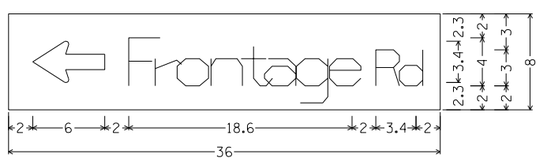

No border, White on Green;
Standard Arrow Custom 6.0" X 3.4" 180L;
[Frontage Rd] ClearviewHwy-1-W;
Table of letter and object lefts.

⇦	F	r	o	n	t	a	g	e	R	d	
2.0	10.0	12.2	14.1	16.9	19.4	21.3	24.0	26.8	30.6	32.6	

N-10

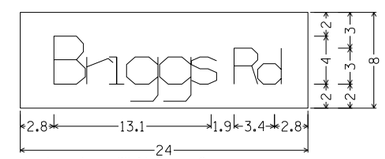

No border, White on Green;
[Briggs Rd] ClearviewHwy-1-W;
Table of letter and object lefts.

B	r	i	g	g	s	R	d	
2.8	5.5	7.4	8.9	11.6	14.3	17.8	19.8	

S-2

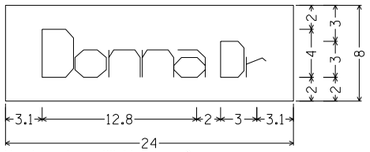

No border, White on Green;
[Donna Dr] ClearviewHwy-1-W;
Table of letter and object lefts.

D	o	n	n	a	D	r
3.1	5.8	8.6	11.4	14.0	17.9	20.1

S-3

No border, White on Green;
[Clark St] ClearviewHwy-1-W;
Table of letter and object lefts.

C	l	a	r	k	S	t
4.4	7.1	8.6	11.4	13.3	16.9	18.7

S-4

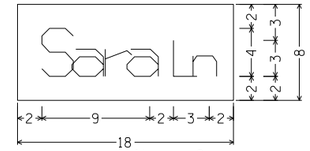

No border, White on Green;
[Sara Ln] ClearviewHwy-1-W;
Table of letter and object lefts.

S	a	r	a	L	n
2.0	4.5	7.3	9.1	13.0	14.6

W-1

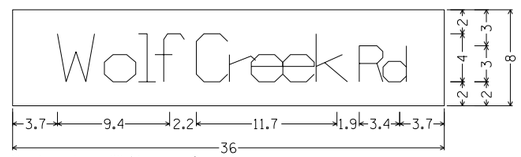

No border, White on Green;
[Wolf Creek Rd] ClearviewHwy-1-W;
Table of letter and object lefts.

W	o	l	f	C	r	e	e	k	R	d	
3.7	7.6	10.5	11.9	15.3	18.1	19.9	22.5	25.3	28.9	30.9	

N-11

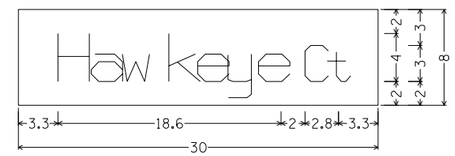

No border, White on Green;
[Hawkeye Ct] ClearviewHwy-1-W;
Table of letter and object lefts.

H	a	w	k	e	y	e	C	t	
3.3	6.1	8.7	12.6	14.9	17.5	20.0	23.9	25.7	

FILE NAME = c:\pw_work\pwidot\lavenderba\d0363618\D978221-sht-sg-04.dgn	USER NAME = $USER$	DESIGNED - KN	REVISED -
		DRAWN - AS	REVISED -
	PLOT SCALE = 40.0000 ' / in.	CHECKED -	REVISED -
	PLOT DATE = 1/31/2014	DATE -	REVISED -

STATE OF ILLINOIS
DEPARTMENT OF TRANSPORTATION

SIGN PANEL DETAILS
DETAIL SIGNS

SCALE: | SHEET NO. 4 OF 8 SHEETS | STA. | TO STA.

F.A.P. RTE.	SECTION	COUNTY	TOTAL SHEETS	SHEET NO.
331	(1-3)R-2, N-4, TS-4, HBK-1	WILLIAMSON	733	343
DRAWING NO.	SI-04	CONTRACT NO. 78221		
		ILLINOIS FED. AID PROJECT		

13-2

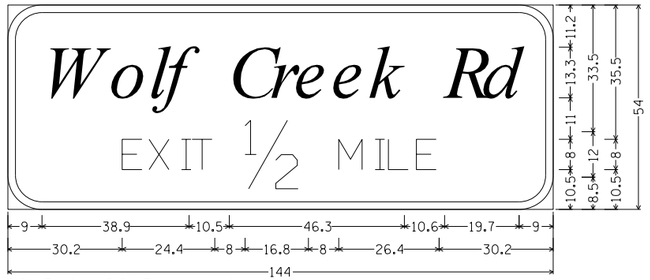

9.0″ Radius, 2.0″ Border, White on Green;
[Wolf Creek Rd] ClearviewHwy-5-W specified length;
[EXIT] E 2K [5 9/64] E Mod 2K [MILE] E 2K;
Table of letter and object lefts.

W	*o*	*l*	*f*	*C*	*r*	*e*	*e*	*k*	*R*	*d*
9.0	26.7	37.1	41.4	58.4	69.3	75.6	85.4	95.2	115.3	125.3

E	X	I	T	5 9/64	M	I	L	E
30.2	37.3	45.8	48.6	62.6	87.4	97.0	100.5	107.8

13-3

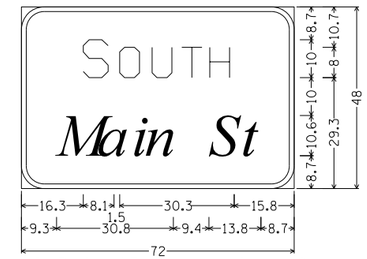

6.0″ Radius, 1.3″ Border, White on Green;
[SOUTH] E 2K;
[Main St] ClearviewHwy-5-W specified length;
Table of letter and object lefts.

S	O	U	T	H
16.3	25.9	34.5	42.3	49.7

M	*a*	*i*	*n*	*S*	*t*
9.3	20.1	29.0	32.6	49.5	57.9

13-4

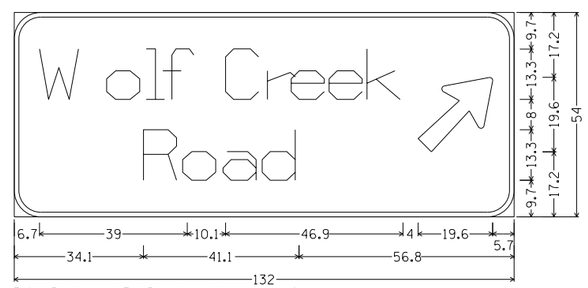

7.0″ Radius, 1.3″ Border, White on Green;
[Wolf Creek] ClearviewHwy-5-W-R specified length;
[Road] ClearviewHwy-5-W-R 13Ø spacing; Arrow 80 - 25.0″ 45∠;
Table of letter and object lefts.

W	o	l	f	C	r	e	e	k	⇗
6.7	24.4	34.9	39.2	55.8	66.9	73.2	83.2	93.2	106.7

R	o	a	d
34.1	44.5	55.2	65.5

FILE NAME = c:\pw_work\pwidot\lavenderba\d0363618\D78221-sht-sg-05.dgn	USER NAME = $USER$	DESIGNED - KN	REVISED -
		DRAWN - AS	REVISED -
	PLOT SCALE = 40.0000 ' / in.	CHECKED -	REVISED -
	PLOT DATE = 1/31/2014	DATE -	REVISED -

STATE OF ILLINOIS
DEPARTMENT OF TRANSPORTATION

SIGN PANEL DETAILS
DETAIL SIGNS

SCALE: | SHEET NO. 5 OF 8 SHEETS | STA. | TO STA.

F.A.P. RTE.	SECTION	COUNTY	TOTAL SHEETS	SHEET NO.
331	(1-3)R-2, N-4, TS-4, HBK-1	WILLIAMSON	733	344
DRAWING NO. SI-05		CONTRACT NO. 78221		
		ILLINOIS FED. AID PROJECT		

13-5

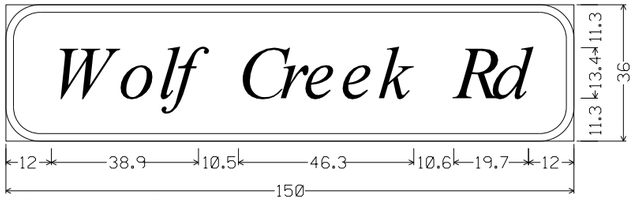

9.0" Radius, 2.0" Border, White on Green;
[Wolf Creek Rd] ClearviewHwy-5-W specified length;
Table of letter and object lefts.

W	*o*	*l*	*f*	*C*	*r*	*e*	*e*	*k*	*R*	*d*
12.0	29.7	40.1	44.4	61.4	72.3	78.6	88.4	98.2	118.3	128.3

13-6

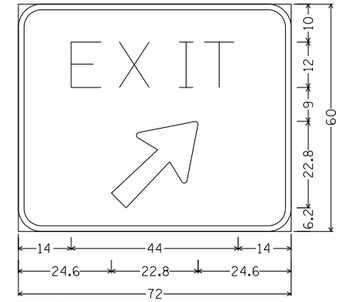

6.0" Radius, 1.5" Border, White on Green;
[EXIT] E 2K specified length;
Arrow Custom - 29.3" 45∠;
Table of letter and object lefts.

E	X	I	T
14.0	26.7	42.4	49.0

⇗
24.6

13-7

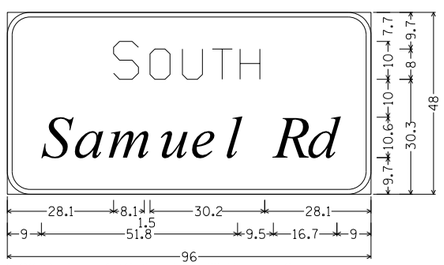

6.0" Radius, 1.3" Border, White on Green;
[SOUTH] E 2K;
[Samuel Rd] ClearviewHwy-5-W specified length;
Table of letter and object lefts.

S	O	U	T	H
28.1	37.7	46.3	54.1	61.5

S	*a*	*m*	*u*	*e*	*l*	*R*	*d*
9.0	17.6	26.6	39.9	48.4	57.3	70.3	79.2

13-8

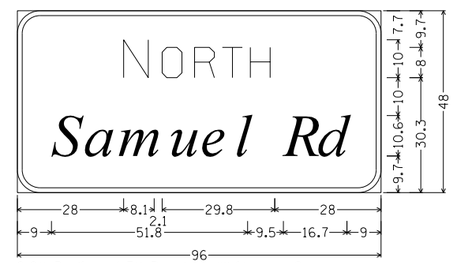

6.0" Radius, 1.3" Border, White on Green;
[NORTH] E 2K;
[Samuel Rd] ClearviewHwy-5-W specified length;
Table of letter and object lefts.

N	O	R	T	H
28.0	38.2	46.8	54.1	61.5

S	*a*	*m*	*u*	*e*	*l*	*R*	*d*
9.0	17.6	26.6	39.9	48.4	57.3	70.3	79.2

13-9

9.0" Radius, 2.0" Border, White on Green;
[Wolf Creek Rd] ClearviewHwy-5-W specified length;
[EXIT] E 2K [1] E Mod 2K [MILE] E 2K;
Table of letter and object lefts.

W	o	l	f	C	r	e	e	k	R	d
9.0	26.7	37.1	41.4	58.4	69.3	75.6	85.4	95.2	115.3	125.3

E	X	I	T	1	M	I	L	E
36.7	43.8	52.4	55.2	69.2	80.8	90.4	93.9	101.3

W-4

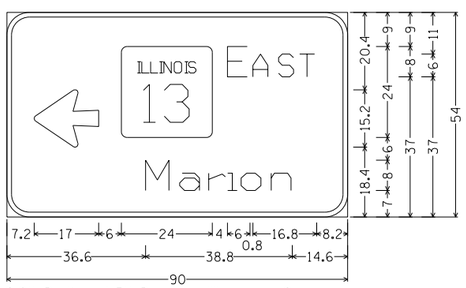

6.0" Radius, 1.3" Border, White on Green;
Arrow 80 - 17.0" 180∠; [EAST] E 2K;
[Marion] ClearviewHwy-5-W-R 80Ø spacing;
Table of letter and object lefts.

⇦	13	E	A	S	T
7.2	30.2	58.2	65.0	71.8	77.3

M	a	r	i	o	n
36.6	45.6	53.3	58.3	61.8	69.8

W-5

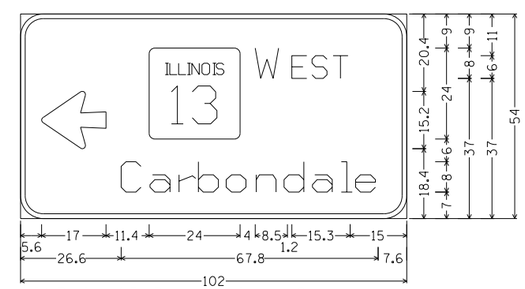

6.0" Radius, 1.3" Border, White on Green;
Arrow 80 - 17.0" 180∠; [WEST] E 2K;
[Carbondale] ClearviewHwy-5-W-R 80Ø spacing;
Table of letter and object lefts.

⇦	13	W	E	S	T
5.6	34.0	62.0	71.7	77.0	82.5

C	a	r	b	o	n	d	a	l	e
26.6	34.2	41.8	47.0	54.3	62.3	69.6	77.1	84.7	88.5

W-2

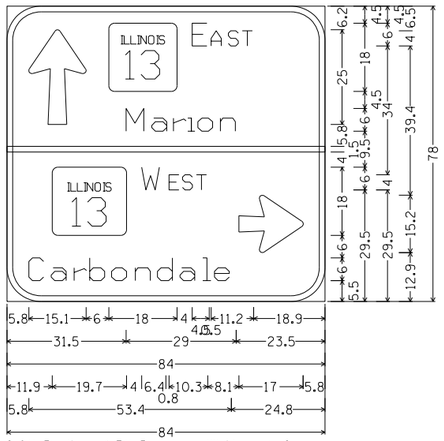

9.0" Radius, 1.5" Border, White on Green;
Arrow 80 - 25.0" 90∠;
Rounded Rectangle 1.5" Radius;
[EAST] E 2K;
[Marion] ClearviewHwy-5-W-R 80Ø spacing;
Rounded Rectangle 1.5" Radius;
[WEST] E 2K; [Carbondale] ClearviewHwy-5-W-R;
Arrow 80 - 17.0" 0∠;
Table of letter and object lefts.

⇧ 5.8	□ 26.9	E 48.9	A 53.9	S 58.5	T 62.1

M 31.5	a 38.3	r 44.0	i 47.7	o 50.4	n 56.4

— -0.0

□ 11.9	W 35.6	E 42.8	S 46.4	T 50.1	⇨ 61.2

C 5.8	a 11.7	r 17.7	b 21.9	o 27.6	n 33.9	d 39.8	a 45.7	l 51.7	e 54.8

W-3

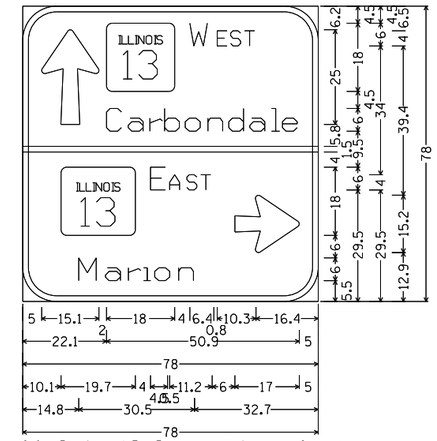

9.0" Radius, 1.5" Border, White on Green;
Arrow 80 - 25.0" 90∠;
Rounded Rectangle 1.5" Radius;
[WEST] E 2K;
[Carbondale] ClearviewHwy-5-W-R 80Ø spacing;
Rounded Rectangle 1.5" Radius;
[EAST] E 2K; [Marion] ClearviewHwy-5-W-R;
Arrow 80 - 17.0" 0∠;
Table of letter and object lefts.

⇧ 5.0	□ 22.1	W 44.1	E 51.3	S 54.9	T 58.6

C 22.1	a 27.9	r 33.6	b 37.4	o 42.9	n 48.9	d 54.4	a 60.0	l 65.7	e 68.6

— -0.0

□ 10.1	E 33.8	A 38.8	S 43.3	T 47.0	⇨ 56.0

M 14.8	a 21.8	r 27.9	i 31.9	o 34.9	n 41.2

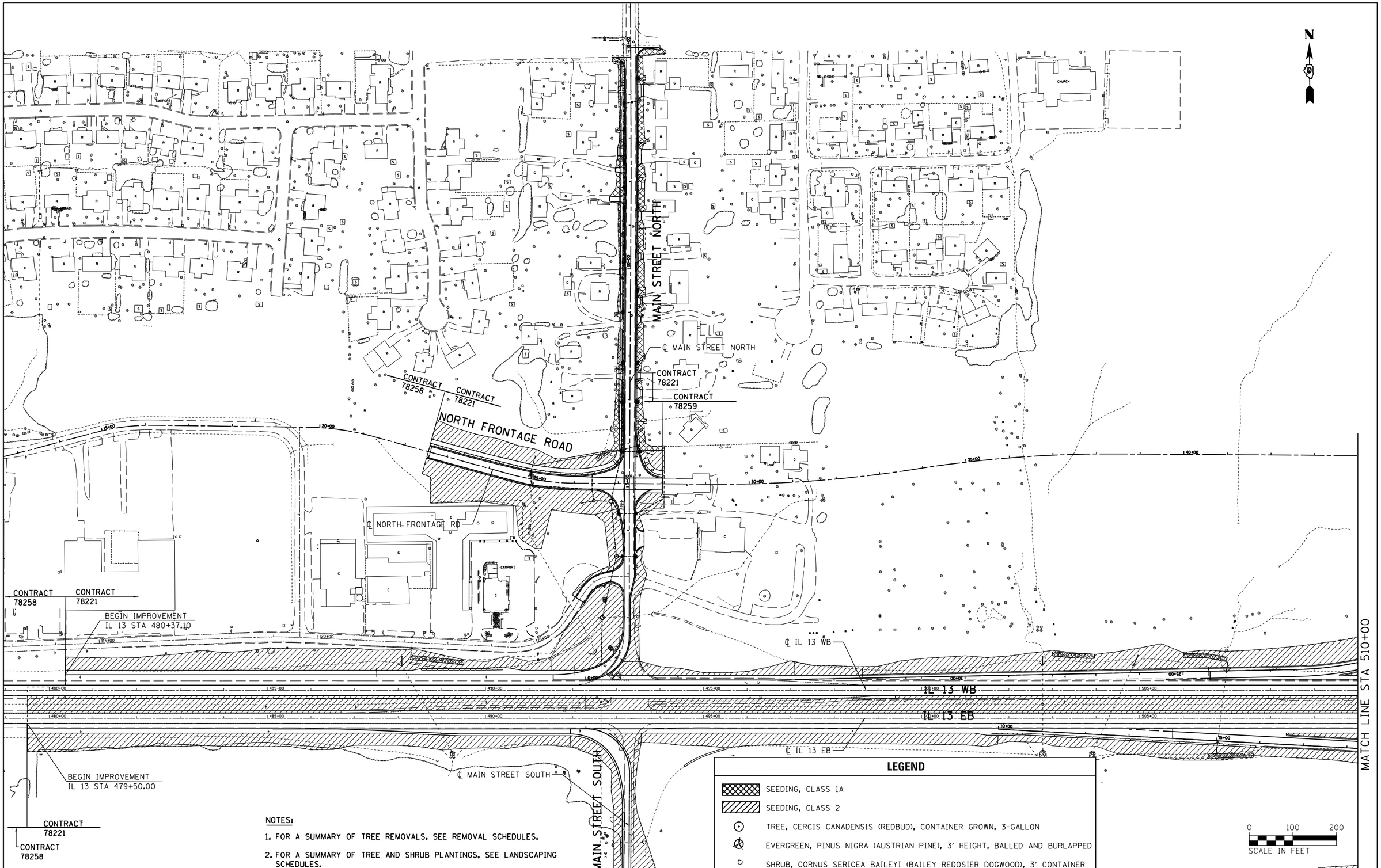

LEGEND

- SEEDING, CLASS 1A
- SEEDING, CLASS 2
- TREE, CERCIS CANADENSIS (REDBUD), CONTAINER GROWN, 3-GALLON
- EVERGREEN, PINUS NIGRA (AUSTRIAN PINE), 3' HEIGHT, BALLED AND BURLAPPED
- SHRUB, CORNUS SERICEA BAILEYI (BAILEY REDOSIER DOGWOOD), 3' CONTAINER

NOTES:

1. FOR A SUMMARY OF TREE REMOVALS, SEE REMOVAL SCHEDULES.
2. FOR A SUMMARY OF TREE AND SHRUB PLANTINGS, SEE LANDSCAPING SCHEDULES.

FILE NAME = c:\pw_work\pwidot\lavenderba\d0363618\D78221-sht-lndscp-01.dgn	USER NAME = $USER$	DESIGNED - KN	REVISED -
		DRAWN - AS	REVISED -
	PLOT SCALE = 200.0001 ' / in.	CHECKED -	REVISED -
	PLOT DATE = 1/31/2014	DATE -	REVISED -

STATE OF ILLINOIS
DEPARTMENT OF TRANSPORTATION

LANDSCAPING PLANS
IL 13

SCALE: | SHEET NO. 1 OF 5 SHEETS | STA. 479+50.00 TO STA. 510+00.00

F.A.P. RTE.	SECTION	COUNTY	TOTAL SHEETS	SHEET NO.
331	(1-3)R-2, N-4, TS-4, HBK-1	WILLIAMSON	733	348
DRAWING NO. LS-01		CONTRACT NO. 78221		
		ILLINOIS FED. AID PROJECT		

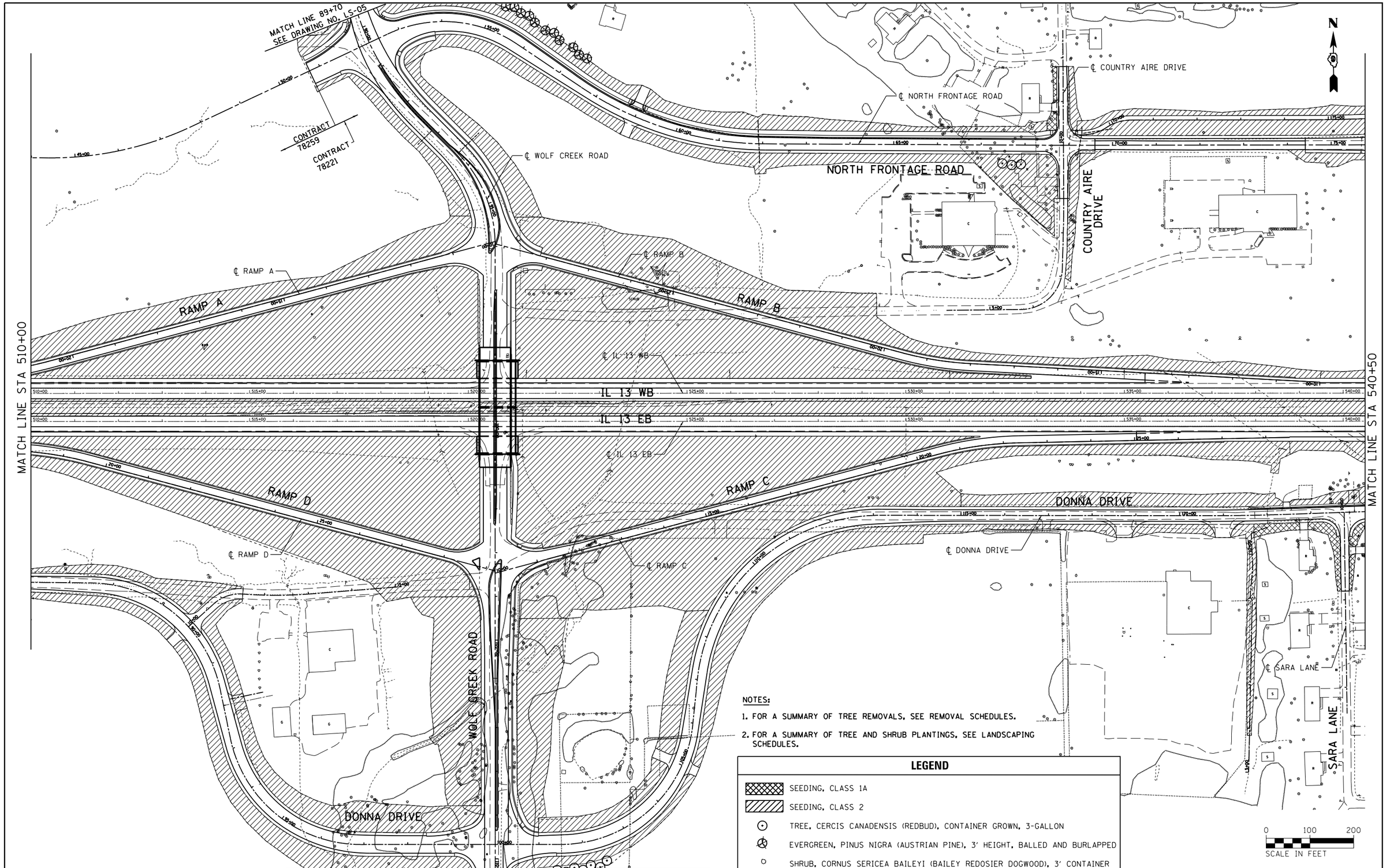

NOTES:

1. FOR A SUMMARY OF TREE REMOVALS, SEE REMOVAL SCHEDULES.
2. FOR A SUMMARY OF TREE AND SHRUB PLANTINGS, SEE LANDSCAPING SCHEDULES.

LEGEND

- SEEDING, CLASS 1A
- SEEDING, CLASS 2
- TREE, CERCIS CANADENSIS (REDBUD), CONTAINER GROWN, 3-GALLON
- EVERGREEN, PINUS NIGRA (AUSTRIAN PINE), 3' HEIGHT, BALLED AND BURLAPPED
- SHRUB, CORNUS SERICEA BAILEYI (BAILEY REDOSIER DOGWOOD), 3' CONTAINER

FILE NAME = c:\pw_work\pwidot\lavenderba\d0363618\D78221-sht-lndscp-02.dgn	USER NAME = $USER$	DESIGNED - KN	REVISED -
		DRAWN - AS	REVISED -
	PLOT SCALE = 200.0001 ' / in.	CHECKED -	REVISED -
	PLOT DATE = 1/31/2014	DATE -	REVISED -

STATE OF ILLINOIS
DEPARTMENT OF TRANSPORTATION

LANDSCAPING PLANS
IL 13

SCALE: | SHEET NO. 2 OF 5 SHEETS | STA. 510+00.00 TO STA. 540+50.00

F.A.P. RTE.	SECTION	COUNTY	TOTAL SHEETS	SHEET NO.
331	(1-3)R-2, N-4, TS-4, HBK-1	WILLIAMSON	733	349
DRAWING NO.	LS-02	CONTRACT NO. 78221		
		ILLINOIS FED. AID PROJECT		

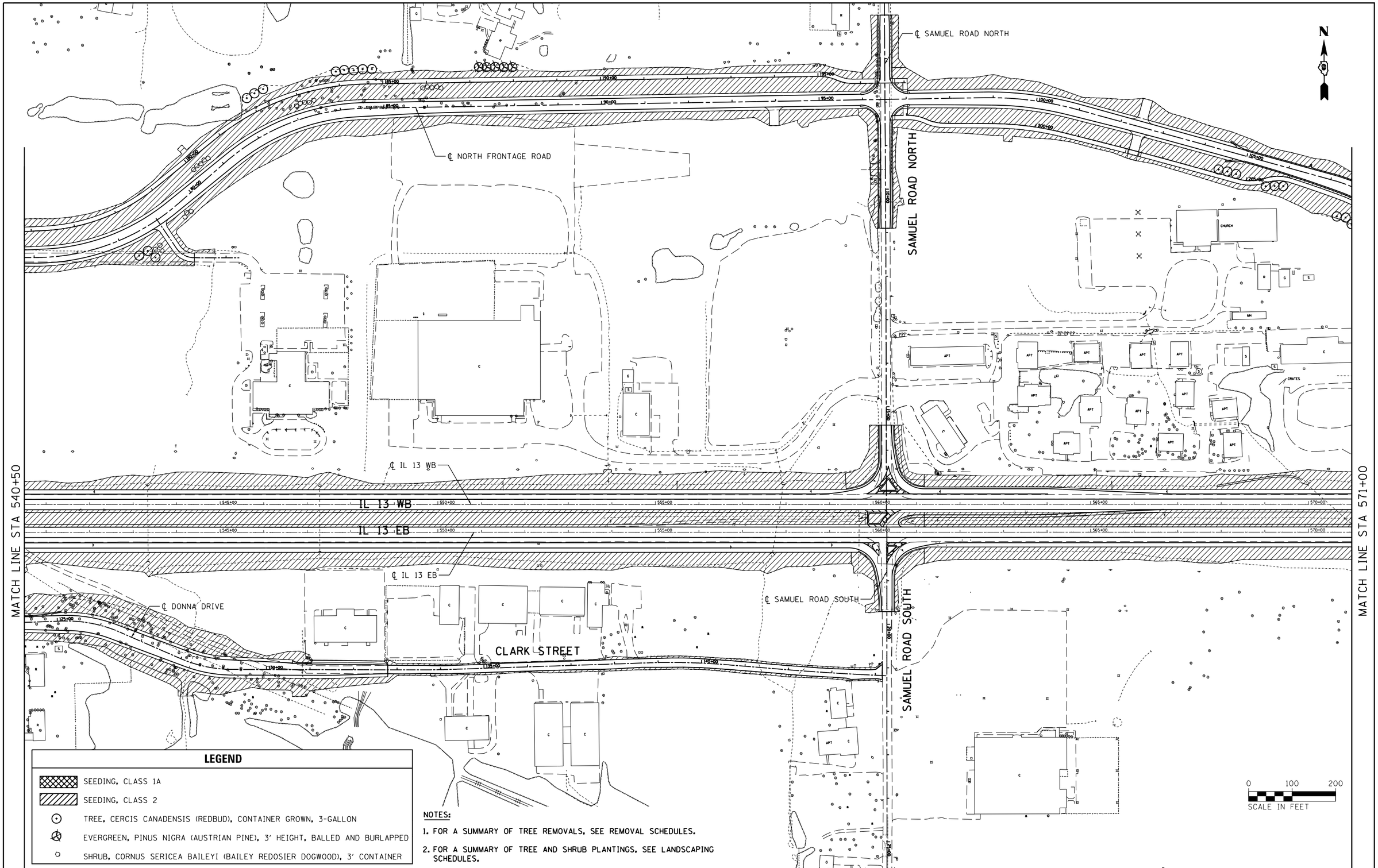

LEGEND

- SEEDING, CLASS 1A
- SEEDING, CLASS 2
- TREE, CERCIS CANADENSIS (REDBUD), CONTAINER GROWN, 3-GALLON
- EVERGREEN, PINUS NIGRA (AUSTRIAN PINE), 3' HEIGHT, BALLED AND BURLAPPED
- SHRUB, CORNUS SERICEA BAILEYI (BAILEY REDOSIER DOGWOOD), 3' CONTAINER

NOTES:

1. FOR A SUMMARY OF TREE REMOVALS, SEE REMOVAL SCHEDULES.
2. FOR A SUMMARY OF TREE AND SHRUB PLANTINGS, SEE LANDSCAPING SCHEDULES.

FILE NAME = c:\pw_work\pwidot\lavenderba\d0363618\D978221-sht-lndscp-03.dgn	USER NAME = $USER$	DESIGNED - KN	REVISED -
		DRAWN - AS	REVISED -
	PLOT SCALE = 200.0001 ' / in.	CHECKED -	REVISED -
	PLOT DATE = 1/31/2014	DATE -	REVISED -

STATE OF ILLINOIS
DEPARTMENT OF TRANSPORTATION

LANDSCAPING PLANS
IL 13

SCALE: | SHEET NO. 3 OF 5 SHEETS | STA. 540+50.00 TO STA. 571+00.00

F.A.P. RTE.	SECTION	COUNTY	TOTAL SHEETS	SHEET NO.
331	(1-3)R-2, N-4, TS-4, HBK-1	WILLIAMSON	733	350
DRAWING NO.	LS-03	CONTRACT NO. 78221		
		ILLINOIS FED. AID PROJECT		

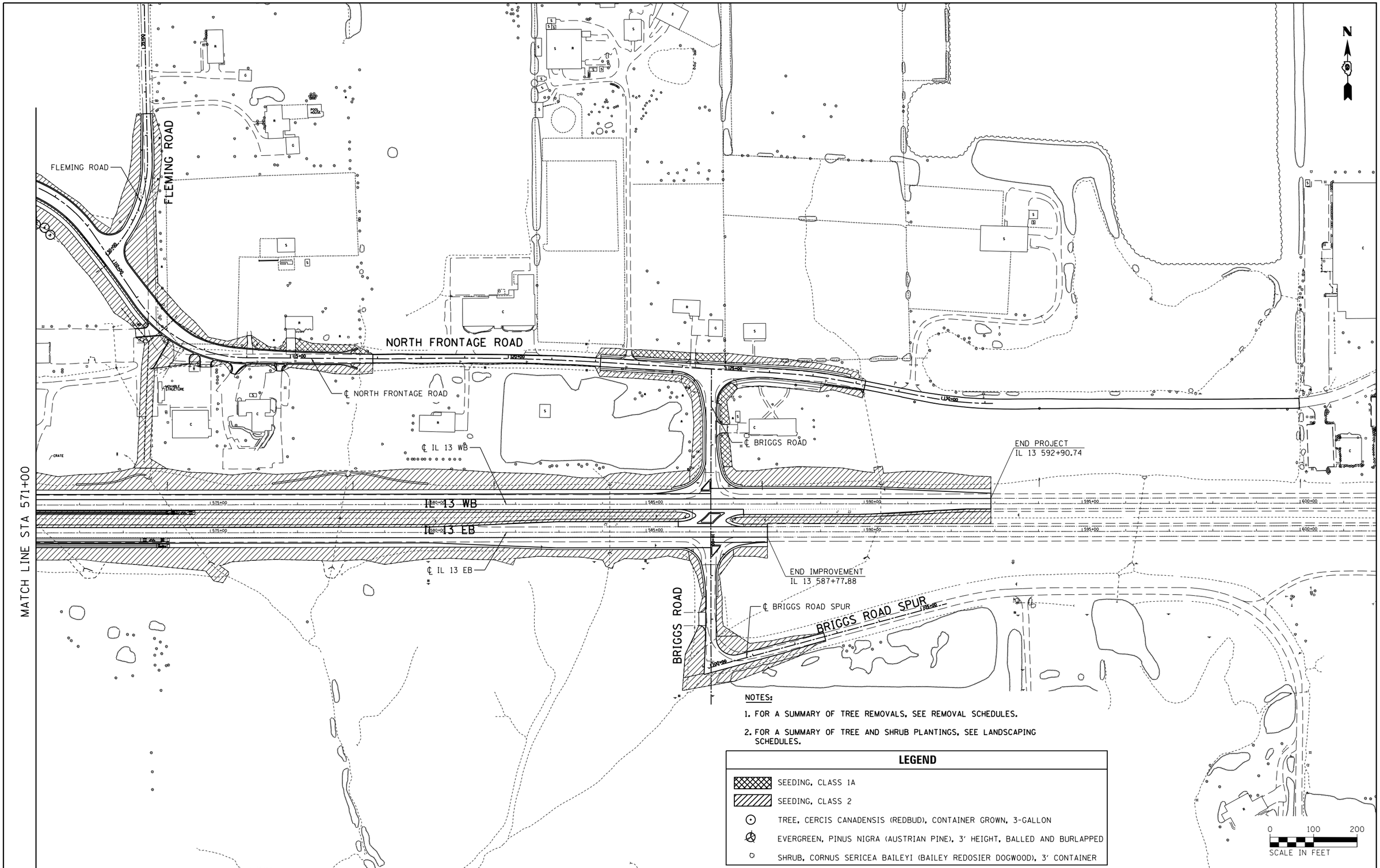

NOTES:

1. FOR A SUMMARY OF TREE REMOVALS, SEE REMOVAL SCHEDULES.
2. FOR A SUMMARY OF TREE AND SHRUB PLANTINGS, SEE LANDSCAPING SCHEDULES.

LEGEND

- SEEDING, CLASS 1A
- SEEDING, CLASS 2
- TREE, CERCIS CANADENSIS (REDBUD), CONTAINER GROWN, 3-GALLON
- EVERGREEN, PINUS NIGRA (AUSTRIAN PINE), 3' HEIGHT, BALLED AND BURLAPPED
- SHRUB, CORNUS SERICEA BAILEYI (BAILEY REDOSIER DOGWOOD), 3' CONTAINER

FILE NAME = c:\pw_work\pwidot\lavenderba\d0363618\D978221-sht-lndscp-04.dgn	USER NAME = $USER$	DESIGNED - KN	REVISED -
		DRAWN - AS	REVISED -
	PLOT SCALE = 200.0001 ' / in.	CHECKED -	REVISED -
	PLOT DATE = 1/31/2014	DATE -	REVISED -

STATE OF ILLINOIS
DEPARTMENT OF TRANSPORTATION

LANDSCAPING PLANS
IL 13

SCALE: | SHEET NO. 4 OF 5 SHEETS | STA. 571+00.00 TO STA. 592+90.74

F.A.P. RTE.	SECTION	COUNTY	TOTAL SHEETS	SHEET NO.
331	(1-3)R-2, N-4, TS-4, HBK-1	WILLIAMSON	733	351
DRAWING NO.	LS-04	CONTRACT NO. 78221		
		ILLINOIS FED. AID PROJECT		

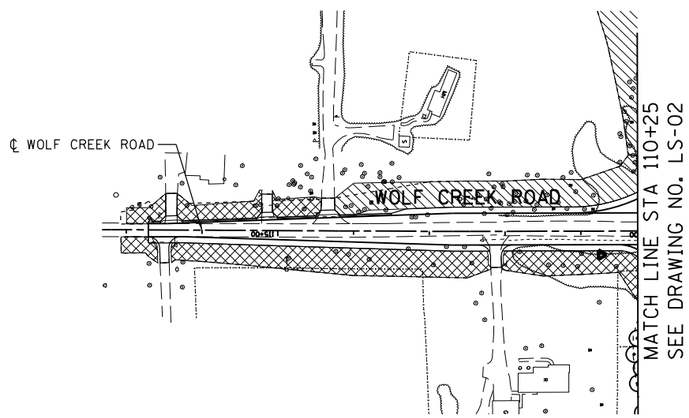

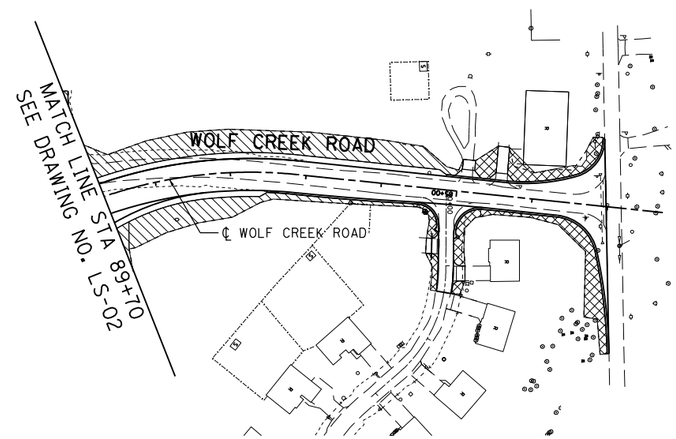

NOTES:

1. FOR A SUMMARY OF TREE REMOVALS, SEE REMOVAL SCHEDULES.
2. FOR A SUMMARY OF TREE AND SHRUB PLANTINGS, SEE LANDSCAPING SCHEDULES.

LEGEND

- SEEDING, CLASS 1A
- SEEDING, CLASS 2
- TREE, CERCIS CANADENSIS (REDBUD), CONTAINER GROWN, 3-GALLON
- EVERGREEN, PINUS NIGRA (AUSTRIAN PINE), 3' HEIGHT, BALLED AND BURLAPPED
- SHRUB, CORNUS SERICEA BAILEYI (BAILEY REDOSIER DOGWOOD), 3' CONTAINER

0 100 200
SCALE IN FEET

FILE NAME = c:\pw_work\pwidot\lavenderba\d0363618\D78221-sht-lndscp-05.dgn	USER NAME = $USER$	DESIGNED - KN	REVISED -	STATE OF ILLINOIS DEPARTMENT OF TRANSPORTATION	LANDSCAPING PLANS WOLF CREEK ROAD	F.A.P. RTE.	SECTION	COUNTY	TOTAL SHEETS	SHEET NO.
		DRAWN - AS	REVISED -			331	(1-3)R-2, N-4, TS-4, HBK-1	WILLIAMSON	733	352
	PLOT SCALE = 199.9002 ' / in.	CHECKED -	REVISED -			DRAWING NO. LS-05		CONTRACT NO. 78221		
	PLOT DATE = 1/31/2014	DATE -	REVISED -		SCALE: SHEET NO. 5 OF 5 SHEETS STA. TO STA.		ILLINOIS FED. AID PROJECT			

CABLE /CONDUIT SCHEDULE

(A)	UNIT DUCT, 600V, 2-1C NO. 6, I/C NO. 8 GROUND, (XLP-TYPE USE). 1" DIA POLYETHELENE
(B)	UNIT DUCT,600 V,2-1C NO.4,1/C NO.6 GROUND,(XLP-TYPE USE),1"DIA POLYETHYLENE
(C)	ELECTRIC CABLE IN CONDUIT, 600V, (XLP-TYPE USE). 2-1C NO. 4, 2-1C NO. 6,1/C NO.6 GROUND 1/C NO .8 GROUND IN 2" DIA PVC CONDUIT EMBEDDED IN STRUCTURE

LEGEND

	UNIT DUCT SIZE AS NOTED
	PROPOSED COILABLE NON-METALLIC CONDUIT, 2½"DIA UNLESS NOTED OTHERWISE, SCHEDULE 80
	PROPOSED LIGHTING CONTROLLER
	PROPOSED JUNCTION BOX,STAINLESS STEEL,ATTACHED TO STRUCTURE, 12 x 12 x 8
	PROPOSED LIGHTING UNIT, 45 FT,WEATHERING STEEL POLE, TENON MOUNT, 250 W HPS MULTIMOUNT LUMINAIR
	PROPOSED LIGHTING UNIT , 45 FT WEATHERING STEEL POLE,TWIN TENON, 2-250W HPS LUMINAIRES
	CONDUIT EMBEDDED IN STRUCTURE, 2" DIA PVC

NOTE

1.LUMINAIRE SHALL BE TITLED DOWN BY 5° FROM THE DEFAULT TILE POSITION OF 45°.

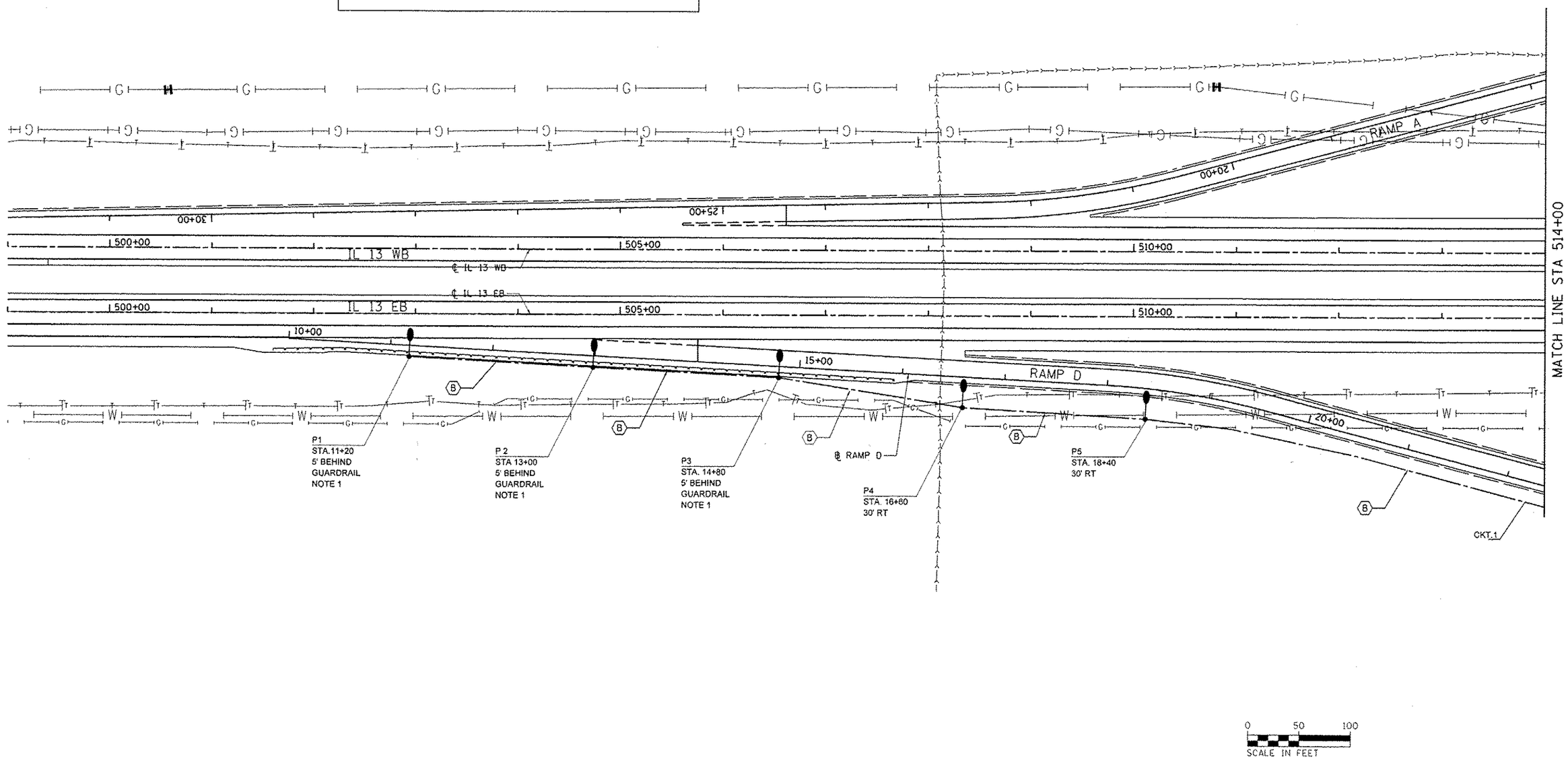

FILE NAME = c:\pw_work\pwidot\lavanderba\d0363618\D78221-sht-light-01.dgn	USER NAME = $USER$	DESIGNED - KN	REVISED -
		DRAWN - AS	REVISED -
	PLOT SCALE = 100.0000 ' / in.	CHECKED -	REVISED -
	PLOT DATE = 1/31/2014	DATE -	REVISED -

STATE OF ILLINOIS
DEPARTMENT OF TRANSPORTATION

LIGHTING PLANS
IL 13

SCALE: 1"=50' | SHEET NO. 1 OF 5 SHEETS | STA. 499+00.00 TO STA.514+00.00

F.A.P. RTE.	SECTION	COUNTY	TOTAL SHEETS	SHEET NO.
331	(1-3)R-2, N-4, TS-4, HBK-1	WILLIAMSON	733	353
DRAWING NO.		CONTRACT NO. 78221		
LT-01	ILLINOIS FED. AID PROJECT			

CABLE /CONDUIT SCHEDULE

A	UNIT DUCT, 600V, 2-1C NO. 6, 1/C NO. 8 GROUND, (XLP-TYPE USE), 1" DIA POLYETHELENE
B	UNIT DUCT,600 V,2-1C NO.4,1/C NO.6 GROUND,(XLP-TYPE USE),1"DIA POLYETHYLENE
C	ELECTRIC CABLE IN CONDUIT, 600V, (XLP-TYPE USE), 2-1C NO. 4, 2-1C NO. 6 1/C NO.6 GROUND 1/C NO .8 GROUND IN 2" DIA PVC CONDUIT EMBEDDED IN STRUCTURE

NOTES:
1.LUMINAIRE SHALL BE TILTED DOWN BY 5 DEGREE FROM THE DEFAULT TILT POSITION OF 45 DEGREES.
2.LUMINAIRE SHALL BE TILTED UP BY 10 DEGREES FROM THE DEFAULT TILT POSITION OF 45 DEGREES.

UNIT DUCT LEGEND

	SIZE AS NOTED
	PROPOSED COILABLE NON-METALLIC CONDUIT, 2½"DIA UNLESS NOTED OTHERWISE, SCHEDULE 80
	PROPOSED LIGHTING CONTROLLER
	PROPOSED JUNCTION BOX,STAINLESS STEEL,ATTACHED TO STRUCTURE, 12 x 12 x 8
	PROPOSED LIGHTING UNIT, 45 FT,WEATHERING STEEL POLE, TENON MOUNT, 250 W HPS MULTIMOUNT LUMINAIRE
	PROPOSED LIGHTING UNIT, 45 FT WEATHERING STEEL POLE,TWIN TENON, 2-250W HPS LUMINAIRES
L	CONDUT EMBEDDED IN STRUCTURE, 2" DIA PVC

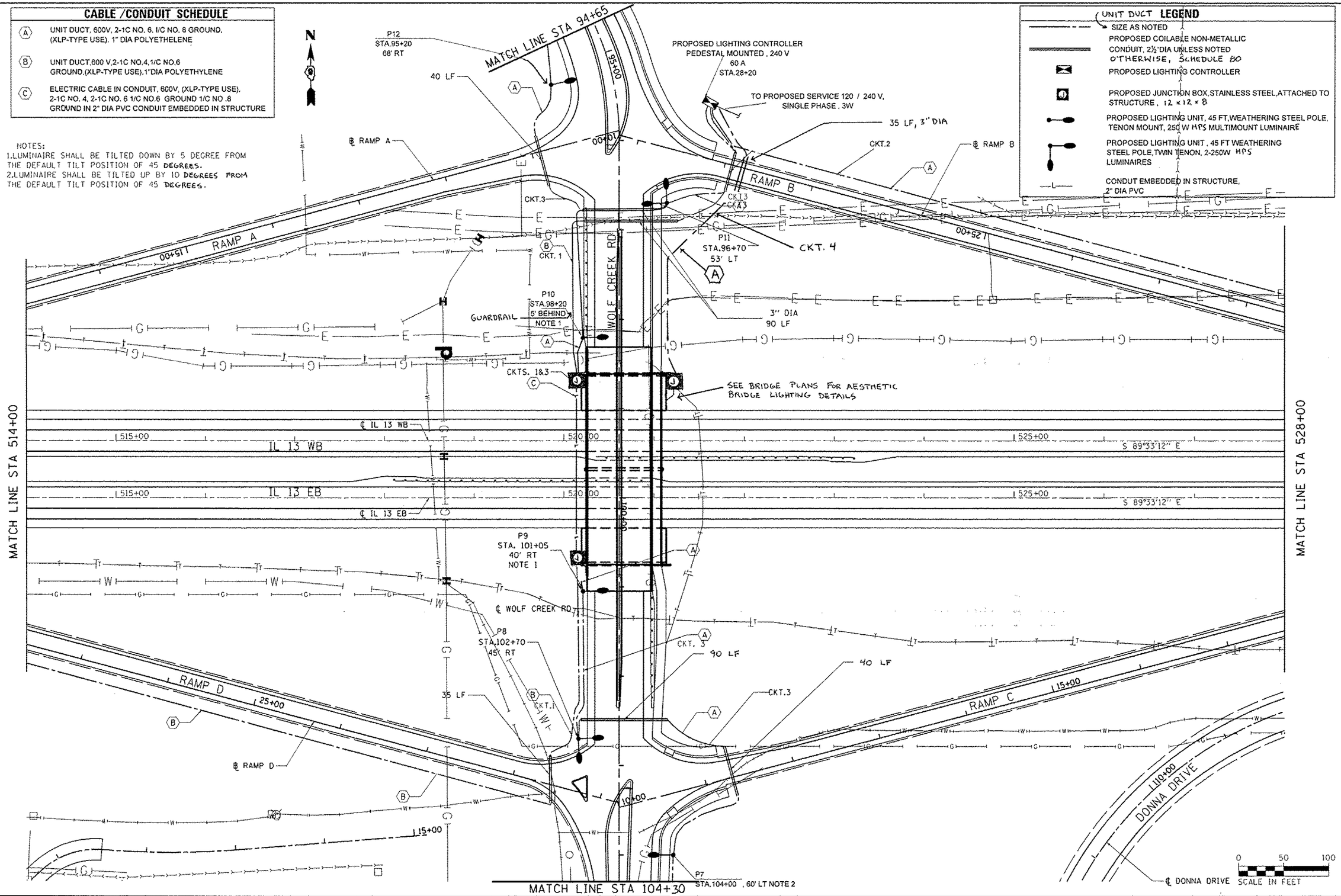

FILE NAME = c:\pw_work\pwidot\lavenderba\d0363618\D78221-sht-light-02.dgn	USER NAME = $USER$	DESIGNED - KN	REVISED -	STATE OF ILLINOIS DEPARTMENT OF TRANSPORTATION	LIGHTING PLANS IL 13	F.A.P. RTE. 331	SECTION (1-3)R-2, N-4, TS-4, HBK-1	COUNTY WILLIAMSON	TOTAL SHEETS 733	SHEET NO. 354
	PLOT SCALE = 100.3302 ' / in.	DRAWN - AS	REVISED -			DRAWING NO. LT-02		CONTRACT NO. 78221		
	PLOT DATE = 1/31/2014	CHECKED -	REVISED -		SCALE: 1"=50'	SHEET NO. 2 OF 5 SHEETS	STA. 514+00.00 TO STA. 528+00.00	ILLINOIS FED. AID PROJECT		
		DATE -	REVISED -							

CABLE /CONDUIT SCHEDULE

(A)	UNIT DUCT, 600V, 2-1C NO. 6, I/C NO. 8 GROUND, (XLP-TYPE USE). 1" DIA POLYETHELENE
(B)	UNIT DUCT,600 V,2-1C NO.4,1/C NO.6 GROUND,(XLP-TYPE USE),1"DIA POLYETHYLENE
(C)	ELECTRIC CABLE IN CONDUIT, 600V, (XLP-TYPE USE). 2-1C NO. 4, 2-1C NO. 6 1/C NO.6 GROUND 1/C NO .8 GROUND IN 2" DIA PVC CONDUIT EMBEDDED IN STRUCTURE

LEGEND

- UNIT DUCT SIZE AS NOTED
- PROPOSED COILABLE NON-METALLIC CONDUIT, 2½"DIA UNLESS NOTED OTHERWISE, SCHEDULE 80
- PROPOSED LIGHTING CONTROLLER
- PROPOSED JUNCTION BOX,STAINLESS STEEL,ATTACHED TO STRUCTURE, 12 x 12 x 8
- PROPOSED LIGHTING UNIT, 45 FT,WEATHERING STEEL POLE, TENON MOUNT, 250 W HPS MULTIMOUNT LUMINAIR
- PROPOSED LIGHTING UNIT , 45 FT WEATHERING STEEL POLE,TWIN TENON, 2-250W HPS LUMINAIRES
- CONDUT EMBEDDED IN STRUCTURE, 2" DIA PVC

N

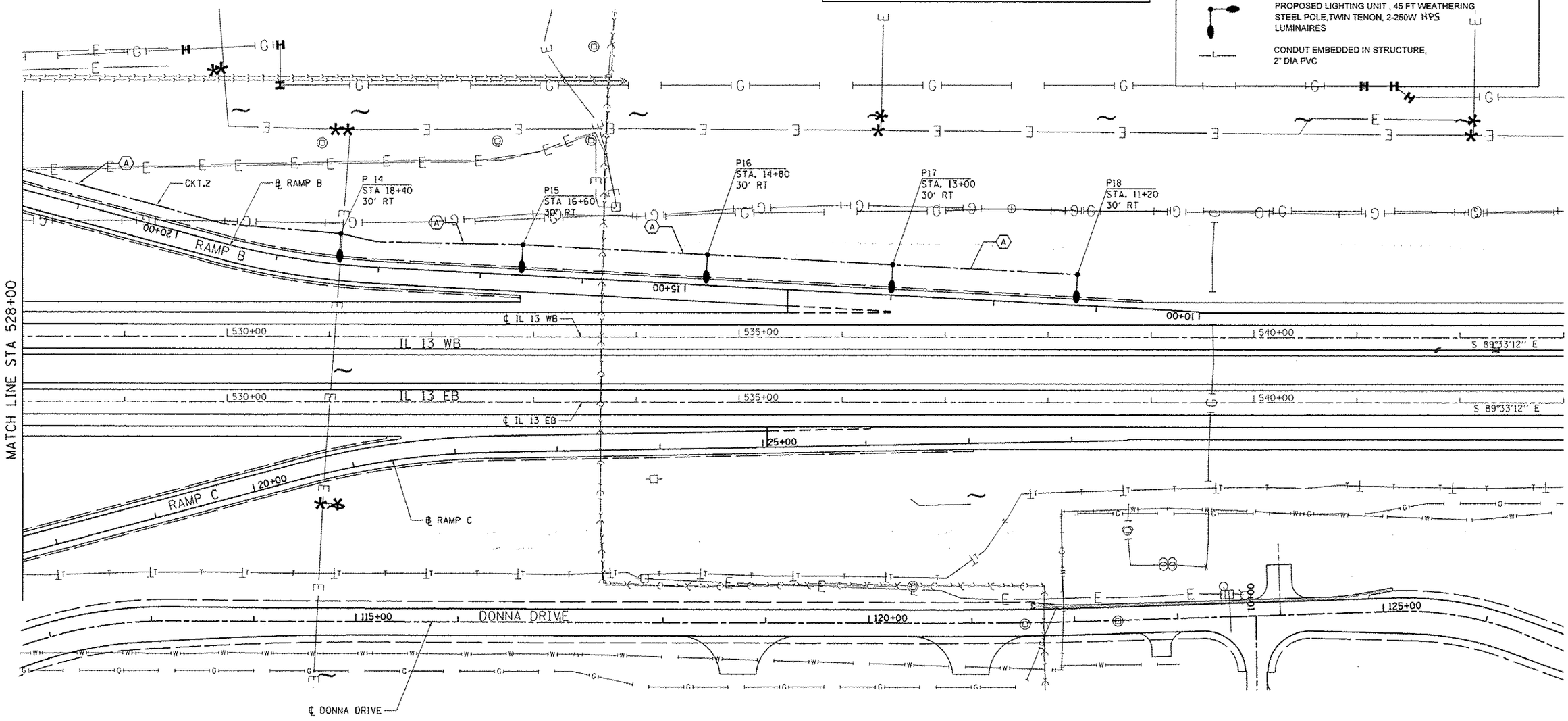

0 50 100
SCALE IN FEET

FILE NAME : c:\pw_work\pwidot\lavenderba\d0363618\D78221-sht-light-03.dgn	USER NAME : $USER$	DESIGNED - KN	REVISED -
		DRAWN - AS	REVISED -
	PLOT SCALE = 100.0000 ' / in.	CHECKED -	REVISED -
	PLOT DATE = 1/31/2014	DATE -	REVISED -

STATE OF ILLINOIS
DEPARTMENT OF TRANSPORTATION

LIGHTING PLANS
IL 13

SCALE: 1"=50' | SHEET NO. 3 OF 5 SHEETS | STA. 528+00.00 TO STA. 543+00.00

F.A.P. RTE.	SECTION	COUNTY	TOTAL SHEETS	SHEET NO.
331	(1-3)R-2, N-4, TS-4, HBK-1	WILLIAMSON	733	355
DRAWING NO.	LT-03	CONTRACT NO. 78221		
		ILLINOIS FED. AID PROJECT		

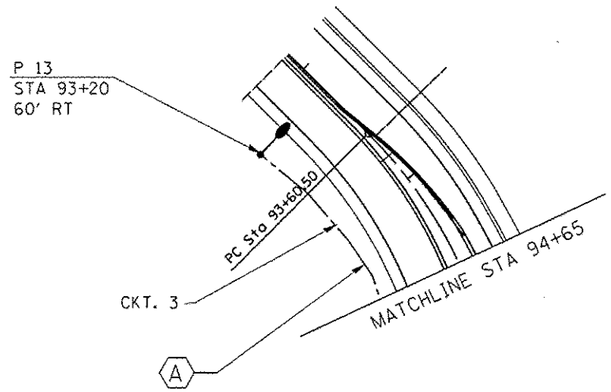

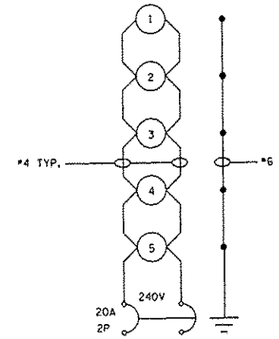

LIGHTING CKT 1
PROPOSED LIGHTING CONTROLLER
WOLF CREEK RD AT RAMP B

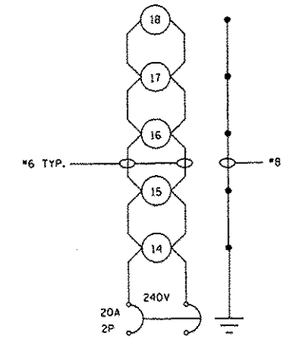

LIGHTING CKT 2
PROPOSED LIGHTING CONTROLLER
WOLF CREEK RD AT RAMP B

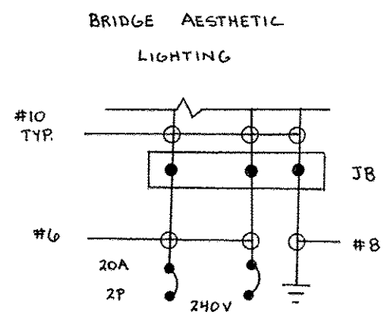

LIGHTING CKT. 4
PROPOSED LIGHTING CONTROLLER
WOLF CREEK RD AT RAMP B

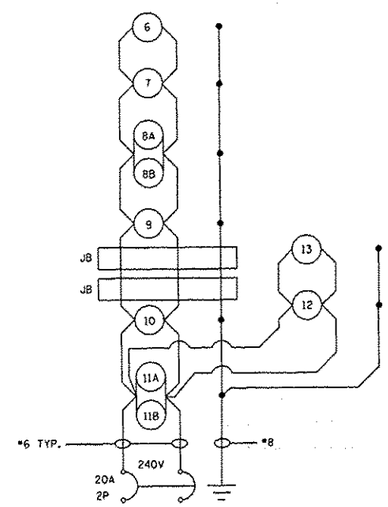

LIGHTING CKT 3
PROPOSED LIGHTING CONTROLLER
WOLF CREEK RD AT RAMP B

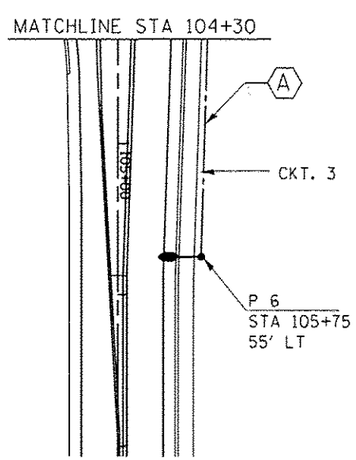

WIRING DIAGRAMS

NOTES:

ALL NECESSARY REVISIONS TO THE WIRING SHOWN ON THIS SHEET SHALL BE MADE AT NO ADDITIONAL COST TO THE DEPARTMENT AND TO THE SATISFACTION OF THE ENGINEER.

LEGEND

- ○ 250W PROPOSED LUMINAIRE
- ▭ JUNCTION BOX

FILE NAME = c:\pw_work\pwidot\lavendarba\d0363618\D78221-sht-light-04.dgn	USER NAME = $USER$	DESIGNED - KN	REVISED -	STATE OF ILLINOIS DEPARTMENT OF TRANSPORTATION	PROPOSED HIGHWAY LIGHTING CIRCUIT DIAGRAMS IL 13	F.A.P. RTE.	SECTION	COUNTY	TOTAL SHEETS	SHEET NO.
	PLOT SCALE = 2.0000 ' / in.	DRAWN - AS	REVISED -			331	(1-3)R-2, N-4, TS-4, HBK-1	WILLIAMSON	733	356
	PLOT DATE = 1/31/2014	CHECKED -	REVISED -			DRAWING NO. LT-04		CONTRACT NO. 78221		
		DATE -	REVISED -		SCALE: 1"=50' / SHEET NO. 4 OF 5 SHEETS / STA. / TO STA.			ILLINOIS FED. AID PROJECT		

LUMINAIRE PERFORMANCE TABLE • PROPOSED LIGHTING

GIVEN CONDITIONS

ROADWAY DATA:	Pavement Width	16 FT
	Number Of Lanes (In direction of travel)	1
	Median Width	N/A
	IES Surface Classification	R3
	Q-Zero Value	.07
LIGHT POLE DATA:	Mounting Height	40 FT
	Mast Arm Length	N/A
	Pole Set-Back From Edge Of Pavement	30 FT
LUMINAIRE DATA:	Lamp Type	HPS
	Lamp Lumens	28500
	IES Vertical Distribution	L
	IES Control Of Distribution	NC
	IES Lateral Distribution	4
	Total Light Loss Factor	0.684
LAYOUT DATA:	Spacing	180 FT
	Configuration	One Side
	Luminaire Overhang Over Edge Of Pavement Lane	-30 FT

NOTE: Variations from the above specified IES distribution pattern may be requested and acceptance of variations will be subject to review by the Engineer based on how well the performance requirements are met.

PERFORMANCE REQUIREMENTS

NOTE: These performance requirements shall be the minimum acceptable standards of photometric performance for the luminaire, based on the given conditions listed above.

ILLUMINATION:	Average Horizontal Illumination, (EAve)		0.90 fc
	Uniformity Ratio, (EAve/EMin)		3.0
LUMINANCE:	Average Luminance:	(LAve)	0.60 Cd/m2
	Uniformity Ratios:	(LAve/LMin)	3.5
		(LMax/LMin)	6.0
	Maximum Veiling Luminance Ratio:	(Lv/LAve)	0.3

GENERAL LIGHTING NOTES

1. ALL PROPOSED LIGHTING UNITS SHALL BE LABELED ACCORDING TO THE STANDARD SPECIFICATIONS, WITH POLE NUMBERS ATTACHED WITH STAINLESS STEEL BANDING. LIGHTING UNIT NUMBERING SHALL BE AS DIRECTED BY THE ENGINEER.

2. CONTRACTOR SHALL BE RESPONSIBLE TO COORDINATE ELECTRICAL WORK WITH OTHER TRADES.

3. CONTRACTOR SHALL INSTALL LIGHT POLES AT THE LOCATIONS INDICATED ON THE PLANS, MAINTAINING ADEQUATE CLEARANCE FROM OVERHEAD UTILITY LINES. CONTRACTOR SHALL BE RESPONSIBLE TO VERIFY CLEARANCES PER THE NATIONAL ELECTRICAL SAFETY CODE AND/OR THE REQUIREMENTS OF THE UTILITY COMPANIES. THE CONTRACTOR SHALL NOTIFY THE ENGINEER OF ALL CONFLICTS BETWEEN PROPOSED LIGHT POLE LOCATIONS AND UTILITY LINES. THE LOCATION OF BURIED AND ABOVE GROUND UTILITIES SHOWN ARE APPROXIMATE AND ARE SHOWN FOR INFORMATION ONLY. REROUTING, DISCONNECTION, RELOCATION, PROTECTION ETC., OF ANY UTILITIES MUST BE COORDINATED BETWEEN THE CONTRACTOR, UTILITY COMPANY, AND OWNER. THE CONTRACTOR SHALL VERIFY THE EXACT LOCATION OF ALL UNDERGROUND UTILITIES PRIOR TO CONSTRUCTION.

4. THE CONTRACTOR IS RESPONSIBLE FOR UNCOVERING OR HAND DIGGING AROUND UTILITIES AS NECESSARY. THE COST OF THIS WORK IS TO BE INCLUDED WITH THE APPLICABLE UNDERGROUND CONDUIT OR UNIT DUCT PAY ITEM.

5. PROPOSED LIGHT POLES TO BE INSTALLED AT A 30 FEET SETBACK FROM THE EDGE OF TRAVELED PAVEMENT OR 5 FEET BEHIND THE GUARDRAIL UNLESS NOTED OTHERWISE ON THE PLANS. NO POLES TO BE INSTALLED IN THE FLOWLINE OF DITCH. POLE SETBACK TO BE INCREASED IF NECESSARY AS DIRECTED BY THE ENGINEER.

6. NO LIGHTING CIRCUIT OR PORTION THEREOF SHALL BE REMOVED FROM NIGHTTIME OPERATION WITHOUT APPROVAL OF THE ENGINEER.

7. THE CONTRACTOR SHALL BE RESPONSIBLE FOR MAINTAINING THE LIGHTING SYSTEM UNTIL IDOT HAS TAKEN ACCEPTANCE OF THE SYSTEM. ALL EXISTING CIRCUITS AND CABLES TO THE LIGHT POLES SHALL BE MAINTAINED AS NEEDED AND THIS WORK SHALL BE INCIDENTAL TO THE CONTRACT.

8. BREAKAWAY DEVICES SHALL NOT BE INSTALLED FOR POLES LOCATED BEHIND THE GUARDRAIL.

9. UNDERGROUND COILABLE NON-METALLIC CONDUIT SHALL BE SCHEDULE 80.

10. LIGHT POLE FOUNDATIONS SHALL BE INSTALLED PLUMB AND FLUSH WITH THE PROPOSED GRADE AND SHALL MEET THE HEIGHT REQUIREMENTS OF ARTICLE 836.03 OF THE STANDARD SPECIFICATIONS. AFTER UNIT DUCT IS INSTALLED, FOUNDATIONS SHALL BE FILLED WITH FINE AGGREGATE ACCORDING TO ARTICLE 836.03. WASHERS USED TO INSTALL THE POLE SHALL BE LARGE ENOUGH TO FULLY COVER THE SLOTTED HOLES IN THEPOLE BASE PLATE. THE VOIDS ON THE BOTTOM SIDE OF THE POLE BASE MUST BE SEALED FROM RODENT ENTRY WITH STAINLESS STEEL SCREEN.

11. STAINLESS STEEL SCREEN INSTALLED AROUND BREAKAWAY COUPLINGS OR ANCHOR RODS AND NUTS SHALL BE ACCORDING TO ARTICLE 1070.04(a)(2)c OF THE STANDARD SPECIFICATIONS EXCEPT THE MINIMUM WIRE DIAMETER SHALL BE AWG NO. 16 (1.6 mm).

12. THE CONTRACTOR SHALL FURNISH AND INSTALL A CONCRETE WORK PAD IN FRONT OF THE LIGHTING CONTROLLER PER SECTION 825 OF THE STANDARD SPECIFICATIONS.

13. THE CONTRACTOR SHALL INSTALL ALL LUMINAIRES WITH OPTICS SET PERPENDICULAR TO THE CENTERLINE OF THE ROADWAY.

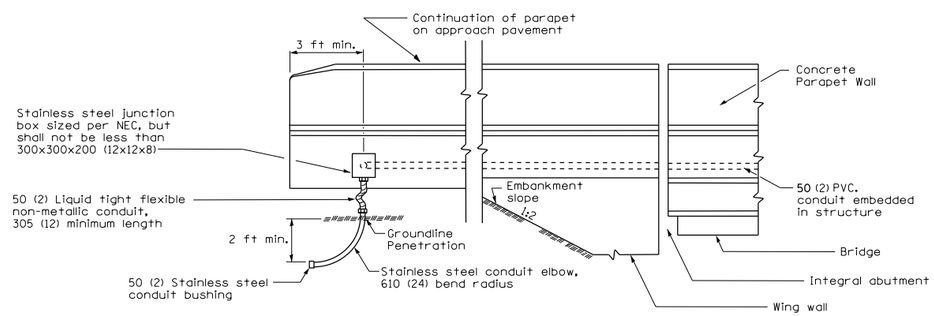

CONDUIT DETAIL
(Integral Abutment)

All dimensions are in millimeters (inches) unless otherwise shown.

CONDUIT EXITING PARAPET ON APPROACH PAVEMENT

FILE NAME = c:\pw_work\pwidot\lavenderba\d0363618\D478221-sht-light-05.dgn	USER NAME = $USER$	DESIGNED - KN	REVISED -	STATE OF ILLINOIS DEPARTMENT OF TRANSPORTATION	LIGHTING PLANS BILL OF MATERIALS, GENERAL NOTES AND PERFORMANCE TABLE	F.A.P. RTE.	SECTION	COUNTY	TOTAL SHEETS	SHEET NO.
		DRAWN - AS	REVISED -			331	(1-3)R-2, N-4, TS-4, HBK-1	WILLIAMSON	733	357
	PLOT SCALE = 2.0000 ' / in.	CHECKED -	REVISED -			DRAWING NO. LT-05		CONTRACT NO. 78221		
	PLOT DATE = 1/31/2014	DATE -	REVISED -		SCALE: 1"=50' / SHEET NO. 5 OF 5 SHEETS / STA. / TO STA.		ILLINOIS FED. AID PROJECT			

Bench Mark: BM12 Cut square on top of the south headwall of a 24" across road culvert. in the SW quadrant of Rte 13 EBL and North Wolf Creek Road. 132.11' right of the ℄ of Rte 13 WBL @ Sta. 519+39.87. Elev. 445.70.

Existing Structure: None.

Traffic to be detoured.

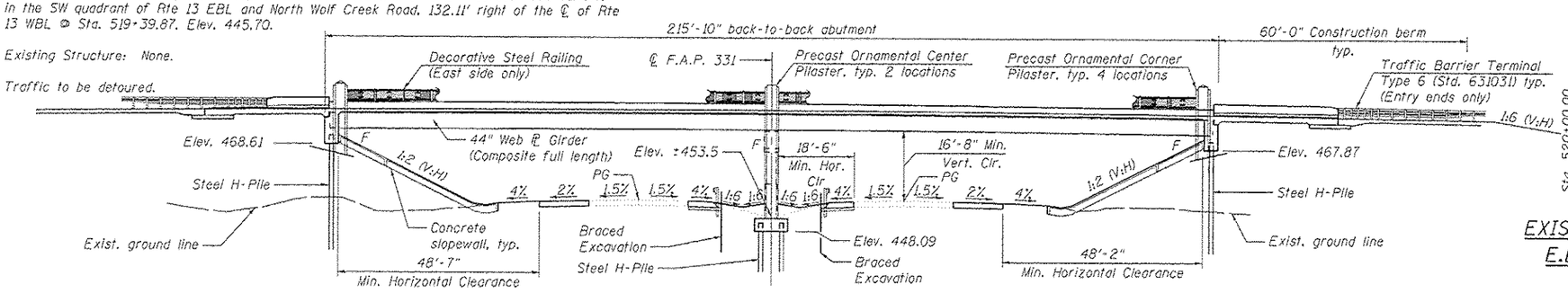

ELEVATION

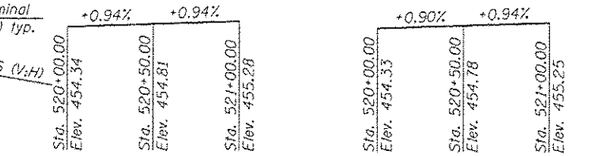

EXISTING PROFILE GRADE
E.B. F.A.P. 331 (IL 13)

EXISTING PROFILE GRADE
W.B. F.A.P. 331 (IL 13)

Note:
See Roadway drawings for Precast Ornamental Pilaster and riprap details.

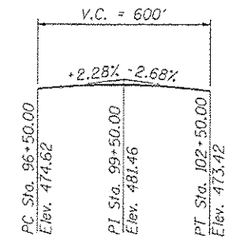

PROFILE GRADE
WOLF CREEK ROAD

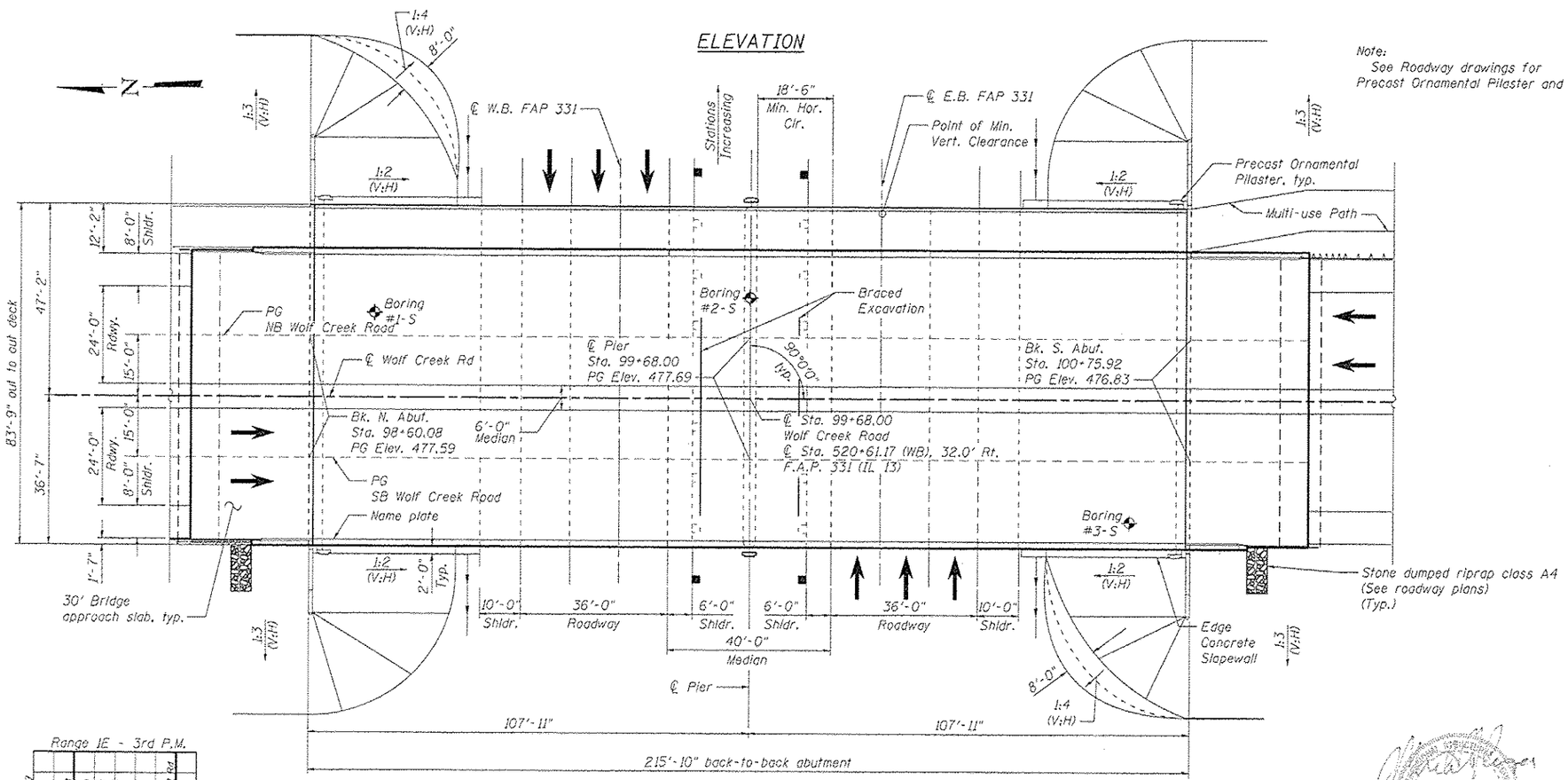

PLAN

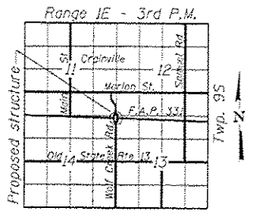

LOCATION SKETCH

LOADING HL-93
Allow 50#/sq. ft. for future wearing surface.

DESIGN SPECIFICATIONS
2012 AASHTO LRFD Bridge Design Specifications 6th edition

DESIGN STRESSES
FIELD UNITS
f'c = 3,500 psi
fy = 60,000 psi (Reinforcement)
fy = 50,000 psi (M270 Grade 50)

SEISMIC DATA
Seismic Performance Zone (SPZ) = 2
Design Spectral Acceleration at 1.0 sec. (S_{D1}) = 0.264g
Design Spectral Acceleration at 0.2 sec. (S_{DS}) = 0.727g
Soil Site Class = C

APPROVED
For Structural Adequacy Only
Engineer of Bridges & Structures

12/24/13

Michael J. Cooper
Licensed Structural Engineer
State of Illinois No. 081007297

GENERAL PLAN & ELEVATION
WOLF CREEK ROAD
OVER F.A.P. 331 (IL 13)
SEC (1-3) HBK-1
WILLIAMSON COUNTY
STATION 99+68.00
STRUCTURE NO. 100-0099

FILE NAME = 1322859-178221-001-GPE.dgn	USER NAME = mfox	DESIGNED - DF	REVISED -	STATE OF ILLINOIS DEPARTMENT OF TRANSPORTATION	GENERAL PLAN AND ELEVATION	F.A.P. RTE.	SECTION	COUNTY	TOTAL SHEETS / SHEET NO.
CH2MHILL		CHECKED - JE	REVISED -			331	(1-3)R-2,_N-4,_TS-4,_HBK-1	WILLIAMSON	733 / 358
	PLOT SCALE = 32.2002 ' / in.	DRAWN - AK	REVISED -		SHEET NO. 1 OF 27 SHEETS		DRAWING NO. BR-01	CONTRACT NO. 78221	
	PLOT DATE = 2/27/2014	CHECKED - JE	REVISED -				ILLINOIS FED. AID PROJECT		

GENERAL NOTES

Fasteners shall be ASTM A325 Type 1, mechanically galvanized bolts. Bolts $\frac{7}{8}$ in. ϕ, holes $\frac{15}{16}$ in. ϕ, unless otherwise noted.

Calculated weight of Grade 36 Structural Steel = 55,100 Pounds.

Calculated weight of Grade 50 Structural Steel = 448,515 Pounds.

No field welding is permitted except as specified in the contract documents. Reinforcement bars designated (E) shall be epoxy coated.

Bearing seat surfaces shall be constructed or adjusted to the designated elevations within a tolerance of $\frac{1}{8}$ inch (0.01 ft.). Adjustment shall be made either by grinding the surface or by shimming the bearings.

The Inorganic Zinc Rich Primer / Acrylic / Acrylic Paint System shall be used for shop and field painting of new structural steel except where otherwise noted. The color of the final finish coat for all interior steel surfaces shall be gray, Munsell No. 5B 7/1. The color of the final finish coat for the exterior and bottom flange of the fascia beams shall be Reddish Brown, Munsell No. 2.5 YR 3/4.

All exposed concrete edges shall have a $\frac{3}{4}$" x 45° chamfer, except where shown otherwise on vertical edges shall be continued a minimum of one foot below finished ground level.

Slipforming of the parapets is not allowed.

The embankment configuration shown shall be the minimum that must be placed and compacted prior to construction of the abutments.

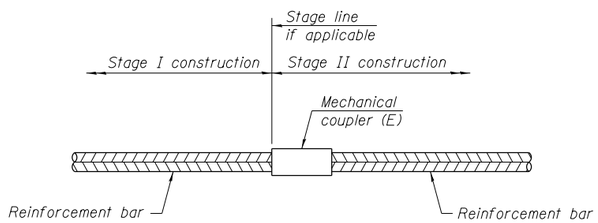

STANDARD MECHANICAL SPLICER

Location	Bar size	No. assemblies required
Pier Crashwall	No. 5	40

NOTES

See approved list of bar splicer assemblies and mechanical splicers for alternatives.

INDEX OF SHEETS

1 General Plan and Elevation
2 General Notes, Index of Sheets and Total Bill of Materials
3 Top of Deck Elevations Plan
4 Top of Deck Elevations I
5 Top of Deck Elevations II
6 Top of North Approach Slab Elevations
7 Top of South Approach Slab Elevations
8 Deck Plan
9 Deck Cross Section
10 Superstructure Details
11 Integral Abutment Diaphragm Details
12 Bridge Approach Slab Details I
13 Bridge Approach Slab Details II
14 Bridge Approach Slab Details III
15 Bridge Railing Details I
16 Bridge Railing Details II
17 Framing Plan
18 Steel Details
19 Bearing and Miscellaneous Details
20 North Abutment Plan and Elevation
21 South Abutment Plan and Elevation
22 Abutment Details
23 Pier Plan and Elevation
24 Pier Details
25 HP Pile Details
26 Soil Boring Logs
27 Soil Boring Logs

TOTAL BILL OF MATERIAL

ITEM	UNIT	SUPER	SUB	TOTAL
Granular Backfill For Structures	Cu. Yd.		335	335
Structure Excavation	Cu. Yd.		335	335
Braced Excavation	Cu. Yd.		188	188
Concrete Structures	Cu. Yd.		342.7	342.7
Concrete Superstructure	Cu. Yd.	860.1		860.1
Bridge Deck Grooving	Sq. Yd.	1826		1826
Protective Coat	Sq. Yd.	2661.7	33.2	2695
Furnishing and Erecting Structural Steel	Lump Sum	1		1
Stud Shear Connectors	Each	6090		6090
Reinforcement Bars, Epoxy Coated	Pound	214,770	77,310	292,080
Mechanical Splicers	Each		40	40
Furnishing Steel Piles HP 14x89	Foot		1744	1744
Driving Piles	Foot		1744	1744
Test Pile Steel HP 14x89	Each		1	1
Name Plates	Each		1	1
Anchor Bolts, 1"	Each	40		40
Anchor Bolts, $1\frac{1}{4}$"	Each	20		20
Geocomposite Wall Drain	Sq. Yd.		187	187
Decorative Steel Railing	Foot	211		211
Parapet Mounted Bridge Lighting System	Lump Sum	1		1
Staining Concrete Structures	Sq. Ft.	2286	3465	5751
Slope Wall, 4 Inch	Sq. Yd.		797	797
Parapet Railing	Foot	423		423
Pipe Underdrains For Structures 4"	Foot		234	234

STATION 99+68.00
BUILT BY
STATE OF ILLINOIS
F.A.P. 331 SEC.(1-3) HBK-1
LOADING HL-93
STRUCTURE NO. 100-0099

NAME PLATE

See Std. 515001

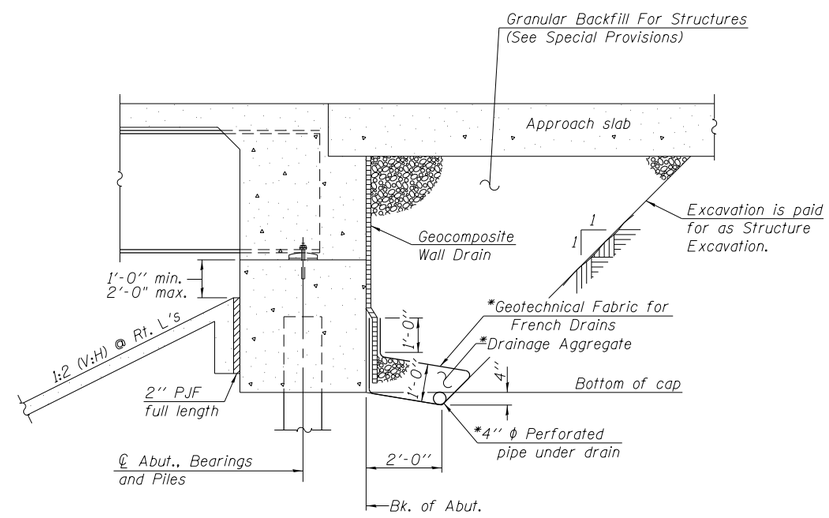

SECTION THRU INTEGRAL ABUTMENT

(Horiz. dim. @ Rt. L's)

*Included in the cost of Pipe Underdrains for Structures. (See Special Provisions)

Note:
All drainage system components shall extend to 2'-0" from the end of each wingwall except an outlet pipe shall extend until intersecting with the side slopes. The pipes shall drain into concrete headwalls. (See Article 601.05 of the Standard Specifications and Highway Standard 601101).

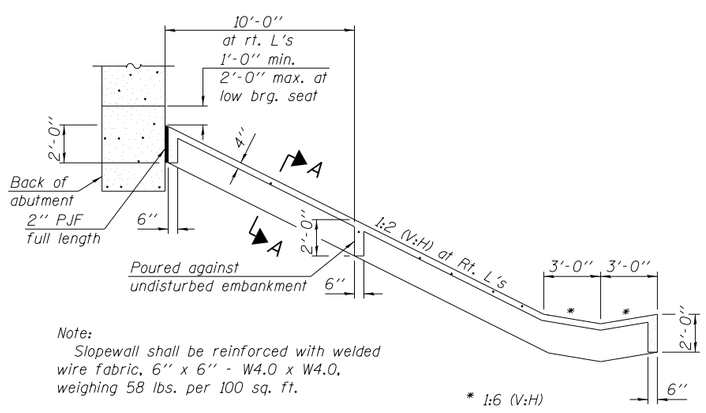

Note:
Slopewall shall be reinforced with welded wire fabric, 6" x 6" - W4.0 x W4.0, weighing 58 lbs. per 100 sq. ft.

SECTION THRU CONCRETE SLOPEWALL

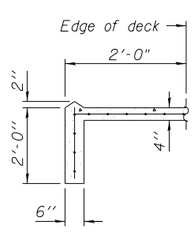

SECTION A-A

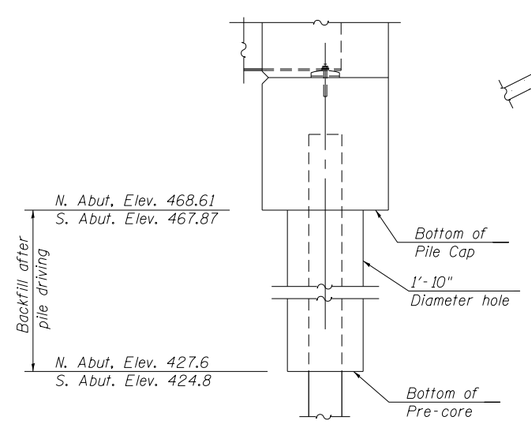

PRE-CORE DETAIL

FILE NAME = 1000099-978221-002-GNI_BOM.dgn	USER NAME = mfox	DESIGNED - DF	REVISED -	STATE OF ILLINOIS DEPARTMENT OF TRANSPORTATION	GENERAL NOTES, INDEX OF SHEETS AND TOTAL BILL OF MATERIALS STRUCTURE NO. 100-0099	F.A.P. RTE.	SECTION	COUNTY	TOTAL SHEETS	SHEET NO.
CH2MHILL®		CHECKED - JE	REVISED -			331	(1-3)R-2,_N-4,_TS-4,_HBK-1	WILLIAMSON	733	359
	PLOT SCALE = 0.1667 ' / in.	DRAWN - AK	REVISED -		SHEET NO. 2 OF 27 SHEETS	DRAWING NO. BR-02		CONTRACT NO. 78221		
	PLOT DATE = 3/12/2014	CHECKED - JE	REVISED -			ILLINOIS FED. AID PROJECT				

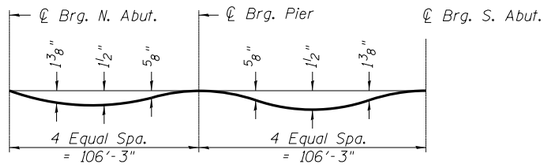

DEAD LOAD DEFLECTION DIAGRAM

(Includes weight of slab and parapet, no future wearing surface.)

Note:
The above deflections are not to be used in the field if the engineer is working from grade elevations adjusted for dead load deflections as shown on sheets 4 and 5.

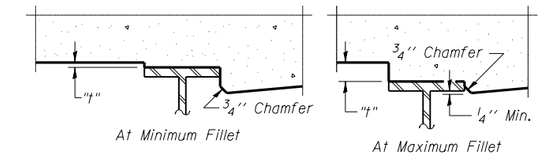

To determine "t": After all structural steel has been erected, elevations of the top flanges of the beams shall be taken at intervals shown below. These elevations subtracted from the "Theoretical Grade Elevations Adjusted for Dead Load Deflection" shown on the Top of Deck Elevation sheets, minus slab thickness, equals the fillet heights "t" above top flange of beams.

FILLET HEIGHTS

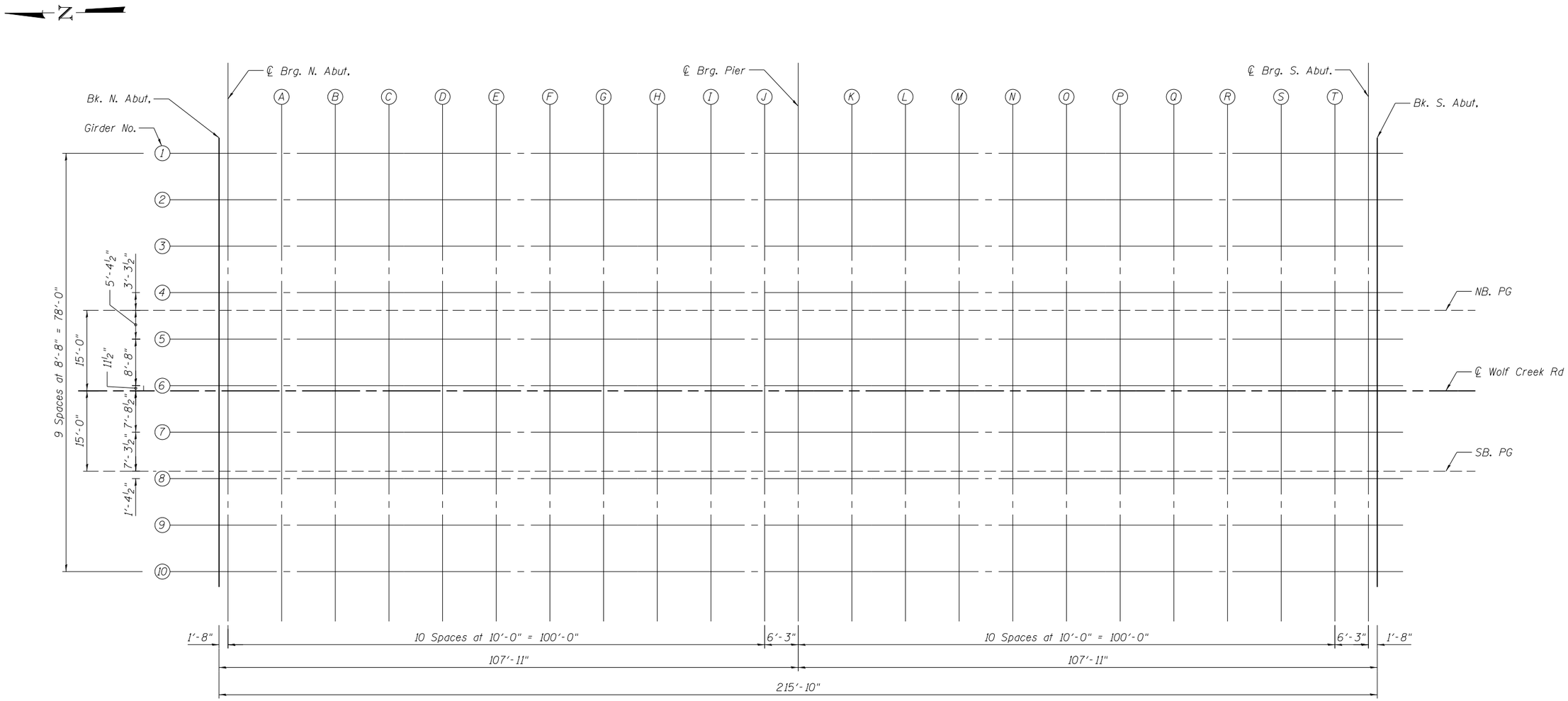

PLAN

FILE NAME = c:\pw_work\pwidot\lavenderba\d0363618\1000099-978221-003-TOD_Plan.dgn	USER NAME = $USER$	DESIGNED - DF	REVISED -	STATE OF ILLINOIS DEPARTMENT OF TRANSPORTATION	TOP OF DECK ELEVATIONS PLAN STRUCTURE NO. 100-0099	F.A.P. RTE.	SECTION	COUNTY	TOTAL SHEETS / SHEET NO.
		CHECKED - JE	REVISED -			331	(1-3)R-2,_N-4,_TS-4,_HBK-1	WILLIAMSON	733 / 360
CH2MHILL®	PLOT SCALE = 20.0000 ' / in.	DRAWN - AK	REVISED -			DRAWING NO. BR-03		CONTRACT NO. 78221	
	PLOT DATE = 1/31/2014	CHECKED - JE	REVISED -		SHEET NO. 3 OF 27 SHEETS			ILLINOIS FED. AID PROJECT	

GIRDER 1

Location		Station	Offset	Theoretical Grade Elevations	Theoretical Grade Elevations Adjusted for Dead Load Deflection
BK.	N. Abut.	098+61.08	-29.29	476.98	476.98
CL Brg	N. Abut.	098+61.75	-29.29	476.98	476.98
	A	098+71.75	-29.29	477.03	477.11
	B	098+81.75	-29.29	477.07	477.21
	C	098+91.75	-29.29	477.11	477.29
	D	099+01.75	-29.29	477.13	477.33
	E	099+11.75	-29.29	477.15	477.35
	F	099+21.75	-29.29	477.15	477.33
	G	099+31.75	-29.29	477.15	477.29
	H	099+41.75	-29.29	477.14	477.23
	I	099+51.75	-29.29	477.13	477.17
	J	099+61.75	-29.29	477.10	477.12
CL Brg	Pier	099+68.00	-29.29	477.08	477.08
	K	099+78.00	-29.29	477.04	477.05
	L	099+88.00	-29.29	476.99	477.02
	M	099+98.00	-29.29	476.94	477.00
	N	100+08.00	-29.29	476.87	476.97
	O	100+18.00	-29.29	476.80	476.94
	P	100+28.00	-29.29	476.72	476.88
	Q	100+38.00	-29.29	476.63	476.79
	R	100+48.00	-29.29	476.54	476.68
	S	100+58.00	-29.29	476.43	476.54
	T	100+68.00	-29.29	476.32	476.38
CL Brg	S. Abut.	100+74.25	-29.29	476.24	476.24
BK.	S. Abut.	100+75.92	-29.29	476.22	476.22

GIRDER 2

Location		Station	Offset	Theoretical Grade Elevations	Theoretical Grade Elevations Adjusted for Dead Load Deflection
BK.	N. Abut.	098+61.08	-20.63	477.16	477.16
CL Brg	N. Abut.	098+61.75	-20.63	477.16	477.16
	A	098+71.75	-20.63	477.21	477.29
	B	098+81.75	-20.63	477.25	477.39
	C	098+91.75	-20.63	477.29	477.47
	D	099+01.75	-20.63	477.31	477.51
	E	099+11.75	-20.63	477.33	477.53
	F	099+21.75	-20.63	477.33	477.51
	G	099+31.75	-20.63	477.33	477.47
	H	099+41.75	-20.63	477.32	477.41
	I	099+51.75	-20.63	477.31	477.35
	J	099+61.75	-20.63	477.28	477.30
CL Brg	Pier	099+68.00	-20.63	477.26	477.26
	K	099+78.00	-20.63	477.22	477.23
	L	099+88.00	-20.63	477.17	477.20
	M	099+98.00	-20.63	477.12	477.18
	N	100+08.00	-20.63	477.06	477.16
	O	100+18.00	-20.63	476.98	477.12
	P	100+28.00	-20.63	476.90	477.06
	Q	100+38.00	-20.63	476.81	476.97
	R	100+48.00	-20.63	476.72	476.86
	S	100+58.00	-20.63	476.61	476.72
	T	100+68.00	-20.63	476.50	476.56
CL Brg	S. Abut.	100+74.25	-20.63	476.42	476.42
BK.	S. Abut.	100+75.92	-20.63	476.40	476.40

GIRDER 3

Location		Station	Offset	Theoretical Grade Elevations	Theoretical Grade Elevations Adjusted for Dead Load Deflection
BK.	N. Abut.	098+61.08	-11.96	477.34	477.34
CL Brg	N. Abut.	098+61.75	-11.96	477.35	477.35
	A	098+71.75	-11.96	477.39	477.47
	B	098+81.75	-11.96	477.43	477.57
	C	098+91.75	-11.96	477.47	477.65
	D	099+01.75	-11.96	477.49	477.69
	E	099+11.75	-11.96	477.51	477.71
	F	099+21.75	-11.96	477.51	477.69
	G	099+31.75	-11.96	477.51	477.65
	H	099+41.75	-11.96	477.50	477.59
	I	099+51.75	-11.96	477.49	477.53
	J	099+61.75	-11.96	477.46	477.48
CL Brg	Pier	099+68.00	-11.96	477.44	477.44
	K	099+78.00	-11.96	477.40	477.41
	L	099+88.00	-11.96	477.36	477.38
	M	099+98.00	-11.96	477.30	477.36
	N	100+08.00	-11.96	477.24	477.34
	O	100+18.00	-11.96	477.16	477.30
	P	100+28.00	-11.96	477.08	477.24
	Q	100+38.00	-11.96	476.99	477.15
	R	100+48.00	-11.96	476.90	477.04
	S	100+58.00	-11.96	476.79	476.90
	T	100+68.00	-11.96	476.68	476.74
CL Brg	S. Abut.	100+74.25	-11.96	476.60	476.60
BK.	S. Abut.	100+75.92	-11.96	476.58	476.58

GIRDER 4

Location		Station	Offset	Theoretical Grade Elevations	Theoretical Grade Elevations Adjusted for Dead Load Deflection
BK.	N. Abut.	098+61.08	-3.29	477.52	477.52
CL Brg	N. Abut.	098+61.75	-3.29	477.53	477.53
	A	098+71.75	-3.29	477.57	477.65
	B	098+81.75	-3.29	477.62	477.75
	C	098+91.75	-3.29	477.65	477.83
	D	099+01.75	-3.29	477.67	477.87
	E	099+11.75	-3.29	477.69	477.89
	F	099+21.75	-3.29	477.69	477.87
	G	099+31.75	-3.29	477.69	477.83
	H	099+41.75	-3.29	477.69	477.77
	I	099+51.75	-3.29	477.67	477.71
	J	099+61.75	-3.29	477.64	477.66
CL Brg	Pier	099+68.00	-3.29	477.62	477.62
	K	099+78.00	-3.29	477.58	477.59
	L	099+88.00	-3.29	477.54	477.56
	M	099+98.00	-3.29	477.48	477.54
	N	100+08.00	-3.29	477.42	477.52
	O	100+18.00	-3.29	477.34	477.48
	P	100+28.00	-3.29	477.26	477.42
	Q	100+38.00	-3.29	477.18	477.33
	R	100+48.00	-3.29	477.08	477.22
	S	100+58.00	-3.29	476.97	477.08
	T	100+68.00	-3.29	476.86	476.92
CL Brg	S. Abut.	100+74.25	-3.29	476.78	476.78
BK.	S. Abut.	100+75.92	-3.29	476.76	476.76

NB & SB PROFILE GRADE

Location		Station	Offset	Theoretical Grade Elevations	Theoretical Grade Elevations Adjusted for Dead Load Deflection
BK.	N. Abut.	098+61.08	0.00	477.59	477.59
CL Brg	N. Abut.	098+61.75	0.00	477.59	477.59
	A	098+71.75	0.00	477.64	477.72
	B	098+81.75	0.00	477.68	477.82
	C	098+91.75	0.00	477.72	477.90
	D	099+01.75	0.00	477.74	477.94
	E	099+11.75	0.00	477.76	477.96
	F	099+21.75	0.00	477.76	477.94
	G	099+31.75	0.00	477.76	477.90
	H	099+41.75	0.00	477.75	477.84
	I	099+51.75	0.00	477.74	477.78
	J	099+61.75	0.00	477.71	477.73
CL Brg	Pier	099+68.00	0.00	477.69	477.69
	K	099+78.00	0.00	477.65	477.66
	L	099+88.00	0.00	477.60	477.63
	M	099+98.00	0.00	477.55	477.61
	N	100+08.00	0.00	477.48	477.59
	O	100+18.00	0.00	477.41	477.55
	P	100+28.00	0.00	477.33	477.49
	Q	100+38.00	0.00	477.24	477.40
	R	100+48.00	0.00	477.15	477.29
	S	100+58.00	0.00	477.04	477.15
	T	100+68.00	0.00	476.93	476.99
CL Brg	S. Abut.	100+74.25	0.00	476.85	476.85
BK.	S. Abut.	100+75.92	0.00	476.83	476.83

GIRDER 5

Location		Station	Offset	Theoretical Grade Elevations	Theoretical Grade Elevations Adjusted for Dead Load Deflection
BK.	N. Abut.	098+61.08	5.37	477.70	477.70
CL Brg	N. Abut.	098+61.75	5.37	477.71	477.71
	A	098+71.75	5.37	477.76	477.83
	B	098+81.75	5.37	477.80	477.93
	C	098+91.75	5.37	477.83	478.01
	D	099+01.75	5.37	477.85	478.06
	E	099+11.75	5.37	477.87	478.07
	F	099+21.75	5.37	477.88	478.05
	G	099+31.75	5.37	477.87	478.01
	H	099+41.75	5.37	477.87	477.95
	I	099+51.75	5.37	477.85	477.89
	J	099+61.75	5.37	477.82	477.84
CL Brg	Pier	099+68.00	5.37	477.80	477.80
	K	099+78.00	5.37	477.76	477.77
	L	099+88.00	5.37	477.72	477.74
	M	099+98.00	5.37	477.66	477.72
	N	100+08.00	5.37	477.60	477.70
	O	100+18.00	5.37	477.52	477.66
	P	100+28.00	5.37	477.44	477.60
	Q	100+38.00	5.37	477.36	477.51
	R	100+48.00	5.37	477.26	477.40
	S	100+58.00	5.37	477.15	477.26
	T	100+68.00	5.37	477.04	477.10
CL Brg	S. Abut.	100+74.25	5.37	476.97	476.97
BK.	S. Abut.	100+75.92	5.37	476.94	476.94

GIRDER 6

Location		Station	Offset	Theoretical Grade Elevations	Theoretical Grade Elevations Adjusted for Dead Load Deflection
BK.	N. Abut.	098+61.08	14.04	477.88	477.88
CL Brg	N. Abut.	098+61.75	14.04	477.89	477.89
	A	098+71.75	14.04	477.94	478.01
	B	098+81.75	14.04	477.98	478.11
	C	098+91.75	14.04	478.01	478.19
	D	099+01.75	14.04	478.03	478.24
	E	099+11.75	14.04	478.05	478.25
	F	099+21.75	14.04	478.06	478.23
	G	099+31.75	14.04	478.06	478.19
	H	099+41.75	14.04	478.05	478.13
	I	099+51.75	14.04	478.03	478.07
	J	099+61.75	14.04	478.00	478.02
CL Brg	Pier	099+68.00	14.04	477.98	477.98
	K	099+78.00	14.04	477.94	477.95
	L	099+88.00	14.04	477.90	477.92
	M	099+98.00	14.04	477.84	477.91
	N	100+08.00	14.04	477.78	477.88
	O	100+18.00	14.04	477.71	477.84
	P	100+28.00	14.04	477.63	477.78
	Q	100+38.00	14.04	477.54	477.70
	R	100+48.00	14.04	477.44	477.58
	S	100+58.00	14.04	477.33	477.44
	T	100+68.00	14.04	477.22	477.28
CL Brg	S. Abut.	100+74.25	14.04	477.15	477.15
BK.	S. Abut.	100+75.92	14.04	477.13	477.13

GIRDER 7

Location		Station	Offset	Theoretical Grade Elevations	Theoretical Grade Elevations Adjusted for Dead Load Deflection
BK.	N. Abut.	098+61.08	-7.29	477.74	477.74
CL Brg	N. Abut.	098+61.75	-7.29	477.75	477.75
	A	098+71.75	-7.29	477.80	477.87
	B	098+81.75	-7.29	477.84	477.97
	C	098+91.75	-7.29	477.87	478.05
	D	099+01.75	-7.29	477.89	478.10
	E	099+11.75	-7.29	477.91	478.11
	F	099+21.75	-7.29	477.92	478.09
	G	099+31.75	-7.29	477.91	478.05
	H	099+41.75	-7.29	477.91	477.99
	I	099+51.75	-7.29	477.89	477.93
	J	099+61.75	-7.29	477.86	477.88
CL Brg	Pier	099+68.00	-7.29	477.84	477.84
	K	099+78.00	-7.29	477.80	477.81
	L	099+88.00	-7.29	477.76	477.78
	M	099+98.00	-7.29	477.70	477.76
	N	100+08.00	-7.29	477.64	477.74
	O	100+18.00	-7.29	477.56	477.70
	P	100+28.00	-7.29	477.48	477.64
	Q	100+38.00	-7.29	477.40	477.55
	R	100+48.00	-7.29	477.30	477.44
	S	100+58.00	-7.29	477.19	477.30
	T	100+68.00	-7.29	477.08	477.14
CL Brg	S. Abut.	100+74.25	-7.29	477.01	477.01
BK.	S. Abut.	100+75.92	-7.29	476.98	476.98

GIRDER 8

Location		Station	Offset	Theoretical Grade Elevations	Theoretical Grade Elevations Adjusted for Dead Load Deflection
BK.	N. Abut.	098+61.08	1.38	477.56	477.56
CL Brg	N. Abut.	098+61.75	1.38	477.57	477.57
	A	098+71.75	1.38	477.61	477.69
	B	098+81.75	1.38	477.66	477.79
	C	098+91.75	1.38	477.69	477.87
	D	099+01.75	1.38	477.71	477.91
	E	099+11.75	1.38	477.73	477.93
	F	099+21.75	1.38	477.73	477.91
	G	099+31.75	1.38	477.73	477.87
	H	099+41.75	1.38	477.73	477.81
	I	099+51.75	1.38	477.71	477.75
	J	099+61.75	1.38	477.68	477.70
CL Brg	Pier	099+68.00	1.38	477.66	477.66
	K	099+78.00	1.38	477.62	477.63
	L	099+88.00	1.38	477.58	477.60
	M	099+98.00	1.38	477.52	477.58
	N	100+08.00	1.38	477.46	477.56
	O	100+18.00	1.38	477.38	477.52
	P	100+28.00	1.38	477.30	477.46
	Q	100+38.00	1.38	477.22	477.37
	R	100+48.00	1.38	477.12	477.26
	S	100+58.00	1.38	477.01	477.12
	T	100+68.00	1.38	476.90	476.96
CL Brg	S. Abut.	100+74.25	1.38	476.82	476.82
BK.	S. Abut.	100+75.92	1.38	476.80	476.80

GIRDER 9

Location		Station	Offset	Theoretical Grade Elevations	Theoretical Grade Elevations Adjusted for Dead Load Deflection
BK.	N. Abut.	098+61.08	10.04	477.38	477.38
CL Brg	N. Abut.	098+61.75	10.04	477.39	477.39
	A	098+71.75	10.04	477.43	477.51
	B	098+81.75	10.04	477.47	477.61
	C	098+91.75	10.04	477.51	477.69
	D	099+01.75	10.04	477.53	477.73
	E	099+11.75	10.04	477.55	477.75
	F	099+21.75	10.04	477.55	477.73
	G	099+31.75	10.04	477.55	477.69
	H	099+41.75	10.04	477.54	477.63
	I	099+51.75	10.04	477.53	477.57
	J	099+61.75	10.04	477.50	477.52
CL Brg	Pier	099+68.00	10.04	477.48	477.48
	K	099+78.00	10.04	477.44	477.45
	L	099+88.00	10.04	477.40	477.42
	M	099+98.00	10.04	477.34	477.40
	N	100+08.00	10.04	477.28	477.38
	O	100+18.00	10.04	477.20	477.34
	P	100+28.00	10.04	477.12	477.28
	Q	100+38.00	10.04	477.03	477.19
	R	100+48.00	10.04	476.94	477.08
	S	100+58.00	10.04	476.83	476.94
	T	100+68.00	10.04	476.72	476.78
CL Brg	S. Abut.	100+74.25	10.04	476.64	476.64
BK.	S. Abut.	100+75.92	10.04	476.62	476.62

GIRDER 10

Location		Station	Offset	Theoretical Grade Elevations	Theoretical Grade Elevations Adjusted for Dead Load Deflection
BK.	N. Abut.	098+61.08	18.71	477.20	477.20
CL Brg	N. Abut.	098+61.75	18.71	477.20	477.20
	A	098+71.75	18.71	477.25	477.33
	B	098+81.75	18.71	477.29	477.43
	C	098+91.75	18.71	477.33	477.51
	D	099+01.75	18.71	477.35	477.55
	E	099+11.75	18.71	477.37	477.57
	F	099+21.75	18.71	477.37	477.55
	G	099+31.75	18.71	477.37	477.51
	H	099+41.75	18.71	477.36	477.45
	I	099+51.75	18.71	477.35	477.39
	J	099+61.75	18.71	477.32	477.34
CL Brg	Pier	099+68.00	18.71	477.30	477.30
	K	099+78.00	18.71	477.26	477.27
	L	099+88.00	18.71	477.21	477.24
	M	099+98.00	18.71	477.16	477.22
	N	100+06.00	18.71	477.10	477.20
	O	100+18.00	18.71	477.02	477.16
	P	100+28.00	18.71	476.94	477.10
	Q	100+38.00	18.71	476.85	477.01
	R	100+48.00	18.71	476.76	476.90
	S	100+58.00	18.71	476.65	476.76
	T	100+68.00	18.71	476.54	476.60
CL Brg	S. Abut.	100+74.25	18.71	476.46	476.46
BK.	S. Abut.	100+75.92	18.71	476.44	476.44

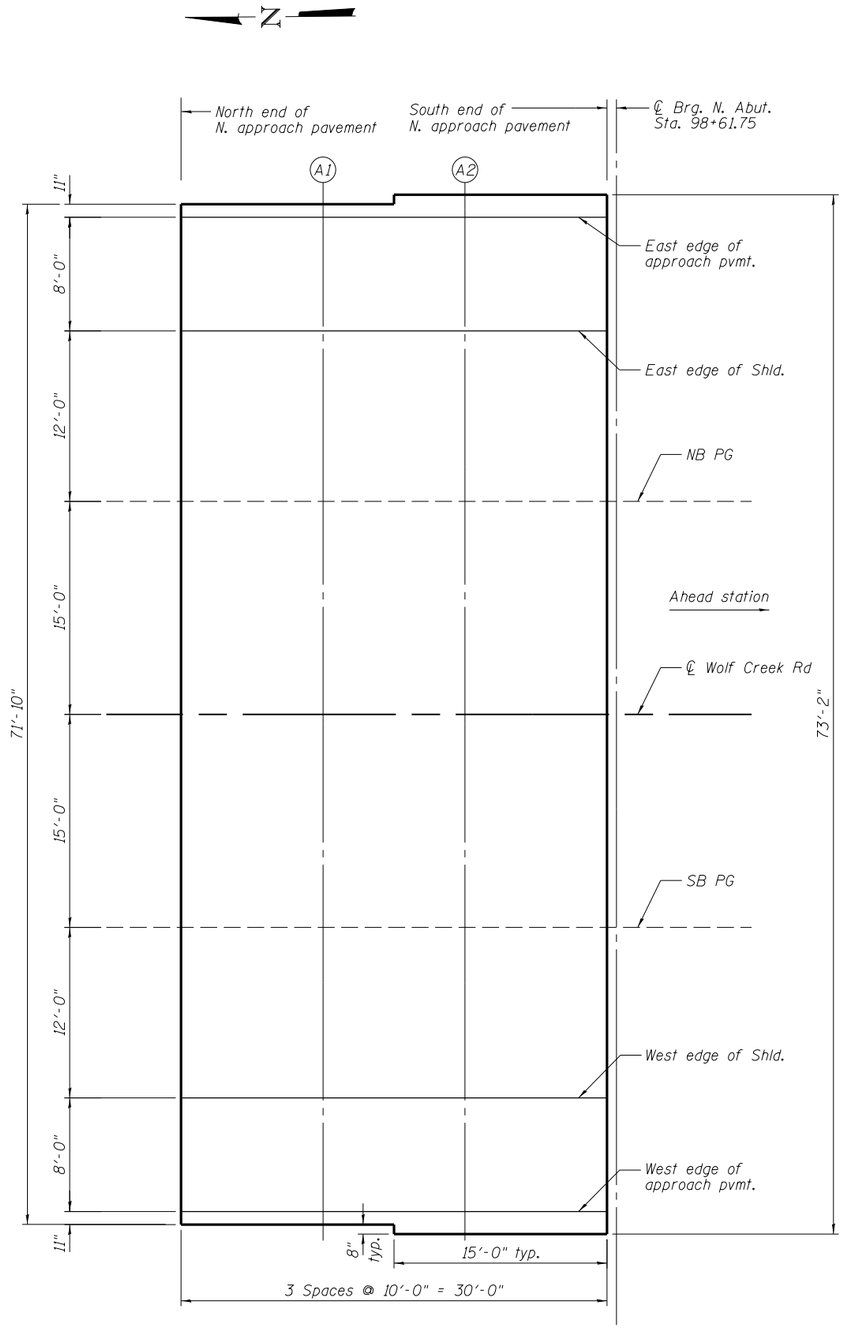

PLAN

EAST EDGE OF PAVEMENT = WEST EDGE OF PAVEMENT

Location		Station	Offset	Theoretical Grade Elevations
N. End	N Appr. Pvt	098+31.08	20.00	476.98
	A1	098+41.08	20.00	477.05
	A2	098+51.08	20.00	477.12
S. End	N Appr. Pvt	098+61.08	20.00	477.17

EAST EDGE OF SHOULDER = WEST EDGE OF SHOULDER

Location		Station	Offset	Theoretical Grade Elevations
N. End	N Appr. Pvt	098+31.08	12.00	477.14
	A1	098+41.08	12.00	477.22
	A2	098+51.08	12.00	477.28
S. End	N Appr. Pvt	098+61.08	12.00	477.34

NB = SB PROFILE GRADE LINE

Location		Station	Offset	Theoretical Grade Elevations
N. End	N Appr. Pvt	098+31.08	0.00	477.39
	A1	098+41.08	0.00	477.47
	A2	098+51.08	0.00	477.53
S. End	N Appr. Pvt	098+61.08	0.00	477.59

CL OF WOLF CREEK ROAD

Location		Station	Offset	Theoretical Grade Elevations
N. End	N Appr. Pvt	098+31.08	15.00	477.71
	A1	098+41.08	15.00	477.78
	A2	098+51.08	15.00	477.85
S. End	N Appr. Pvt	098+61.08	15.00	477.90

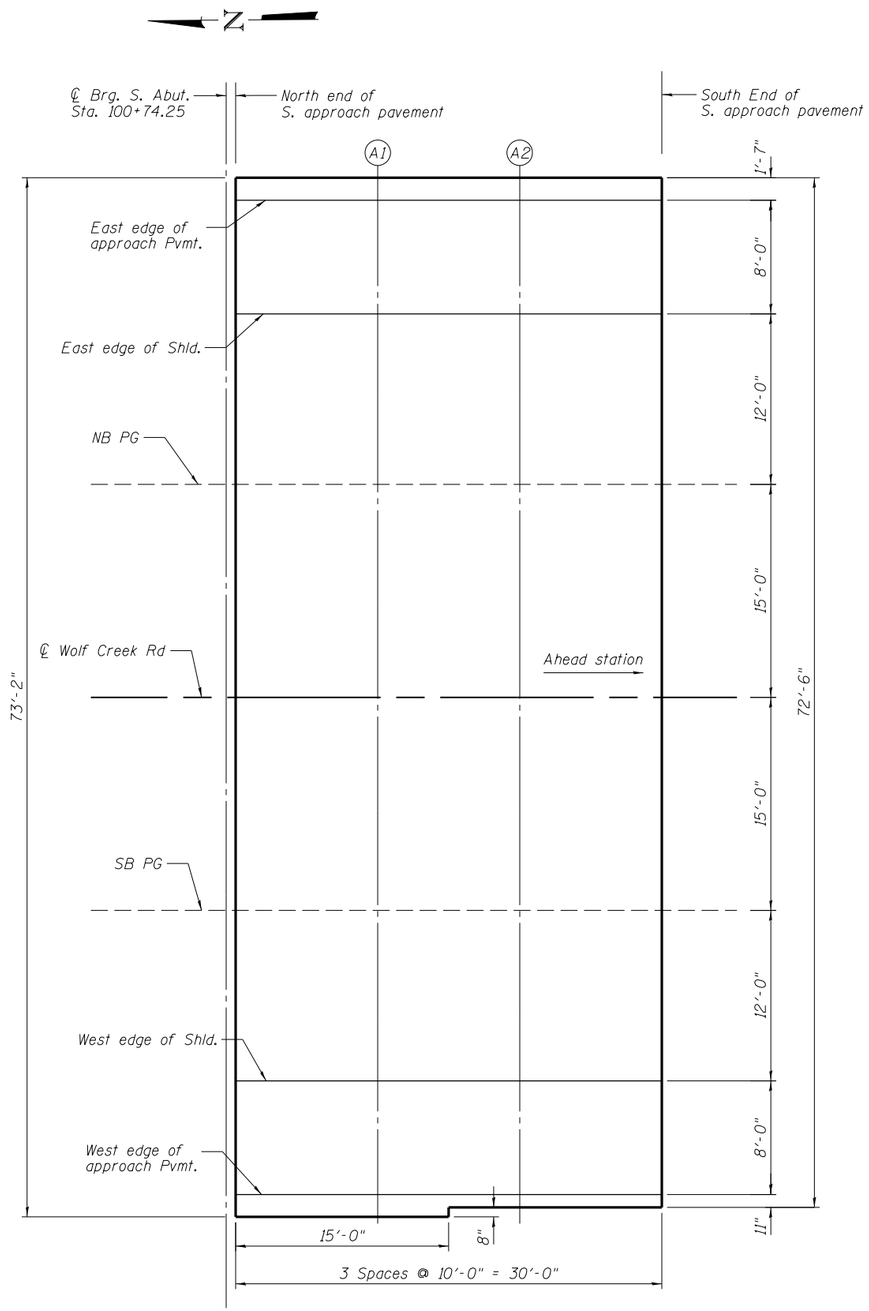

PLAN

EAST EDGE OF PAVEMENT = WEST EDGE OF PAVEMENT

Location		Station	Offset	Theoretical Grade Elevations
N. End	S Appr. Pvt	100+74.92	20.00	476.43
	A1	100+84.92	20.00	476.30
	A2	100+94.92	20.00	476.17
S. End	S Appr. Pvt	101+04.92	20.00	476.02

EAST EDGE OF SHOULDER = WEST EDGE OF SHOULDER

Location		Station	Offset	Theoretical Grade Elevations
N. End	S Appr. Pvt	100+74.92	12.00	476.60
	A1	100+84.92	12.00	476.47
	A2	100+94.92	12.00	476.33
S. End	S Appr. Pvt	101+04.92	12.00	476.19

NB = SB PROFILE GRADE LINE

Location		Station	Offset	Theoretical Grade Elevations
N. End	S Appr. Pvt	100+74.92	0.00	476.85
	A1	100+84.92	0.00	476.72
	A2	100+94.92	0.00	476.58
S. End	S Appr. Pvt	101+04.92	0.00	476.44

CL OF WOLF CREEK ROAD

Location		Station	Offset	Theoretical Grade Elevations
N. End	S Appr. Pvt	100+74.92	15.00	477.16
	A1	100+84.92	15.00	477.03
	A2	100+94.92	15.00	476.89
S. End	S Appr. Pvt	101+04.92	15.00	476.75

Notes:
See Sheet 10 of 27 for superstructure details and Bill of Material.
Bars indicated thus 20 x 3-#5 etc. indicates 20 lines of bars with 3 lengths per line.
See Sheet 10 of 27 for parapet reinforcement.
When the deck pour is stopped for the day at one or more of the transverse bonded construction joints in the deck pouring sequence as shown, the next pour shall not be made until both of the following are met:
1) At least 72 hours shall have elapsed from the end of the previous pour.
2) The concrete strength shall have attained a minimum flexural strength of 650 psi or a minimum compressive strength of 3500 psi.

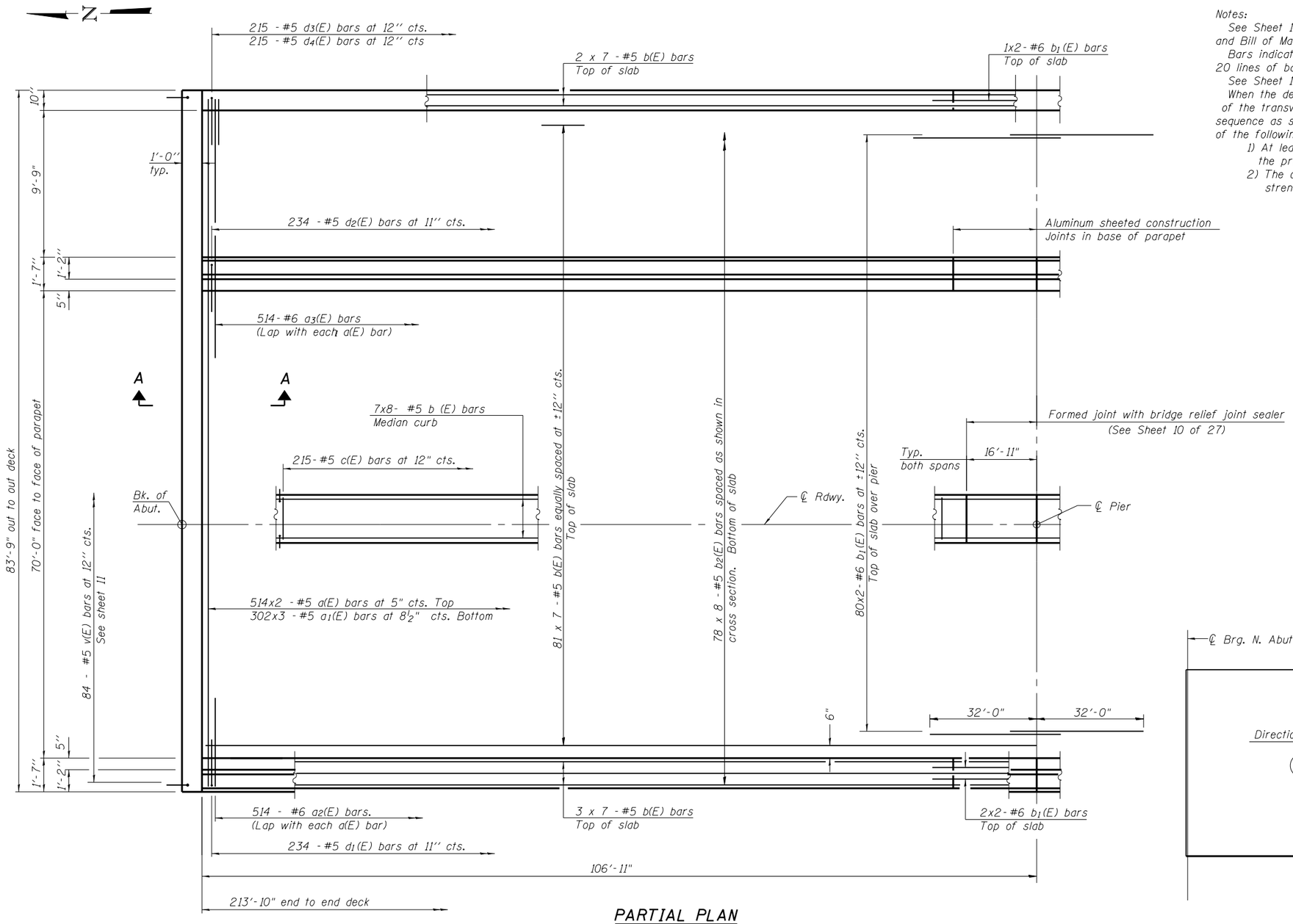

PARTIAL PLAN

MINIMUM BAR LAP

(Slab)
#5 = 3'-3"
#6 = 3'-10"

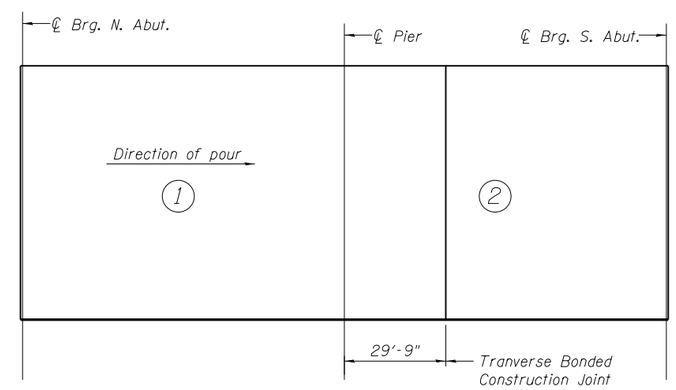

DECK POURING SEQUENCE

FILE NAME = c:\pw_work\pwidot\lavenderba\d0363618\D000099-978221-008-Super.dgn	USER NAME = $USER$	DESIGNED - DF	REVISED -	STATE OF ILLINOIS DEPARTMENT OF TRANSPORTATION	DECK PLAN STRUCTURE NO. 100-0099	F.A.P. RTE.	SECTION	COUNTY	TOTAL SHEETS	SHEET NO.
		CHECKED - JE	REVISED -			331	(1-3)R-2,_N-4,_TS-4,_HBK-1	WILLIAMSON	733	365
CH2MHILL®	PLOT SCALE = 0.1667 ' / in.	DRAWN - AK	REVISED -			DRAWING NO. BR-08		CONTRACT NO. 78221		
	PLOT DATE = 1/31/2014	CHECKED - JE	REVISED -		SHEET NO. 8 OF 27 SHEETS		ILLINOIS FED. AID PROJECT			

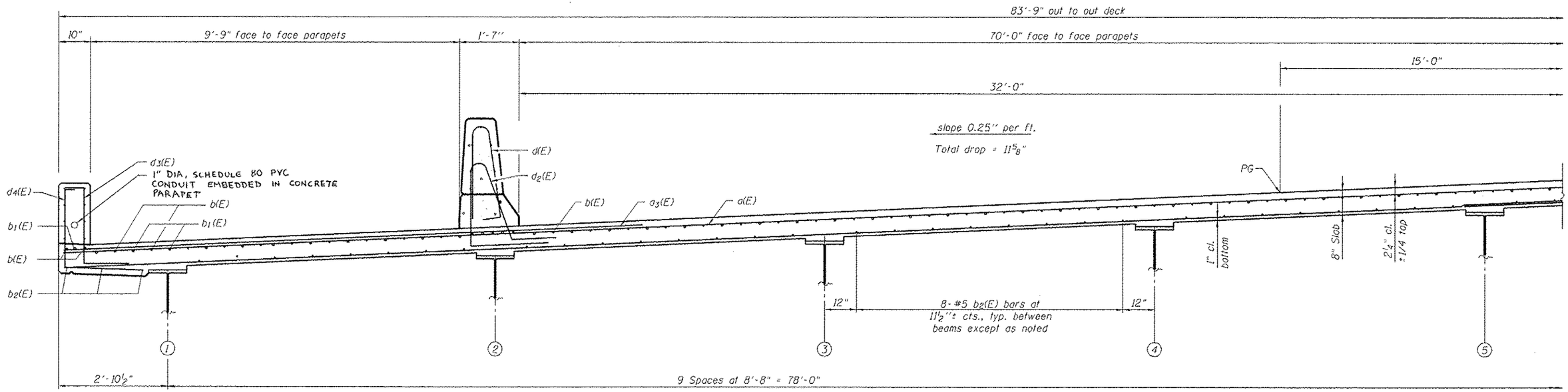

NEAR PIER

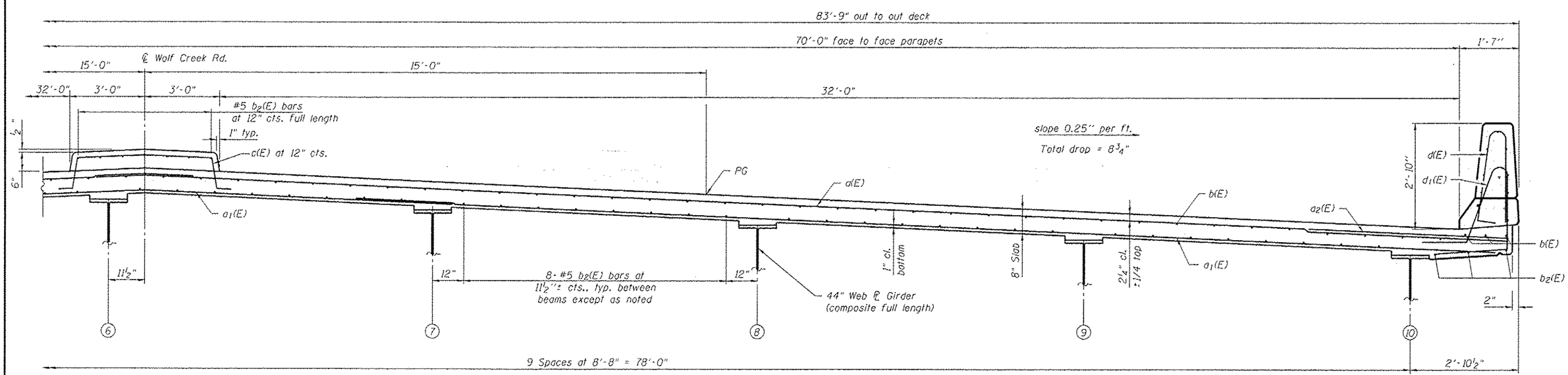

NEAR MIDSPAN

MINIMUM BAR LAP
(Slab)
#5 bar = 2'-7"

CROSS SECTION
(Looking South)

FILE NAME = c:\pw_work\pwidot\lavenderba\d0363618\1100099-978221-009-Super.dgn	USER NAME = $USER$	DESIGNED - DF	REVISED -	STATE OF ILLINOIS DEPARTMENT OF TRANSPORTATION	DECK CROSS SECTION STRUCTURE NO. 100-0099
CH2MHILL		CHECKED - JE	REVISED -		
	PLOT SCALE = 0.1667 ' / in.	DRAWN - AK	REVISED -		
	PLOT DATE = 1/31/2014	CHECKED - JE	REVISED -		SHEET NO. 9 OF 27 SHEETS

F.A.P. RTE.	SECTION	COUNTY	TOTAL SHEETS	SHEET NO.
331	(1-3)R-2,_N-4,_TS-4,_HBK-1	WILLIAMSON	733	366
DRAWING NO.	BR-09	CONTRACT NO. 78221		
		ILLINOIS FED. AID PROJECT		

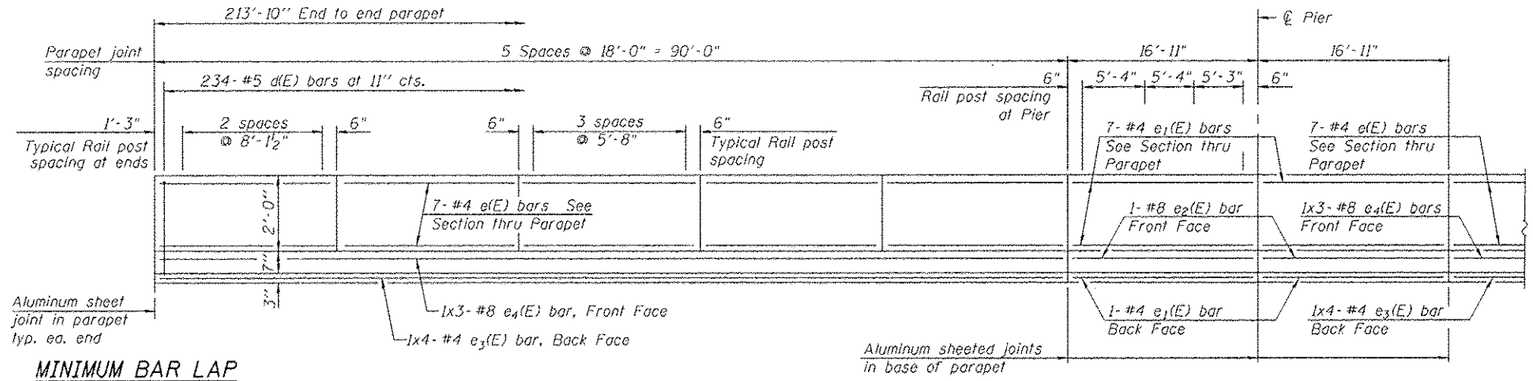

INSIDE ELEVATION OF PARAPET

MINIMUM BAR LAP

(Parapet)

#4 bar = 2'-0"
#5 bar = 2'-7"
#8 bar = 5'-2"

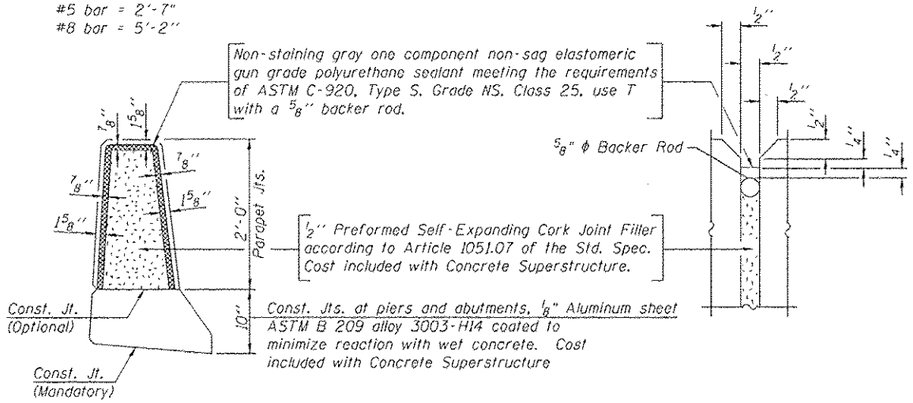

PARAPET JOINT DETAILS

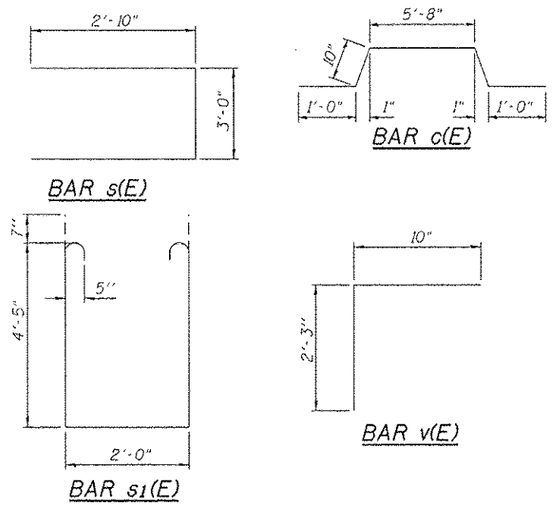

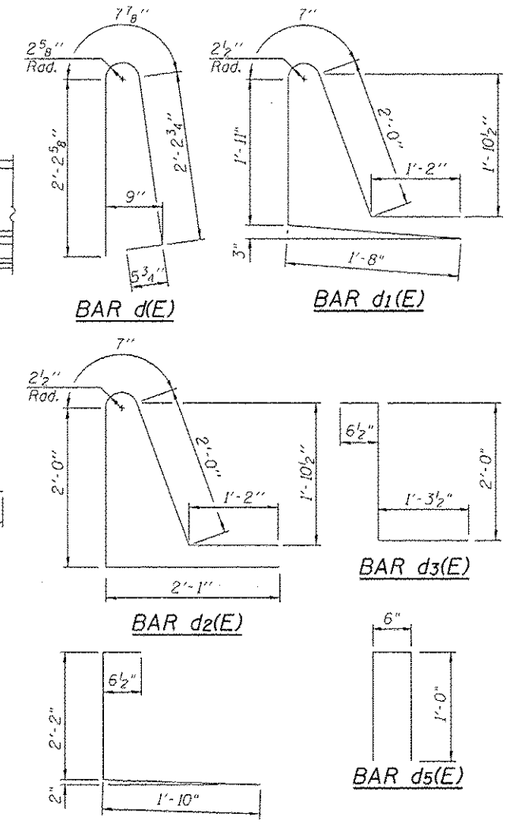

SUPERSTRUCTURE BILL OF MATERIAL

Bar	No.	Size	Length	Shape
a(E)	1028	#5	43'-6"	
a1(E)	906	#5	30'-1"	
a2(E)	514	#6	6'-6"	
a3(E)	514	#6	15'-3"	
b(E)	602	#5	33'-4"	
b1(E)	166	#6	34'-0"	
b2(E)	680	#5	29'-7"	
c(E)	215	#5	9'-4"	
d(E)	468	#5	5'-7"	
d1(E)	234	#5	7'-4"	
d2(E)	234	#5	7'-10"	
d3(E)	215	#5	3'-10"	
d4(E)	215	#5	4'-7"	
d5(E)	244	#4	2'-6"	
e(E)	220	#4	17'-8"	
e1(E)	48	#4	16'-7"	
e2(E)	4	#8	16'-7"	
e3(E)	16	#4	24'-5"	
e4(E)	12	#8	33'-5"	
m(E)	24	#6	30'-6"	
m1(E)	72	#6	8'-4"	
m2(E)	16	#6	2'-6"	
m3(E)	80	#5	4'-0"	
s(E)	174	#5	8'-8"	
s1(E)	156	#5	12'-0"	
v(E)	168	#5	3'-1"	
Reinforcement Bars, Epoxy Coated			Pound	164,160
Concrete Superstructure			Cu. Yd.	631.8
Bridge Deck Grooving			Sq. Yd.	1426
Protective Coat			Sq. Yd.	2157.0
Staining Concrete Structures			Sq. Ft.	2205

Bars indicated thus 1 x 2 - #5 etc. indicates 1 line of bars with 2 lengths per line.

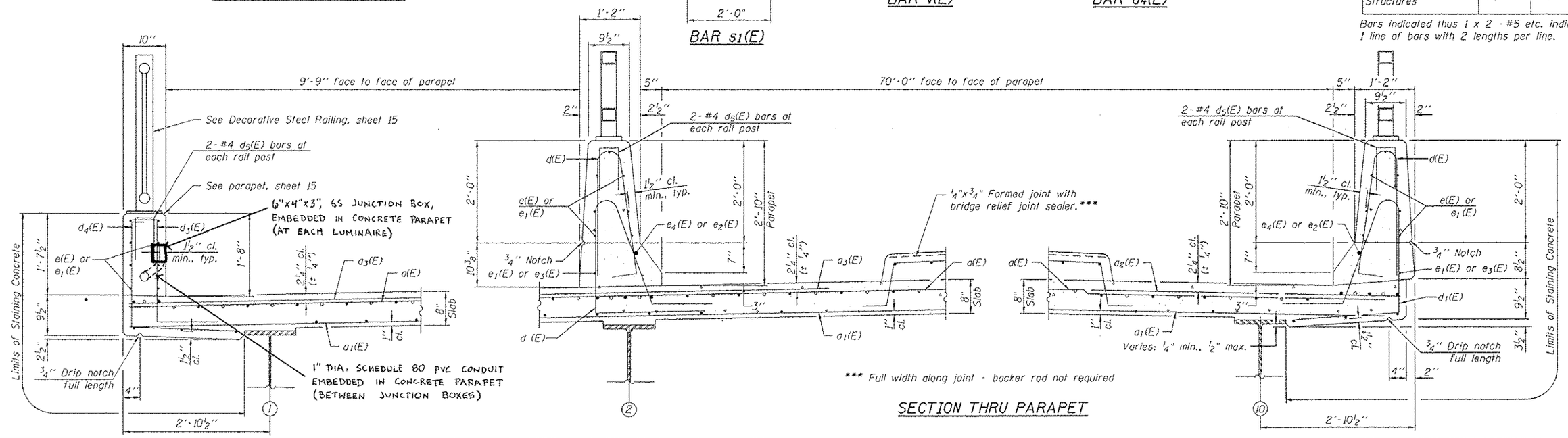

SECTION THRU PARAPET

FILE NAME = 1000899-978221-010-Super.dgn	USER NAME = mfox	DESIGNED - DF	REVISED -	STATE OF ILLINOIS DEPARTMENT OF TRANSPORTATION	SUPERSTRUCTURE DETAILS STRUCTURE NO. 100-0099	F.A.P. RTE.	SECTION	COUNTY	TOTAL SHEETS	SHEET NO.
CH2MHILL		CHECKED - JE	REVISED -			331	(1-3)R-2,,N-4,,TS-4,,HBK-1	WILLIAMSON	733	367
	PLOT SCALE = 0.1667 ' / in.	DRAWN - AK	REVISED -		SHEET NO. 10 OF 27 SHEETS	DRAWING NO. BR-10		CONTRACT NO. 78221		
	PLOT DATE = 3/12/2014	CHECKED - JE	REVISED -			ILLINOIS FED. AID PROJECT				

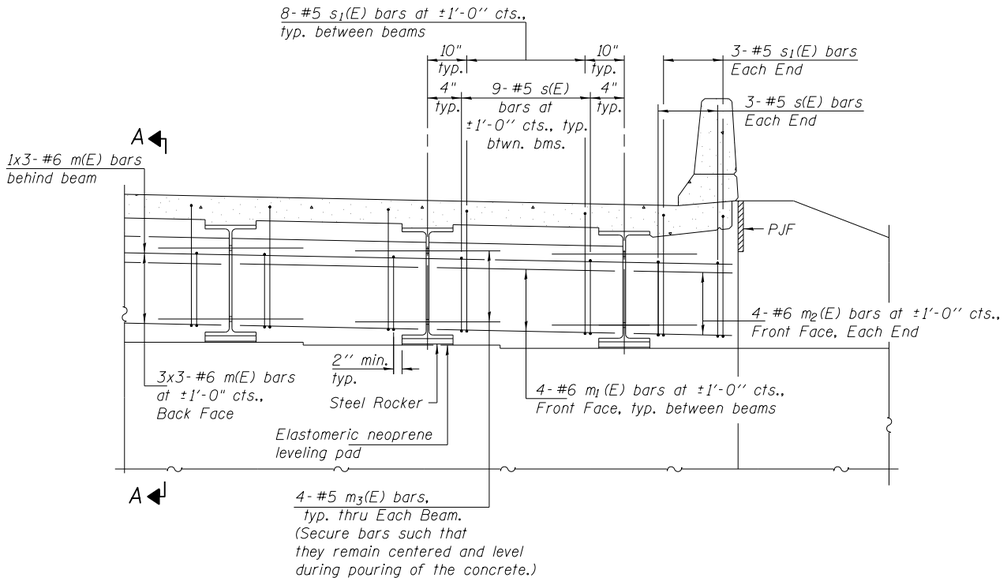

DIAPHRAGM ELEVATION AT ABUTMENT

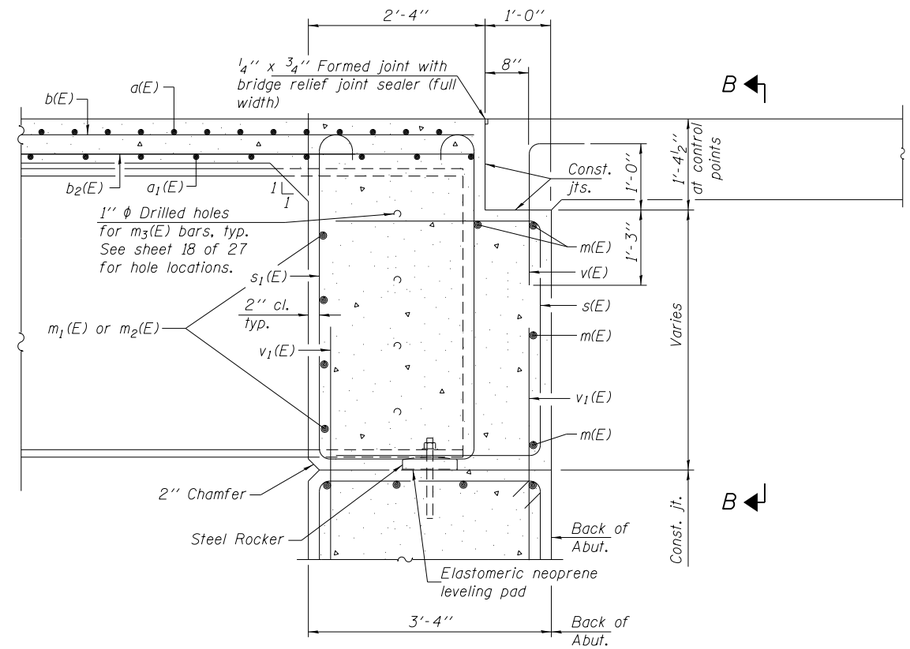

SECTION A-A

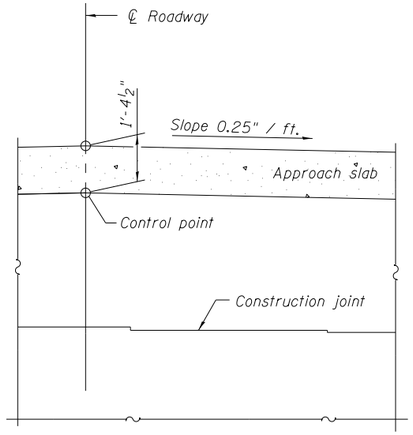

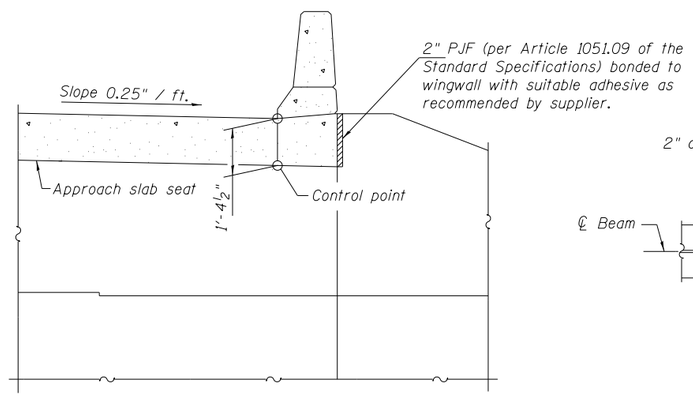

SECTION B-B

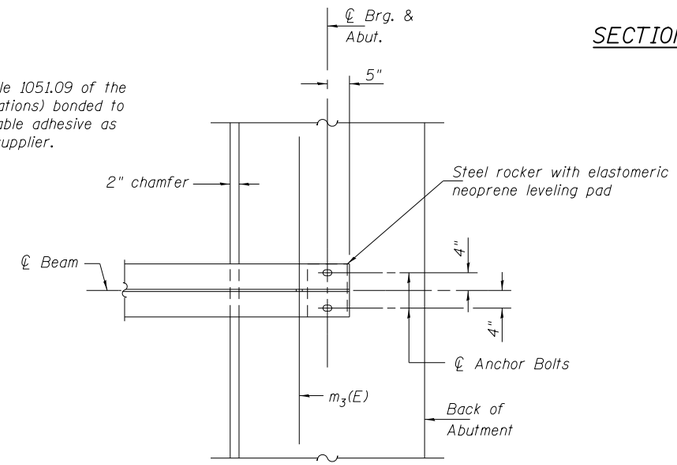

PARTIAL PLAN AT ABUTMENT

(Showing bottom flange of beam)

MIN. BAR LAP

#6 bar = 3'-10"

Notes:

Reinforcement bars in diaphragm are billed with superstructure on sheet 10 of 27.

Concrete in diaphragm is included with Concrete Superstructure on sheet 10 of 27.

For details of bars s(E), s_1(E) and v(E) see sheet 10 of 27.

The approach slab seat shall have a constant slope determined from the control points shown.

For bearing details see sheet 19 of 27.

ABUTMENT CONTROL POINT ELEVATIONS

LOCATION	WEST	PG	EAST
N. ABUT.	475.79	476.21	475.55
S. ABUT	475.04	475.45	474.80

DSI-2440-0 8-31-12

FILE NAME = 1000099-978221-019-Diaphragm.dgn	USER NAME = mfox	DESIGNED - DF	REVISED -	STATE OF ILLINOIS DEPARTMENT OF TRANSPORTATION	INTEGRAL ABUTMENT DIAPHRAGM DETAILS STRUCTURE NO. 100-0099	F.A.P. RTE.	SECTION	COUNTY	TOTAL SHEETS	SHEET NO.
		CHECKED - MN	REVISED -			331	(1-3)R-2,_N-4,_TS-4,_HBK-1	WILLIAMSON	733	368
CH2MHILL®	PLOT SCALE = 0.1667 ' / in.	DRAWN - AK	REVISED -			DRAWING NO. BR-11		CONTRACT NO. 78221		
	PLOT DATE = 2/28/2014	CHECKED - JE	REVISED -		SHEET NO. 11 OF 27 SHEETS	ILLINOIS FED. AID PROJECT				

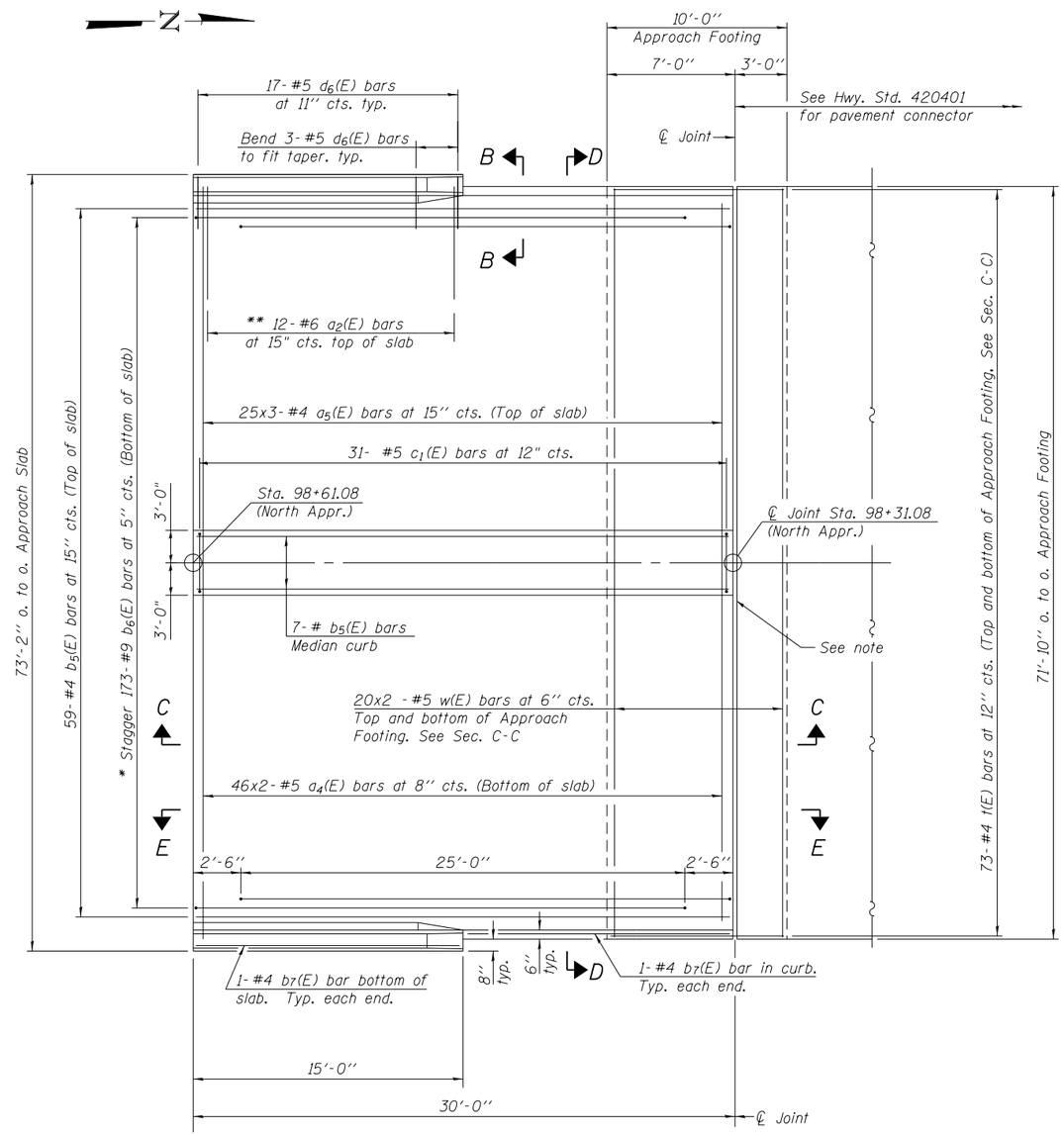

PLAN

(North Approach)

* Tilt #9 b_6(E) bars as required to maintain clearance.
** Space between a_3(E) bars. Typ. each parapet.

MINIMUM BAR LAP

(Approach Slab)
#4 = 2'-4"
#5 = 3'-3"

Notes:
See sheet 14 of 27 for Sections C-C & D-D and View E-E.
a_3(E) and a_4(E) bar spacings measured along ℄ Rdwy.
Install $\frac{1}{4}$"x$\frac{3}{4}$" Formed joint with bridge joint sealer full width of median both ends. See sheet 10 of 27.

*** Cost included with Concrete Superstructure.

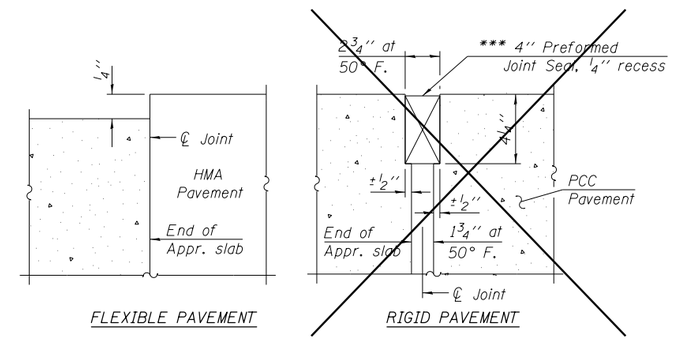

DETAIL A

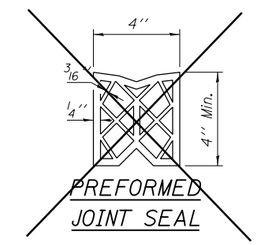

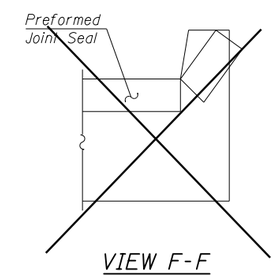

Angle Preformed Joint Seal at 45° at curbs when req'd for drainage.

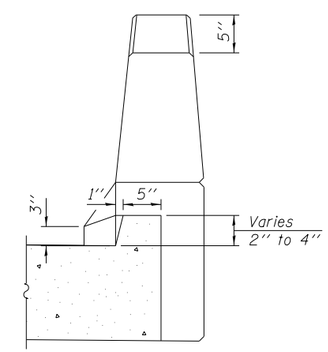

FILE NAME = 1000099-978221-011-Appr_Slab.dgn	USER NAME = mfox	DESIGNED - DF	REVISED -	STATE OF ILLINOIS DEPARTMENT OF TRANSPORTATION	BRIDGE APPROACH SLAB DETAILS I STRUCTURE NO. 100-0099	F.A.P. RTE.	SECTION	COUNTY	TOTAL SHEETS / SHEET NO.
		CHECKED - JE	REVISED -			331	(1-3)R-2,_N-4,_TS-4,_HBK-1	WILLIAMSON	733 / 369
CH2MHILL®	PLOT SCALE = 0:2.0000 ':' / in.	DRAWN - AK	REVISED -			DRAWING NO. BR-12		CONTRACT NO. 78221	
	PLOT DATE = 2/28/2014	CHECKED - JE	REVISED -		SHEET NO. 12 OF 27 SHEETS	ILLINOIS FED. AID PROJECT			

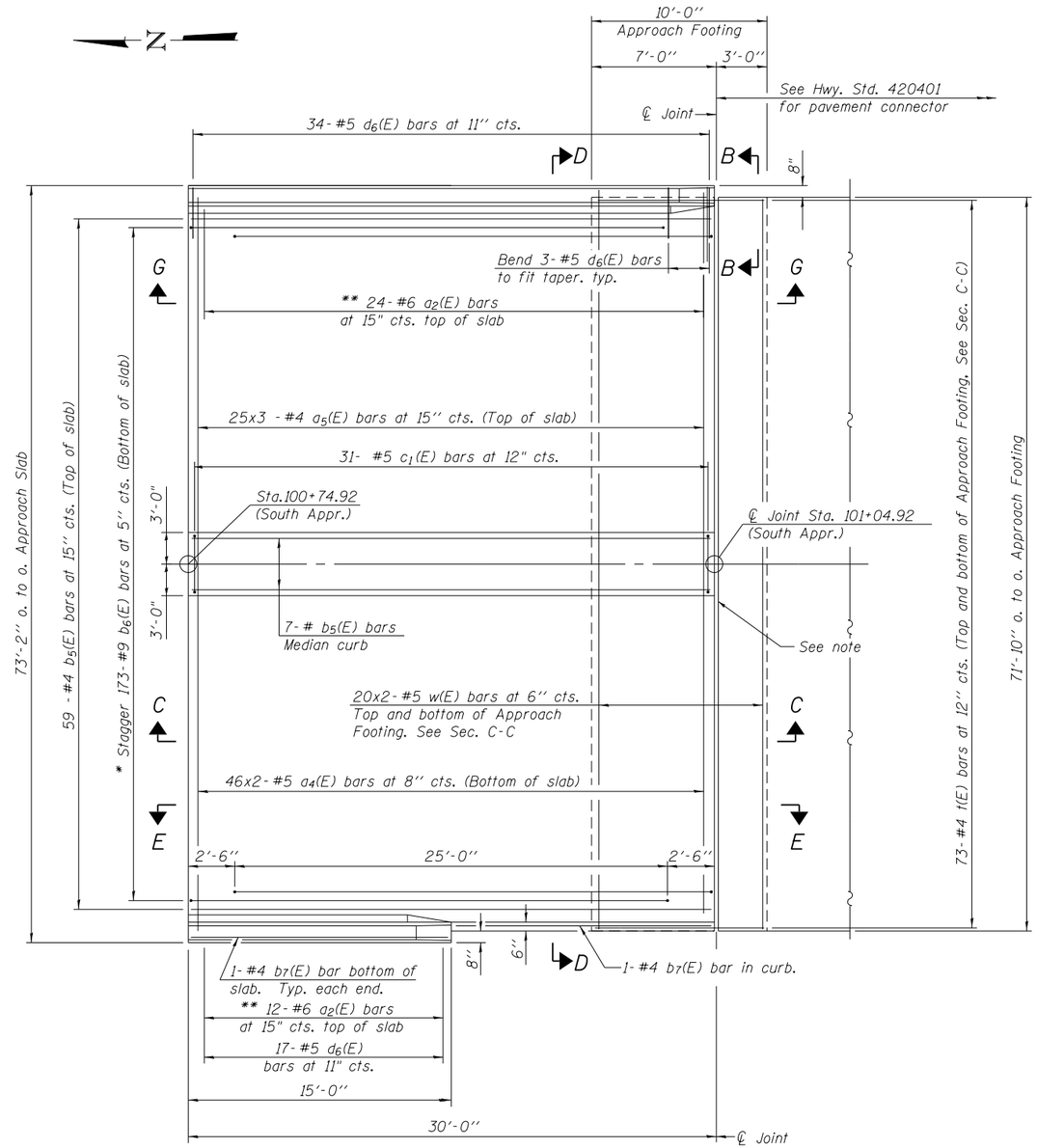

PLAN

(South Approach)

* Tilt #9 b_6(E) bars as required to maintain clearance.
** Space between a_3(E) bars, Typ. each parapet.

MINIMUM BAR LAP

(Approach Slab)
#4 = 2'-4"
#5 = 3'-3"

Notes:
See sheet 14 of 27 for Sections C-C & D-D and View E-E.
a_3(E) and a_4(E) bar spacings measured along ℄ Rdwy.
Install $\frac{1}{4}$"x$\frac{3}{4}$" Formed joint with bridge joint sealer full width of median both ends. See sheet 10 of 27.

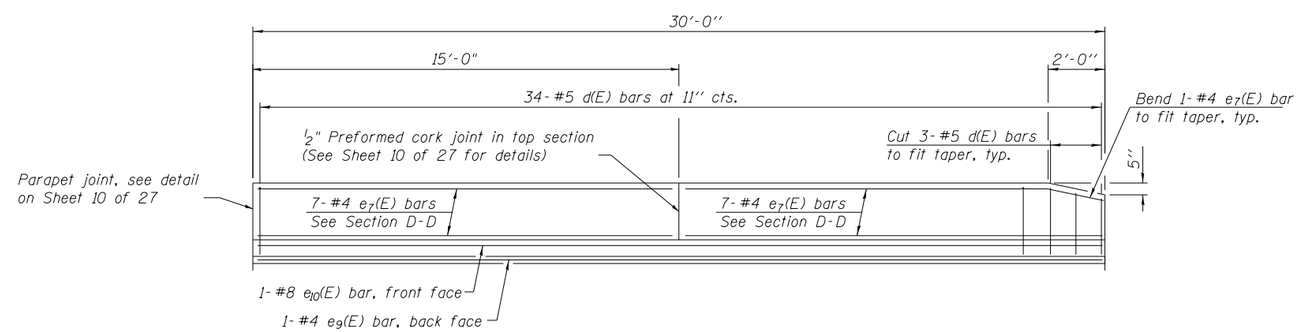

VIEW G-G

FILE NAME = 1000099-978221-012-Appr_Slab.dgn	USER NAME = mfox	DESIGNED - DF	REVISED -
CH2MHILL®		CHECKED - JE	REVISED -
	PLOT SCALE = 0:2.0000 ':' / in.	DRAWN - AK	REVISED -
	PLOT DATE = 2/28/2014	CHECKED - JE	REVISED -

STATE OF ILLINOIS
DEPARTMENT OF TRANSPORTATION

BRIDGE APPROACH SLAB DETAILS II
STRUCTURE NO. 100-0099

SHEET NO. 13 OF 27 SHEETS

F.A.P. RTE.	SECTION	COUNTY	TOTAL SHEETS	SHEET NO.
331	(1-3)R-2,_N-4,_TS-4,_HBK-1	WILLIAMSON	733	370
DRAWING NO. BR-13		CONTRACT NO. 78221		
		ILLINOIS FED. AID PROJECT		

Notes:
See sheet 12 of 27 for Detail A and View B-B.
Approach slab and parapet concrete shall be paid for as Concrete Superstructure.
Approach footing concrete shall be paid for as Concrete Structures.
Reinforcement shall be paid for as Reinforcement Bars, Epoxy Coated.
For v(E) bar details, see sheet 10 of 27.
The approach footing maximum applied service bearing pressure (Qmax) =2.0 ksf.
Cost of excavation for approach footing included with Concrete Structures.
For Granular Backfill For Structures and drainage treatment details, see sheet 2 of 27.
For additional parapet details, see sheet 10 of 27.

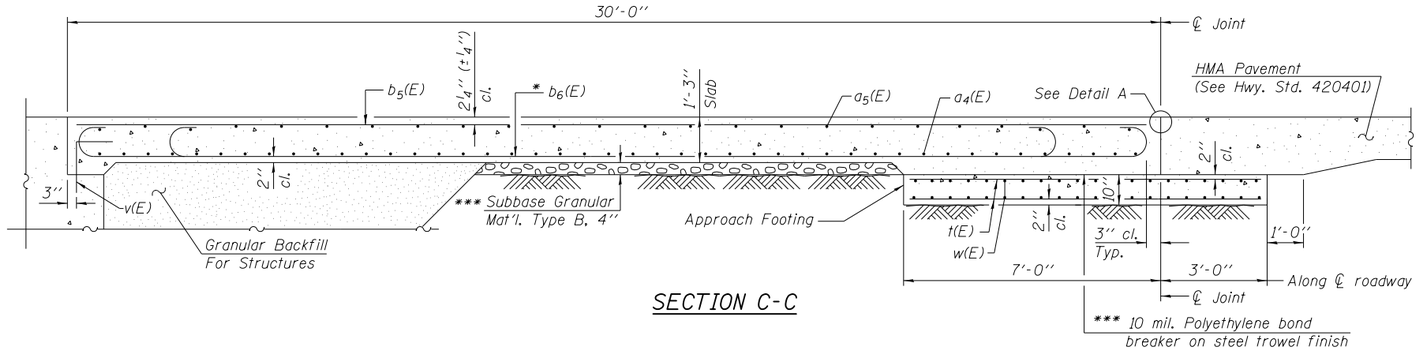

SECTION C-C

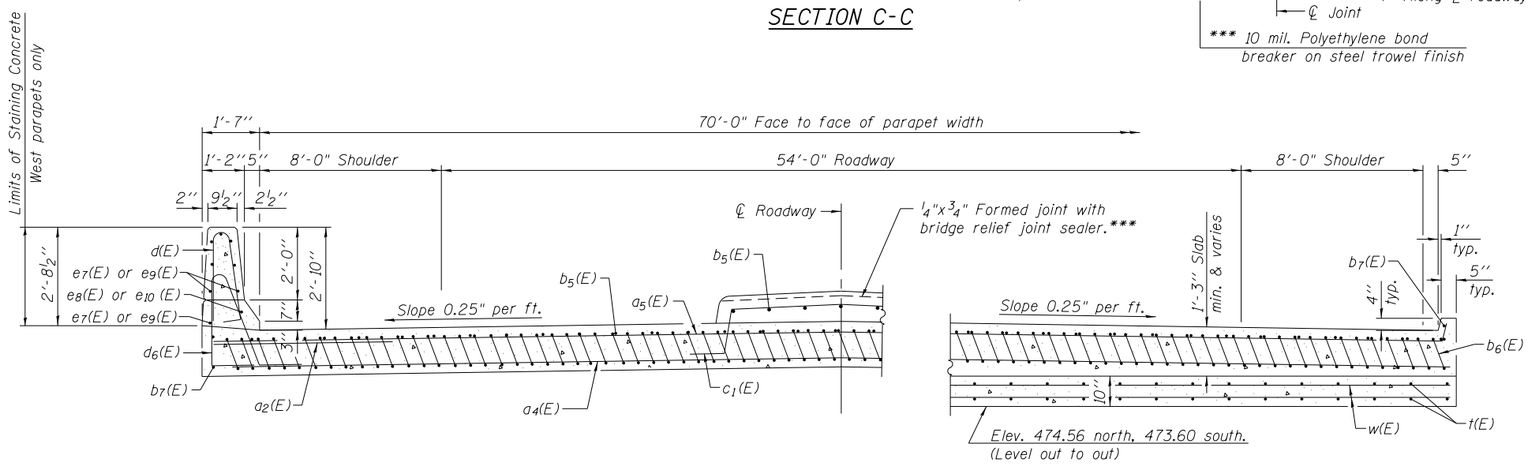

SECTION D-D
(See Plan for dimensions not shown)

*** Full width along joint - backer rod not required

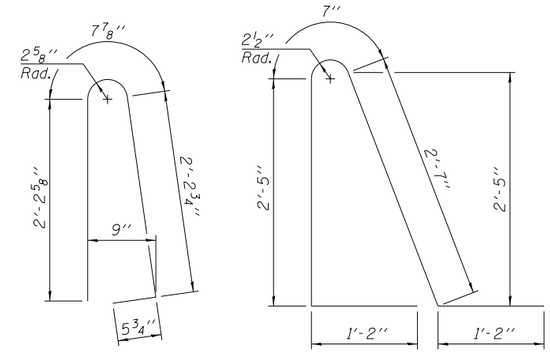

BAR d(E)

BAR d_6(E)

* Tilt #9 b_6(E) bars as required to maintain clearance.

*** Cost included with Concrete Superstructure.

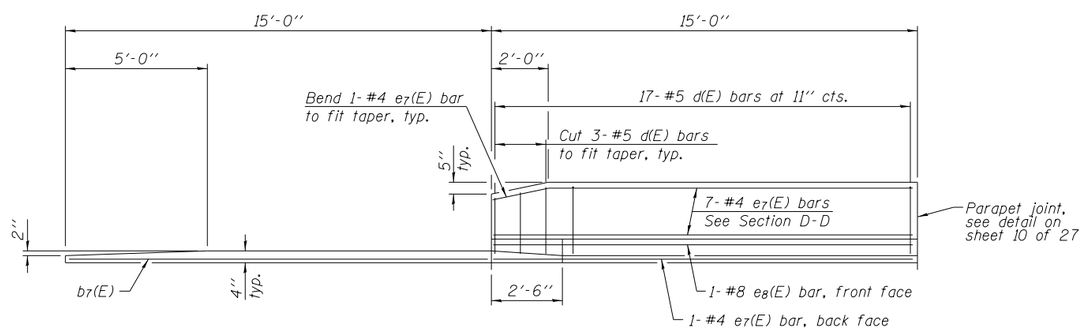

VIEW E-E

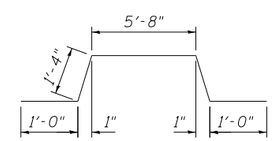

BAR c_1(E)

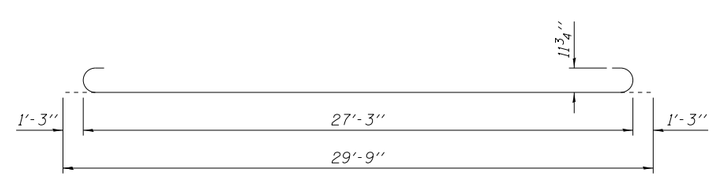

BAR b_6(E)

TWO APPROACHES
BILL OF MATERIAL

Bar	No.	Size	Length	Shape
a_2(E)	60	#6	6'-6"	
a_4(E)	184	#5	38'-1"	
a_5(E)	150	#4	25'-10"	
b_5(E)	132	#4	29'-8"	
b_6(E)	346	#9	29'-9"	
b_7(E)	6	#4	14'-8"	
c_1(E)	62	#5	10'-4"	
d(E)	85	#5	5'-7"	
d_6(E)	85	#5	7'-11"	
e_7(E)	38	#4	14'-8"	
e_8(E)	3	#8	14'-8"	
e_9(E)	1	#4	29'-8"	
e_{10} (E)	1	#8	29'-8"	
t(E)	292	#4	9'-8"	
w(E)	160	#5	37'-5"	
Concrete Superstructure			Cu. Yd.	228.3
Concrete Structures			Cu. Yd.	44.3
Bridge Deck Grooving			Sq. Yd.	400
Protective Coat			Sq. Yd.	504.7
Reinforcement Bars, Epoxy Coated			Pound	58,740
Staining Concrete Structures			Sq. Ft.	81

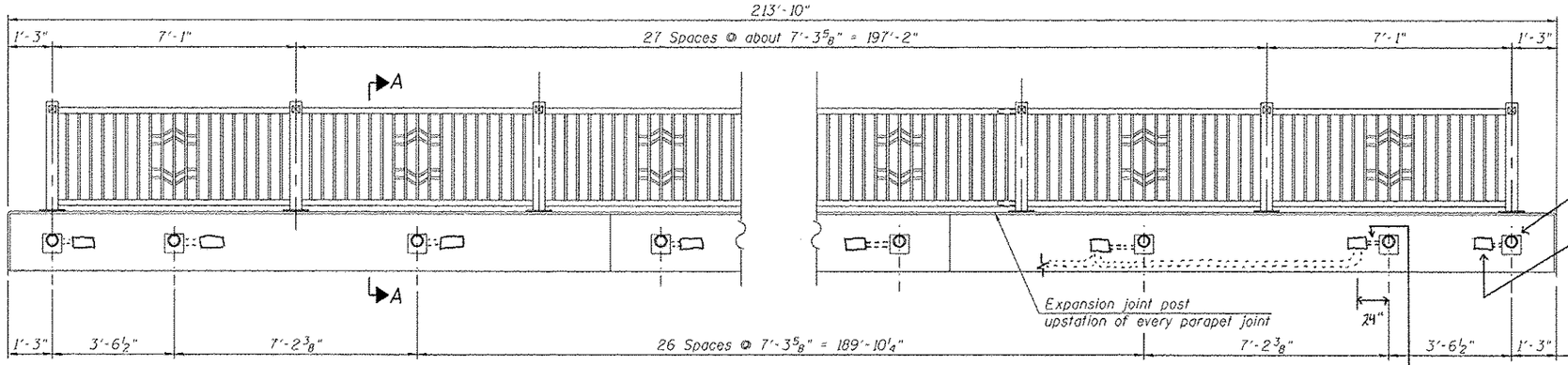

INSIDE ELEVATION OF PARAPET

Notes:
See Parapet Joint Details on sheet 10.
All posts, railings, splices, anchor devices, and bent plates shall be painted per project specifications.

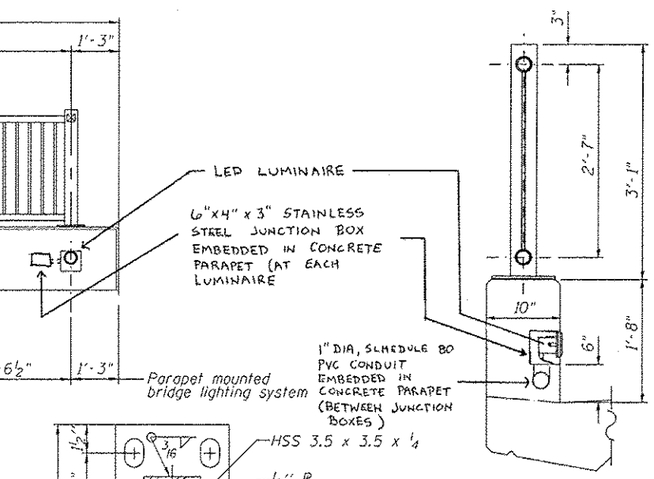

SECTION A-A

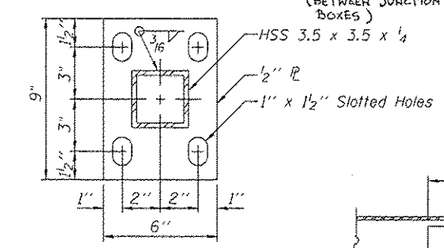

BASE PL

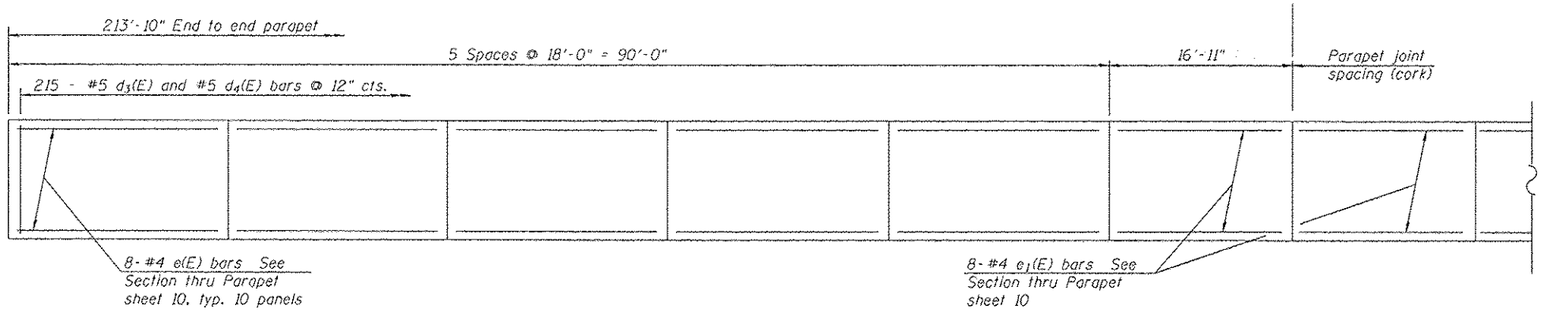

INSIDE ELEVATION OF PARAPET REINFORCING

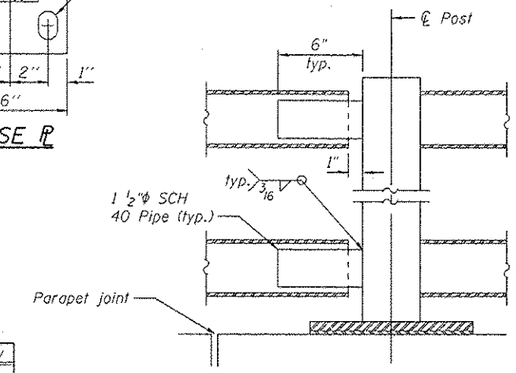

EXPANSION JOINT POST

BILL OF MATERIAL

Item	Unit	Quantity
Decorative Steel Railing	Foot	211
Parapet Mounted Bridge Lighting System	Lump Sum	1

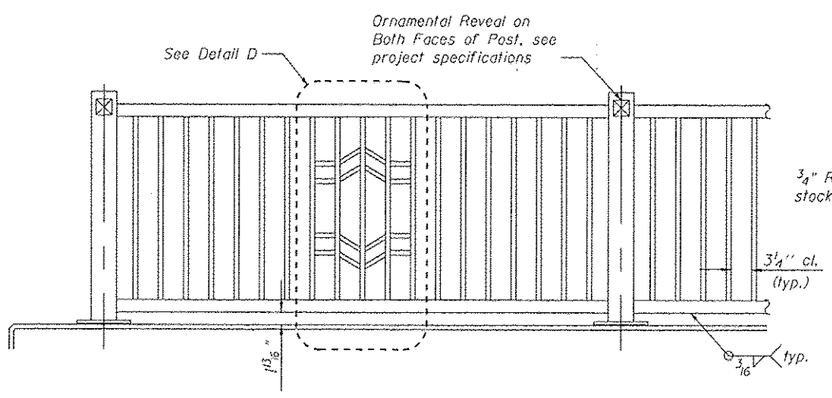

DECORATIVE STEEL RAILING ELEVATION

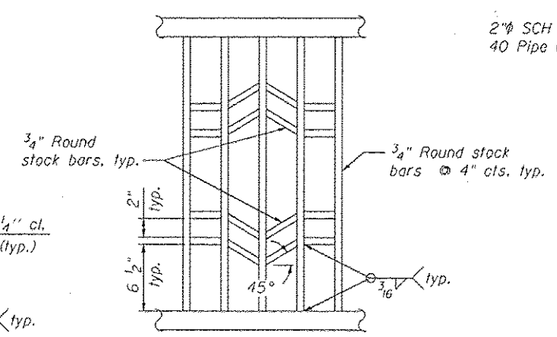

DETAIL D

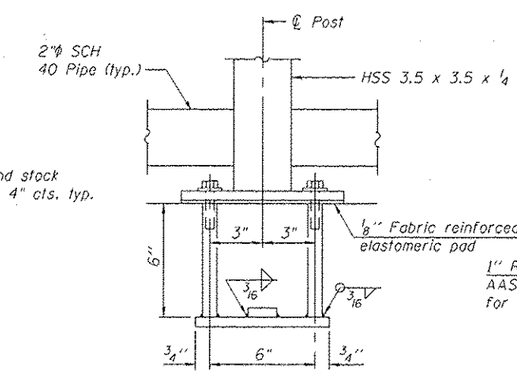

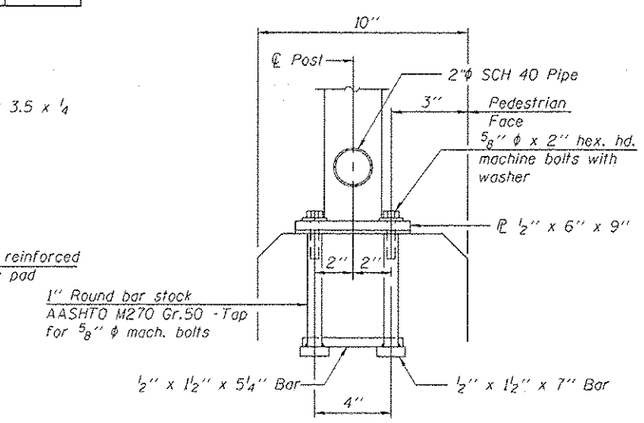

DECORATIVE STEEL RAILING ANCHOR BOLT DETAILS

In lieu of the cast-in-place anchor device shown, the Contractor has the option of drilling and setting 5/8" Φ anchor rods according to Article 509.06 of the Standard Specifications. Embedment shall be according to the manufacturer's specifications.

FILE NAME = 1080099-978221-014-Bridge_Railing.dgn	USER NAME = mfox	DESIGNED - DF	REVISED -
		CHECKED - JE	REVISED -
	PLOT SCALE = 0:2.0000 ':' / in.	DRAWN - AK	REVISED -
	PLOT DATE = 2/27/2014	CHECKED - JE	REVISED -

CH2MHILL.

STATE OF ILLINOIS
DEPARTMENT OF TRANSPORTATION

BRIDGE RAILING DETAILS I
STRUCTURE NO. 100-0099

SHEET NO. 15 OF 27 SHEETS

F.A.P. RTE.	SECTION	COUNTY	TOTAL SHEETS	SHEET NO.
331	(1-3)R-2, N-4, TS-4, HBK-1	WILLIAMSON	733	372
DRAWING NO. BR-15		CONTRACT NO. 78221		
		ILLINOIS FED. AID PROJECT		

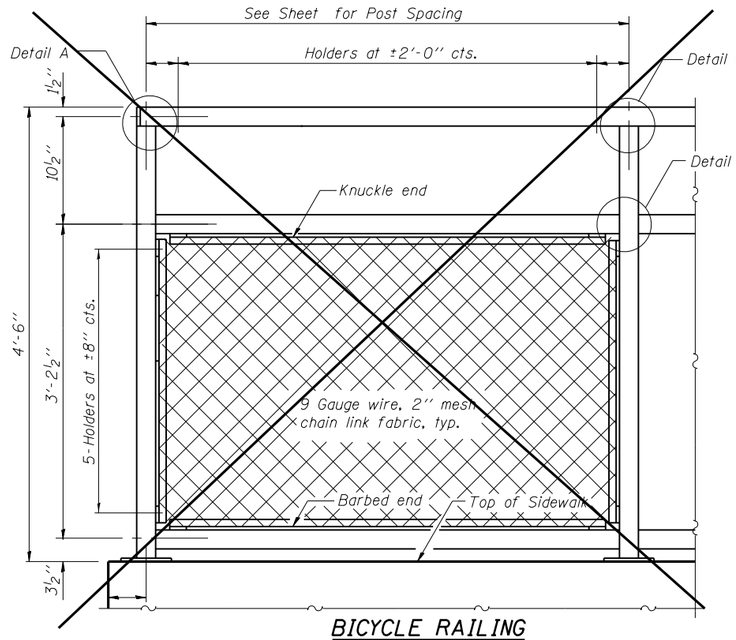

BICYCLE RAILING

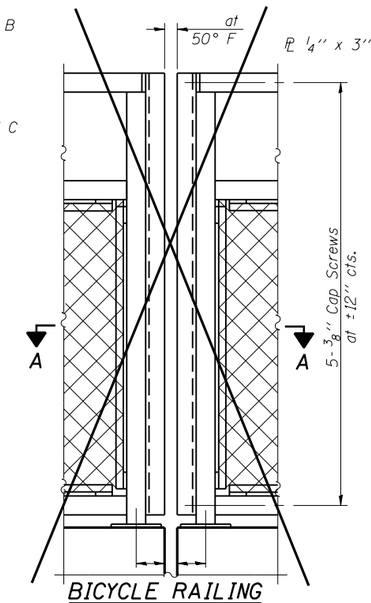

BICYCLE RAILING

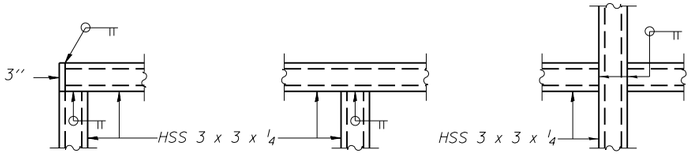

DETAIL A DETAIL B DETAIL C

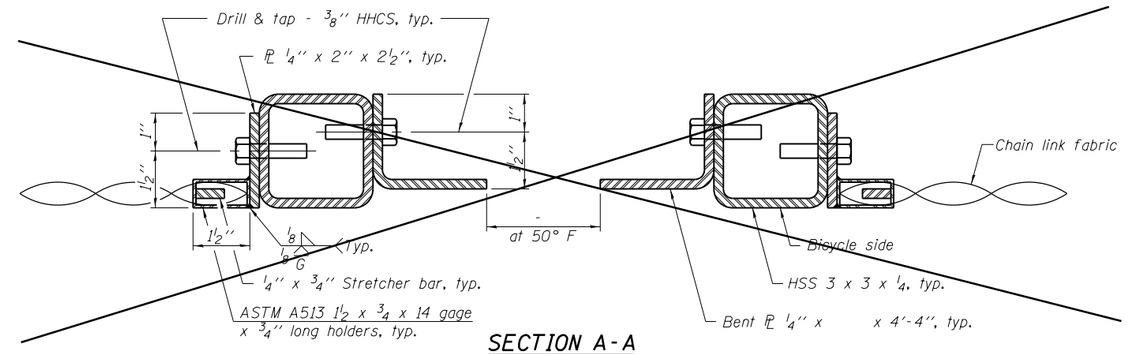

SECTION A-A

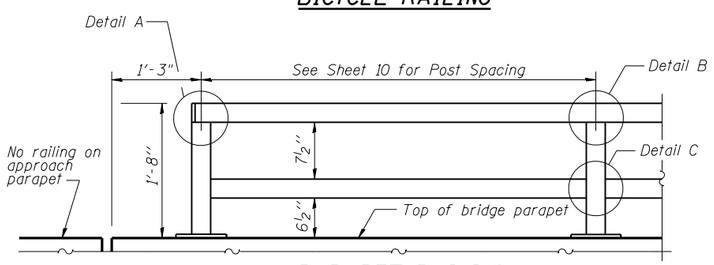

PARAPET RAILING ELEVATION
(Inside Face of Two Element Rail)

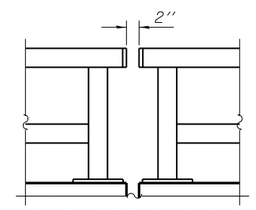

PARAPET RAILING ELEVATION AT EXPANSION JOINT
(Two Element Rail Shown - Three Element Rail Similar)

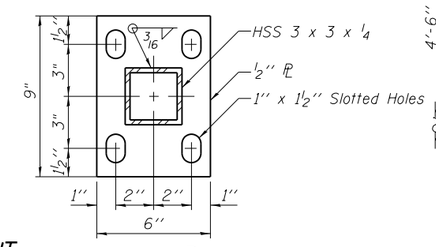

BASE PL

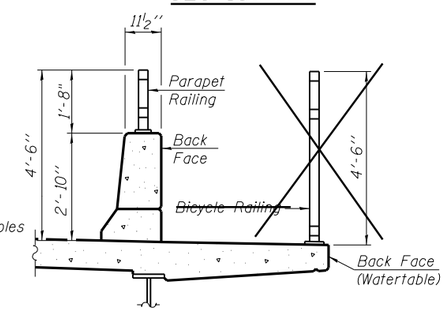

SECTION THRU DECK

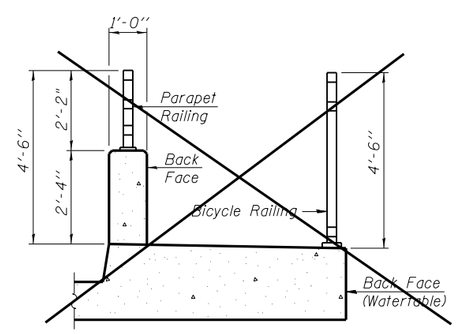

SECTION THRU SIDEWALK

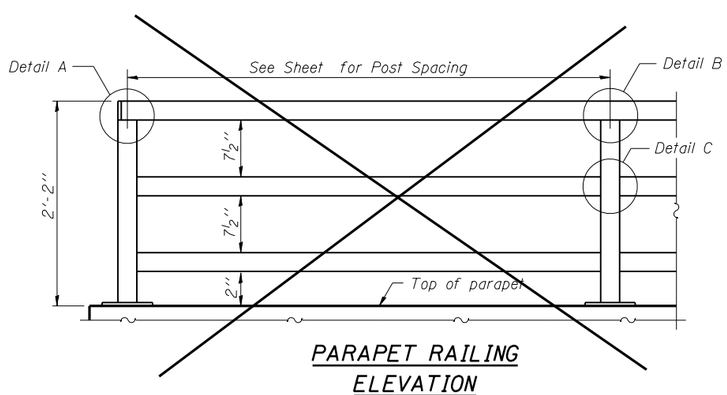

PARAPET RAILING ELEVATION
(Inside Face of Three Element Rail)

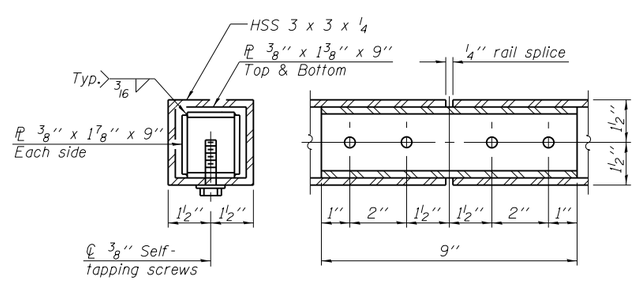

RAIL SPLICE

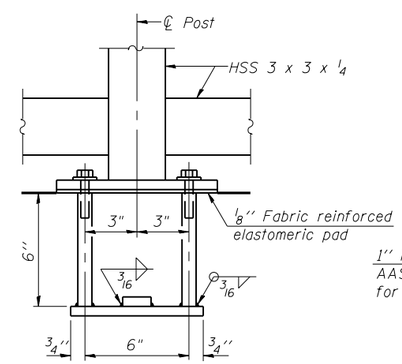

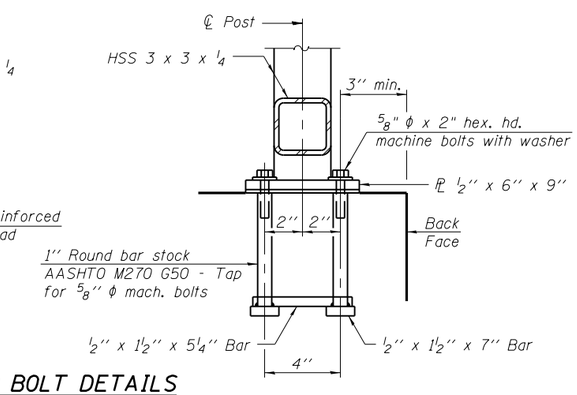

ANCHOR BOLT DETAILS

In lieu of the cast-in-place anchor device shown, the Contractor has the option of drilling and setting ⅝" ϕ anchor rods according to Article 509.06 of the Standard Specifications. Embedment shall be according to the manufacturer's specifications.

All posts, railings, splices and base plates shall be painted per the project specifications

BILL OF MATERIAL

Item	Unit	Quantity
Parapet Railing	Foot	423

R-29 1-27-12 (10'-0" Maximum Post Spacing)

FILE NAME = c:\pw_work\pwidot\lavenderba\d0363618\D000099-978221-016-Bridge_Railing.dgn	USER NAME = $USER$	DESIGNED - DF	REVISED -
		CHECKED - JE	REVISED -
	PLOT SCALE = 0:2.0000 ':' / in.	DRAWN - AK	REVISED -
	PLOT DATE = 1/31/2014	CHECKED - JE	REVISED -

CH2MHILL®

STATE OF ILLINOIS
DEPARTMENT OF TRANSPORTATION

BRIDGE RAILING DETAILS II
STRUCTURE NO. 100-0099

SHEET NO. 16 OF 27 SHEETS

F.A.P. RTE.	SECTION	COUNTY	TOTAL SHEETS	SHEET NO.
331	(1-3)R-2,,N-4,,TS-4,,HBK-1	WILLIAMSON	733	373
DRAWING NO.	BR-16	CONTRACT NO. 78221		
		ILLINOIS FED. AID PROJECT		

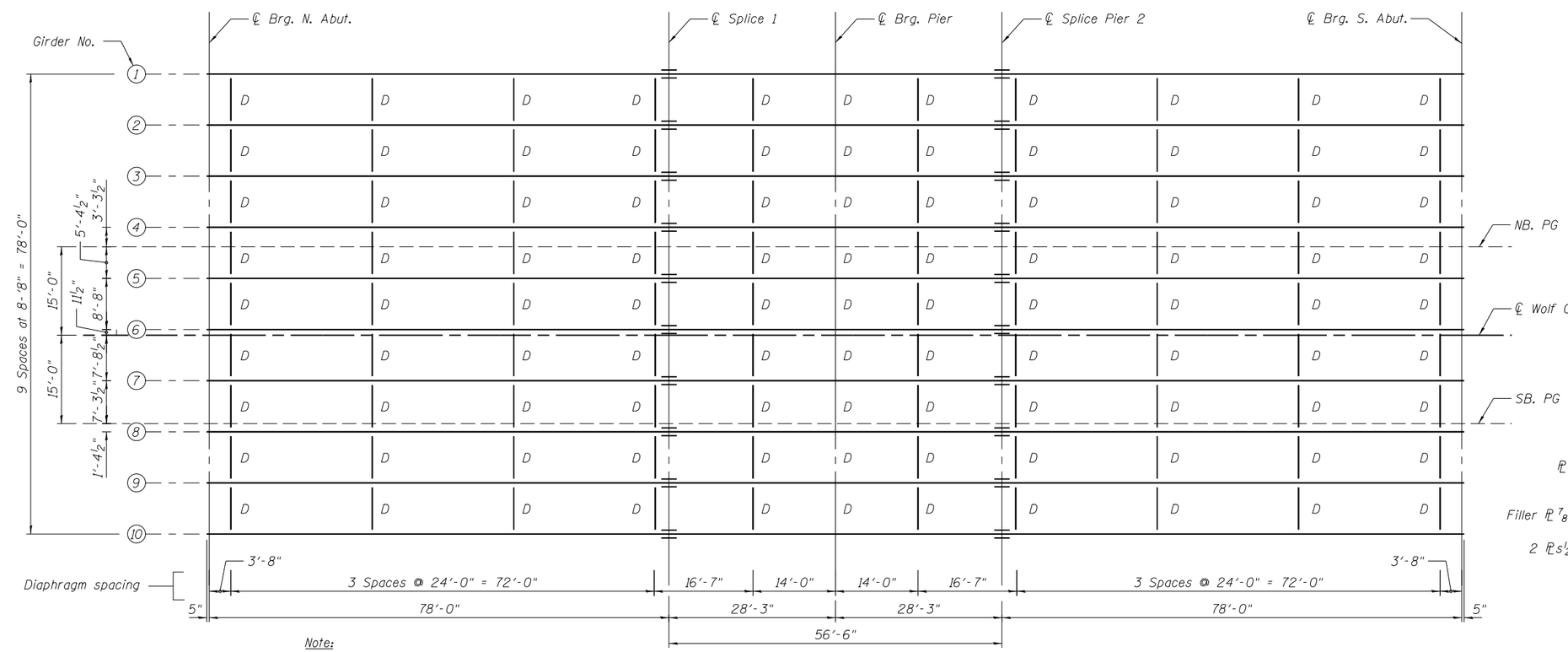

Note:
"D" denotes interior diaphragm

PLAN

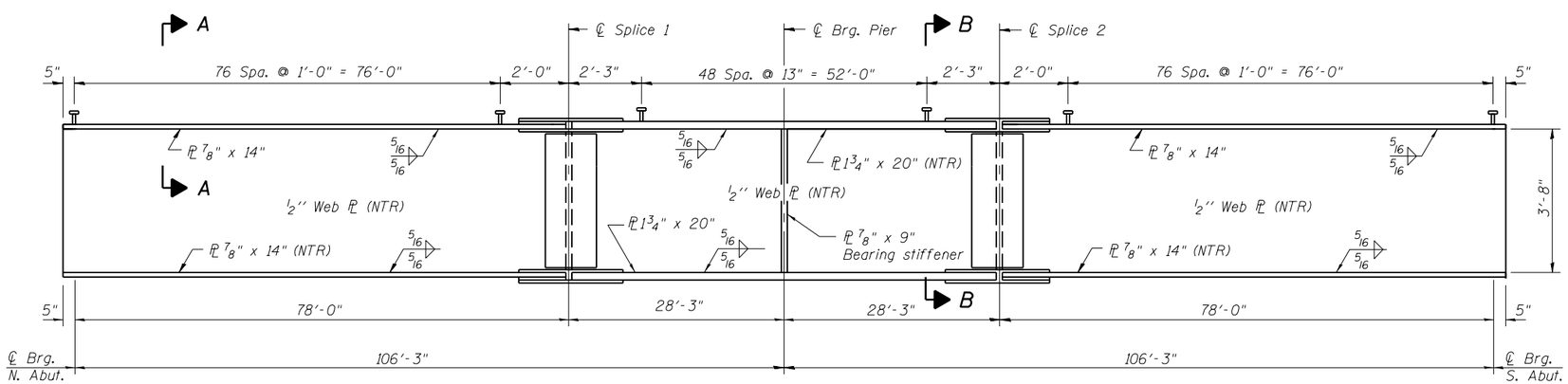

GIRDER ELEVATION

"NTR" denotes plates to which notch toughness requirements are applicable.

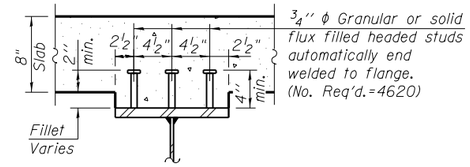

SECTION A-A

(14" Flange)

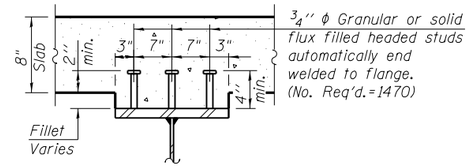

SECTION B-B

(20" Flange)

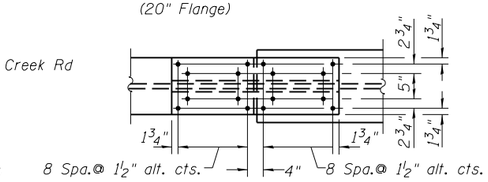

PLAN OF TOP FLANGE

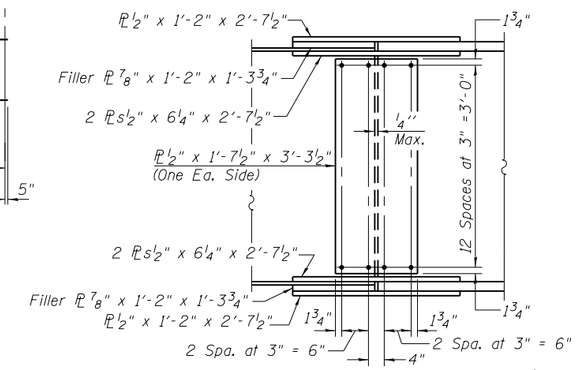

Notes:
15/16" ϕ holes for ⅞" HS bolts

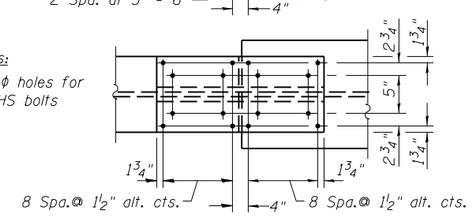

PLAN OF BOTTOM FLANGE

FIELD SPLICE DETAIL

(20 Required)

Notes:

Load carrying components designated "NTR" shall conform to the Impact Testing Requirement, Zone 2.

Structural steel for webs and flanges shall be AASHTO M270 Grade 50 and meet NTR where shown.

All steel for field splices, except fill plates, shall be AASHTO M270 Grade 50 and meet NTR.

FILE NAME = c:\pw_work\pwidot\lavenderba\d0363618\1000099-978221-017-Framing.dgn	USER NAME = $USER$	DESIGNED - DF	REVISED -	STATE OF ILLINOIS DEPARTMENT OF TRANSPORTATION	FRAMING PLAN STRUCTURE NO. 100-0099	F.A.P. RTE.	SECTION	COUNTY	TOTAL SHEETS / SHEET NO.
		CHECKED - JE	REVISED -			331	(1-3)R-2,_N-4,_TS-4,_HBK-1	WILLIAMSON	733 / 374
CH2MHILL®	PLOT SCALE = 0.1667 ' / in.	DRAWN - AK	REVISED -			DRAWING NO. BR-17		CONTRACT NO. 78221	
	PLOT DATE = 1/31/2014	CHECKED - JE	REVISED -		SHEET NO. 17 OF 27 SHEETS		ILLINOIS FED. AID PROJECT		

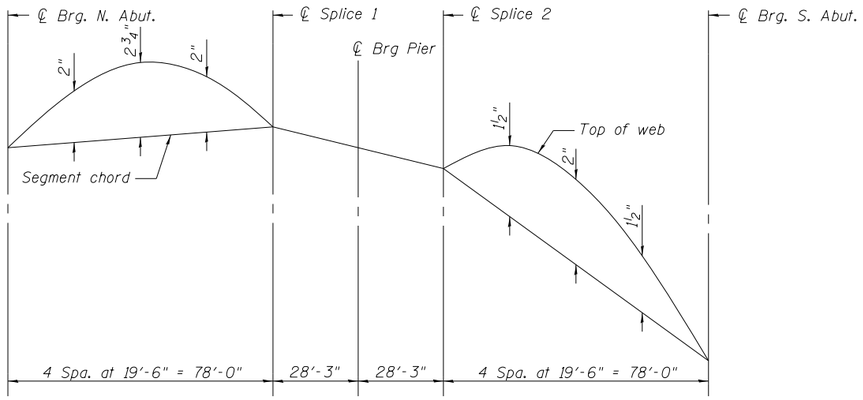

CAMBER DIAGRAM

Notes:
Cambers are based on pour sequence shown on Sht. 8. Should the contractor deviate from the proposed pouring sequence, the contractor must retain the services of an Illinois Licensed Structural Engineer to analyze the structure for revised Pouring Sequence to determine the cambers associated with the revised pouring sequence. Details and calculations with the required signature and seal shall be submitted to the Engineer for review and approval. Cost included in the pay item "Furnishing and Erecting Structural Steel".

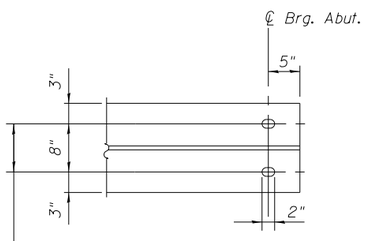

℄ 1" ϕ x 12" anchor bolts with 2 1/4" x 2 1/4" x 5/16" PL washers under nuts. 1 3/8" x 2" slotted holes in flange and 1 1/2" ϕ holes in bearing plate

SECTION C-C

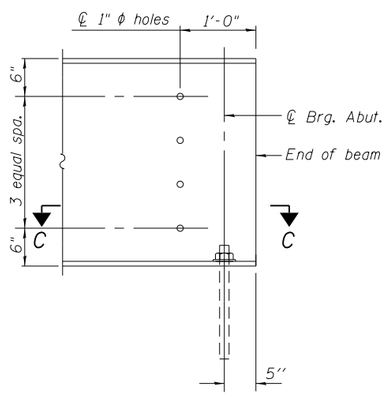

TYP. END OF BEAM ELEVATION

INTERIOR GIRDER MOMENT TABLE			
		0.4 Sp. 1 or 0.6 Sp. 2	Pier
I_s	(in^4)	15885	40196
$I_c(n)$	(in^4)	39990	78140
$I_c(3n)$	(in^4)	30200	59100
$I_c(cr)$	(in^4)		45100
S_s	(in^3)	694	1692
$S_c(n)$	(in^3)	969	8255
$S_c(3n)$	(in^3)	891	3560
$S_c(cr)$	(in^3)		1698
DC1	(k/')	1.005	1.159
M_{DC1}	('k)	672	2025
DC2	(k/')	0.16	0.16
M_{DC2}	('k)	107	339
DW	(k/')	0.43	0.43
M_{DW}	('k)	291	740
M_{LL+IM}	('k)	1467	1937
M_u (Strength I)	('k)	3977	7301
$\phi_f M_n$	('k)	5207	7892
f_s DC1	(ksi)	11.9	14.1
f_s DC2	(ksi)	1.446	1.856
f_s DW	(ksi)	3.92	5.06
f_s (LL+IM)	(ksi)	21.85	17.19
f_s (Service II)	(ksi)	39.1	38.2
$0.95R_hF_{yf}$	(ksi)	47.5	47.5
V_f	(k)	43.0	43.0

INTERIOR GIRDER REACTION TABLE			
		Abut.	Pier
R_{DC1}	(k)	39	161
R_{DC2}	(k)	6	22
R_{DW}	(k)	16	53
R_{LL+IM}	(k)	116	192
R_{Total}	(k)	177	428

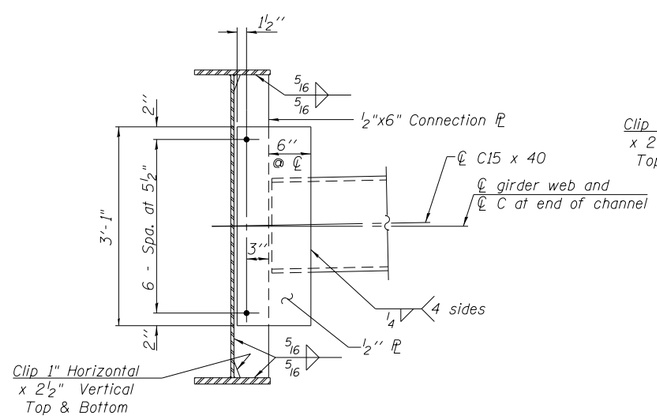

INTERIOR DIAPHRAGM

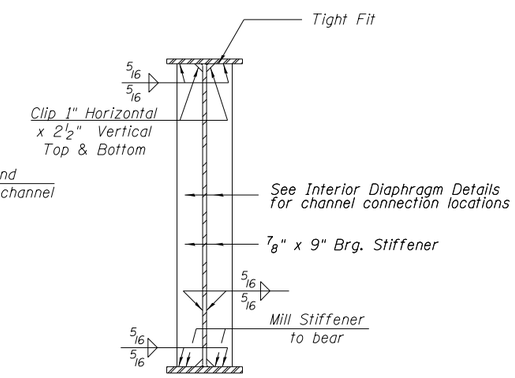

BEARING AT PIER

Notes:
Two hardened washers required for each set of oversized holes.
3/4" ϕ HS bolts. 15/16" ϕ holes.
Terminate welds 1/4" from ends of members and edges of plates.
All steel, except diaphragms and connection plates, shall be AASHTO M270 Grade 50.
Structural steel for bearing stiffeners shall be AASHTO M270 Grade 50.
Alternate channels C15x50 are permitted to facilitate material acquisition. Calculated weight of structural steel is based on C15x40 sections. The alternate, if utilized, shall be provided at no extra cost to the department.
All diaphragms shall be installed as steel is erected and secured with erection pins and bolts except as otherwise noted. Individual diaphragms at supports may be temporarily disconnected to install bearing anchor rods.

I_s, S_s: Non-composite moment of inertia and section modulus of the steel section used for computing f_s (Total-Strength I, and Service II) due to non-composite dead loads ($in.^4$ and $in.^3$).
$I_c(n)$, $S_c(n)$: Composite moment of inertia and section modulus of the steel and deck based upon the modular ratio, "n", used for computing f_s (Total-Strength I, and Service II) due to short-term composite live loads ($in.^4$ and $in.^3$).
$I_c(3n)$, $S_c(3n)$: Composite moment of inertia and section modulus of the steel and deck based upon 3 times the modular ratio, "3n", used for computing f_s (Total-Strength I, and Service II) due to long-term composite (superimposed) dead loads ($in.^4$ and $in.^3$).
DC1: Un-factored non-composite dead load (kips/ft.).
M_{DC1}: Un-factored moment due to non-composite dead load (kip-ft.).
DC2: Un-factored long-term composite (superimposed excluding future wearing surface) dead load (kips/ft.).
M_{DC2}: Un-factored moment due to long-term composite (superimposed excluding future wearing surface) dead load (kip-ft.).
DW: Un-factored long-term composite (superimposed future wearing surface only) dead load (kips/ft.).
M_{DW}: Un-factored moment due to long-term composite (superimposed future wearing surface only) dead load (kip-ft.).
M_{LL+IM}: Un-factored live load moment plus dynamic load allowance (impact) (kip-ft.).
M_u (Strength I): Factored design moment (kip-ft.).
$1.25\ (M_{DC1} + M_{DC2}) + 1.5\ M_{DW} + 1.75\ M_{LL+IM}$
$\phi_f M_n$: Compact composite positive moment capacity computed according to Article 6.10.7.1 or non-slender negative moment capacity according to Article A6.1.1 (kip-ft).
f_s DC1: Un-factored stress at edge of flange for controlling steel flange due to vertical non-composite dead loads as calculated below (ksi).
M_{DC1} / S_{nc}
f_s DC2: Un-factored stress at edge of flange for controlling steel flange due to vertical composite dead loads as calculated below (ksi).
$M_{DC2} / S_c(3n)$ or $M_{DC2} / S_c(cr)$ as applicable.
f_s DW: Un-factored stress at edge of flange for controlling steel flange due to vertical composite future wearing surface loads as calculated below (ksi).
$M_{DW} / S_c(3n)$ or $M_{DW} / S_c(cr)$ as applicable.
f_s (LL+IM): Un-factored stress at edge of flange for controlling steel flange due to vertical composite live plus impact loads as calculated below (ksi).
$M_{LL+IM} / S_c(n)$ or $M_{LL+IM} / S_c(cr)$ as applicable.
f_s (Service II): Sum of stresses as computed below (ksi).
$f_{sDC1} + f_{sDC2} + f_{sDW} + 1.3\ f_{sLL+IM}$
$0.95R_hF_yf$: Composite stress capacity for Service II loading according to Article 6.10.4.2 (ksi).
V_f: Maximum factored shear range in composite portion of span computed according to Article 6.10.10.

TOP OF WEB ELEVATION					
	℄ Brg. N. Abut.	℄ Splice No. 1	℄ Bearing Pier	℄ Splice No. 2	℄ Brg. S. Abut.
Girder 1	476.03	476.28	476.12	476.03	475.29
Girder 2	476.21	476.46	476.30	476.21	475.47
Girder 3	476.39	476.64	476.48	476.40	475.65
Girder 4	476.57	476.82	476.66	476.58	475.83
Girder 5	476.75	477.00	476.84	476.76	476.01
Girder 6	476.93	477.18	477.02	476.94	476.19
Girder 7	476.79	477.04	476.88	476.80	476.05
Girder 8	476.61	476.86	476.70	476.62	475.87
Girder 9	476.43	476.68	476.52	476.44	475.69
Girder 10	476.25	476.50	476.34	476.25	475.51

Note: For fabrication only

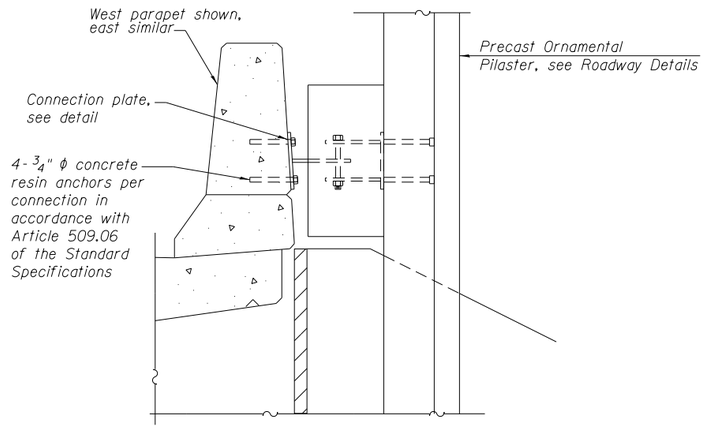

SECTION AT ABUTMENT PILASTER

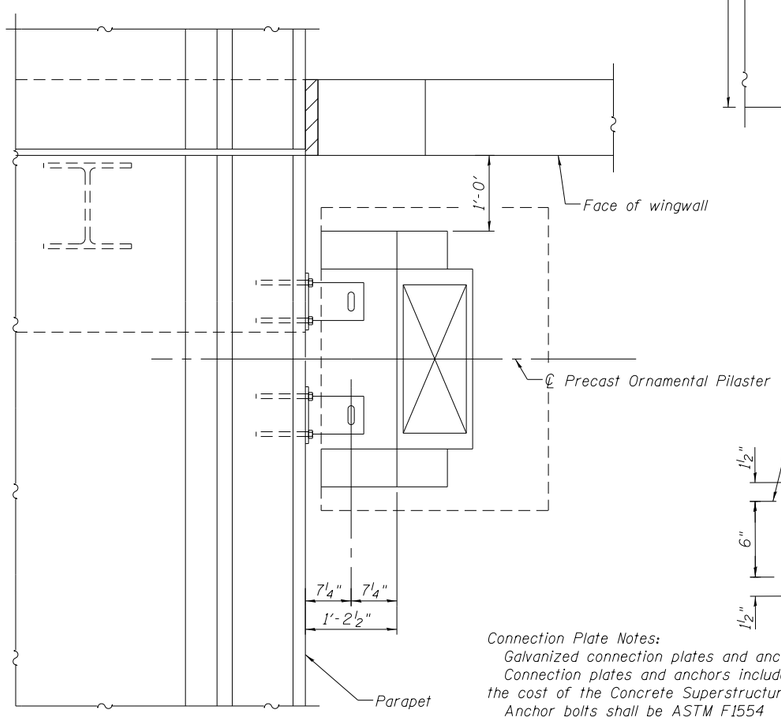

PLAN AT ABUTMENT PILASTER

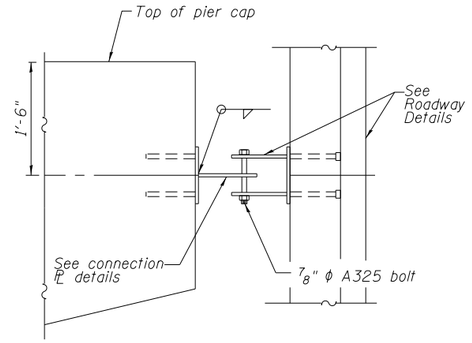

SECTION AT PIER

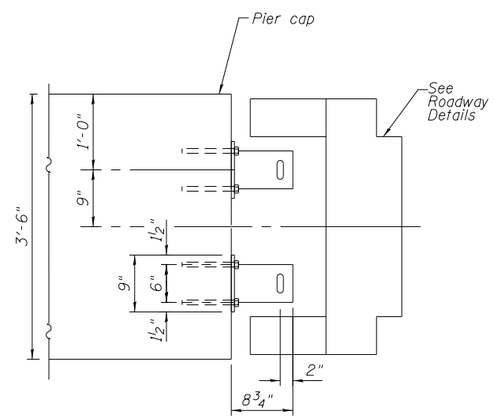

PLAN AT PIER

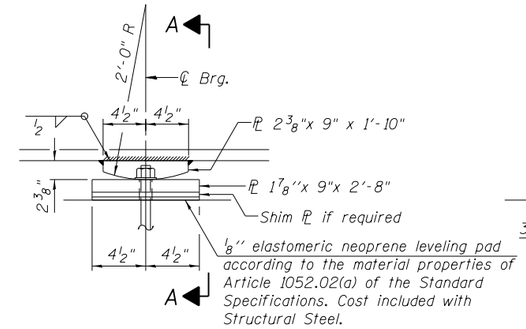

ELEVATION AT PIER

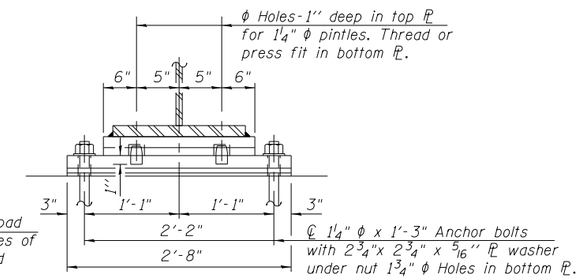

SECTION A-A

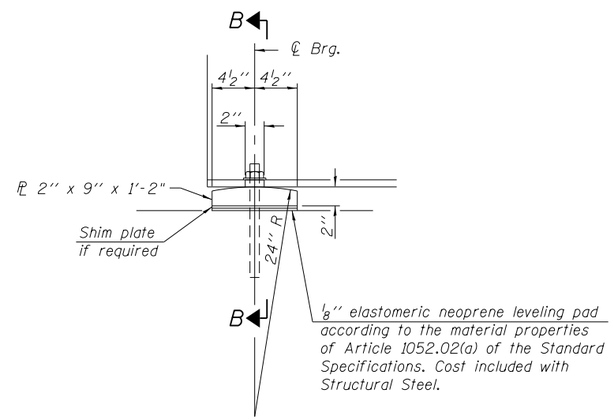

ELEVATION AT ABUTMENT

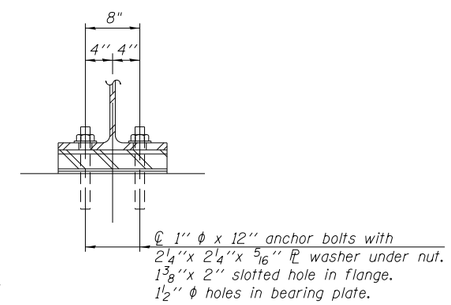

SECTION B-B

FIXED BEARINGS

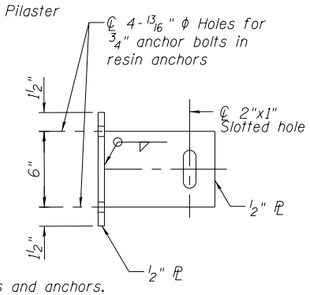

PLAN

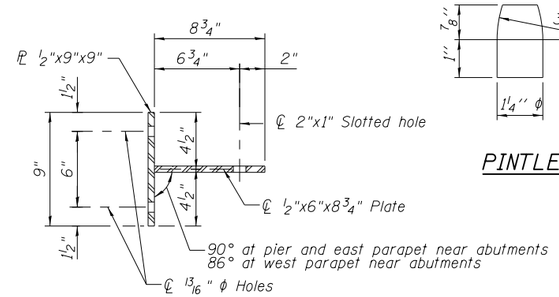

SECTION

CONNECTION PLATE

Connection Plate Notes:
Galvanized connection plates and anchors.
Connection plates and anchors included in the cost of the Concrete Superstructures.
Anchor bolts shall be ASTM F1554 Grade 55 all-thread.

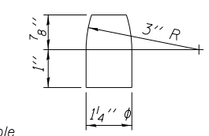

PINTLE

Bearing Notes:
Anchor bolts shall be ASTM F1554 Grade 55 all-thread. The corresponding specified grade of AASHTO M314 anchor bolts may be used in lieu of ASTM F1554.
The anchor bolt sizes and grades shown constitute a calculated seismic structural fuse. Substitution of higher diameter and/or grade anchor bolts will not be allowed.
Anchor bolts at fixed bearings may be either cast in place or installed in holes drilled after the supported member is in place.
Drilled and set anchor bolts shall be installed according to Article 521.06 of the Standard Specifications.
The structural steel plates of the Bearing Assembly shall conform to the requirements of AASHTO M 270 Grade 50.
Two 1/8 in. adjusting shims shall be provided for each bearing in addition to all other plates or shims and placed as shown on bearing details.

BILL OF MATERIAL

Item	Unit	Total
Anchor Bolts, 1 1/4"	Each	20
Anchor Bolts, 1"	Each	40

FILE NAME = 1000099-978221-018-Bearing.dgn	USER NAME = mfox	DESIGNED - DF	REVISED -
		CHECKED - JE	REVISED -
	PLOT SCALE = 0.1667 ' / in.	DRAWN - AK	REVISED -
	PLOT DATE = 3/6/2014	CHECKED - JE	REVISED -

CH2MHILL®

STATE OF ILLINOIS
DEPARTMENT OF TRANSPORTATION

BEARING AND MISCELLANEOUS DETAILS
STRUCTURE NO. 100-0099

SHEET NO. 19 OF 27 SHEETS

F.A.P. RTE.	SECTION	COUNTY	TOTAL SHEETS	SHEET NO.
331	(1-3)R-2,-N-4,-TS-4,-HBK-1	WILLIAMSON	733	376
DRAWING NO. BR-19		CONTRACT NO. 78221		
		ILLINOIS FED. AID PROJECT		

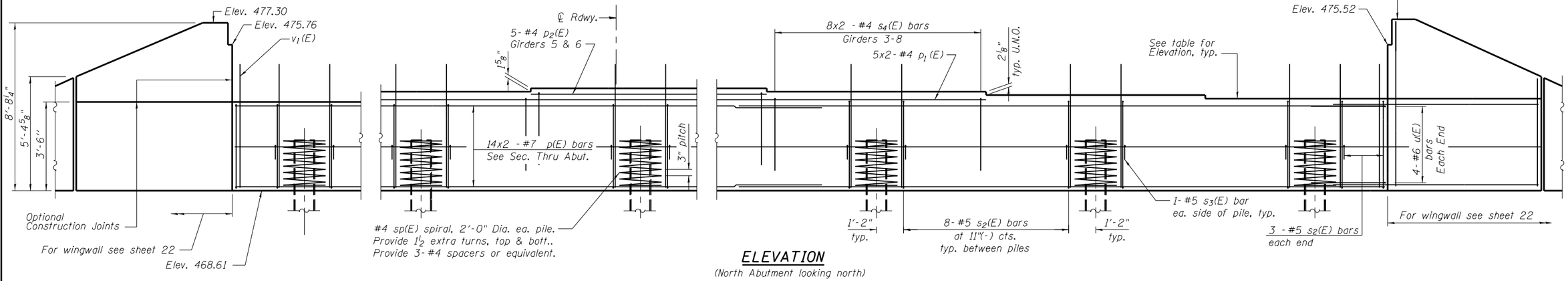

ELEVATION

(North Abutment looking north)

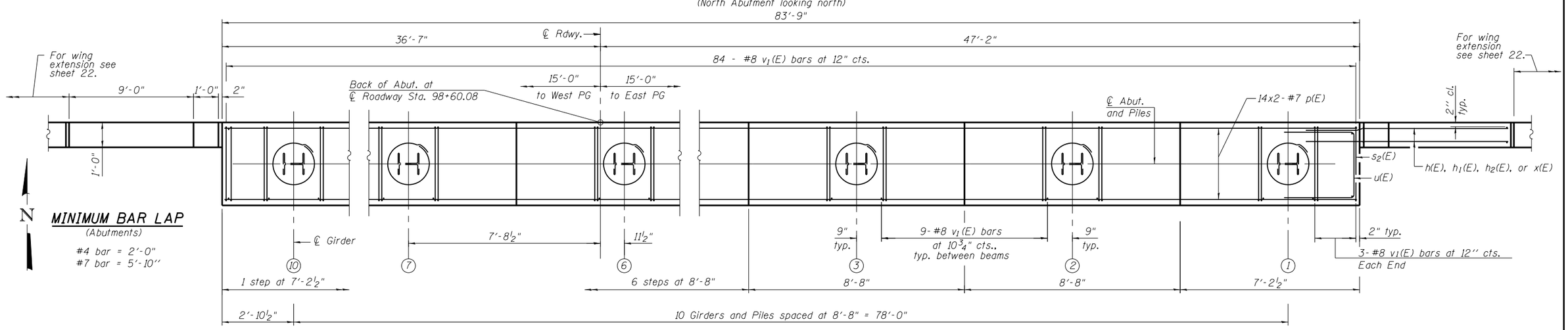

MINIMUM BAR LAP

(Abutments)

#4 bar = 2'-0"
#7 bar = 5'-10"

PLAN

(North Abutment)

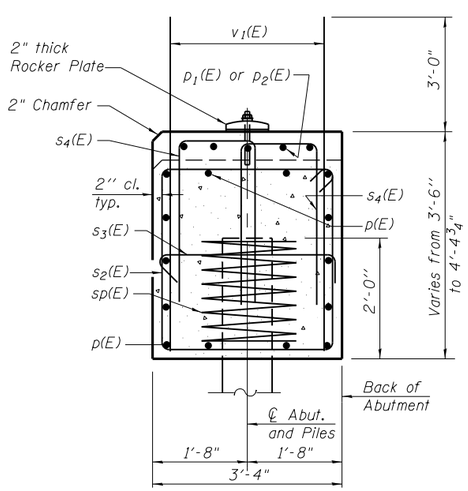

SEC. THRU ABUT.

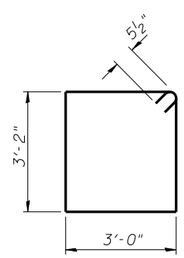

BAR $s_2(E)$

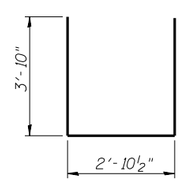

BAR u(E)

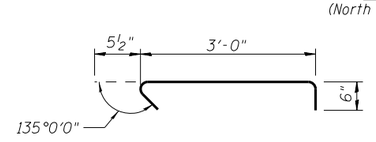

BAR $s_3(E)$

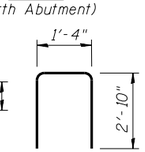

BAR $s_4(E)$

Notes:
Pour steps monolithically with cap.
Excavation, concrete and reinforcement bars are billed with substructure on sheet 22 of 27.
Bars indicated thus 20x3-#5 etc., indicates 20 lines of bars with 3 lenghts per line.

SEAT ELEVATIONS	
GIRDER	ELEVATION
1	472.11
2	472.29
3	472.47
4	472.65
5	472.83
6	473.01
7	472.87
8	472.69
9	472.51
10	472.33

PILE DATA

Type: HP 14 x 89
Nominal Required Bearing: 677 kips
Factored Resistance Available: 372 kips
Est. Length: 56'-0"
No. Production Piles: 9
No. Test Piles: 1 at N. Abutment

Piles shall be driven through 1'-10" diameter precored holes extending to elevation 427.6' according to Article 512.09 (c) of the Standard Specifications. Cost included in driving piles.

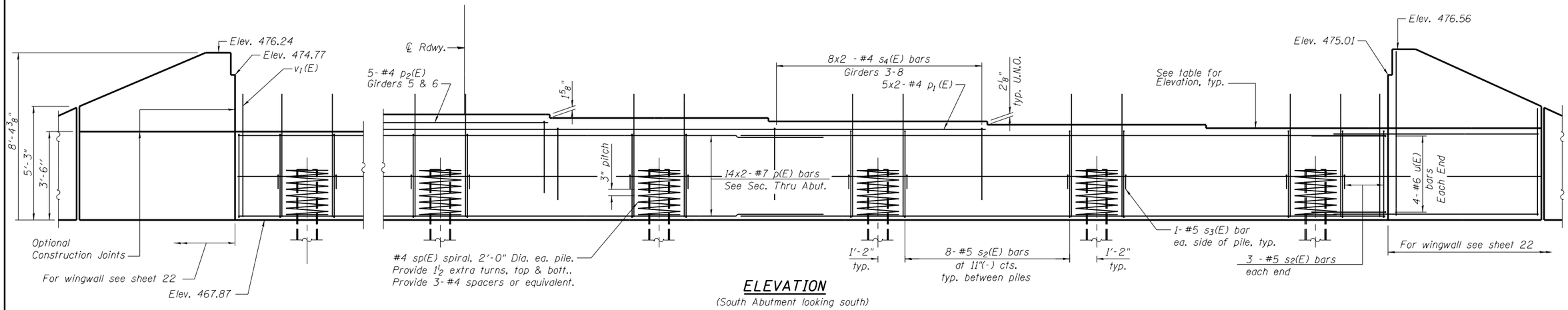

ELEVATION

(South Abutment looking south)

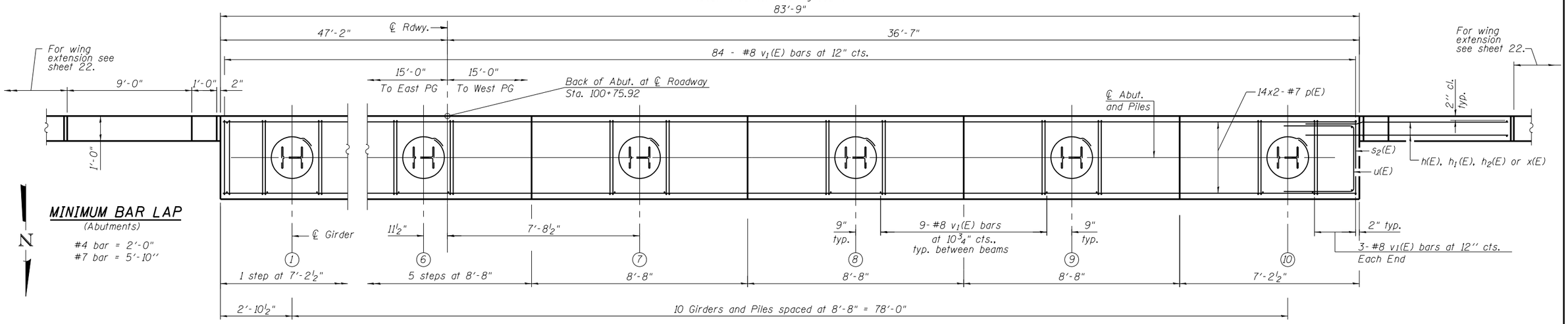

MINIMUM BAR LAP

(Abutments)

#4 bar = 2'-0"
#7 bar = 5'-10"

N

PLAN

(South Abutment)

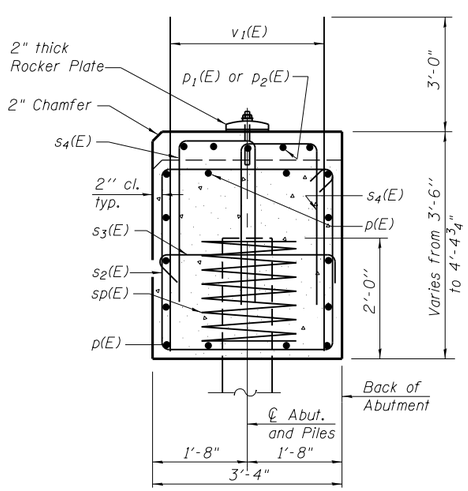

SEC. THRU ABUT.

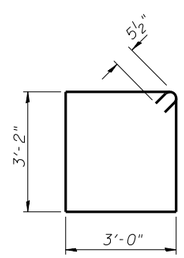

BAR $s_2(E)$

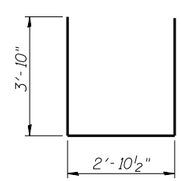

BAR u(E)

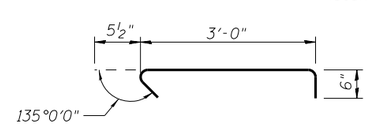

BAR $s_3(E)$

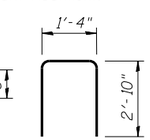

BAR $s_4(E)$

Notes:
Pour steps monolithically with cap.
Excavation, concrete and reinforcement bars are billed with substructure on sheet 22 of 27.
Bars indicated thus 20x3-#5 etc., indicates 20 lines of bars with 3 lenghts per line.

SEAT ELEVATIONS	
GIRDER	ELEVATION
1	471.37
2	471.55
3	471.73
4	471.91
5	472.09
6	472.27
7	472.13
8	471.95
9	471.77
10	471.59

PILE DATA

Type: HP 14 x 89
Nominal Required Bearing: 677 kips
Factored Resistance Available: 372 kips
Est. Length: 56'-0"
No. Production Piles: 10

Piles shall be driven through 1'-10" diameter precored holes extending to elevation 424.8' according to Article 512.09 (c) of the Standard Specifications. Cost included in driving piles.

FILE NAME = c:\pw_work\pwidot\lavenderba\d0363618\D000299-978221-021-SAbutment.dgn	USER NAME = $USER$	DESIGNED - DF	REVISED -
CH2MHILL®	PLOT SCALE = 0.1667 ' / in.	CHECKED - MN	REVISED -
	PLOT DATE = 1/31/2014	DRAWN - AK	REVISED -
		CHECKED - MN	REVISED -

STATE OF ILLINOIS
DEPARTMENT OF TRANSPORTATION

SOUTH ABUTMENT PLAN AND ELEVATION
STRUCTURE NO. 100-0099

SHEET NO. 21 OF 27 SHEETS

F.A.P. RTE.	SECTION	COUNTY	TOTAL SHEETS	SHEET NO.
331	(1-3)R-2,_N-4,_TS-4,_HBK-1	WILLIAMSON	733	378
DRAWING NO. BR-21		CONTRACT NO. 78221		
		ILLINOIS FED. AID PROJECT		

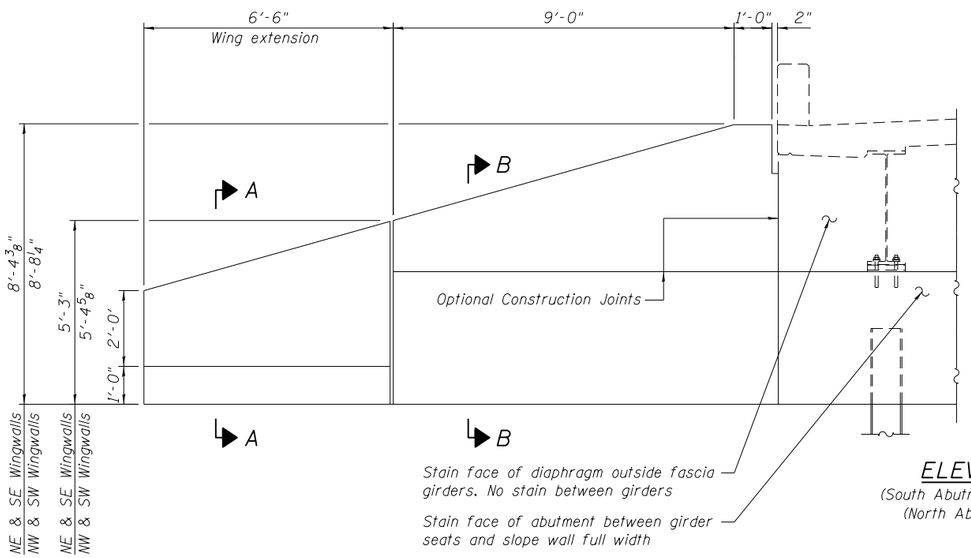

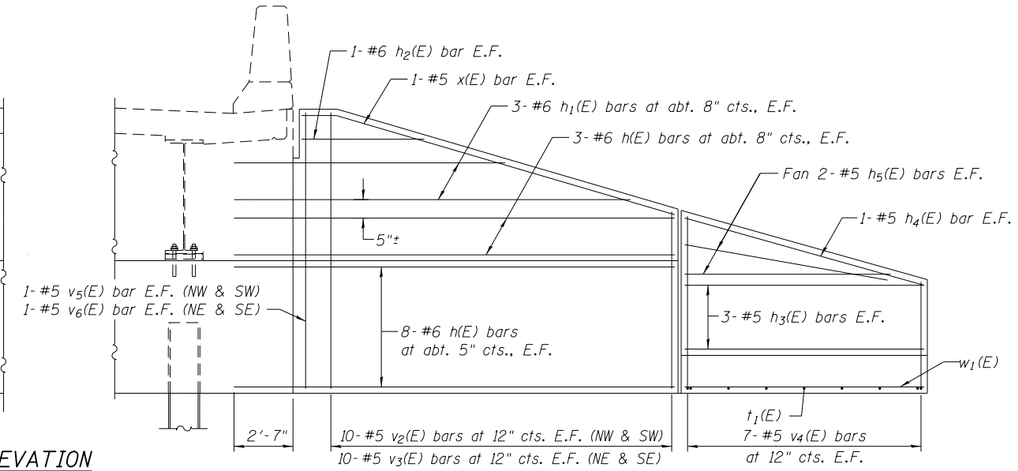

ELEVATION

(South Abutment looking south)
(North Abutment similar)

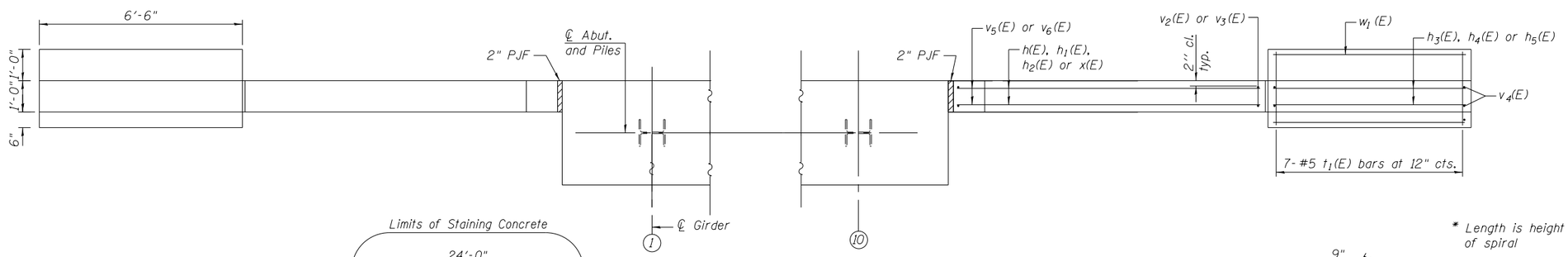

PLAN

(South Abutment)

N

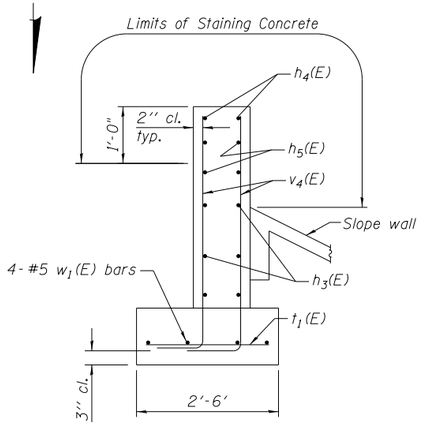

SECTION A-A

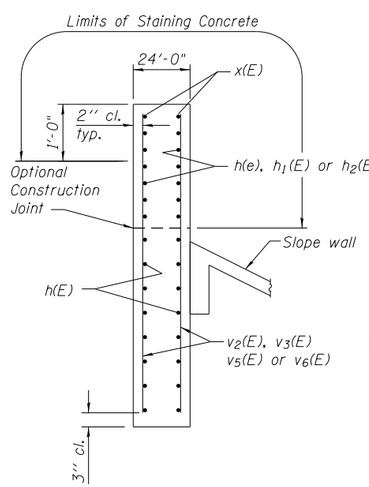

SECTION B-B

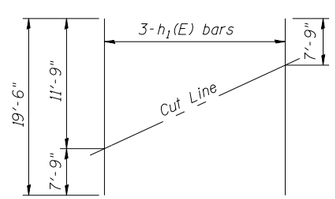

BAR $h_1(E)$

Order $h_1(E)$ bars full length. Cut as shown and use remainder of bars in opposite face.

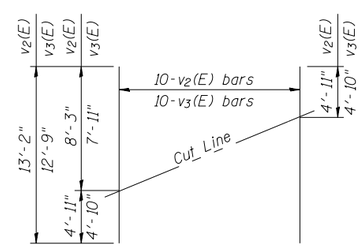

BARS $v_2(E)$ and $v_3(E)$

Order $v_2(E)$ and $v_3(E)$ bars full length. Cut as shown and use remainder of bars in opposite face.

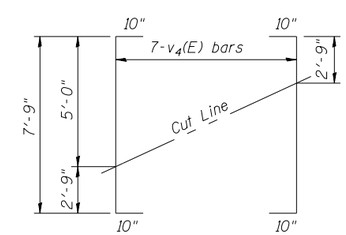

BAR $v_4(E)$

Order $v_4(E)$ bars full length. Cut as shown and use remainder of bars in opposite face.

FIELD CUTTING DIAGRAMS

* Length is height of spiral

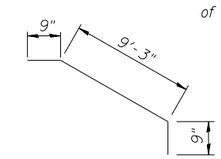

BAR x(E)

BILL OF MATERIAL (N. ABUT.)

Bar	No.	Size	Length	Shape
h(E)	44	#6	12'-7"	
$h_1(E)$	6	#6	19'-6"	
$h_2(E)$	4	#6	2'-4"	
$h_3(E)$	12	#5	6'-2"	
$h_4(E)$	4	#5	6'-6"	
$h_5(E)$	4	#5	6'-0"	
p(E)	28	#7	44'-8"	
$p_1(E)$	10	#4	27'-0"	
$p_2(E)$	5	#4	17'-0"	
$s_2(E)$	78	#5	13'-3"	
$s_3(E)$	20	#5	4'-0"	
$s_4(E)$	96	#4	7'-0"	
* sp(E)	10	#4	2'-0"	
$t_1(E)$	14	#5	2'-2"	
u(E)	8	#6	10'-7"	
$v_1(E)$	171	#8	6'-4"	
$v_2(E)$	20	#5	13'-2"	
$v_3(E)$	20	#5	12'-9"	
$v_4(E)$	14	#5	9'-5"	
$v_5(E)$	2	#5	8'-3"	
$v_6(E)$	2	#5	7'-11"	
$w_1(E)$	8	#5	6'-2"	
x(E)	4	#5	10'-9"	
Granular Backfill for Structures			Cu. Yd.	167.5
Structure Excavation			Cu. Yd.	167.5
Concrete Structures			Cu. Yd.	49.2
Reinforcement Bars, Epoxy Coated			Pound	9870
Furnishing Steel Piles HP 14x89			Foot	504
Driving Piles			Foot	504
Test Pile Steel HP 14x89			Each	1
Geocomposite Wall Drain			Sq. Yd.	93.5
Protective Coat			Sq. Yd.	16.6
Pipe Underdrains for Structures 4"			Foot	117

BILL OF MATERIAL (S. ABUT.)

Bar	No.	Size	Length	Shape
h(E)	44	#6	12'-7"	
$h_1(E)$	6	#6	19'-6"	
$h_2(E)$	4	#6	2'-4"	
$h_3(E)$	12	#5	6'-2"	
$h_4(E)$	4	#5	6'-6"	
$h_5(E)$	4	#5	6'-0"	
p(E)	28	#7	44'-8"	
$p_1(E)$	10	#4	27'-0"	
$p_2(E)$	5	#4	17'-0"	
$s_2(E)$	78	#5	13'-3"	
$s_3(E)$	20	#5	4'-0"	
$s_4(E)$	96	#4	7'-0"	
* sp(E)	10	#4	2'-0"	
$t_1(E)$	14	#5	2'-2"	
u(E)	8	#6	10'-7"	
$v_1(E)$	171	#8	6'-4"	
$v_2(E)$	20	#5	13'-2"	
$v_3(E)$	20	#5	12'-9"	
$v_4(E)$	14	#5	9'-5"	
$v_5(E)$	2	#5	8'-3"	
$v_6(E)$	2	#5	7'-11"	
$w_1(E)$	8	#5	6'-2"	
x(E)	4	#5	10'-9"	
Granular Backfill for Structures			Cu. Yd.	167.5
Structure Excavation			Cu. Yd.	167.5
Concrete Structures			Cu. Yd.	49.2
Reinforcement Bars, Epoxy Coated			Pound	9870
Furnishing Steel Piles HP 14x89			Foot	560
Driving Piles			Foot	560
Geocomposite Wall Drain			Sq. Yd.	93.5
Protective Coat			Sq. Yd.	16.6
Pipe Underdrains for Structures 4"			Foot	117

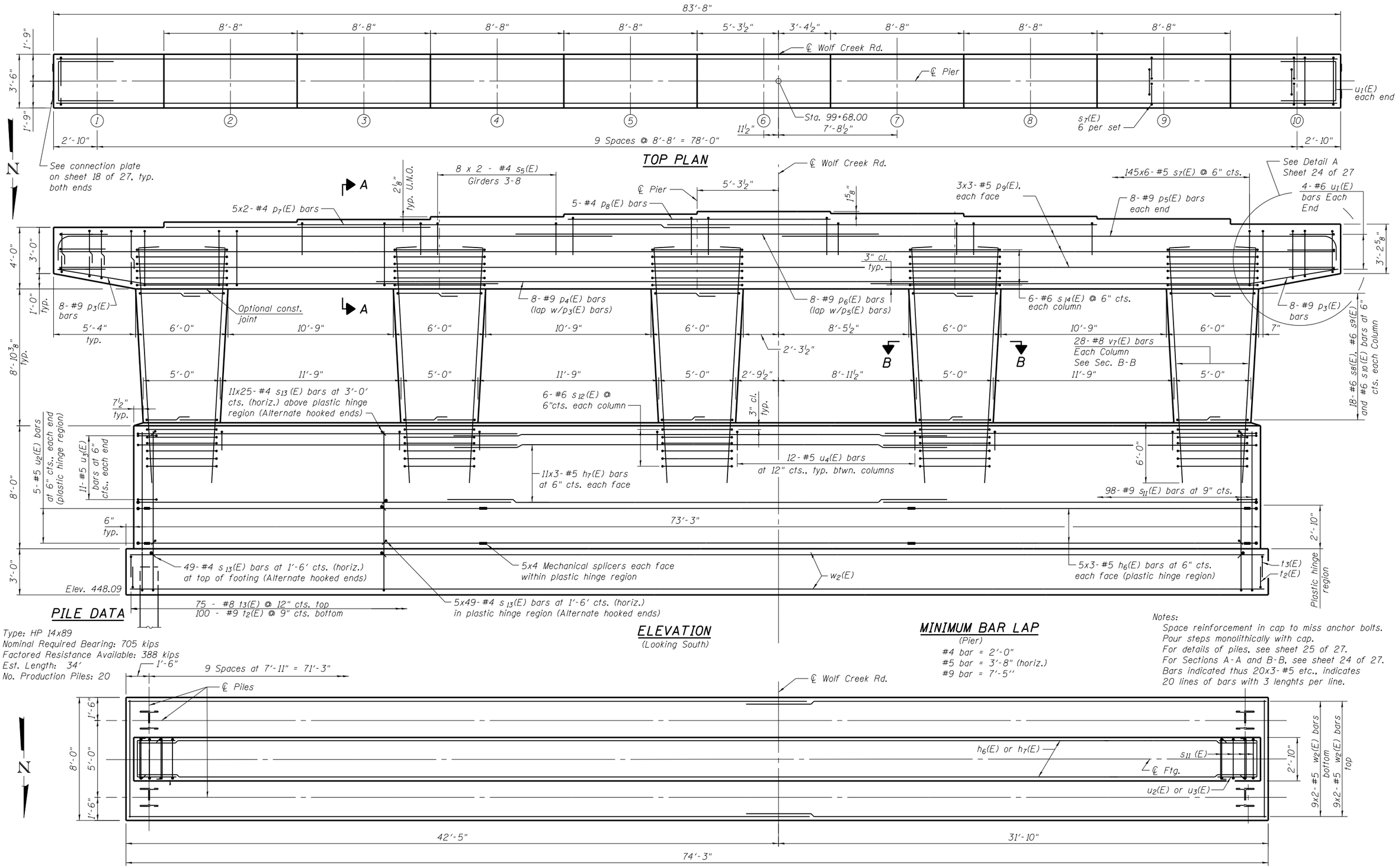

FILE NAME = c:\pw_work\pwidot\lavenderba\d0363618\I0000099-978221-023-Pier.dgn	USER NAME = $USER$	DESIGNED - DF	REVISED -
CH2MHILL®	PLOT SCALE = 0.1667 ' / in.	CHECKED - MN	REVISED -
	PLOT DATE = 1/31/2014	DRAWN - AK	REVISED -
		CHECKED - MN	REVISED -

STATE OF ILLINOIS
DEPARTMENT OF TRANSPORTATION

PIER PLAN AND ELEVATION
STRUCTURE NO. 100-0099

SHEET NO. 23 OF 27 SHEETS

F.A.P. RTE.	SECTION	COUNTY	TOTAL SHEETS	SHEET NO.
331	(1-3)R-2,_N-4,_TS-4,_HBK-1	WILLIAMSON	733	380
DRAWING NO.	BR-23	CONTRACT NO. 78221		
		ILLINOIS FED. AID PROJECT		

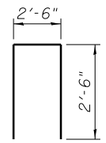

BAR s_5(E)

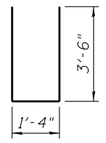

BAR s_7(E)

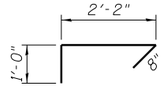

BAR s_8(E)

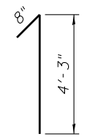

BAR s_9(E)

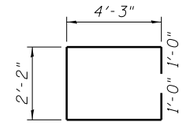

BAR s_{10} (E)

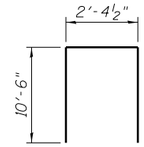

BAR s_{11}(E)

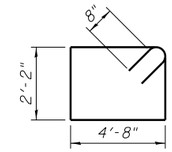

BAR s_{12} (E)

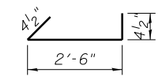

BAR s_{13} (E)

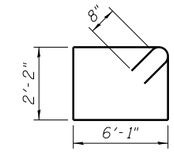

BAR s_{14} (E)

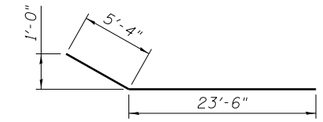

BAR p_3(E)

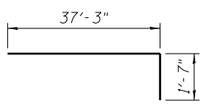

BAR p_5(E)

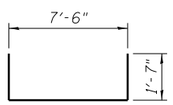

BAR t_2(E)

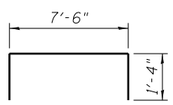

BAR t_3(E)

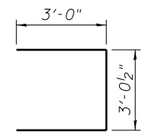

BAR u_1(E)

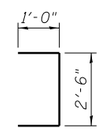

BAR u_2(E)

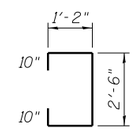

BAR u_3(E)

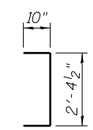

BAR u_4(E)

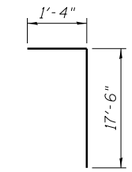

BAR v_7(E)

SEAT ELEVATIONS	
GIRDER	ELEVATION
1	471.95
2	472.13
3	472.31
4	472.49
5	472.67
6	472.85
7	472.71
8	472.53
9	472.35
10	472.17

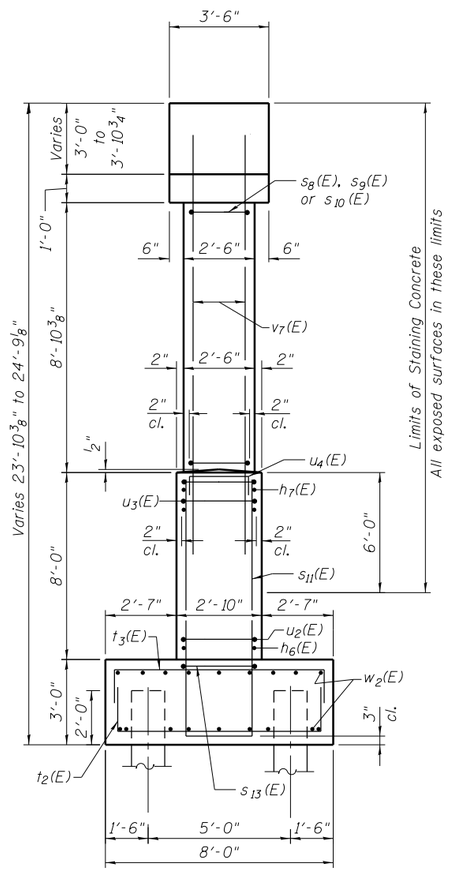

END VIEW

MINIMUM BAR LAP

(Pier)

#4 bar = 2'-0"
#5 bar = 3'-8" (horiz.)
#9 bar = 7'-5"

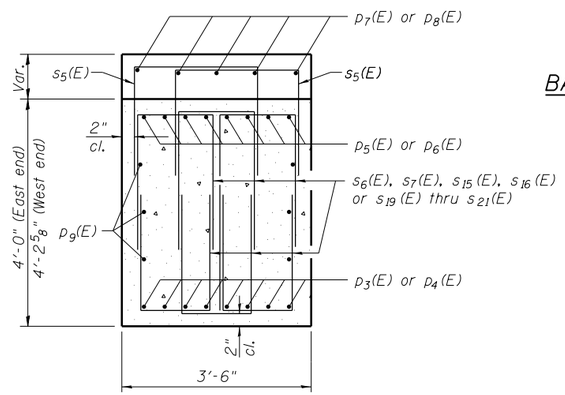

SECTION A-A

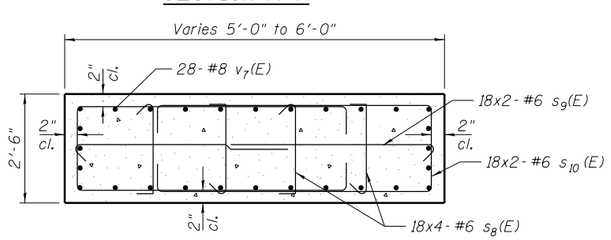

SECTION B-B

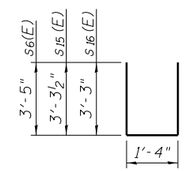

BARS s_6(E), s_{15}(E) and s_{16}(E)

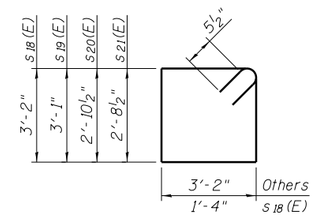

BARS s_{18}(E) thru s_{21}(E)

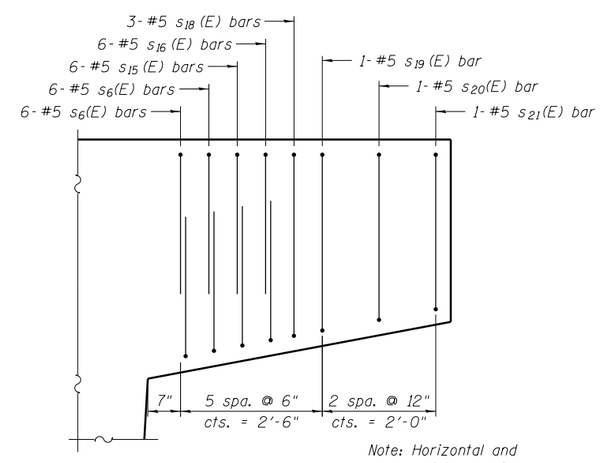

Note: Horizontal and end bars not shown for clarity

DETAIL A

(West end as shown, east end opp hand)

BILL OF MATERIAL

Bar	No.	Size	Length	Shape
h_6(E)	30	#5	23'-8"	
h_7(E)	66	#5	26'-10"	
p_3(E)	16	#9	28'-10"	
p_4(E)	8	#9	41'-8"	
p_5(E)	16	#9	38'-10"	
p_6(E)	8	#9	24'-3"	
p_7(E)	10	#4	27'-0"	
p_8(E)	5	#4	17'-0"	
p_9(E)	18	#5	30'-2"	
s_5(E)	96	#4	7'-6"	
s_6(E)	24	#5	8'-2"	
s_7(E)	870	#5	8'-4"	
s_8(E)	360	#6	3'-10"	
s_9(E)	180	#6	4'-11"	
s_{10} (E)	180	#6	12'-8"	
s_{11}(E)	98	#9	23'-5"	
s_{12} (E)	30	#6	15'-0"	
s_{13} (E)	569	#4	3'-3"	
s_{14} (E)	30	#6	17'-10"	
s_{15} (E)	12	#5	7'-11"	
s_{16} (E)	12	#5	7'-10"	
s_{18} (E)	6	#5	9'-11"	
s_{19} (E)	2	#5	13'-5"	
s_{20}(E)	2	#5	13'-0"	
s_{21}(E)	2	#5	12'-8"	
t_2(E)	100	#9	10'-8"	
t_3(E)	75	#8	10'-2"	
u_1(E)	8	#6	9'-1"	
u_2(E)	10	#5	4'-6"	
u_3(E)	22	#5	6'-6"	
u_4(E)	48	#5	4'-1"	
v_7(E)	140	#8	18'-10"	
w_2(E)	36	#5	38'-0"	
Braced Excavation			Cu. Yd.	188
Concrete Structures			Cu. Yd.	199.9
Reinforcement Bars, Epoxy Coated			Pound	49,440
Staining Concrete Structures			Sq. Ft.	2761
Furnishing Steel Piles HP14x89			Foot	680
Driving Piles			Foot	680
Mechanical Splicers			Each	40

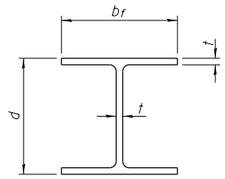

STEEL PILE TABLE

Designation	Depth d	Flange width b_f	Web and Flange thickness t	Encasement diameter A
HP 14x117	14 1/4''	14 7/8''	13/16''	30''
x102	14''	14 3/4''	11/16''	30''
x89	13 7/8''	14 3/4''	5/8''	30''
x73	13 5/8''	14 5/8''	1/2''	30''
HP 12x84	12 1/4''	12 1/4''	11/16''	24''
x74	12 1/8''	12 1/4''	5/8''	24''
x63	12''	12 1/8''	1/2''	24''
x53	11 3/4''	12''	7/16''	24''
HP 10x57	10''	10 1/4''	9/16''	24''
x42	9 3/4''	10 1/8''	7/16''	24''
HP 8x36	8''	8 1/8''	7/16''	18''

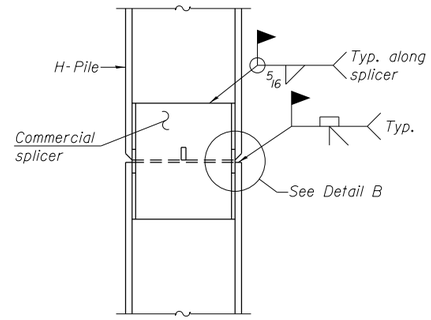

ELEVATION

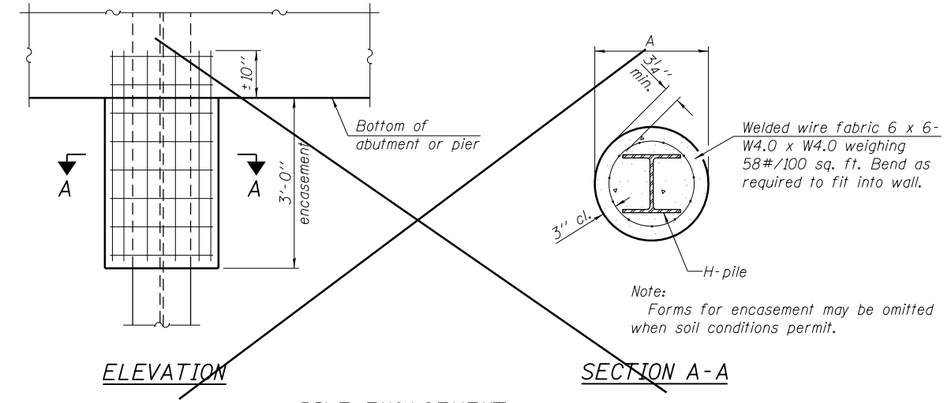

ELEVATION

SECTION A-A

PILE ENCASEMENT

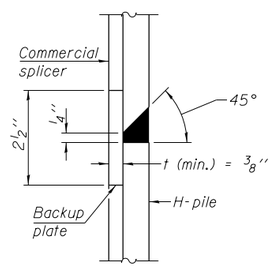

DETAIL "B"

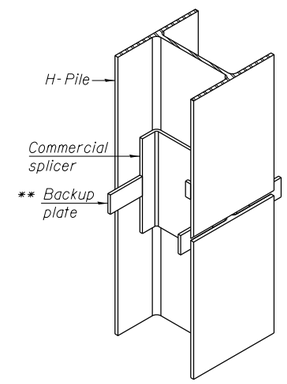

ISOMETRIC VIEW

WELDED COMMERCIAL SPLICE

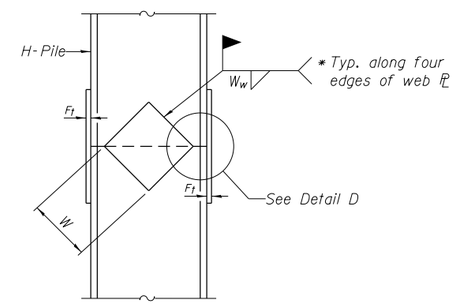

ELEVATION

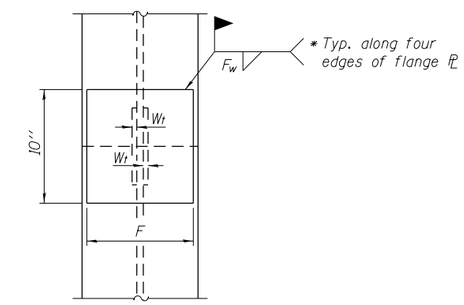

END VIEW

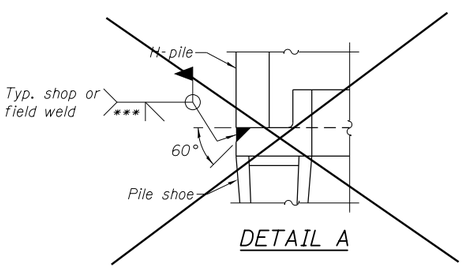

ELEVATION

DETAIL A

H-PILE SHOE ATTACHMENT

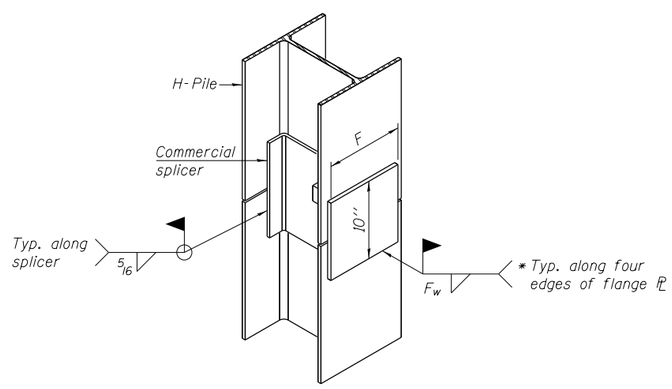

ISOMETRIC VIEW

WELDED COMMERCIAL SPLICE ALTERNATE

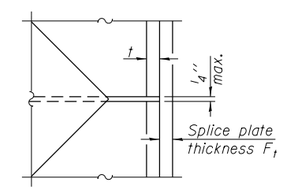

DETAIL D

Designation	F	F_t	F_w	W	W_t	W_w
HP 14x117	12 1/2''	1''	7/8''	7 3/4''	5/8''	1/2''
x102	12 1/2''	7/8''	3/4''	7 3/4''	5/8''	1/2''
x89	12 1/2''	3/4''	11/16''	7 3/4''	5/8''	1/2''
x73	12 1/2''	5/8''	9/16''	7 3/4''	5/8''	1/2''
HP 12x84	10''	7/8''	11/16''	6 1/2''	5/8''	1/2''
x74	10''	7/8''	11/16''	6 1/2''	5/8''	1/2''
x63	10''	5/8''	1/2''	6 1/2''	1/2''	3/8''
x53	10''	5/8''	1/2''	6 1/2''	1/2''	3/8''
HP 10x57	8''	3/4''	9/16''	5 1/4''	1/2''	3/8''
x42	8''	5/8''	9/16''	5 1/4''	1/2''	3/8''
HP 8x36	7''	5/8''	7/16''	4 1/4''	1/2''	3/8''

WELDED PLATE FIELD SPLICE

* Interrupt welds 1/4'' from end of web and/or each flange.

** Remove portions of backup plates that extend outside the flanges.

*** Weld size per pile shoe manufacturer (5/16'' min.).

Note:
The steel H-piles shall be according to AASHTO M270 Grade 50.

F-HP 7-1-10

FILE NAME = 1000099-978221-025-Pile_details.dgn	USER NAME = mfox	DESIGNED - DF	REVISED -
CH2MHILL®		CHECKED - JE	REVISED -
	PLOT SCALE = 0:2.0000 ':' / in.	DRAWN - AK	REVISED -
	PLOT DATE = 3/6/2014	CHECKED - JE	REVISED -

STATE OF ILLINOIS
DEPARTMENT OF TRANSPORTATION

HP PILE DETAILS
STRUCTURE NO. 100-0099
SHEET NO. 25 OF 27 SHEETS

F.A.P. RTE.	SECTION	COUNTY	TOTAL SHEETS	SHEET NO.
331	(1-3)R-2,_N-4,_TS-4,_HBK-1	WILLIAMSON	733	382
DRAWING NO. BR-25		CONTRACT NO. 78221		
		ILLINOIS FED. AID PROJECT		

ILLINOIS DEPARTMENT OF TRANSPORTATION
District Nine Materials

Bridge Foundation
Boring Log
Sheet 1 of 1

Wolf Creek Road Over FAP 331 (IL 13)

Route: FAP 331 (IL 13) Structure Number: Date: 11/15/2010

Section (1-4,1-3)R-2... Bored By: R Moberly

County: Williamson Location: Intersection of IL 13 and Wolf Creek Checked By: R Graeff

Boring No 2-8
Station 520482
Offset 60' Lt. CL WBL
Ground Surface 455.1 Ft

Surf Wat Elev:
Ground Water Elevation
when Drilling 427.5
At Completion
At: Hrs:

DEPTH	BLOWS	Qu tsf	W%
Asphalt and Crushed Aggregate			
453.6			
Very stiff, moist, grey and brown, Silty Clay Loam A-6	3		
	5	3.1B	13
	6		
450.6			
Very stiff, moist, brown, Clay A7-6 5.0	1		
	2	2.3B	23
	2		
446.1			
Stiff, moist, brown mottled grey, Clay to Silty Clay A7-6	1		
	3	1.8B	23
	5		
10.0	1		
	3	1.9B	21
	4		
443.1			
Stiff, moist, grey mottled brown, Clay A7-6	2		
	3	1.9B	20
	3		
440.6			
Stiff, moist, grey mottled brown Silty Clay A-6 15.0	2		
	3	1.7B	21
	4		
436.1			
Very stiff, moist, grey mottled brown, Clay A7-6	2		
	3	2.9B	20
	5		
433.6			
Stiff, moist to very moist, brown mottled grey, Clay A7-6 20.0	2		
	3	1.5B	24
	3		
433.1			
Very stiff, moist, brown, Clay A7-6	4		
	7	2.9B	17
	9		
25.0	3		

DEPTH	BLOWS	Qu tsf	W%
Very stiff, moist, brown, Clay A7-6	4	2.3B	18
	6		
428.1			
Stiff, moist, brown and black, Clay A7-6 with Coal layers	7		
	17	1.5S	20
	24		
425.6			
Hard, moist, black and brown, Coal with Clay A7-6 layers 30.0	24		
	25		
	25		
422.6	6		
Hard, dry, grey, Clay Shale	100/8"		
35.0	100/4"		
xxxxxxxxxxxxxxxxxxxxxxxxxxxx			
Free water observed at 27.5 feet			
Elevation referenced to BM 12 @ culvert; Elevation = 445.7 feet			
Borehole advanced with hollow stem auger (8" O.D, 3.25" I.D.)			
To convert "N" values to "N60" multiply by 1.25			
40.0	100/3"		
xxxxxxxxxxxxxxxxxxxxxxxxxxxx			
Hard, dry, grey, Clay Shale			
410.1 45.0	100/2"		
Bottom of hole = 44.7 feet			
50.0			

N-Std Penetr Test: 2" OD Sampler 140# Hammer, 30" Fall (Type Fail, B-Bulge S-Shear E-Estimated P-Penetrometer)

ILLINOIS DEPARTMENT OF TRANSPORTATION
District Nine Materials

Bridge Foundation
Boring Log
Sheet 1 of 1

Wolf Creek Road Over FAP 331 (IL 13)

Route: FAP 331 (IL 13) Structure Number: Date: 11/17/2010

Section (1-4,1-3)R-2... Bored By: R Moberly

County: Williamson Location: Intersection of IL 13 and Wolf Creek Checked By: R Graeff

Boring No 2-8
Station 520486
Offset 32' Rt CL WBL
Ground Surface 453.0 Ft

Surf Wat Elev:
Ground Water Elevation
when Drilling 423.5
At Completion
At: Hrs:

DEPTH	BLOWS	Qu tsf	W%
Asphalt, Concrete & crushed aggregate			
453.0			
Hard, damp to moist, brown and grey, Silty Clay to Silty Clay Loam A-6	2		
	6	5.0S	16
	6		
448.5			
Stiff, moist, brown and grey, Silty Clay A-6 5.0			
	3	1.6B	22
	4		
446.0			
Medium, moist to very moist, grey, Silty Clay A-6	1		
	2	0.9B	23
	2		
443.5			
Very stiff, moist, grey mottled brown, Clay to Silty Clay A7-6 10.0	1		
	3	2.7B	26
	5		
441.0			
Stiff, moist, grey mottled brown, Clay to Silty Clay A7-6	1		
	3	1.2B	25
	4		
15.0	1		
	3	1.2B	22
	3		
436.0			
Very stiff, moist, grey mottled brown, Clay A7-6	1		
	3	2.8B	21
	3		
20.0	2		
	4	2.9B	20
	5		
	2		
	4	2.3B	22
	4		
25.0	3		

DEPTH	BLOWS	Qu tsf	W%
Very stiff, moist, grey mottled brown, Clay A7-6	8	3.1B	17
	10		
	3		
	6	2.5B	20
	8		
423.5			
Hard, damp to moist, black and grey, Coal with Weathered Clay Shale layers 30.0	9		
	14		
	20		
420.5	19		
Hard, dry, grey Clay Shale 420.0	100/6"		
Bottom of hole = 33.0 feet			
35.0			
Free water observed at 29.5 feet			
Elevation referenced to BM 12 @ culvert; Elevation = 445.7 feet			
Borehole advanced with hollow stem auger (8" O.D, 3.25" I.D.)			
To convert "N" values to "N60" multiply by 1.25			
40.0			
50.0			

N-Std Penetr Test: 2" OD Sampler 140# Hammer, 30" Fall (Type Fail, B-Bulge S-Shear E-Estimated P-Penetrometer)

FILE NAME = c:\pw_work\pwidot\lavenderba\d0363618\I100099-978221-026-Soil_Boring_Logs.dgn	USER NAME = $USER$	DESIGNED -	REVISED -	STATE OF ILLINOIS DEPARTMENT OF TRANSPORTATION	SOIL BORING LOGS STRUCTURE NO. 100-0099	F.A.P. RTE.	SECTION	COUNTY	TOTAL SHEETS	SHEET NO.
		CHECKED -	REVISED -			331	(1-3)R-2,_N-4,_TS-4,_HBK-1	WILLIAMSON	733	383
CH2MHILL®	PLOT SCALE = 0:2.0000 ':' / in.	DRAWN -	REVISED -			DRAWING NO. BR-26		CONTRACT NO. 78221		
	PLOT DATE = 1/31/2014	CHECKED -	REVISED -		SHEET NO. 26 OF 27 SHEETS		ILLINOIS FED. AID PROJECT			

ILLINOIS DEPARTMENT OF TRANSPORTATION
District Nine Materials

Bridge Foundation
Boring Log
Sheet 1 of 1

Wolf Creek Road Over FAP 331 (IL 13)

Route: FAP 331 (IL 13) Structure Number: Date: 11/15/2010

Section: (1-4,1-3)R-2... Bored By: R Moberly

County: Williamson Location: Intersection of IL 13 and Wolf Creek Checked By: R Graeff

Boring No 3-S
Station 52L+3_
Offset 125' Rt CL WBL
Ground Surface 454.3 Ft

Surf Wat Elev:
Ground Water Elevation
when Drilling 424.8
At Completion
At: Hrs:

Description	DEPTH	BLOWS	Qu tsf	W%
Asphalt and Crushed Aggregate				
452.8				
Stiff, moist, brown mottled grey, Silty Clay to Clay A7-6		3		
		3	1.7B	24
		4		
449.8				
Very stiff, moist, grey mottled brown, Silty Clay A-6	5.0	2		
		4	2.3B	18
		4		
447.3				
Stiff, damp, brown, Silty Clay Loam A-4 with Gravel		4		
		6	1.4S	13
		7		
444.8				
Stiff, moist to very moist, grey, Silt Loam to Silty Clay Loam A-4	10.0	3		
		2	1.1B	23
		3		
442.3				
Very stiff, moist, grey mottled brown, Silty Clay A7-6		1		
		3	2.3B	23
		3		
439.8				
Stiff, moist, grey mottled brown, Silty Clay A7-6	15.0	1		
		2	1.4B	20
		2		
437.3				
Stiff, moist, brown mottled grey, Clay to Silty Clay A7-6		2		
		3	1.8B	23
		4		
434.8				
Stiff, moist, brown mottled grey, Clay A7-6	20.0	2		
		4	1.8B	21
		5		
432.3				
Very stiff, moist, brown mottled grey, Clay A7-6		2		
		4	2.7B	20
		4		
	25.0	3		

Description	DEPTH	BLOWS	Qu tsf	W%
Very stiff, moist, brown mottled grey, Clay A7-6		7	3.5B	16
		9		
		3		
		7	2.7B	16
		12		
424.8				
Very stiff, moist to damp, grey mottled brown Clay A7-6 to Weathered Clay Shale	30.0	4		
		14	2.5S	17
		25		
422.3				
Hard, dry, grey, Clay Shale		100/5"		
	35.0	100/3"		
xxxxxxxxxxxxxxxxxxxxxxxxxxxxxxx				
Free water observed at 29.5 feet				
Elevation referenced to BM 12 @ culvert; Elevation = 445.7 feet				
Bore hole advanced with hollow stem auger (8" O.D, 3.25" I.D.)				
To convert "N" values to "N60" multiply by 1.25	40.0	100/3"		
xxxxxxxxxxxxxxxxxxxxxxxxxxxxxxx				
Hard, dry, grey, Clay Shale				
409.3	45.0	100/2"		
Bottom of hole = 44.7 feet				
	50.0			

N-Std Pentr Test: 2" OD Sampler, 140# Hammer, 30" Fall (Type Fail. B-Bulge S-Shear E-Estimated P-Penetrometer)

FILE NAME = c:\pw_work\pwidot\lavenderba\d0363618\1000099-978221-027-Soil_Boring_Logs.dgn	USER NAME = $USER$	DESIGNED -	REVISED -	STATE OF ILLINOIS DEPARTMENT OF TRANSPORTATION	SOIL BORING LOGS STRUCTURE NO. 100-0099	F.A.P. RTE. 331	SECTION (1-3)R-2,_N-4,_TS-4,_HBK-1	COUNTY WILLIAMSON	TOTAL SHEETS 733 / SHEET NO. 384
CH2MHILL®	PLOT SCALE = 0:2.0000 ':" / in.	CHECKED -	REVISED -			DRAWING NO. BR-27		CONTRACT NO. 78221	
	PLOT DATE = 1/31/2014	DRAWN -	REVISED -		SHEET NO. 27 OF 27 SHEETS		ILLINOIS FED. AID PROJECT		
		CHECKED -	REVISED -						

THIS SHEET LEFT INTENTIONALLY BLANK

THIS SHEET LEFT INTENTIONALLY BLANK

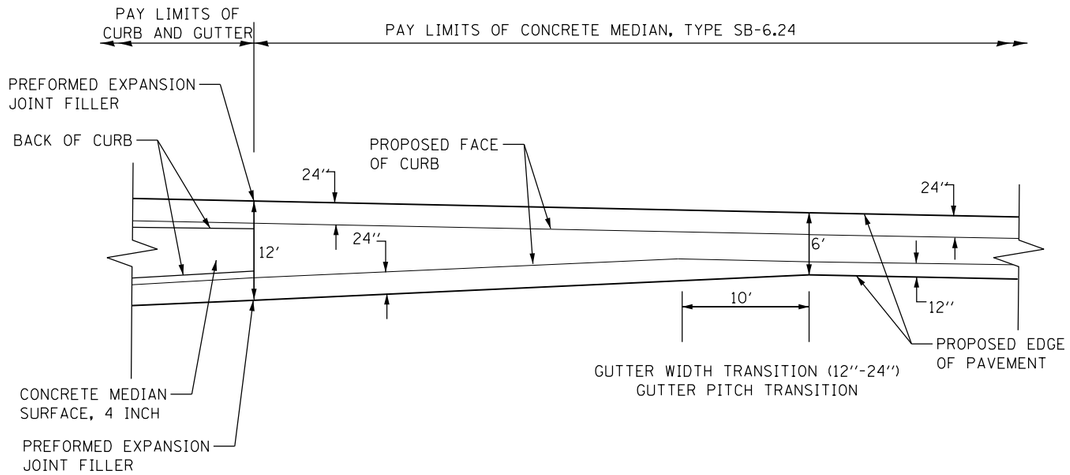

CONCRETE MEDIAN, TYPE SB–6.24 AT TURN BAYS

N.T.S.

NOTE:

1. CONCRETE MEDIAN, TYPE SB-6.24 (SPECIAL) SHALL BE CONSTRUCTED IN ACCORDANCE WITH APPLICABLE PORTIONS OF STANDARD 606301.

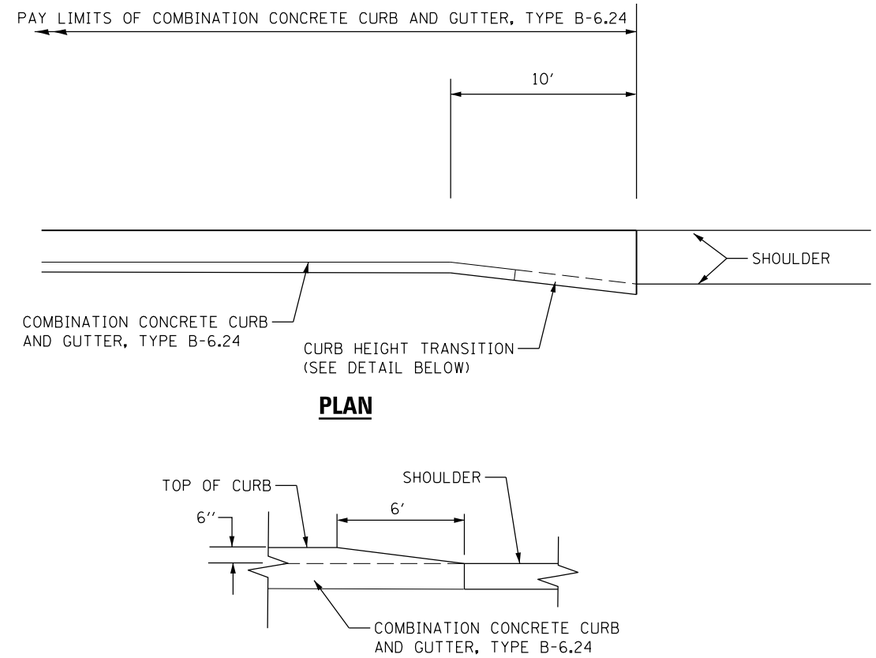

CURB HEIGHT TRANSITION DETAIL

DETAIL – B–6.24 CURB TRANSITION TO SHOULDER

N.T.S.

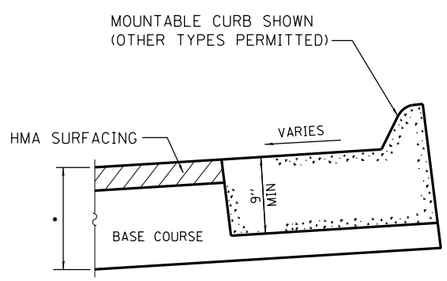

• THICKNESS AND COMPOSITION OF PAVEMENT AS SHOWN IN PLANS

TOP SIDE CURB AND GUTTER – SUPERELEVATED CURBED SECTIONS REJECT SLOPED CURB AND GUTTER

N.T.S.

NOTES:

1. FOR LIMITS OF REJECT SLOPED CURB AND GUTTER, SEE TYPICAL SECTION DRAWINGS.
2. REJECT SLOPE CURB AND GUTTER PAID FOR AS CURB AND GUTTER PAY ITEM DESCRIBED IN PLANS. NO ADDITIONAL COMPENSATION FOR GUTTER SLOPE MODIFICATION.

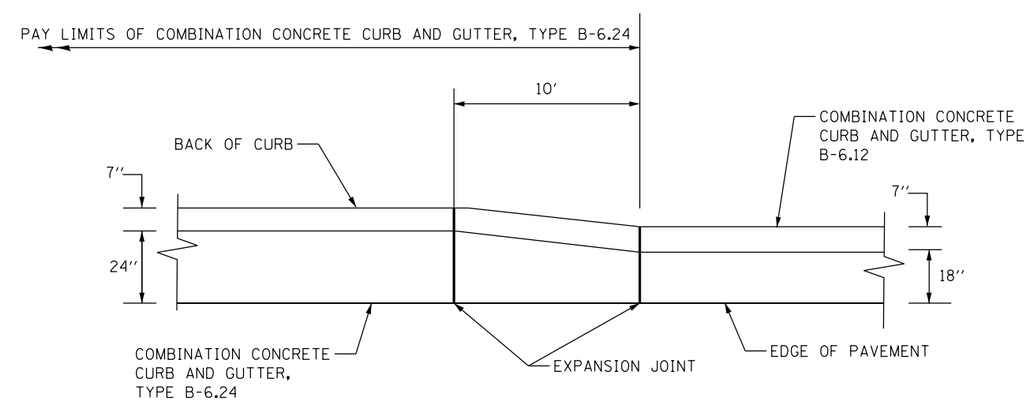

B–6.24 CURB TRANSITION TO B–6.12

N.T.S.

FILE NAME = c:\pw_work\pwidot\lavenderba\d0363618\D78221-sht-details-rd-01.dgn	USER NAME = $USER$	DESIGNED - KN	REVISED -
		DRAWN - AS	REVISED -
	PLOT SCALE = 2.0000 ′ / in.	CHECKED -	REVISED -
	PLOT DATE = 1/31/2014	DATE -	REVISED -

STATE OF ILLINOIS
DEPARTMENT OF TRANSPORTATION

ROADWAY DETAILS
CURB TRANSITIONS

SCALE: | SHEET NO. 1 OF 6 SHEETS | STA. | TO STA.

F.A.P. RTE.	SECTION	COUNTY	TOTAL SHEETS	SHEET NO.
331	(1-3)R-2, N-4, TS-4, HBK-1	WILLIAMSON	733	387
DRAWING NO. RD–01		CONTRACT NO. 78221		
		ILLINOIS FED. AID PROJECT		

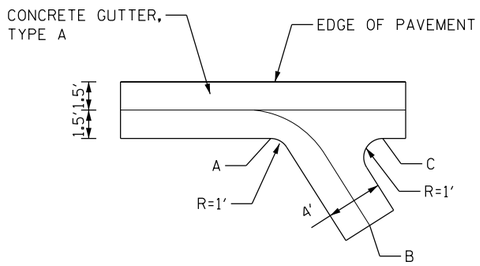

TYPE A GUTTER OUTLET

NOT TO SCALE

NOTES:

1. FOR CURB OUTLET REINFORCEMENT BAR INFORMATION, SEE STANDARD 606001 AND STANDARD 606006.
2. CURB OUTLET TO BE PAID FOR AS CLASS SI CONCRETE (OUTLET) FOR ENTIRE LIMITS AS SHOWN IN DETAIL.

LOCATION	A	B	C
WOLF CREEK RD	+64.32	+70.70	+70.17
STA 116+67 RT	11.2' RT	17.5' RT	11.1' RT
NORTH FRONTAGE RD	+14.45	+19.94	+20.36
STA 128+17 RT	13.1' RT	17.4' RT	12.7' RT

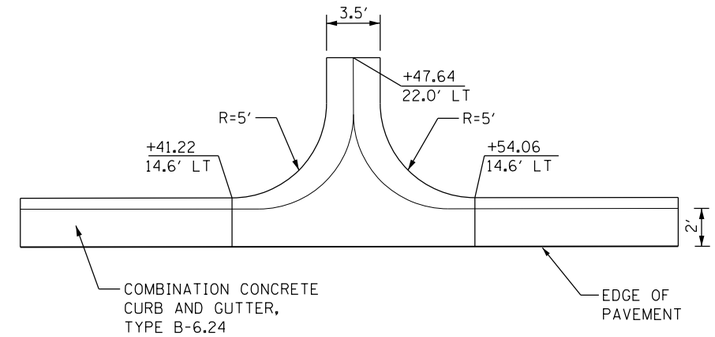

NORTH FRONTAGE RD CURB OUTLET

STA 106+47 LT

NOT TO SCALE

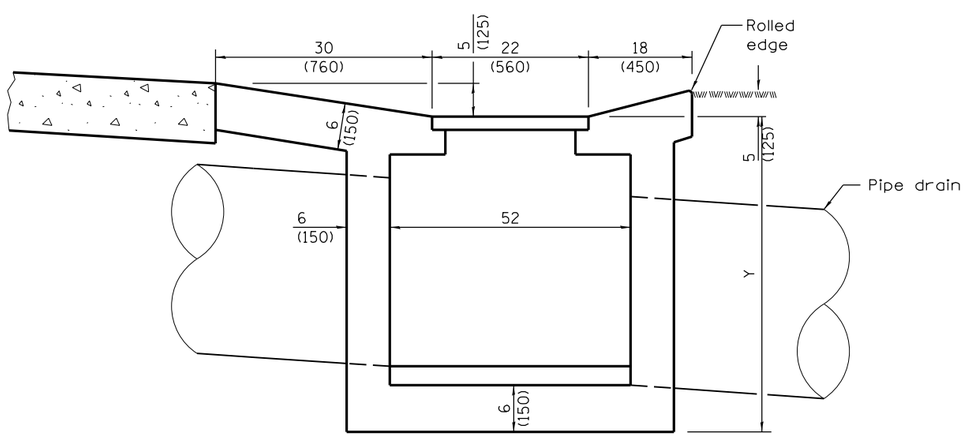

SECTION D–D

Y = 50

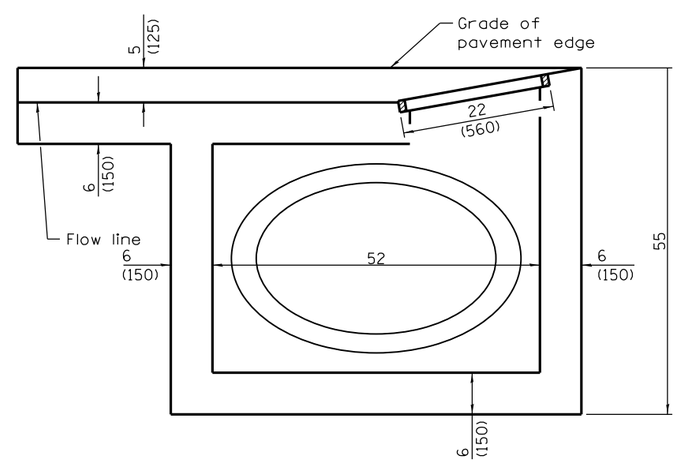

SECTION F–F

Notes:

1. See Highway Standard 606106-04 for more details

FILE NAME = c:\pw_work\pwidot\lavenderba\d0363618\D178221-sht-details-rd-02.dgn	USER NAME = $USER$	DESIGNED - KN	REVISED -
		DRAWN - AS	REVISED -
	PLOT SCALE = 2.0036 ' / in.	CHECKED -	REVISED -
	PLOT DATE = 1/31/2014	DATE -	REVISED -

STATE OF ILLINOIS
DEPARTMENT OF TRANSPORTATION

ROADWAY DETAILS
MISCELLANEOUS

SCALE: | SHEET NO. 2 OF 6 SHEETS | STA. | TO STA.

F.A.P. RTE.	SECTION	COUNTY	TOTAL SHEETS	SHEET NO.
331	(1-3)R-2, N-4, TS-4, HBK-1	WILLIAMSON	712	388
DRAWING NO. RD-02		CONTRACT NO. 78221		
		ILLINOIS FED. AID PROJECT		

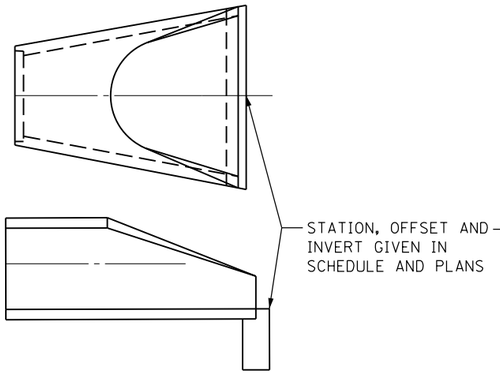

CONC. END SECTIONS

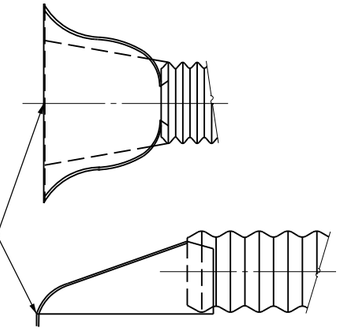

METAL END SECTIONS

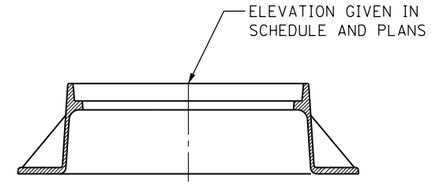

TYPE 1 FRAME AND LID

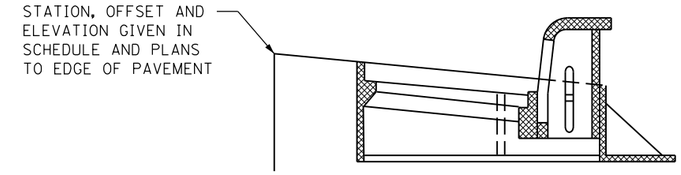

TYPE 11 FRAME AND GRATE

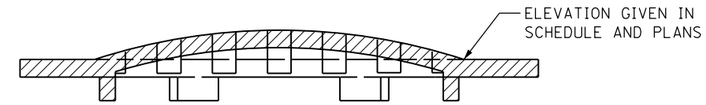

TYPE 8 GRATE

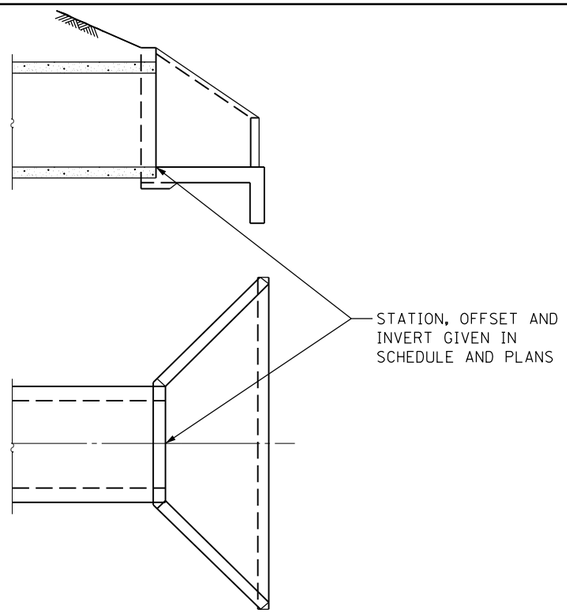

BOX CULVERT END SECTIONS

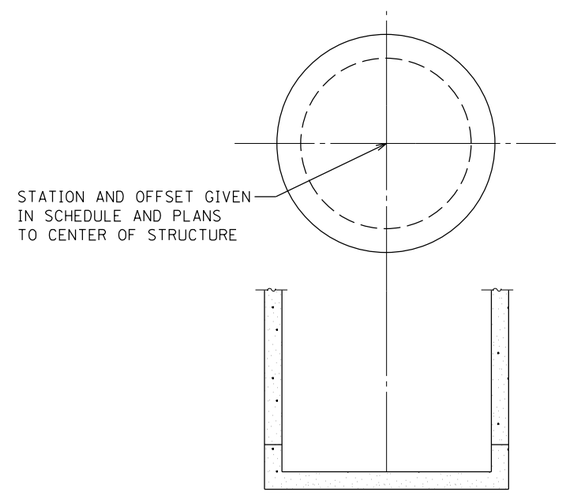

MANHOLES AND INLETS, TYPE A & B

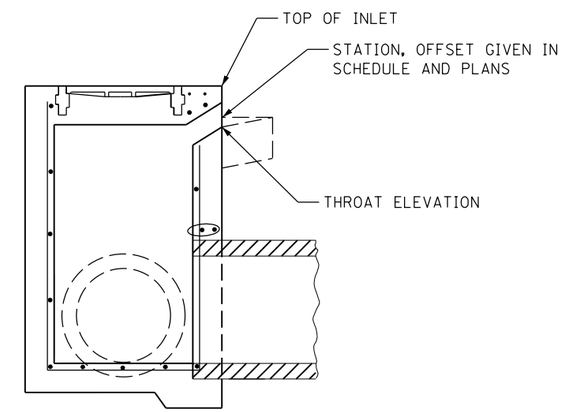

SECTION

INLETS, SPECIAL

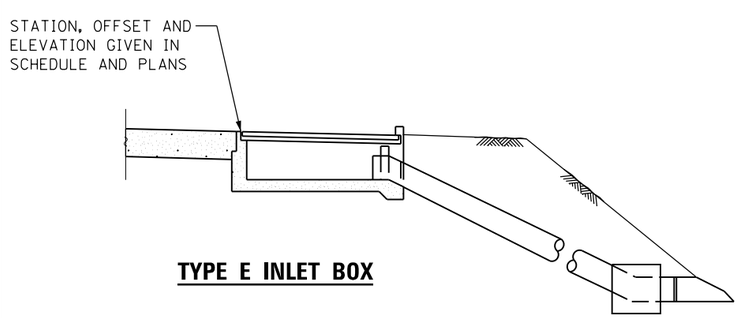

TYPE E INLET BOX

FILE NAME = c:\pw_work\pwidot\lavenderba\d0363618\D78221-sht-details-rd-03.dgn	USER NAME = $USER$	DESIGNED - KN	REVISED -
		DRAWN - AS	REVISED -
	PLOT SCALE = 2.0000 ' / in.	CHECKED -	REVISED -
	PLOT DATE = 1/31/2014	DATE -	REVISED -

STATE OF ILLINOIS
DEPARTMENT OF TRANSPORTATION

ROADWAY DETAILS
DRAINAGE STRUCTURE REFERENCE POINTS

SCALE: | SHEET NO. 3 OF 6 SHEETS | STA. TO STA.

F.A.P. RTE.	SECTION	COUNTY	TOTAL SHEETS	SHEET NO.
331	(1-3)R-2, N-4, TS-4, HBK-1	WILLIAMSON	733	389
DRAWING NO. RD-03		CONTRACT NO. 78221		
		ILLINOIS FED. AID PROJECT		

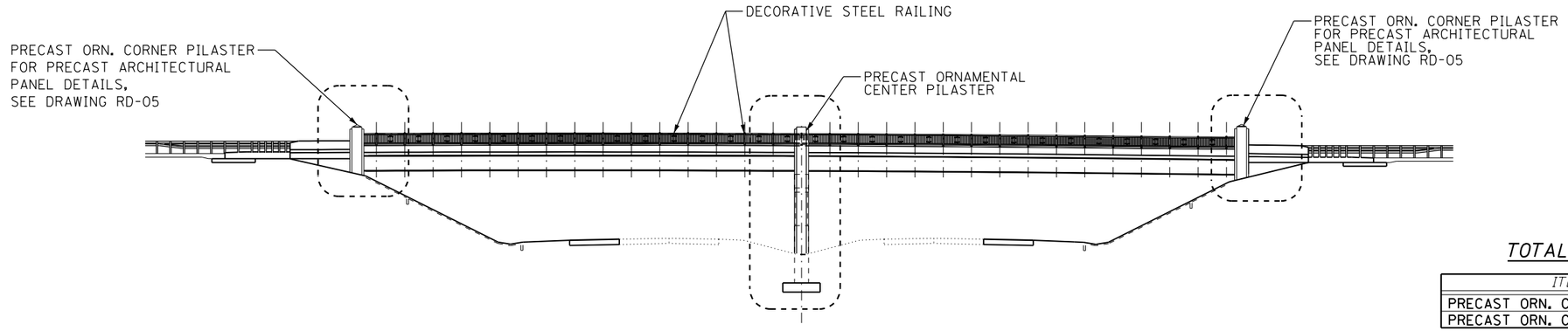

ELEVATION

TOTAL BILL OF MATERIAL

ITEM	UNIT	TOTAL
PRECAST ORN. CENTER PILASTER	EACH	2
PRECAST ORN. CORNER PILASTER	EACH	4

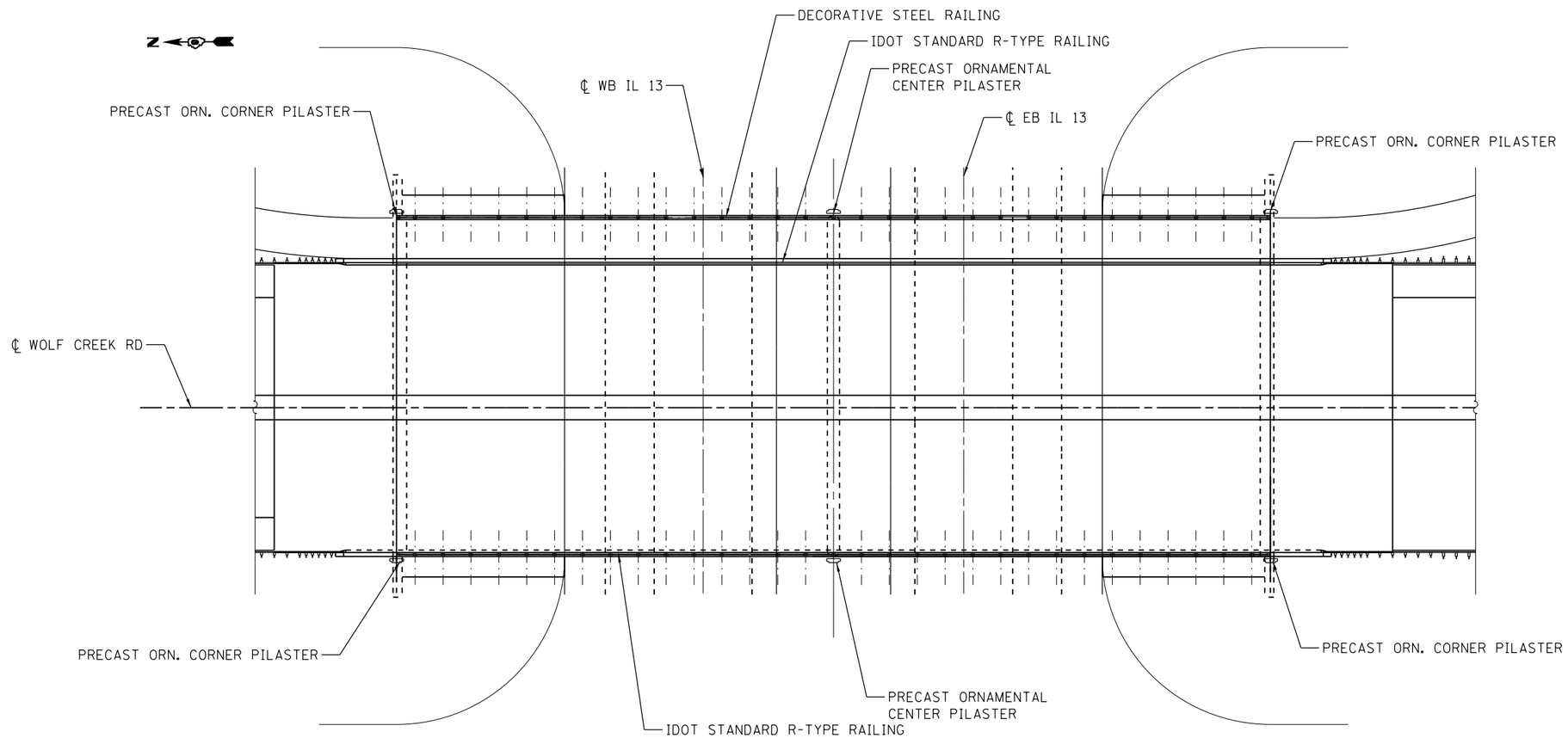

PLAN

NOTES:

1. FOR ADDITIONAL BRIDGE DETAILS, SEE GENERAL BRIDGE PLANS.
2. PRECAST ORN. PILASTERS ARE DETAILED ON DRAWING RD-05 AND BR-25.

FILE NAME = c:\pw_work\pwidot\colemm\d0363618\D978221-sht-details-rd-04.dgn	USER NAME = colemm	DESIGNED - KN	REVISED -
		DRAWN - AS	REVISED -
	PLOT SCALE = 32.0000 ' / in.	CHECKED -	REVISED -
	PLOT DATE = 2/27/2014	DATE -	REVISED -

STATE OF ILLINOIS
DEPARTMENT OF TRANSPORTATION

ROADWAY DETAILS
ORNAMENTAL PRECAST PILASTER

SCALE: | SHEET NO. 4 OF 6 SHEETS | STA. | TO STA.

F.A.P. RTE.	SECTION	COUNTY	TOTAL SHEETS	SHEET NO.
331	(1-3)R-2, N-4, TS-4, HBK-1	WILLIAMSON	733	390

DRAWING NO. RD-04 | CONTRACT NO. 78221

ILLINOIS FED. AID PROJECT

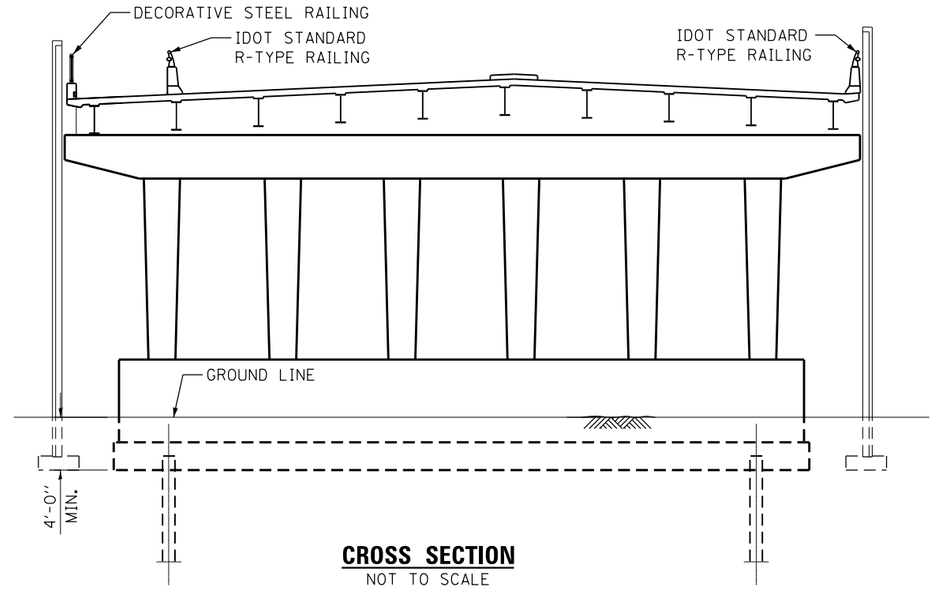

CROSS SECTION
NOT TO SCALE

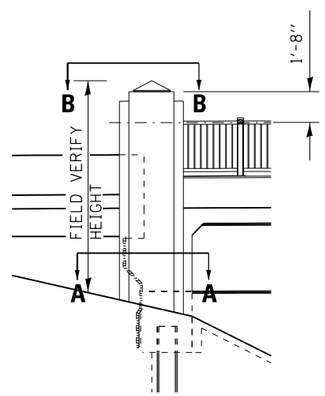

PRECAST PILASTER ELEVATION DETAIL
NOT TO SCALE

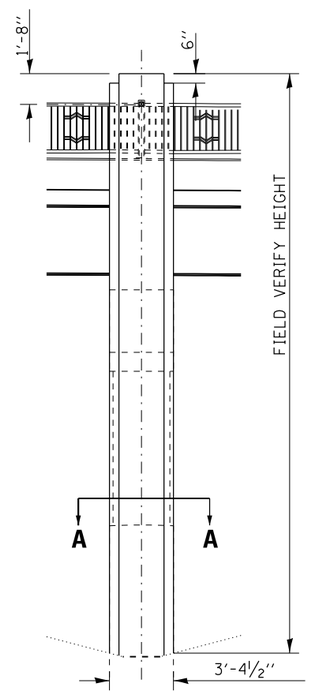

PRECAST PILASTER ELEVATION DETAIL
NOT TO SCALE

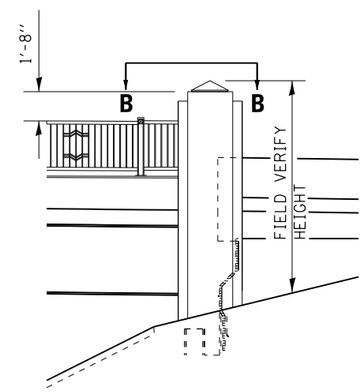

PRECAST PILASTER ELEVATION DETAIL
NOT TO SCALE

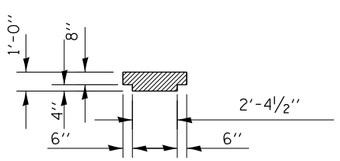

SECTION A–A
NOT TO SCALE

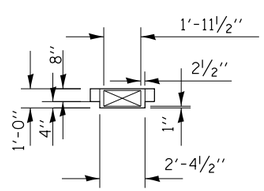

SECTION B–B
NOT TO SCALE

NOTES:

1. FOR ADDITIONAL BRIDGE DETAILS, SEE GENERAL BRIDGE PLANS.
2. FOR PLAN AND ELEVATION OF PRECAST PILASTERS, SEE DRAWING RD-05 AND BR-25.

FILE NAME =	USER NAME = colemm	DESIGNED - KN	REVISED -	STATE OF ILLINOIS DEPARTMENT OF TRANSPORTATION		F.A.P. RTE.	SECTION	COUNTY	TOTAL SHEETS	SHEET NO.
c:\pw_work\pwidot\colemm\d0363618\D978221-sht-details-rd-05.dgn		DRAWN - AS	REVISED -			331	(1-3)R-2, N-4, TS-4, HBK-1	WILLIAMSON		
	PLOT SCALE = 32.0000 ' / in.	CHECKED -	REVISED -			DRAWING NO.		CONTRACT NO. 78221		
	PLOT DATE = 2/27/2014	DATE -	REVISED -		SCALE: SHEET NO. OF SHEETS STA. TO STA.		ILLINOIS	FED. AID PROJECT		

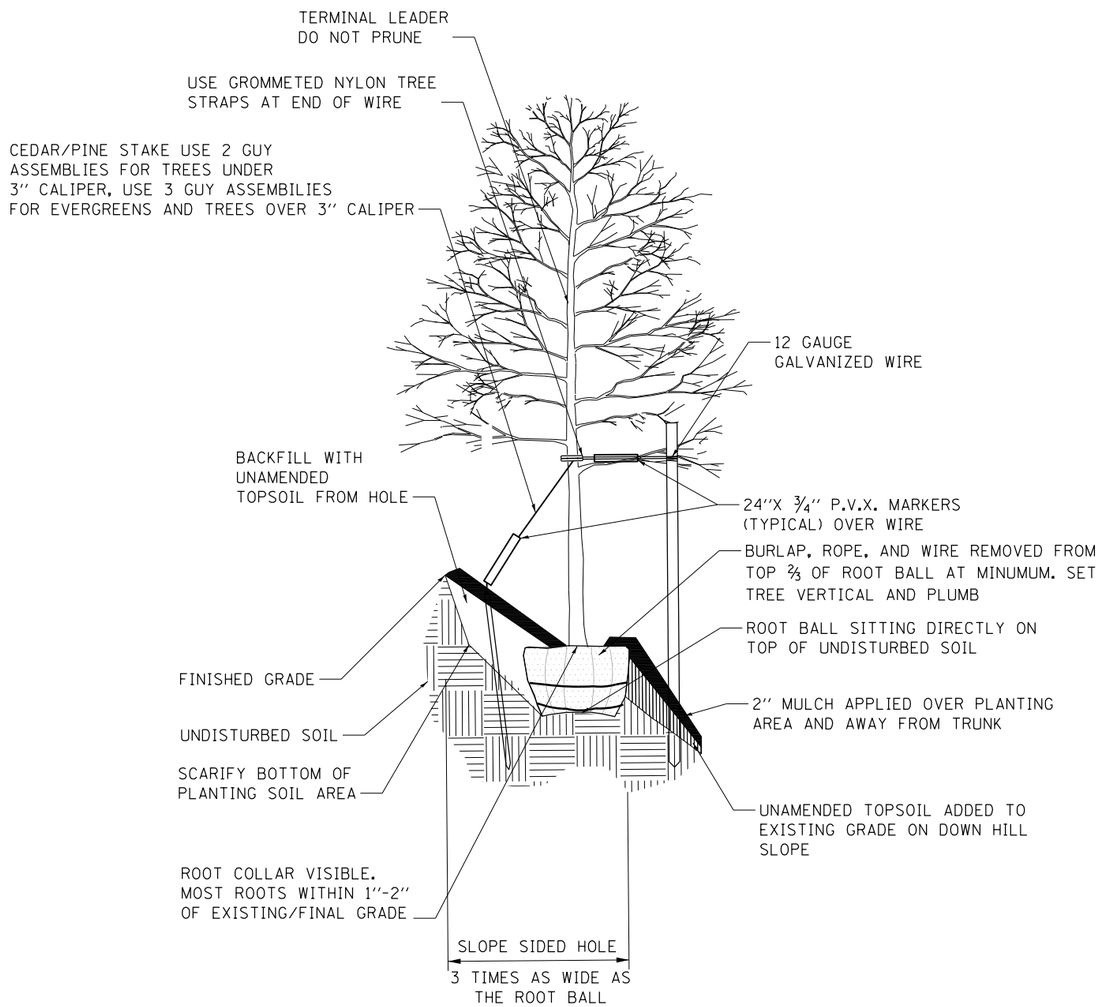

TREE PLANTING DETAIL ON SLOPE

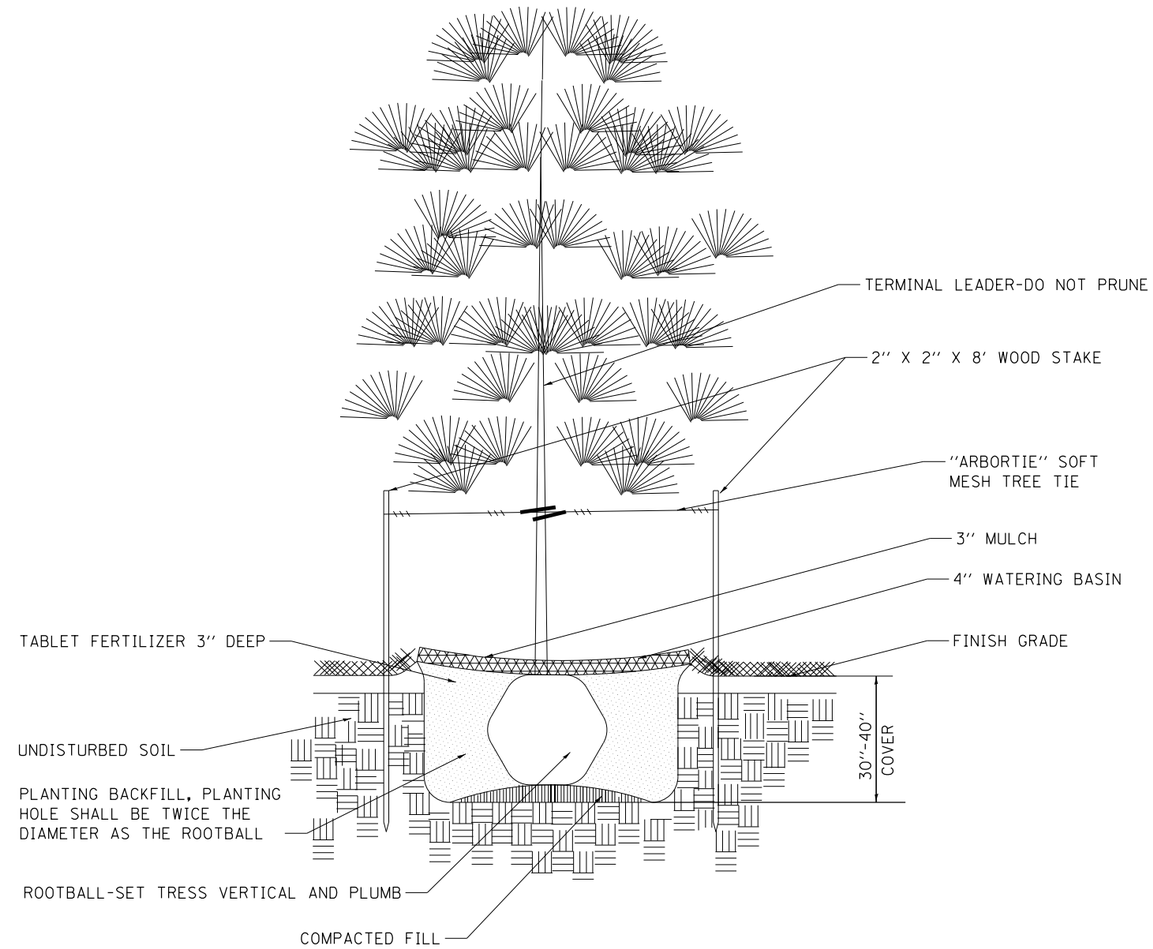

PINE TREE PLANTING DETAIL

NOTES:

1. ALL PLANTS SHALL BE MULCHED WITH 3 IN. MIN. OF HARDWOOD MULCH.
2. ALL TREES AND SHRUBS SHALL HAVE 2 FOOT RADIUS MIN. MULCH RING.
3. CONTRACTOR SHALL REMOVE ALL GROW STAKES, TAGS, RIBBONS, OR LABELS FROM ALL PLANTS.
4. BROKEN OR CRUMBLING ROOT BALLS WILL BE REJECTED.

DETAILS OF INLETS, SPECIAL

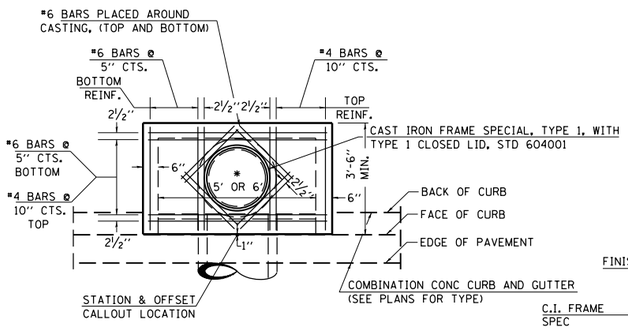

* SEE DRAINAGE PLAN FOR LOCATION TO USE EITHER 5' OR 6' INTERIOR

PLAN

"D" TABLE

DESIGN	PIPE DIA	"D"
A	18"&LESS	2'-6"
B	21"&24"	3'-0"
C	27"&30"	3'-7"
D	33"&36"	4'-2"
E	42"	4'-9"
F	48"	5'-0"
G	54"	6'-1"

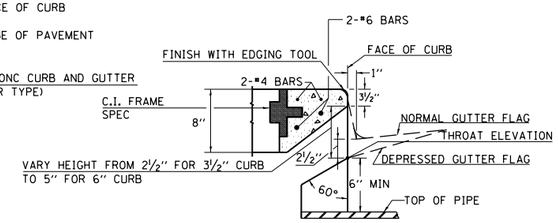

SECTION AT WEIR

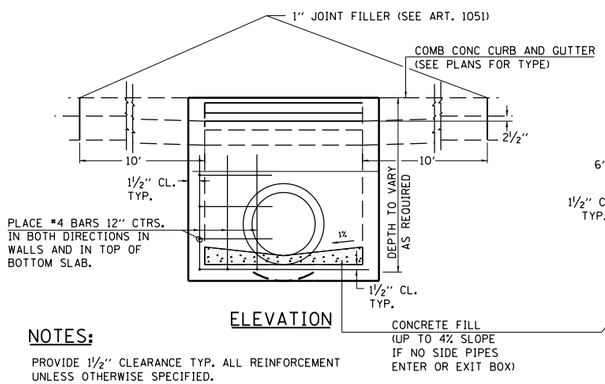

ELEVATION

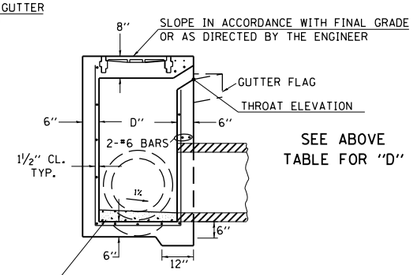

SEE ABOVE TABLE FOR "D"

SECTION

NOTES:

PROVIDE 1½" CLEARANCE TYP. ALL REINFORCEMENT UNLESS OTHERWISE SPECIFIED.

GUTTER FLOWLINE AT INLET 2½" BELOW NORMAL GUTTER FLOWLINE. CONSTRUCT TRANSITION IN FLOWLINE IN 10 FEET EACH SIDE OF INLET. PIPES TO BE CONNECTED TO INLET AS SHOWN ON STORM SEWER LAYOUT.

INLETS WILL BE PAID FOR AT THE CONTRACT UNIT PRICE EACH FOR **INLETS, SPECIAL.** WHICH PRICE SHALL INCLUDE THE CAST IRON FRAME, SPECIAL, TYPE 1 WITH TYPE 1 CLOSED LID, THE REINFORCEMENT BARS, METAL STEPS AND JOINT FILLER.

IF THE INLET IS NOT CAST IN PLACE THEN THE INLET SHALL BE PRODUCED ACCORDING TO THE DEPARTMENT'S CURRENT STANDARD SPECIFICATIONS SECTIONS 602 AND 1042.

**STEPS WILL BE REQUIRED AT 12" SPACING WHEN INLET IS OVER 4' DEEP. SEE ARTICLE 602.08 OF THE STANDARD SPECS AND DETAILS

CAST IRON STEPS SHALL BE GRAY IRON CONFORMING TO THE REQUIREMENTS OF ARTICLE 1006.14 OF THE STANDARD SPECIFICATIONS.

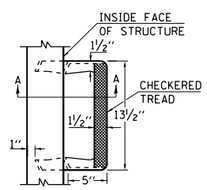

** CAST IRON STEPS

TREAD DIMENSION DETAILS SEE HWY STD 602701

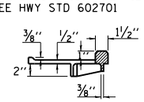

SEC. A-A

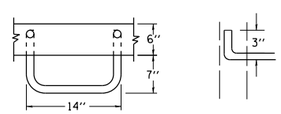

** GALVANIZED IRON STEPS

1" ROUND GALVANIZED IRON STEPS 12" O.C. (OPTIONAL STEPS)

REVISIONS

REDRAWN	2-15-89	REVISED	3-26-08
REVISED	8-15-94	REVISED	4-10-13
REVISED	1-19-99	REVISED	
REVISED	5-6-04	REVISED	

STD. 9-1

ENERGY DISSIPATOR

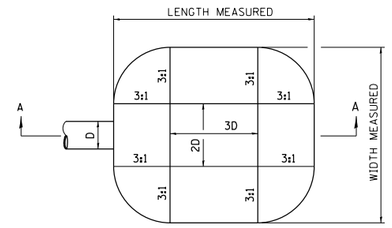

D= INSIDE DIAMETER OF PIPE CULVERT OR CLEAR HEIGHT OF BOX CULVERT

PLAN

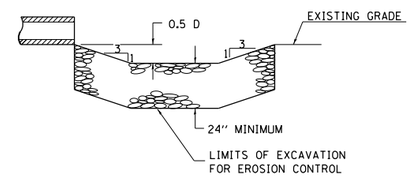

SECTION A-A

EARTH EXCAVATION FOR ENERGY DISSIPATOR

THIS WORK INVOLVES THE EXCAVATION OF EARTH AS SHOWN IN THE SKETCH TO THE LENGTH, WIDTH, AND DEPTH AS SPECIFIED. THE EARTH EXCAVATION WILL BE UTILIZED IN THE ROADWAY EMBANKMENT OR WASTED AS DIRECTED BY THE ENGINEER. THE EXCAVATION SHALL BE PERFORMED AT THE SAME TIME AS THE CULVERT OR DITCH IS CONSTRUCTED TO SERVE AS A TEMPORARY SEDIMENT TRAP.

EARTHWORK WILL BE CONSIDERED INCLUDED IN THE COST OF THE RIPRAP.

ENERGY DISSIPATOR IS TO BE CONSTRUCTED AT THE LOCATION INDICATED ON THE PLAN AND PROFILE SHEETS.

RIPRAP FOR ENERGY DISSIPATOR

RIPRAP FOR ENERGY DISSIPATOR SHALL BE CONSTRUCTED IN ACCORDANCE WITH SECTION 281 OF THE STANDARD SPECIFICATIONS EXCEPT AS REVISED HEREIN.

THE LENGTH, WIDTH, AND DEPTH FOR RIPRAP PLACEMENT SHALL BE AS SPECIFIED IN THESE DETAILS UNLESS OTHERWISE SPECIFIED IN THE PLANS. THE OUTSIDE CORNERS CAN BE ROUNDED OR SQUARED.

THE RIPRAP FOR THE ENERGY DISSIPATOR SHALL BE PAID FOR AT THE CONTRACT UNIT PRICE PER SQUARE YARD FOR **STONE DUMPED RIPRAP.**

THE STONE DUMPED RIPRAP SHALL CONFORM TO THE QUALITY AND GRADATION REQUIREMENTS OF STONE RIPRAP, CLASS A4.

FILTER FABRIC AND BEDDING MATERIAL AS SPECIFIED IN SECTION 281 OF THE STANDARD SPECIFICATIONS WILL NOT BE REQUIRED.

REVISIONS

REDRAWN	2-15-89
REVISED	11-3-93
REVISED	8-15-94
REVISED	12-14-01
REVISED	3-26-08
REVISED	5-16-13

STD 9-6

EXPANSION BOLTS REQUIRED FOR CULVERT EXTENSIONS

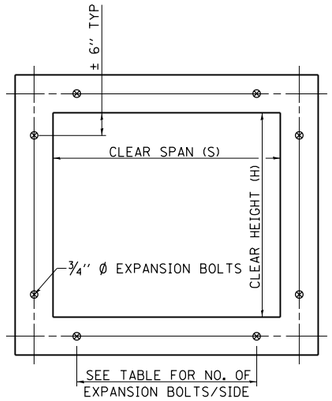

CROSS SECTION THRU BARREL

FOR ANCHOR BOLT REQUIREMENTS, SEE ARTICLE 1006.09 OF THE STANDARD SPECIFICATIONS.

EXPANSION BOLTS SHALL CONSIST OF SELF DRILLING EXPANSION SHIELDS AND ¾" Ø HOOKED BOLTS. HOOKED BOLTS SHALL EXTEND A MINIMUM OF 9" INTO NEW CONCRETE.

MINIMUM CERTIFIED PROOF LOAD=7500 LBS.

BOLTS SHALL BE PAID FOR AT THE CONTRACT UNIT PRICE EACH FOR **EXPANSION BOLTS, ¾ INCH.**

H OR S	NO. EXPANSION BOLTS REQ'D/SIDE			
	EXTENSION ≤ 15'		EXTENSION >15'	
	NO.	SPACING	NO.	SPACING
2.0	*	*	*	*
2.5	2	18"	2	18"
3.0	2	24"	2	24"
4.0	3	18"	3	18"
5.0	4	16"	3	24"
6.0	5	15"	4	20"
7.0	5	18"	4	24"
8.0	6	17"	5	21"
9.0	6	19"	5	24"
10.0	7	18"	6	21"
11.0	8	17"	6	24"
12.0	8	19"	7	22"

* NOTE: USE MINIMUM OF 1 EXPANSION BOLT AT EACH CORNER.

EXAMPLE:

6' X 4' BOX CULVERT TO BE EXTENDED 18' AT ONE END ONLY.

FROM TABLE FIND:

6' SIDE REQUIRES (4)-¾" Ø EXPANSION BOLTS AT 20" CENTERS

4' SIDE REQUIRES (3)-¾" Ø EXPANSION BOLTS AT 18" CENTERS

TOTAL NO. REQUIRED
(4+3)2 = (14)-¾" Ø EXPAN. BOLTS

REVISIONS

REDRAWN	2-15-89
REVISED	8-15-94
REVISED	12-14-01
REVISED	3-26-08
REVISED	5-16-13

STD. 9-9

FILE NAME = c:\pw_work\pwidot\lavenderba\d0363618\D978221-sht-details-dd-01.dgn	USER NAME = $USER$	DESIGNED - KN	REVISED -
		DRAWN - AS	REVISED -
	PLOT SCALE = 2.0000 ' / in.	CHECKED -	REVISED -
	PLOT DATE = 1/31/2014	DATE -	REVISED -

STATE OF ILLINOIS
DEPARTMENT OF TRANSPORTATION

DISTRICT DETAILS
9-1, 9-6, 9-9

SCALE: | SHEET NO. 1 OF 8 SHEETS | STA. | TO STA.

F.A.P. RTE.	SECTION	COUNTY	TOTAL SHEETS	SHEET NO.
331	(1-3)R-2, N-4, TS-4, HBK-1	WILLIAMSON	733	393
DRAWING NO. DD-01		CONTRACT NO. 78221		
		ILLINOIS FED. AID PROJECT		

DETAILS OF PERMANENT SURVEY MARKERS

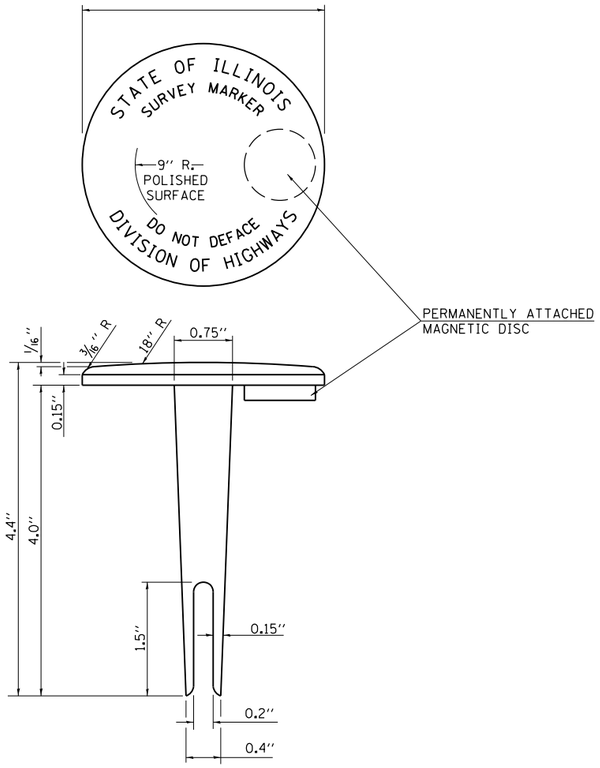

TABLET - BRONZE OR ALUMINUM

PRECAST MARKER

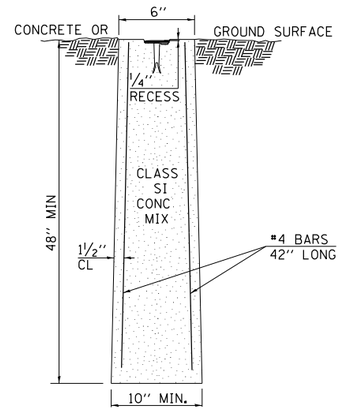

SECTION

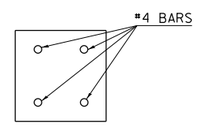

PLAN

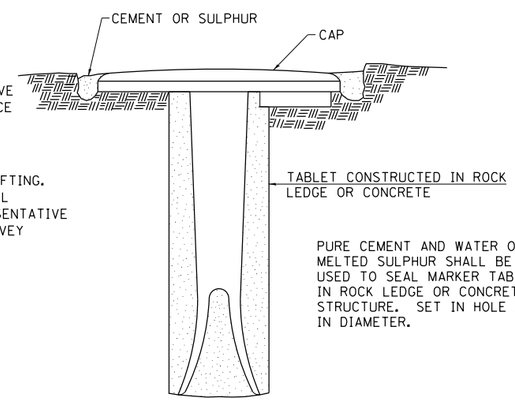

PURE CEMENT AND WATER OR MELTED SULPHUR SHALL BE USED TO SEAL MARKER TABLET IN ROCK LEDGE OR CONCRETE STRUCTURE. SET IN HOLE 1.5" IN DIAMETER.

NOTES

1. ACTUAL LOCATIONS TO BE DETERMINED BY THE ENGINEER AND A REPRESENTATIVE FROM THE BUREAU OF DESIGN AFTER GRADING IS COMPLETE AND SIGHT DISTANCE CAN BE DETERMINED BETWEEN SURVEY MARKER LOCATIONS.
2. THE MARKERS SHALL BE PRECAST AND SHALL BE INSTALLED IN A WORKMANLIKE MANNER IN ORDER THAT THERE BE NO FUTURE SETTLEMENT OR HORIZONTAL SHIFTING. THE MONUMENT SHALL BE PLACED IN A WAY THAT THE SURVEY POINT WILL FALL WITHIN THE PORTION OF THE PLAQUE PROVIDED FOR THAT PURPOSE. A REPRESENTATIVE FROM THE BUREAU OF PROGRAM DEVELOPMENT WILL LOCATE AND ETCH THE SURVEY POINT ON THE TABLET.
3. THE CONTRACT UNIT PRICE FOR **PERMANENT SURVEY MARKERS** WILL BE PAYMENT IN FULL FOR FURNISHING AND INSTALLING THE MARKER.

TOTAL QUANTITY FOR
PERMANENT SURVEY MARKERS=

DESIGN NOTE: 2000' SPACING DESIRABLE FOR RURAL
1000' SPACING DESIRABLE FOR URBAN

REVISIONS

REDRAWN	2-15-89	REVISED	3-27-08
REVISED	5-11-89	REVISED	
REVISED	8-18-94	REVISED	
REVISED	10-3-94	REVISED	

STD. 9-10

TYPICAL SECTIONS OF TRANSITIONS OF SLOPES AND INCIDENTAL GRADING

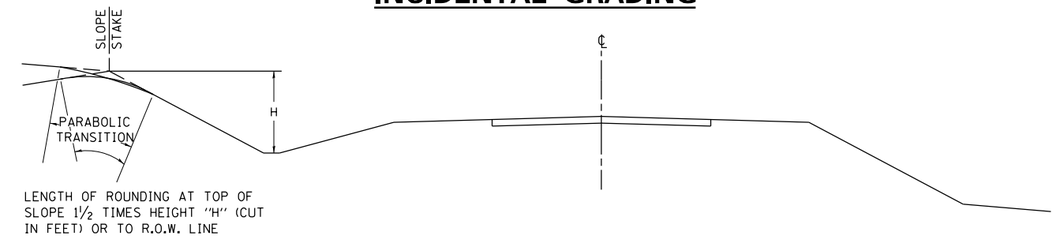

SECTION SHOWING TRANSITIONS OF PROPOSED SLOPES

NOTE:

DITCH PLUG TO BE CONSTRUCTED AS DIRECTED BY THE ENGINEER, INCLUDED IN THE EARTH EXCAVATION

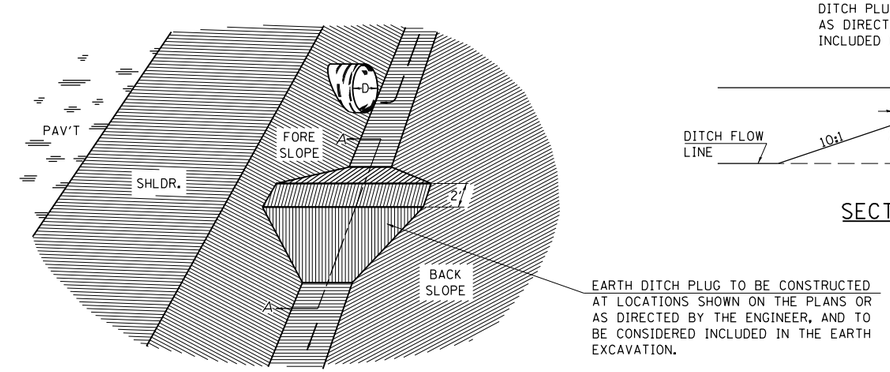

DITCH PLUG DETAIL

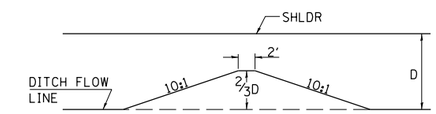

SECTION A-A

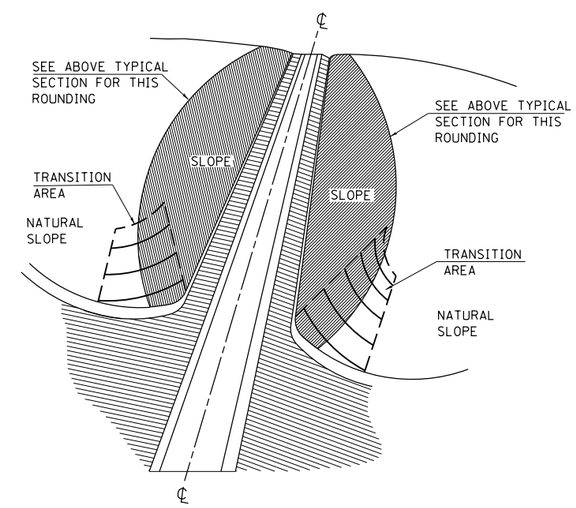

DETAIL OF SLOPE TO NATURAL GROUND TRANSITION

TRANSITION GRADING

TRANSITION GRADING BETWEEN CUT AND FILL SLOPES AND BETWEEN CUT SLOPES AND NATURAL GROUND WILL BE REQUIRED ON THIS IMPROVEMENT. THE TRANSITION SHALL BE ROUNDED AND STREAMLINED IN ORDER TO BLEND THE CUT SLOPES AND THE FILL SLOPES INTO EACH OTHER AND INTO THE ADJACENT TERRAIN. THE SLOPES AS SHOWN ON THE CROSS SECTIONS IN THESE PLANS MAY BE VARIED SOMEWHAT IN THE TRANSITION AREAS AS DIRECTED BY THE ENGINEER IN ORDER TO MEET THIS GRADING REQUIREMENT. THE QUANTITIES OF EARTH EXCAVATION INVOLVED ARE INCLUDED IN THE BALANCE QUANTITIES SHOWN ON THE PLANS AND NO OTHER COMPENSATION WILL BE ALLOWED.

REVISIONS

REDRAWN	2-15-89
RESIZED	5-8-08

STD. 9-17

WIRING DIAGRAM FOR LIGHTING

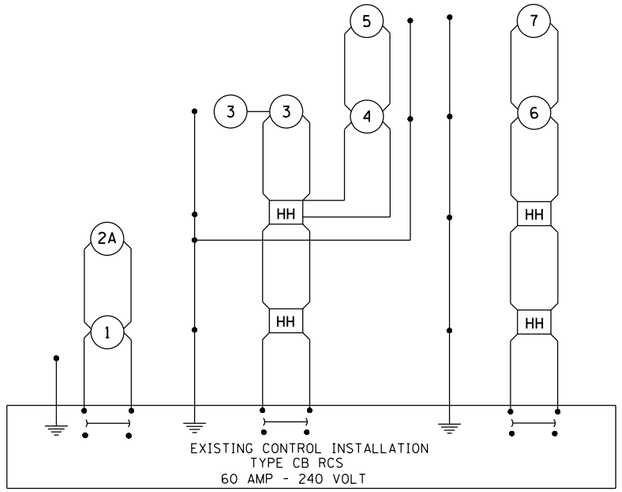

NOTES:

1. FOR SIZE AND TYPE OF CABLE USED FOR LIGHTING INSTALLATION SEE CABLE DIAGRAM SHEET NO. .
2. POWER TO CONTROL INSTALLATION SHALL REMAIN AS IS.

LEGEND FOR WIRING DIAGRAM

HH — INDICATES PROPOSED TRAFFIC SIGNAL HANDHOLE.
NOTE: THE SIGNAL CONDUIT SYSTEM SHALL BE UTILIZED TO INSTALL WIRING FOR ALL THE PROPOSED LIGHTING SYSTEM, EXCEPT FOR LIGHT POLES NO. .

(1) — NUMBER INDICATES POSITION OF POLE IN WIRING DIAGRAM.

● — INDICATES PROPOSED GROUND AT LIGHT POLE AND CONTROL INSTALLATION.

⏚ — INDICATES CONTINUOUS GROUND FROM CONTROL INSTALLATION.

REVISIONS	
DRAWN	7-27-93
REVISED	5-14-02
RESIZED	5-8-08
REVIEWED	5-17-13

STD. 9-59

SERVICE INSTALLATION DETAILS

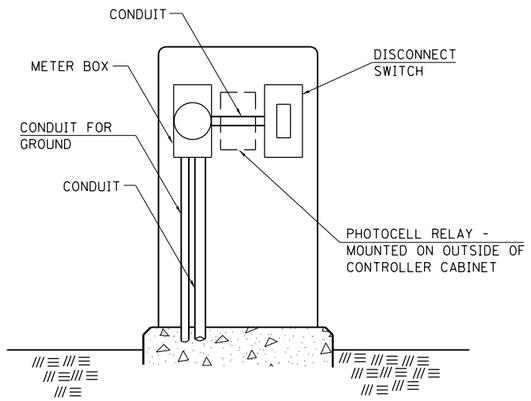

SERVICE INSTALLATION (SPECIAL) WITH PHOTOCELL RELAY

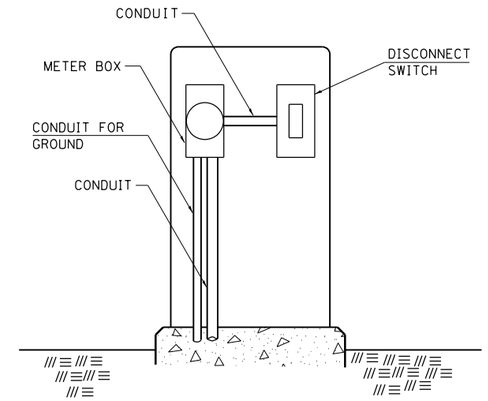

SERVICE INSTALLATION (SPECIAL)

NOTE:

MATERIAL AND SIZE OF CONDUIT AND CABLE AS REQUIRED BY UTILITY COMPANY

REVISIONS	
DRAWN	1-31-90
REVISED	2-24-92
RESIZED	5-7-08
REVIEWED	5-17-13

STD. 9-68

SIGN POST BLOCKOUT

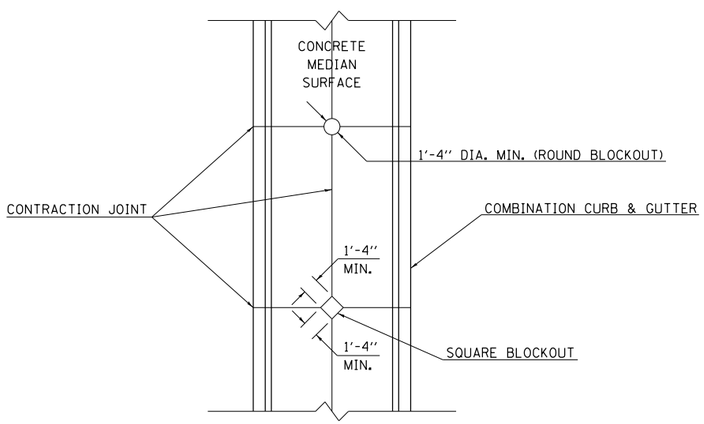

PLAN VIEW

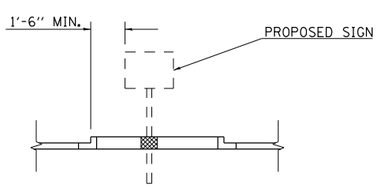

PROFILE VIEW

REVISIONS	
DRAWN	4-5-99
RESIZED	5-7-08

STD. 9-107

DETAIL OF DETECTOR LOOPS

NOTES

1. THE DETECTOR LOOPS SHALL BE TYPE I. EACH DETECTOR LOOP SHALL HAVE 3 TURNS OF LOOP WIRE AND BE INSTALLED IN ACCORDANCE WITH THE APPLICABLE PORTIONS OF SECTION 886 OF THE STANDARD SPECIFICATIONS FOR TRAFFIC CONTROL ITEMS.
2. BEGINNING LEAD WIRES SHALL BE CONNECTED TO THE BLACK LEAD AND THE ENDING LEAD WIRES SHALL BE CONNECTED TO THE WHITE LEAD OF THE TWIN TWISTED FEED CABLES AT THE SPLICE POINT.
3. WHERE THE LOOPS ARE INSTALLED PRIOR TO RESURFACING, THE LOOP CORNERS SHALL BE DIAGONALLY CUT.

LOOP LEGEND

(— CLOCKWISE ROTATION FOR LOOP WIRES

S — INDICATES SPLICE POINT FOR DETECTOR LOOP LEAD

● — INDICATES 2" CORE-DRILL

LOOP LAYOUT

ALL LOOPS ARE 6' x 20'

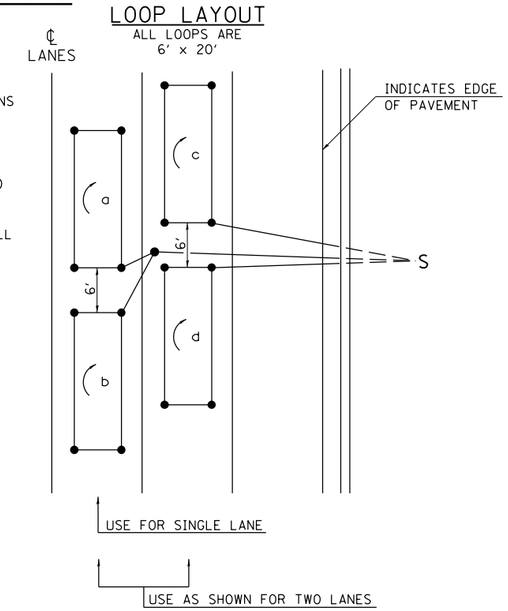

DETAIL 6' x 20' DETECTOR LOOPS

REVISIONS	
REDRAWN	5-13-02
REVISED	10-27-05
REVISED	3-26-08
REDRAWN	3-16-11
REVISED	4-12-13

STD. 9-92

FILE NAME = c:\pw_work\pwidot\lavenderba\d0363618\D78221-sht-details-dd-03.dgn	USER NAME = $USER$	DESIGNED - KN	REVISED -
		DRAWN - AS	REVISED -
	PLOT SCALE = 2.0000 ' / in.	CHECKED -	REVISED -
	PLOT DATE = 1/31/2014	DATE -	REVISED -

STATE OF ILLINOIS
DEPARTMENT OF TRANSPORTATION

DISTRICT DETAILS
9-59, 9-68, 9-107

SCALE: | SHEET NO. 3 OF 8 SHEETS | STA. | TO STA.

F.A.P. RTE.	SECTION	COUNTY	TOTAL SHEETS	SHEET NO.
331	(1-3)R-2, N-4, TS-4, HBK-1	WILLIAMSON	733	395
DRAWING NO. DD-03		CONTRACT NO. 78221		
		ILLINOIS FED. AID PROJECT		

RURAL SIDE APPROACH DETAILS

PRIVATE AND COMMERCIAL ENTRANCES

SIDEROADS

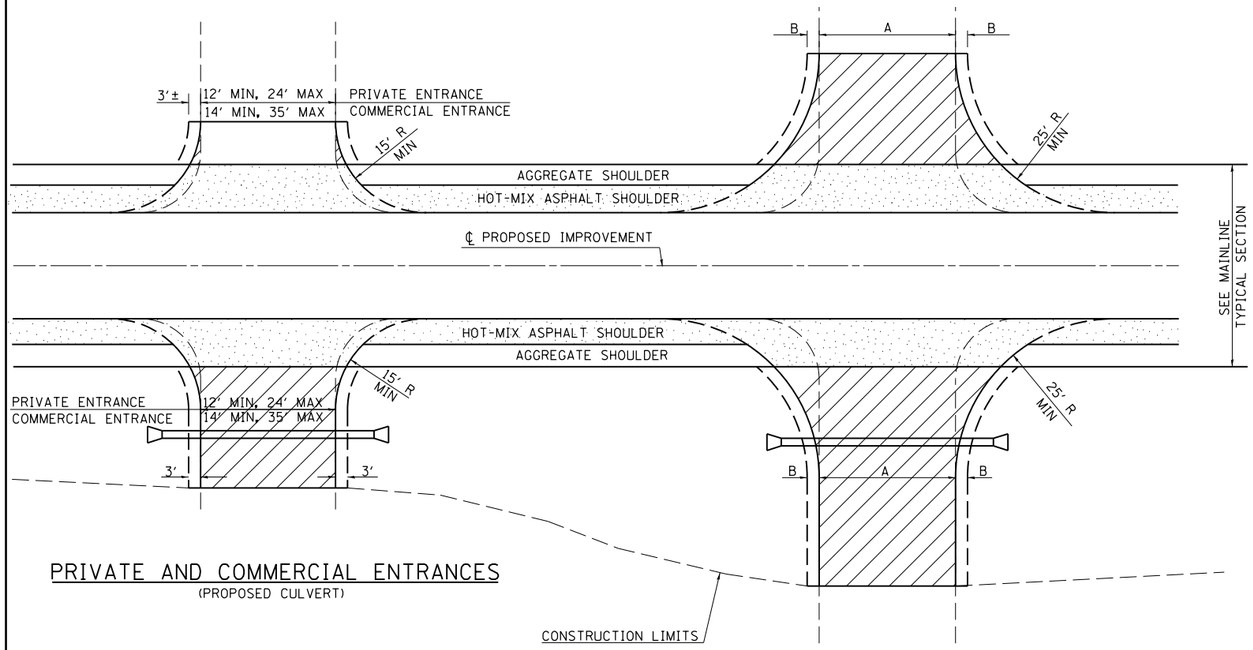

PRIVATE AND COMMERCIAL ENTRANCES
(PROPOSED CULVERT)

SIDEROADS
(PROPOSED CULVERT)

SIDEROAD DIMENSIONS (MIN.)

ADT	A (FT)	B (FT)
0 TO 250	18'	2'
250 TO 400	20'	2'
GREATER THAN 400	22'	4'

FIELD ENTRANCE TREATMENT

CONSTRUCT MAINLINE HOT-MIX ASPHALT AND AGGREGATE SHOULDERS THROUGH FIELD ENTRANCES.

IF A PIPE IS REQUIRED, PROVIDE A 22' WIDE EARTH EMBANKMENT WITH 15' RADII AT THE INTERSECTION.

WIDTH TRANSITION DETAIL TO EXISTING

(IF APPLICABLE)

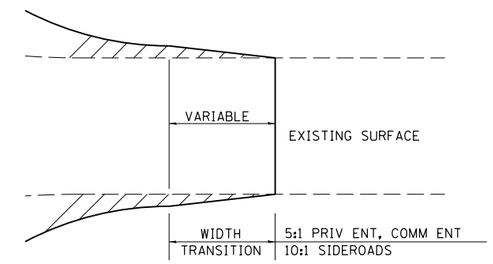

DETAIL FOR CALCULATING CULVERT LENGTH

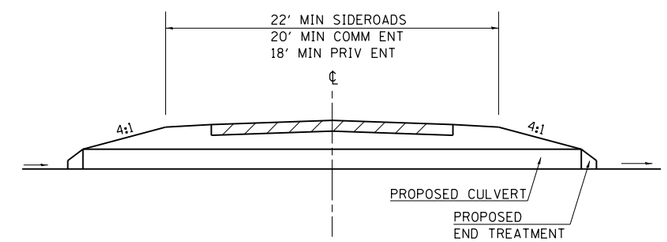

PRIVATE AND COMMERCIAL ENTRANCES

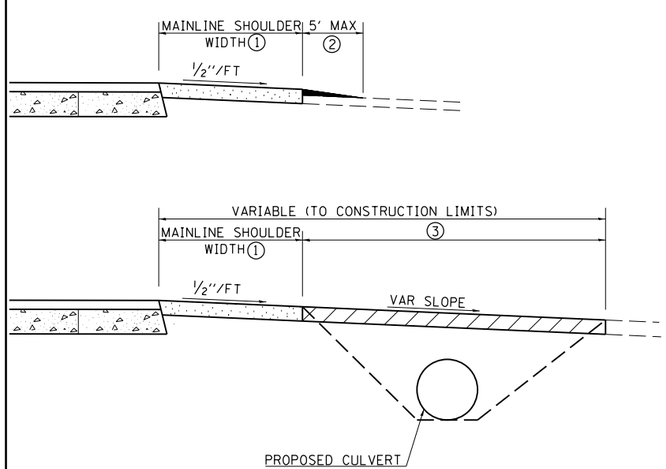

SIDEROADS

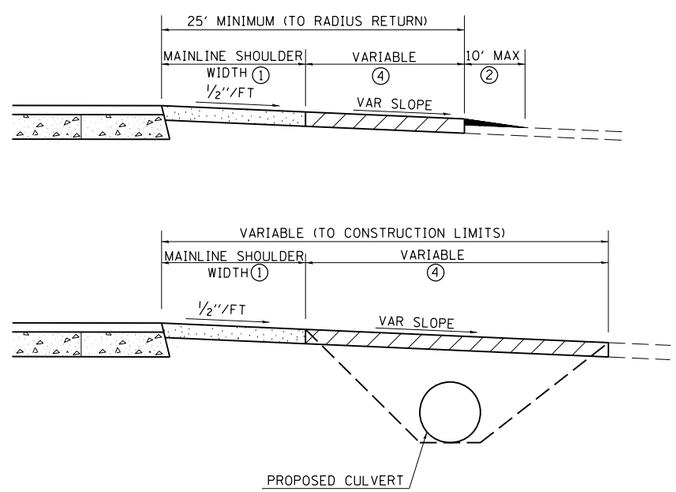

LEGEND

① CONSTRUCT HOT-MIX ASPHALT SHOULDER "FULL SHOULDER WIDTH" THROUGH ENTRANCE/INTERSECTION UNLESS OTHERWISE SHOWN ON THE PLANS OR AS DIRECTED BY THE ENGINEER.

② IF REQUIRED, AGGREGATE TAPER FOR EXISTING GRAVEL SURFACE; HOT-MIX ASPHALT TAPER FOR EXISTING HIGHER TYPE SURFACES.

③ 6" AGGREGATE SURFACE COURSE FOR EXISTING GRAVEL SURFACE; 2" HOT-MIX ASPHALT RESURFACING ON 4" AGGREGATE BASE COURSE FOR EXISTING HOT-MIX ASPHALT SURFACE; PCC DRIVEWAY PAVEMENT (6" - PE; 7" - CE) FOR EXISTING CONCRETE SURFACE.

④ 3" MINIMUM HOT-MIX ASPHALT RESURFACING ON 8" MINIMUM AGGREGATE BASE COURSE FOR EXISTING GRAVEL SURFACE OR OIL & CHIP SURFACE; MATCH EXISTING FOR EXISTING HIGHER TYPE SURFACES.

GENERAL NOTES

1. ENTRANCE LOCATIONS ARE TO COMPLY WITH IDOT'S POLICY "ACCESS TO STATE HIGHWAYS".
2. IN GENERAL, RELOCATED PRIVATE ENTRANCES ARE TO HAVE A 16' WIDE SURFACE WITH 3' WIDE SHOULDERS (22' WIDE EMBANKMENT).
3. SEE PLANS FOR PROPOSED PROFILE GRADES AT ENTRANCES/SIDEROADS. THE DESIRABLE MAXIMUM PROFILE GRADE FOR ENTRANCES ARE 12% FOR PE; 10% FOR CE.
4. ENTRANCE PIPE CULVERTS ARE TO BE A MINIMUM 15" DIAMETER AND NORMALLY REPLACED IN KIND; SIDEROAD PIPE CULVERTS ARE GENERALLY TO BE CONCRETE (18" MINIMUM DIAMETER).
5. THE INTERSECTION RADII OF SIDEROADS CONSTRUCTED TO FULL POLICY STANDARDS SHOULD COMPLY WITH THAT NOTED IN THE BUREAU OF LOCAL ROADS ADMINISTRATIVE POLICIES MANUAL (5-8-13).

STD. 9-83

REVISIONS	
DRAWN	3-15-91
REVISED	10-02-91
REVISED	5-15-92
REVISED	1-20-00
REVISED	01-11-07
RESIZED	5-7-08
REVIEWED	5-17-13

FILE NAME = c:\pw_work\pwidot\lavenderba\d0363618\D478221-sht-details-dd-04.dgn	USER NAME = $USER$	DESIGNED - KN	REVISED -
		DRAWN - AS	REVISED -
	PLOT SCALE = 2.0000 ' / in.	CHECKED -	REVISED -
	PLOT DATE = 1/31/2014	DATE -	REVISED -

STATE OF ILLINOIS
DEPARTMENT OF TRANSPORTATION

DISTRICT DETAILS
9-83

SCALE: | SHEET NO. 4 OF 8 SHEETS | STA. | TO STA.

F.A.P. RTE.	SECTION	COUNTY	TOTAL SHEETS	SHEET NO.
331	(1-3)R-2, N-4, TS-4, HBK-1	WILLIAMSON	733	396

DRAWING NO. DD-04 | CONTRACT NO. 78221

ILLINOIS FED. AID PROJECT

URBAN SIDEROAD & ENTRANCE DETAILS

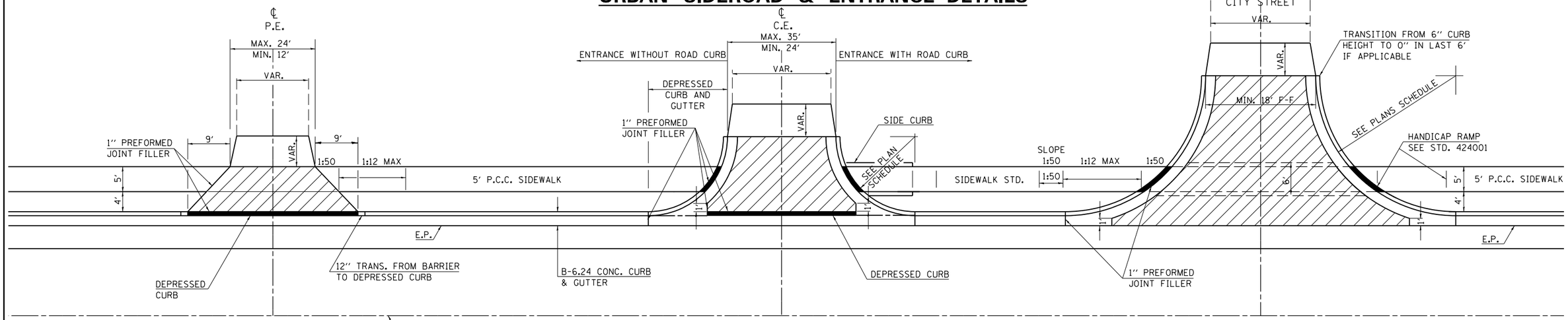

DETAILS PRIVATE ENTRANCE

DETAILS COMMERCIAL ENTRANCE

DETAILS CITY STREETS

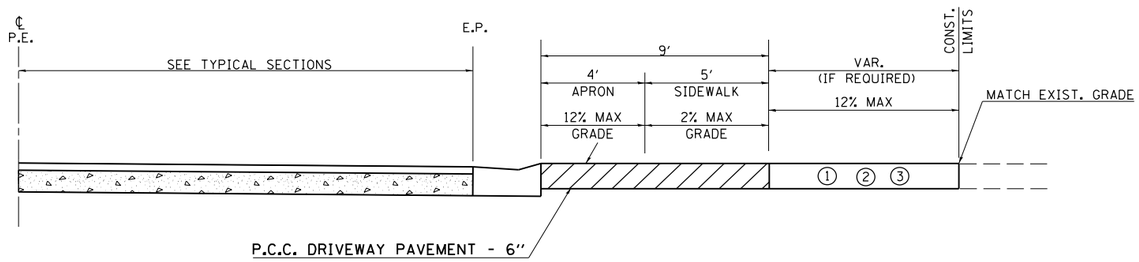

PROFILE OF PRIVATE ENTRANCES

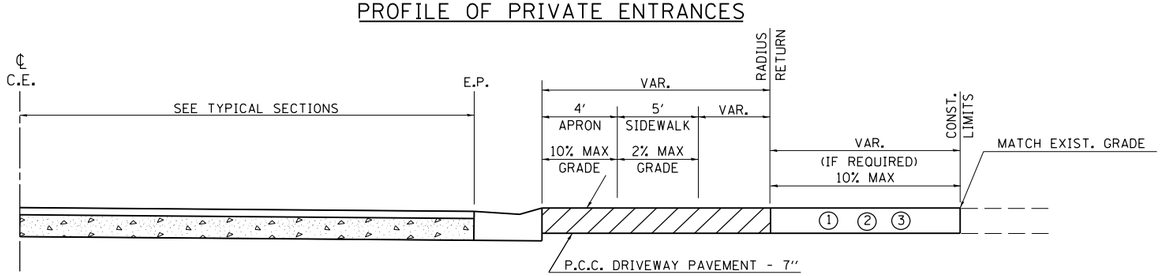

PROFILE OF COMMERCIAL ENTRANCES

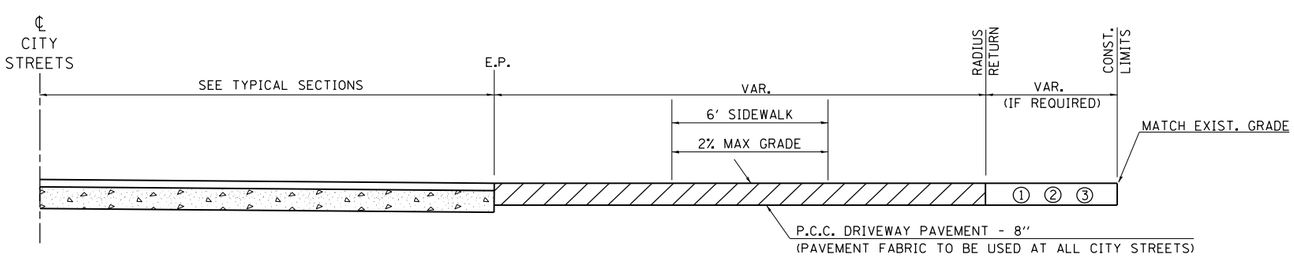

PROFILE OF CITY STREETS

GENERAL NOTES

1. SEE PLAN SCHEDULES FOR DIMENSIONS AND QUANTITIES.
2. SEE CROSS SECTIONS FOR PROPOSED PROFILE OF SIDEROAD AND ENTRANCES.
3. IN GENERAL, WIDTH TRANSITION TAPER RATES ARE TO BE 5:1 FOR ENTRANCES, AND 10:1 FOR CITY STREETS.
4. THE SAWING OF ALL JOINTS IN PCC DRIVEWAY PAVEMENT AT ALL LOCATIONS DESIGNATED BY THE ENGINEER, SHALL BE CONSIDERED INCIDENTAL TO THE COST OF THE PCC DRIVEWAY PAVEMENT.

LEGEND

① EXISTING AGGREGATE SURFACE:
CONSTRUCT AGGREGATE SURFACE CSE, TYPE A WEDGE TO MATCH EXISTING GRADE. USE 6″ MIN. (8″ MIN. FOR CITY STREETS) THICKNESS FOR ANY REQUIRED WIDENING.

② EXISTING BITUMINOUS SURFACE:
USE 2″ MIN. BITUMINOUS RESURFACING ON 4″ MIN. (6″ MIN. FOR CITY STREETS) AGGREGATE BASE COURSE.

③ EXISTING CONCRETE SURFACE:
P.C.C. DRIVEWAY PAVEMENT 6″ P.E.'S
P.C.C. DRIVEWAY PAVEMENT 7″ C.E.'S
P.C.C. DRIVEWAY PAVEMENT 8″ CITY STREETS

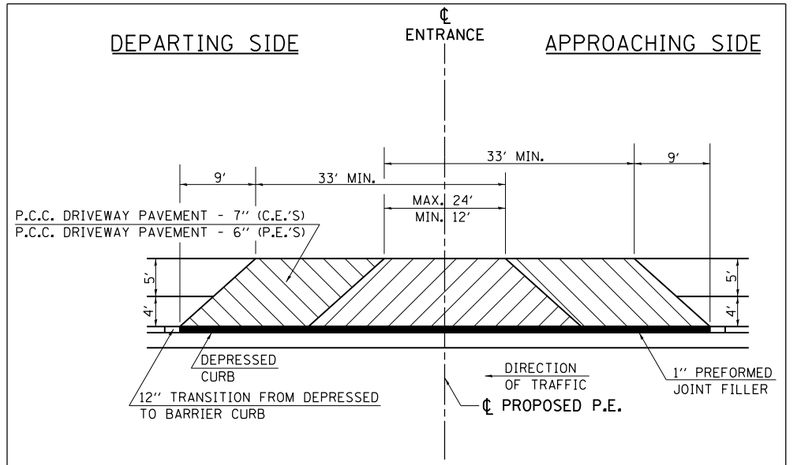

DETAILS FOR CONST. MAILBOX TURNOUTS

(AT EITHER APPROACHING OR DEPARTING SIDE OF ENTRANCE)

STD. 9-84

REVISIONS	
DRAWN	10-22-90
REVISED	9-6-91
REVISED	10-21-91
RESIZED	5-8-08
REVISED	03-26-13

FILE NAME = c:\pw_work\pwidot\lavenderba\d0363618\D78221-sht-details-dd-05.dgn	USER NAME = $USER$	DESIGNED - KN	REVISED -
		DRAWN - AS	REVISED -
	PLOT SCALE = 2.0000 ' / in.	CHECKED -	REVISED -
	PLOT DATE = 1/31/2014	DATE -	REVISED -

STATE OF ILLINOIS
DEPARTMENT OF TRANSPORTATION

DISTRICT DETAILS
9-84

SCALE: | SHEET NO. 5 OF 8 SHEETS | STA. | TO STA.

F.A.P. RTE.	SECTION	COUNTY	TOTAL SHEETS	SHEET NO.
331	(1-3)R-2, N-4, TS-4, HBK-1	WILLIAMSON	733	397
DRAWING NO. DD-05		CONTRACT NO. 78221		
		ILLINOIS FED. AID PROJECT		

TYPICAL DETAIL OF STONE RIPRAP DITCH LINING

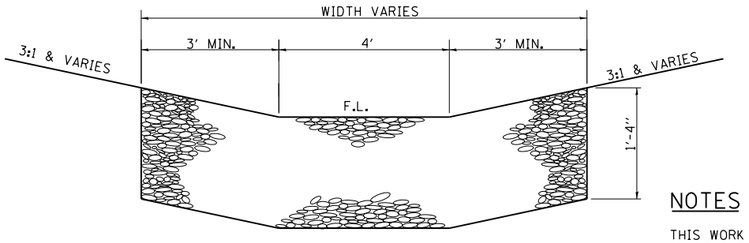

NOTES

THIS WORK INCLUDES THE EARTH EXCAVATION REQUIRED TO PLACE THE RIPRAP AS SHOWN. THE MATERIAL RESULTING FROM THE EARTH EXCAVATION SHALL BE PLACED IN THE ROADWAY EMBANKMENT, OR WASTED AS DIRECTED BY THE ENGINEER. THE EARTHWORK SHALL BE CONSIDERED INCLUDED IN THE COST OF THE DITCH CHECKS.

THE RIPRAP DITCH SHALL BE CONSTRUCTED AT THE LOCATIONS SHOWN IN THE PLANS OR AS DIRECTED BY THE ENGINEER. CONSTRUCTION OF THE STONE RIPRAP DITCH SHAL CONFORM TO THE REQUIREMENTS FOR CLASS A4 RIPRAP AS INDICATED IN SECTION 281 OF STANDARD SPECIFICATIONS.

THIS WORK SHALL BE PAID FOR AT THE CONTRACT UNIT PRICE PER SQ YD FOR **STONE RIPRAP, CLASS A4,** WHICH PRICE SHALL INCLUDE ALL MATERIAL, LABOR AND EQUIPMENT TO COMPLETE THE WORK IN PLACE AS SHOWN.

BEDDING MATERIAL AND FILTER FABRIC AS SPECIFIED IN SECTION 281 OF THE STANDARD SPECIFICATIONS WILL NOT BE REQUIRED.

CONCRETE COLLAR

PIPE TO PIPE

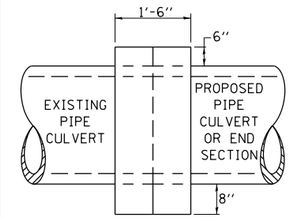

SIDE VIEW

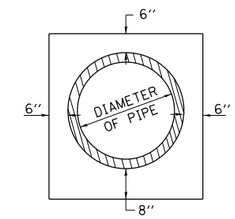

END VIEW

TABULATION

DIAMETER OF PIPE	CL SI CONC CU YDS EST
12"	0.24
15"	0.29
18"	0.32
24"	0.44
30"	0.56
36"	0.66
42"	0.80
48"	0.93
54"	1.07
60"	1.22
72"	1.55

THE CONCRETE COLLAR SHALL BE PAID FOR AT THE CONTRACT UNIT PRICE PER CUBIC YARD FOR **CONCRETE COLLAR,** AS SHOWN ON THE PLANS, WHICH PRICE SHALL INCLUDE THE REMOVAL OF SUCH PORTIONS THE EXISTING HEADWALLS AS MAY BE REQUIRED.

CLASS SI CONCRETE SHALL BE USED THROUGHOUT.

REVISIONS

DRAWN	7-13-90
REVISED	8-22-94
REVISED	3-26-08
REVISED	5-17-13

STD. 9-79

TEMPORARY DITCH CHECKS

PLACEMENT OF TEMPORARY DITCH CHECK IN DRAINAGE WAY

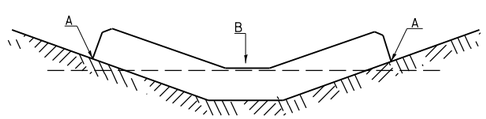

POINTS A SHOULD BE HIGHER THAN POINT B

SPACING BETWEEN TEMPORARY DITCH CHECKS

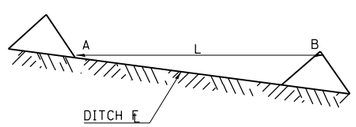

L = THE DISTANCE SUCH THAT POINTS A AND B ARE OF EQUAL ELEVATION

B = THE LOW POINT IN CENTER OF CHECK

REVISIONS

DRAWN	9-01-99
REVISED	10-3-01
RESIZED	5-8-08
REVISED	05-04-10
REVIEWED	5-17-13

STD. 9-108

PAYMENT LIMITS FOR PRECAST CONCRETE BOX CULVERTS

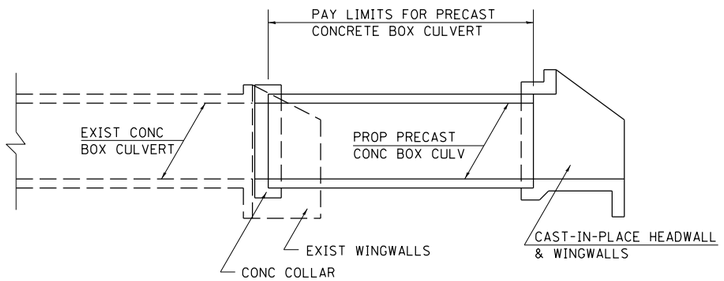

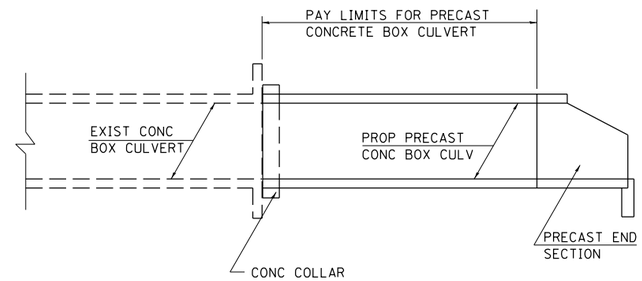

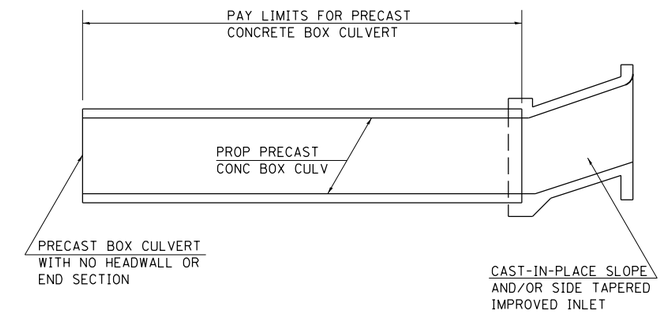

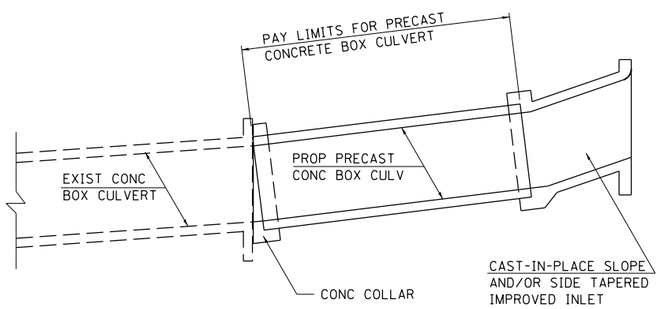

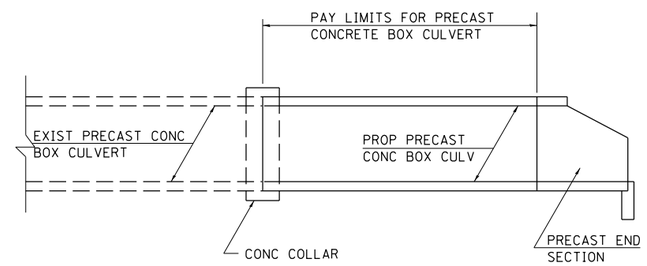

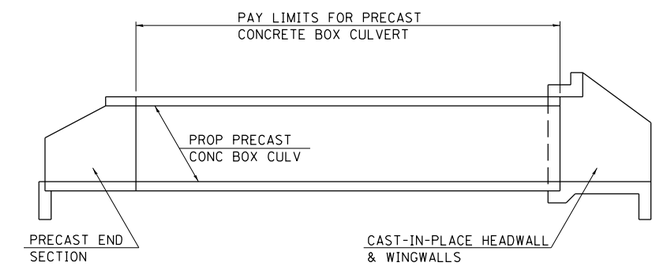

CULVERT EXTENSIONS

NEW CULVERTS

NOTES:

WHEN PRECAST CONCRETE BOX CULVERTS ARE SPECIFIED ON THE PLANS, THEY WILL BE MEASURED BY THE FOOT. THE OVERALL LENGTH SHALL BE MEASURED OUT-TO-OUT OF THE PRECAST SEGMENTS ALONG THE CENTERLINE OF THE CULVERT. THE BOX CULVERT END SECTIONS WILL BE MEASURED AS EACH. CAST-IN-PLACE COLLARS WILL NOT BE PAID FOR SEPERATELY, BUT SHALL BE INCLUDED IN THE COST OF THE PRECAST CONCRETE BOX CULVERT. SEE ARTICLE 540.08 OF THE STANDARD SPECIFICATIONS ADOPTED JANUARY 1, 2002.

THE TERM "BOX CULVERT END SECTION" AS USED HEREIN SHALL BE DEFINED AS EITHER PRECAST END SECTIONS OR CAST-IN-PLACE HEADWALLS AND WINGWALLS CONSTRUCTED AS SHOWN IN THE PLANS.

THROUGHOUT THESE PLANS, QUANTITIES SHOWN FOR CLASS SI CONCRETE AND REBARS TO BE USED IN COLLARS, HEADWALLS, WINGWALLS OR IMPROVED INLETS FOR PRECAST CONCRETE BOX CULVERTS ARE PROVIDED FOR INFORMATION AND BIDDING ONLY, AND SHALL NOT BE PAID FOR SEPERATELY.

REVISIONS

DRAWN	8-14-90	REVISED	8-16-94
REVISED	7-19-91	RESIZED	5-6-08
REVISED	3-11-92		
REVISED	12-9-92		

STD. 9-81

FILE NAME = c:\pw_work\pwidot\lavenderba\d0363618\D978221-sht-details-dd-08.dgn	USER NAME = $USER$	DESIGNED - KN	REVISED -
		DRAWN - AS	REVISED -
	PLOT SCALE = 2.0000 ' / in.	CHECKED -	REVISED -
	PLOT DATE = 1/31/2014	DATE -	REVISED -

STATE OF ILLINOIS
DEPARTMENT OF TRANSPORTATION

DISTRICT DETAILS
9-81

SCALE: | SHEET NO. 8 OF 8 SHEETS | STA. | TO STA.

F.A.P. RTE.	SECTION	COUNTY	TOTAL SHEETS	SHEET NO.
331	(1-3)R-2, N-4, TS-4, HBK-1	WILLIAMSON	733	400
DRAWING NO.	DD-08	CONTRACT NO. 78221		
		ILLINOIS FED. AID PROJECT		