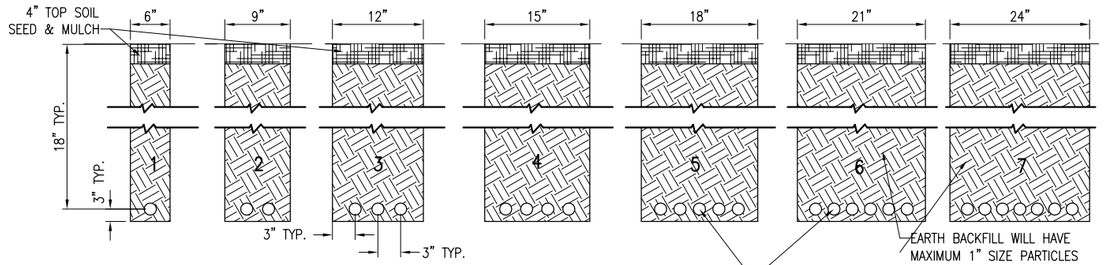

NOTES:
DETAIL NUMBERS INDICATE NO. OF CABLES.

TRENCHES WITH MORE THAN SEVEN CABLES SHALL BE INCREASED 3" IN WIDTH FOR EACH ADDITIONAL CABLE; IF SPECIFIED ON PLANS TWO PARALLEL TRENCHES MAY BE CONSTRUCTED.

DEPTH OF TRENCHES SHALL BE AS SHOWN ABOVE UNLESS OTHERWISE SPECIFIED ON THE PLANS.

ALL DISTURBED SURFACES SHALL BE RESTORED TO THEIR ORIGINAL CONDITION. COST IS INCIDENTAL TO TRENCH.

CABLE TRENCHES
(NOT TO SCALE)

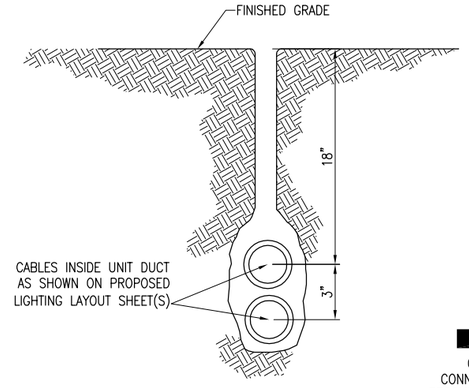

PLOWED CABLE
(NOT TO SCALE)

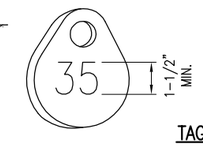

NOTE:
AFFIX NON-CORROSIVE TAG TO FIXTURE FACING RUNWAY WITH SET SCREW, WIRE TIE, OR METAL BAND. NUMERALS SHALL BE ENGRAVED FOR PERMANENT READABILITY.

TAG DETAIL
(NOT TO SCALE)

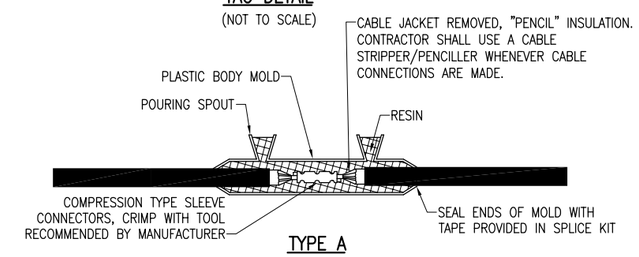

TYPE A
FOR SPLICES IN LOW VOLTAGE CABLE (600V) HOMERUNS FOR EXTENSIONS TO EXISTING LOW VOLTAGE CABLES ONLY. TYPE A SPLICES SHALL BE MADE IN SPLICE CANS, HANDHOLES, MANHOLES, OR JUNCTIONS BOXES

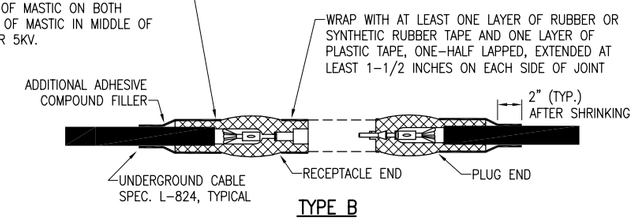

TYPE B
FOR SPLICES AT JUNCTION OF HOMERUN WITH LOOP CIRCUIT AND FOR SPLICES IN HOMERUNS TO EXISTING CABLES

PER FAA AC 150/5340-30G DESIGN AND INSTALLATION DETAILS FOR AIRPORT VISUAL AIDS, A LIGHT BASE GROUND MUST BE INSTALLED AT EACH LIGHT FIXTURE. A LIGHT BASE GROUND SHALL BE INSTALLED AT EACH STAKE MOUNTED LIGHT AND EACH TRANSFORMER BASE/LIGHT CAN ASSOCIATED WITH RUNWAY LIGHTS, TAXIWAY LIGHTS, AND LIGHTED TAXI GUIDANCE SIGNS. THE LIGHT BASE GROUND SHALL BE A #6 AWG BARE COPPER CONDUCTOR BONDED TO THE GROUND LUG ON THE RESPECTIVE L-867 TRANSFORMER BASE/LIGHT CAN OR MOUNTING STAKE AND A 3/4-INCH DIAMETER BY 10-FOOT LONG (MINIMUM) UL LISTED COPPER CLAD GROUND ROD.

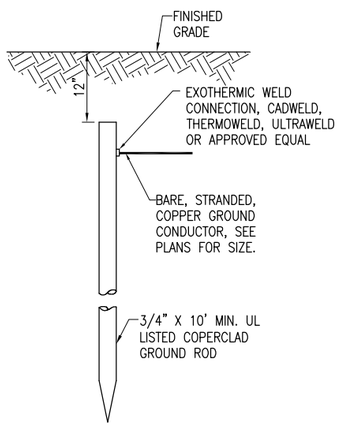

NOTES:
TYPE AND MINIMUM NUMBER OF GROUND RODS SHALL BE AS SPECIFIED ON THE PLAN.

THE RESISTANCE TO GROUND OF THE GROUNDING SYSTEM SHALL NOT EXCEED 25 OHMS.

COST OF GROUND RODS IS INCIDENTAL TO THE ASSOCIATED ITEMS REQUIRING GROUNDING UNLESS OTHERWISE SPECIFIED.

GROUND ROD
(NOT TO SCALE)

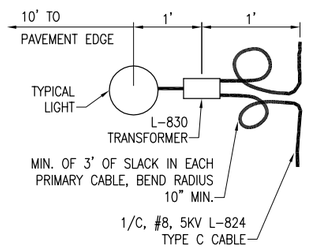

PLAN VIEW

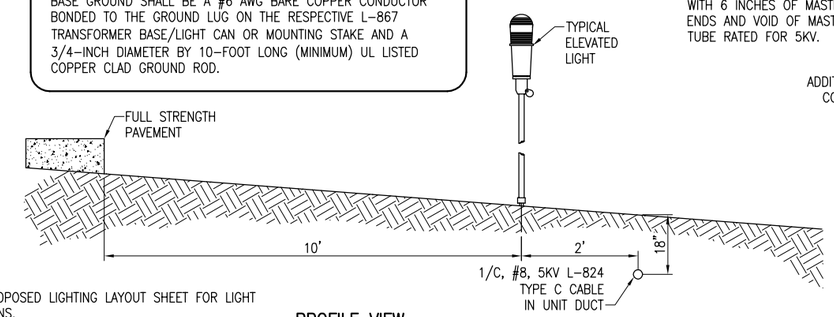

NOTES:
SEE PROPOSED LIGHTING LAYOUT SHEET FOR LIGHT LOCATIONS.

PROFILE VIEW

LIGHT AND CABLE INSTALLATION DETAIL
(NOT TO SCALE)

SEE "ELECTRICAL DETAILS SHEET 2" FOR BASE MOUNT LIGHT DETAILS

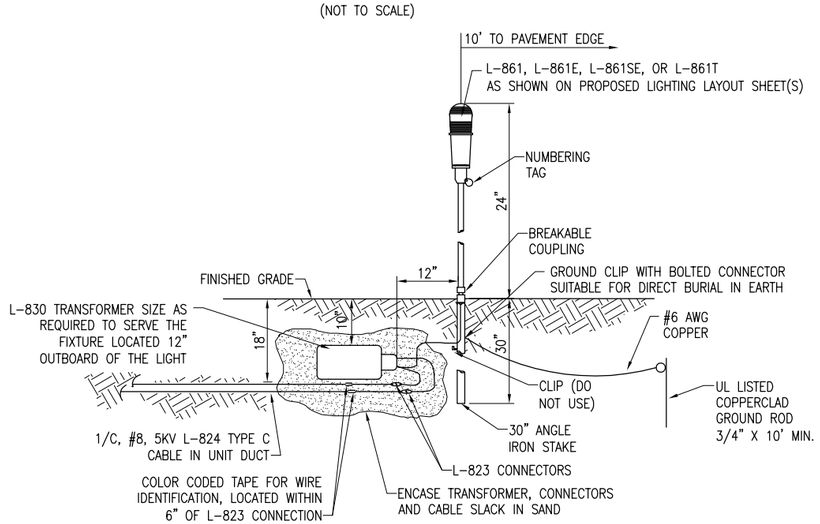

MEDIUM INTENSITY LIGHT – STAKE MOUNTED
(NOT TO SCALE)

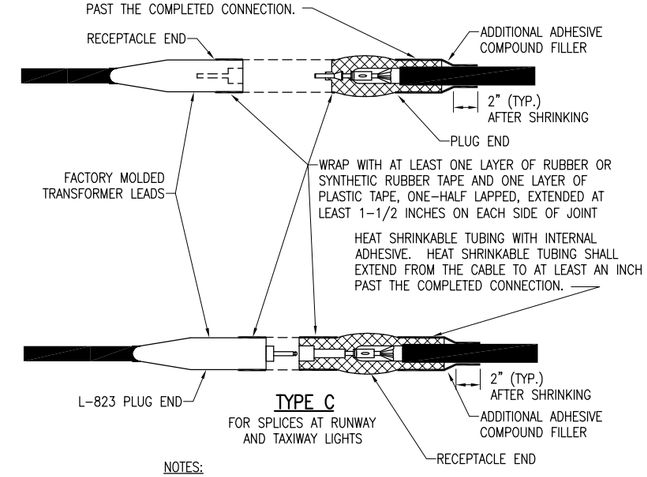

TYPE C
FOR SPLICES AT RUNWAY AND TAXIWAY LIGHTS

NOTES:
SEE PROPOSED LIGHTING LAYOUT SHEET(S) FOR SPLICE TYPE.

INSIDE DIAMETER OF CONNECTOR SHALL PROPERLY MATCH THE OUTSIDE DIAMETER OF CABLE.

CABLE SPLICES
(NOT TO SCALE)

HANSON
Engineering | Planning | Allied Services

Offices Nationwide
www.hanson-inc.com

Hanson Professional Services Inc.
3125 New Era Road
Murphysboro, IL 62966
phone: 618-549-0240
fax: 618-549-0242

Illinois Licensed
Professional Service Corporation
#184-001084

SOUTHERN ILLINOIS AIRPORT

MURPHYSBORO / CARBONDALE, ILLINOIS

REMOVE TAXIWAY D

IDA No: MDH-4304

Contract No:

SBG No: SBG-TBD

NO.	DATE	DESCRIPTION		
		LAY	DWN	REV

ISSUE: MARCH 07, 2014
PROJECT NO: 13A0083D
CAD FILE: E-501-DETL.DWG
LAYOUT BY: KNL 02/25/2014
DRAWN BY: CWS 02/25/2014
REVIEWED BY: JSL 03/05/2014

© Copyright Hanson Professional Services Inc. 2014

SHEET TITLE

ELECTRICAL DETAILS SHEET 1

MAR 05, 2014 3:09 PM SCHUB01446