04-25-2025 LETTING ITEM 01X - FOR REVIEW & INSPECTION ONLY

F.A.P. RTE.	SECTION	COUNTY	TOTAL SHEETS	SHEET NO.
317	(15B-1)BP,BRR;(14HB-1)BRR	PEORIA TAZEWELL	418*	1
		ILLINOIS	CONTRACT NO. 68E44	

* 418 + 2 = 420 TOTAL SHEETS

FOR INDEX OF SHEETS, SEE SHEET NO. 3.

STATE OF ILLINOIS
DEPARTMENT OF TRANSPORTATION

PROPOSED HIGHWAY PLANS

FAP 317 (U.S. ROUTE 150)
SECTION (15B–1)BP,BRR;(14HB–1)BRR
PROJECT NHPP–ST9M(831)
BRIDGE REPAIR
PEORIA / TAZEWELL COUNTY

C–94–079–18

D–94–057–18

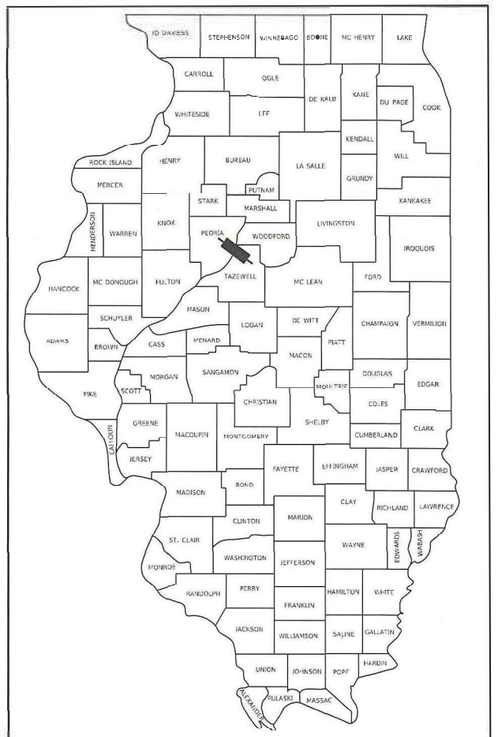

LOCATION OF SECTION INDICATED THUS:–

PREPARED BY:

MODJESKI and MASTERS
1254 UNIVERSITY DRIVE, SUITE 302
EDWARDSVILLE, IL 62025
PHONE (618) 659-9102
PROJECT MANAGER:
RACHEL L. MERTZ, P.E., S.E.
WWW.MODJESKI.COM

HANSON
Hanson Professional Services Inc.
7625 N. UNIVERSITY ST., SUITE 200
PEORIA, IL 61614
PHONE (309) 713-1402
PROJECT MANAGER:
CINDY LOOS, P.E.
WWW.HANSON-INC.COM

LIN ENGINEERING, LTD.
Consulting Engineers
Westmont, Illinois
576 OAKMONT LANE
WESTMONT, IL 60559
PHONE (773) 351-2181
PROJECT MANAGER:
SHIRAZ TARIQUE, P.E.
WWW.LINENG.COM

FUNCTIONAL CLASSIFICATION
OTHER PRINCIPAL ARTERIAL
AADT (2018) = 37,900
SU=1.60%, MU=0.70%

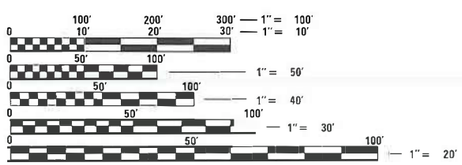

FULL SIZE PLANS HAVE BEEN PREPARED USING STANDARD ENGINEERING SCALES. REDUCED SIZED PLANS WILL NOT CONFORM TO STANDARD SCALES. IN MAKING MEASUREMENTS ON REDUCED PLANS, THE ABOVE SCALES MAY BE USED.

J.U.L.I.E.
JOINT UTILITY LOCATION INFORMATION FOR EXCAVATORS
1–800–892–0123
OR 811

PROJECT ENGINEER: DAVID BROVIAK (309) 671-3493
PROJECT MANAGER: KEVIN HORST (309) 671-3472
CATALOG NO. 035634-00D
CONTRACT NO. 68E44

BRIDGE
S.N. 072–0168

RANGE 8E / 4W

BRIDGE
S.N. 090–0115

BEGIN CONSTRUCTION

IMPROVEMENT BEGINS
STA. 711+69.04

IMPROVEMENT ENDS
STA. 256+12.35

END CONSTRUCTION

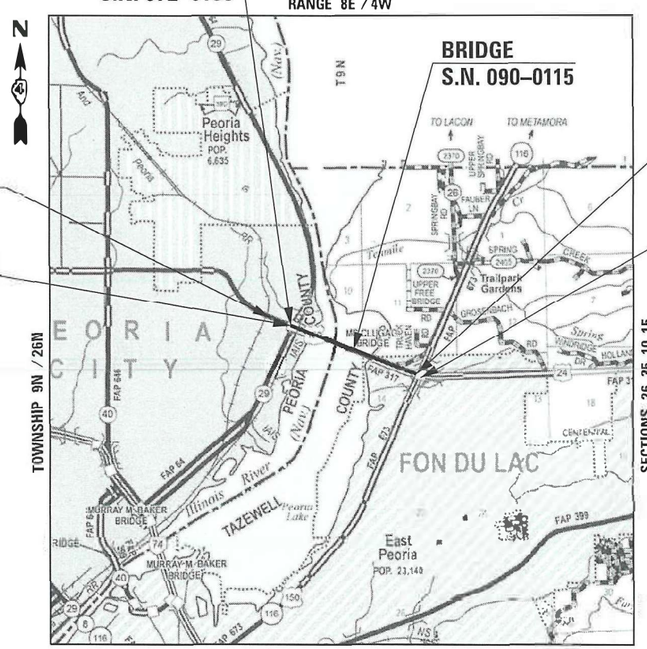

GROSS LENGTH = 6,809.61 FT. = 1.29 MILE
NET LENGTH = 6,809.61 FT. = 1.29 MILE

PROJECT DESCRIPTION:

THE REHABILITATION OF S.N. 072–0168 INCLUDES DECK REPLACEMENT, CLEANING AND PAINTING STEEL, CONVERTING ABUTMENTS TO SEMI–INTEGRAL, AND ROADWAY LIGHTING REPLACEMENT.

THE REHABILITATION OF S.N. 090–0115 INCLUDES DECK REPLACEMENT, SUPERSTRUCTURE REPAIRS, CLEANING AND PAINTING STEEL, BEARING REPLACEMENT, SUBSTRUCTURE REPAIRS, SCOUR MITIGATION, AND ROADWAY AND NAVIGATION LIGHTING REPLACEMENT.

STATE OF ILLINOIS
DEPARTMENT OF TRANSPORTATION

SUBMITTED Mar 19 20 25
Kenneth A Barnett KSD
REGIONAL ENGINEER

March 21 20 25
ENGINEER OF DESIGN AND ENVIRONMENT

March 21 20 25
DIRECTOR OF HIGHWAYS PROJECT IMPLEMENTATION

PRINTED BY THE AUTHORITY OF THE STATE OF ILLINOIS

REV. 3/31/25

RACHEL L. MERTZ
062-056721
LICENSED
PROFESSIONAL
ENGINEER
STATE OF ILLINOIS

RACHEL L. MERTZ, P.E.

SHEETS: 1–20, 90–112, 114–121, and 385–389

DATE SIGNED 1/17/2025

LICENSE EXP DATE 11/30/2025

MODJESKI and MASTERS

MATTHEW G. DAWSON
062-057939
LICENSED
PROFESSIONAL
ENGINEER
STATE OF ILLINOIS

MATTHEW G. DAWSON, P.E.

SHEETS: 21, 24–26, 35–42, 87–89, 113, and 398–409

DATE SIGNED 1/17/2025

LICENSE EXP DATE 11/30/2025

HANSON
Hanson Professional Services Inc.

SHIRAZ TARIQUE
062-064219
LICENSED
PROFESSIONAL
ENGINEER
STATE OF ILLINOIS

SHIRAZ TARIQUE, P.E.

SHEETS: 22–23, 27–34, 43–86, 390–397, and 410–418

DATE SIGNED 1/17/25

LICENSE EXP DATE 11/30/2025

LIN ENGINEERING, LTD.
Consulting Engineers
Westmont, Illinois

ILLINOIS DEPARTMENT OF TRANSPORTATION
RESPONSIBLE FOR THE DESIGN
AND SHEET DEVELOPMENT OF THE
ELECTRICAL PLANS.

SHEETS: 122–138

Illinois Department
of Transportation

RACHEL L. MERTZ
081-006526
LICENSED
STRUCTURAL
ENGINEER
STATE OF ILLINOIS

RACHEL L. MERTZ, S.E.

SHEETS: 139–389

DATE SIGNED 1/17/2025

LICENSE EXP DATE 11/30/2026

MODJESKI and MASTERS

INDEX OF SHEETS

HIGHWAY STANDARDS

000001-08	STANDARD SYMBOLS, ABBREVIATIONS, AND PATTERNS
001001-02	AREAS OF REINFORCEMENT BARS
001006	DECIMAL OF AN INCH AND OF A FOOT
280001-07	TEMPORARY EROSION CONTROL SYSTEMS
420001-10	PAVEMENT JOINTS
420101-07	24' (7.2 M) JOINTED PCC PAVEMENT
420401-13	PAVEMENT CONNECTOR (PCC) FOR BRIDGE APPROACH SLAB
482001-02	HMA SHOULDER ADJACENT TO FLEXIBLE PAVEMENT
482006-03	HMA SHOULDER ADJACENT TO RIGID PAVEMENT
483001-06	PCC SHOULDER
601101-02	CONCRETE HEADWALL FOR PIPE UNDERDRAINS
602301-04	INLET - TYPE A
602306-03	INLET - TYPE B
602401-07	PRECAST MANHOLE TYPE A 4' (1.22M) DIAMETER
602701-02	MANHOLE STEPS
604001-05	FRAME AND LIDS TYPE 1
604071-07	FRAME AND GRATE TYPE 20
606001-08	CONCRETE CURB TYPE B AND COMBINATION CONCRETE CURB AND GUTTER
606401-02	PAVED DITCH
630001-13	STEEL PLATE BEAM GUARDRAIL
630301-09	SHOULDER WIDENING FOR TYPE 1 (SPECIAL) GUARDRAIL TERMINALS
631031-18	TRAFFIC BARRIER TERMINAL, TYPE 6
635001-02	DELINEATORS
701101-05	OFF-RD OPERATIONS, MULTILANE, 15' (4.5M) TO 24" (600MM) FROM PAVEMENT EDGE
701106-02	OFF-RD OPERATIONS, MULTILANE, MORE THAN 15' (4.5M) AWAY
701411-09	LANE CLOSURE, MULTILANE, AT ENTRANCE OR EXIT RAMP, FOR SPEEDS ≥ 45 MPH
701421-08	LANE CLOSURE, MULTILANE, DAY OPERATIONS ONLY, FOR SPEEDS ≥ 45 MPH TO 55 MPH
701422-10	LANE CLOSURE, MULTILANE, FOR SPEEDS ≥ 45 MPH TO 55 MPH
701426-09	LANE CLOSURE, MULTILANE, INTERMITTENT OR MOVING OPER., FOR SPEEDS ≥ 45 MPH
701427-05	LANE CLOSURE, MULTILANE, INTERMITTENT OR MOVING OPER., FOR SPEEDS ≤ 40 MPH
701428-01	TRAFFIC CONTROL SETUP AND REMOVAL FREEWAY/EXPRESSWAY
701456-05	PARTIAL EXIT RAMP CLOSURE, FREEWAY/EXPRESSWAY
701601-09	URBAN LANE CLOSURE, MULTILANE, 1W OR 2W WITH NONTRAVERSABLE MEDIAN
701901-10	TRAFFIC CONTROL DEVICES
704001-08	TEMPORARY CONCRETE BARRIER
720001-01	SIGN PANEL MOUNTING DETAILS
720006-04	SIGN PANEL ERECTION DETAILS
720011-01	METAL POSTS FOR SIGNS, MARKERS AND DELINEATORS
725001-01	OBJECT AND TERMINALS MARKERS
729001-01	APPLICATIONS OF TYPES A AND B METAL POSTS (FOR SIGNS & MARKERS)
780001-05	TYPICAL PAVEMENT MARKINGS
781001-04	TYPICAL APPLICATIONS RAISED REFLECTIVE PAVEMENT MARKERS
782006-01	GUARDRAIL AND BARRIER WALL REFLECTOR MOUNTING DETAILS
812001-01	RACEWAYS EMBEDDED IN STRUCTURE
821101-03	LUMINAIRE WIRING IN POLE
830011-03	LIGHT POLE STEEL MAST ARM
836001-05	LIGHT POLE FOUNDATION
838001-01	BREAKAWAY DEVICES

DISTRICT 4 STANDARDS

205001-D4	SLOPE STEPS DETAIL
406101-D4	BUTT JOINT
604201-04	FRAME & GRATE ADJUSTING RING
630101-D4	GUARDRAIL EROSION CONTROL TREATMENTS
780001-D4	TYPICAL PAVEMENT MARKINGS

Illinois Department of Transportation

Status of Utilities

Name of Utility Company: Windstream

Route: FAP 317 (US 150)
Section: (15B-1)BP,BRR;(14HB-1)BRR
County: Peoria / Tazewell
Contract No.: 68E44
Job No.: C- 94- 07981

Route	Offset	Location	Type of Utility	Type of Conflict	Disposition
US 150 WB	Lt 13' to 20'	2102+75 to 2106+72	Fiber Optic	New crossover	Relocate
US 150 WB Structure			Conduit w/fiber optic	Sand blasting & painting	Caution

NOTE: Please check all your facilities within the construction limits of this project.

Illinois Department of Transportation

Status of Utilities

Name of Utility Company: Comcast

Route: FAP 317 (US 150)
Section: (15B-1)BP,BRR;(14HB-1)BRR
County: Peoria / Tazewell
Contract No.: 68E44
Job No.: C- 94- 079- 18

Route	Offset	Location	Type of Utility	Type of Conflict	Disposition
US 150 WB Structure		In Windstream Conduit attached to structure	Conduit w/fiber optic	Sand blasting & painting	Caution

NOTE: Please check all your facilities within the construction limits of this project.

Printed 2/13/2025 D4 PD0100 (Rev. 02/24/10)

Illinois Department of Transportation

Status of Utilities

Name of Utility Company: Ilinois American water

Route: FAP 317 (US 150)
Section: (15B-1)BP,BRR;(14HB-1)BRR
County: Peoria / Tazewell
Contract No.: 68E44
Job No.: C- 94- 079- 18

Route	Offset	Location	Type of Utility	Type of Conflict	Disposition
US 150 WB	Easement to ROW	Sta. 200+60 200+75	Watermain	Heavy Equipment - Contractor to coordinate with IAW	Caution
US 150 WB	Easement to ROW	Sta. 203+20 to 203+40	(2) Watermains	Heavy Equipment - Contractor to coordinate with IAW	Caution

NOTE: Please check all your facilities within the construction limits of this project.

Printed 2/13/2025 D4 PD0100 (Rev. 02/24/10)

MODEL: Default
FILE NAME: P:\4312 WBMcCluggageRehab\CADD\Structural_Front Sheets - Cover, SOQ, etc\D468E44-sht-index.dgn

MODJESKI and MASTERS

USER NAME = AECook	DESIGNED - RLM	REVISED -	
	DRAWN - AEC	REVISED -	
PLOT SCALE = 2:0.0000 ':" / in.	CHECKED - RLM	REVISED -	
PLOT DATE = 3/14/2025	DATE - 1/ 17/ 2025	REVISED -	

STATE OF ILLINOIS
DEPARTMENT OF TRANSPORTATION

US 150 WESTBOUND McCLUGAGE BRIDGE PROJECT
INDEX OF SHEETS, STANDARDS AND STATUS OF UTILITIES

SCALE: N.T.S. | SHEET 1 OF 1 SHEETS | STA. TO STA.

F.A.P. RTE.	SECTION	COUNTY	TOTAL SHEETS	SHEET NO.
317	(15B-1)BP,BRR; (14HB-1)BRR	PEO/TAZ	418	3
		CONTRACT NO. 68E44		
		ILLINOIS FEDERAL PROJECT		

3/14/2025 10: 48: 40AM

REV. 3/31/25

DISTRICT GENERAL NOTES

AVAILABILITY OF ELECTRONIC FILES
CADD FILES OF THIS PROJECT WILL BE MADE AVAILABLE TO THE CONTRACTOR AFTER CONTRACT AWARD. IF THERE IS A CONFLICT BETWEEN THE ELECTRONIC FILES AND THE PRINTED CONTRACT PLANS AND DOCUMENTS, THE PRINTED CONTRACT PLANS AND DOCUMENTS SHALL TAKE PRECEDENCE OVER THE ELECTRONIC FILES. THE CONTRACTOR SHALL ACCEPT ALL RISK ASSOCIATED WITH USING THE ELECTRONIC FILES AND SHALL HOLD THE DEPARTMENT HARMLESS FOR ANY ERRORS OR OMISSIONS IN THE ELECTRONIC FILES AND THE DATA CONTAINED THEREIN. ERRORS OR DELAYS RESULTING FROM THE USE OF THE ELECTRONIC FILES BY THE CONTRACTOR SHALL NOT RESULT IN AN EXTENSION OF TIME FOR ANY INTERIM OR FINAL COMPLETION DATE OR SHALL NOT BE CONSIDERED CAUSE FOR ADDITIONAL COMPENSATION. THE CONTRACTOR SHALL NOT USE, SHARE, OR DISTRIBUTE THESE ELECTRONIC FILES EXCEPT FOR THE PURPOSE OF CONSTRUCTING THIS CONTRACT. ANY CLAIMS BY THIRD PARTIES DUE TO USE OR ERRORS SHALL BE THE SOLE RESPONSIBILITY OF THE CONTRACTOR. THE CONTRACTOR SHALL INCLUDE THIS DISCLAIMER WITH THE TRANSFER OF THESE ELECTRONIC FILES TO ANY OTHER PARTIES AND SHALL INCLUDE APPROPRIATE LANGUAGE BINDING THEM TO SIMILAR RESPONSIBILITIES.

TREE REMOVAL - UTILITY RELOCATION
TREE REMOVAL MAY BE NECESSARY PRIOR TO UTILITY COMPANIES BEING ABLE TO RELOCATE THEIR FACILITIES OUTSIDE THE CONSTRUCTION LIMITS. THE CONTRACTOR SHOULD COORDINATE ANY CONTRACT TREE REMOVAL ACTIVITIES WITH THE UTILITY COMPANIES TO ELIMINATE CONFLICTS AND POTENTIAL DELAYS CAUSED BY UTILITY TREE REMOVAL ACTIVITIES OR INCOMPLETE UTILITY RELOCATIONS.

PLAN ELEVATIONS – U.S.G.S. MEAN SEA LEVEL DATUM
ALL ELEVATIONS SHOWN ON THE PLANS ARE ESTABLISHED FROM U.S.G.S MEAN SEA LEVEL DATUM.

COMMITMENTS
COMMITMENTS ARE NOT TO BE ALTERED WITHOUT THE WRITTEN APPROVAL OF ALL PARTIES TO WHICH THE COMMITMENT WAS MADE.

TREES THREE (3) INCHES OR GREATER IN DIAMETER AT CHEST HEIGHT WILL NOT BE CLEARED APRIL 1 THROUGH SEPTEMBER 30.

ILLINOIS AMERICAN WATER / SLUDGE MAINS:
THE CONTRACTOR SHALL LIMIT/MINIMIZE THEIR CROSSINGS OF THE ILLINOIS AMERICAN WATER (ILWACS) WATER AND SLUDGE MAINS WITHIN THE MARKED AREAS. IN LOCATIONS WHERE CROSSINGS ARE NECESSARY, THE CONTRACTOR SHALL UTILIZE CRANE MATS TO ENSURE THAT CONSTRUCTION TRAFFIC DOES NOT RESULT IN PRESSURES THAT EXCEED THOSE OF THE CURRENT SOIL CONDITIONS. EMPLOYEES OF ILWACS OR THEIR DESIGNATED CONSULTANTS SHALL HAVE ACCESS AT ALL TIMES TO THEIR FACILITIES FOR INSPECTION PURPOSES. PLEASE CONTACT CHRISTIAN S. VOLZ AT (309)566-4114 PRIOR TO ANY CONSTRUCTION ACTIVITIES WITHIN THE MARKED RESTRICTED AREAS.

ENVIRONMENTAL REVIEWS
PRIOR TO THE USE OF ANY PROPOSED BORROW AREAS, USE AREAS (TEMPORARY ACCESS ROADS, DETOURS, RUN-AROUNDS, ETC.) AND/OR WASTE AREAS, THE CONTRACTOR SHALL FILE THE REQUIRED ENVIRONMENTAL RESOURCE REQUEST SURVEYS ACCORDING TO SECTION 107.22 OF THE STANDARD SPECIFICATIONS. THESE SURVEYS ARE REQUIRED IN ORDER FOR THE DEPARTMENT TO CONDUCT CULTURAL AND BIOLOGICAL RESOURCE SURVEYS FOR THE PROPOSED SITE.

THE REQUIRED ENVIRONMENTAL RESOURCE DOCUMENTATION SHALL INCLUDE THE FOLLOWING:

- BDE FORM 2289 (BORROW SITE REVIEW)
- BDE FORM 2290 (WASTE/USE AREA REVIEW)
- A LOCATION MAP SHOWING THE SIZE LIMITS AND LOCATION OF THE USE AREA
- COLOR PHOTOGRAPHS DEPICTING THE USE AREA
- BORROW AREA ENTRY AGREEMENT FORM – D4 PI0101

PRIOR TO ANY WASTE MATERIALS BEING REMOVED FROM THE CONSTRUCTION SITE THE REQUIRED ENVIRONMENTAL RESOURCE SURVEYS SHALL BE OBTAINED AND FILED BY THE CONTRACTOR. EXCESS WASTE PRODUCTS REMOVED FROM THE CONSTRUCTION SITE SHALL BE DISPOSED OF AS REQUIRED IN SECTION 202.03 OF THE STANDARD SPECIFICATIONS.

ANY PROTRUDING METAL BARS SHALL BE REMOVED PRIOR TO THE DISPOSAL OF BROKEN CONCRETE AT APPROVED DISPOSAL SITES.

PLEASE NOTE THAT A MINIMUM OF FOUR WEEKS SHALL BE ALLOWED FOR THE DISTRICT TO OBTAIN THE REQUIRED WASTE SITE ENVIRONMENTAL CLEARANCES AND SIX WEEKS FOR THE REQUIRED BORROW SITE ENVIRONMENTAL CLEARANCES.

POLYMERIZED BITUMINOUS MATERIALS (TACK COAT) RATES

SURFACE TYPE	RESIDUAL RATE
MILLED (HMA OR PCC)	0.08 LB / SQ FT
EXISTING PAVEMENT	0.08 LB / SQ FT
FOG COAT (BETWEEN LIFTS)	0.08 LB / SQ FT

ORDERING LENGTH CONFIRMATION - DRAINAGE ITEMS
THE CONTRACTOR SHALL CONSULT WITH THE ENGINEER IN REGARD TO THE EXACT LENGTH OF THE BOX/PIPE CULVERTS, STORM SEWERS, AND/OR PIPE DRAINS REQUIRED PRIOR TO ORDERING THESE ITEMS.

SECURING DRAINAGE STRUCTURE GRATES
PRIOR TO ROUTING TRAFFIC ONTO THE SHOULDERS AS SHOWN IN THE STAGING PLANS, THE CONTRACTOR SHALL SECURE GRATINGS ON SHOULDER INLETS AS DIRECTED BY THE ENGINEER. THIS WORK WILL NOT BE PAID FOR SEPARATELY, BUT SHALL BE INCLUDED IN THE COST OF THE TRAFFIC CONTROL PAY ITEM.

ADDITIONAL SUPPLEMENTAL TRAFFIC CONTROL
THE DEPARTMENT RESERVES THE RIGHT AT ANY TIME TO ADD ADDITIONAL TRAFFIC CONTROL SYSTEMS OR DEVICES WITHIN THE ACTIVE CONTRACT LIMITS, BY MEANS OF AN ADDITIONAL CONTRACT. ALL TERMS OF ARTICLE 105.08 OF THE STANDARD SPECIFICATIONS SHALL BE FOLLOWED BY EACH CONTRACTOR.

SIGNING
SIGN LOCATIONS MAY VARY FROM THE STATIONS SHOWN ON THE PLANS IN ACCORDANCE WITH DIRECTIONS FROM THE ENGINEER AT THE TIME OF CONSTRUCTION. SIGN LOCATIONS MAY BE ADJUSTED IN THE FIELD TO AVOID ANY FOUND UTILITIES.

ALL WOOD POST LOCATIONS SHALL BE VERIFIED WITH THE BUREAU OF OPERATIONS, TRAFFIC SECTION, BEFORE INSTALLATION.

HOT-MIX ASPHALT MIXTURE REQUIREMENTS
THE FOLLOWING MIXTURE REQUIREMENTS ARE APPLICABLE FOR THIS PROJECT:

	PAVEMENT RESURFACING		HOT-MIX ASPHALT SHOULDERS (PAID FOR AS "HOT-MIX ASPHALT SHOULDERS, 8")	
MIXTURE USE(S):	POLYMERIZED HOT-MIX ASPHALT SURFACE COURSE, MIX "E", N70 (2")	POLYMERIZED HOT-MIX ASPHALT BINDER COURSE, IL-9.5, N70 (VAR.)	HOT-MIX ASPHALT SURFACE COURSE, IL-9.5FG, N50 (2")	HOT-MIX ASPHALT BINDER COURSE, IL-19.0, N50 (3" AND 3")
AC/PG:	SBS OR SBR 70-28	SBS OR SBR 70-28	PG 64-22	PG 64-22
DESIGN AIR VOIDS:	4.0% @ N-70	4.0% @ N-70	4.0% @ N-50	4.0% @ N-50
MIXTURE COMPOSITION (GRADATION MIXTURE):	IL-9.5	IL-9.5	IL-9.5FG	IL-19.0
FRICTION AGGREGATE:	MIXTURE E	N/A	MIXTURE C	N/A
QUALITY MANAGEMENT:	QC/QA	QC/QA	QC/QA	QC/QA
MATERIAL TRANSFER DEVICE:	NO	NO	NO	NO

NOTES:
1) INDIVIDUAL LIFT THICKNESSES OF EACH MIX WILL BE NO LESS THAN THREE (3) TIMES NOMINAL MAXIMUM AGGREGATE SIZE AND NO MORE THAN FIVE (5) TIMES NOMINAL AGGREGATE MAXIMUM SIZE, UNLESS OTHERWISE APPROVED BY THE ENGINEER.

2) FOR DESIGN PURPOSES, MIXTURE WEIGHT FOR ALL MIXES IS DETERMINED TO BE 112.0 LB./SQ. YARD/IN., UNLESS OTHERWISE NOTED.

3) SUBLOT SIZES FOR PFP AND QCP MIXES WILL BE 1,000 TONS, UNLESS OTHERWISE AGREED TO BY THE ENGINEER AND THE PAVING CONTRACTOR.

PROJECT SPECIFIC GENERAL NOTES

THE CONTRACTOR SHALL NOT ALLOW CONSTRUCTION DEBRIS TO FALL INTO THE RIVER. THE COST TO PREVENT DEBRIS FROM FALLING INTO THE RIVER IS THE RESPONSIBILITY OF THE CONTRACTOR.

THE CONTRACTOR SHALL SUBMIT TEMPORARY ACCESS PLANS TO THE ENGINEER FOR ANY WORK TO BE PERFORMED IN/FROM THE RIVER. THE CONTRACTOR IS RESPONSIBLE FOR ALL ACCESS COSTS AND OBTAINING ANY NECESSARY PERMITS. THERE ARE EXISTING STRUCTURE FOUNDATIONS (FROM THE OLD EASTBOUND U.S. 150 BRIDGE) BENEATH THE RIVER BOTTOM JUST SOUTH OF SN 090-0115. OLD STRUCTURE PLANS FOR THE EASTBOUND STRUCTURE ARE AVAILABLE UPON REQUEST.

LIST OF UTILITY OWNERS AND CONTACTS

ILLINOIS AMERICAN WATER
MR. CHARLES BARTON
7500 N. HARKER DRIVE
PEORIA, IL 61615
(309) 258-9151
CHARLES.BARTON@AMWATER.COM

COMCAST
MR. PAUL NASH
3517 DRIES LANE
PEORIA, IL 61604
(309) 643-3385
PAUL_NASH@COMCAST.COM

GREATER PEORIA SANITARY DISTRICT
MR. JOHN BOYLE
2322 SOUTH DARST STREET
PEORIA, IL 61607
(309) 678-9035
JBOYLE@GPSD.ORG

BLUEBIRD NETWORK
MR. JEREMY CARR
10024 OFFICE CENTER AVENUE, SUITE 201
ST. LOUIS, MO 63128
(309) 713-6442
JEREMY.CARR@BLUEBIRDNETWORK.COM

WINDSTREAM
MR. DONALD (SCOTT) BUILTA
(309) 212-3870
DONALD.BUILTA@WINDSTREAM.COM

COORDINATION

SEE SPECIAL PROVISIONS FOR UNITED STATES COAST GUARD (U.S.C.G.) REQUIREMENTS.

U.S.C.G. CONTACT:
MR. PETER J. SAMBOR, M.P.A.
U.S.C.G. BRIDGE MANAGEMENT SPECIALIST
COAST GUARD 8TH DISTRICT
1222 SPRUCE STREET, SUITE 2. 102D
ST. LOUIS, MO 63103
(314) 269-2380
U.S.C.G. 24-HOUR WATCH CENTER: (314) 269-2332

SEE SPECIAL PROVISIONS FOR TAZEWELL AND PEORIA RAILROAD (T.Z.P.R.) REQUIREMENTS.

T.Z.P.R. CONTACTS:
TAZEWELL AND PEORIA RAILROAD, INC.
301 WESLEY ROAD
CREVE COEUR, IL 61610

MR. GREG BREASTON (ENGINEERING INQUIRIES)
(904) 999-3378
GREG.BREASTON@GWRR.COM

MS. RACHAEL POWERS (PROPERTY RIGHTS INQUIRIES)
RPOWERS@BENESCH.COM

MS. CRYSTAL GALBREATH (UTILITY AND ACCESS PERMITS INQUIRIES)
(904) 596-7782
CRYSTAL.GALBREATH@GWRR.COM

CODE NO.	ITEM	UNIT	TOTAL QUANTITY	CONSTRUCTION CODE 80% FEDERAL / 20% STATE BRIDGE 0013 S.N. 072-0168	BRIDGE 0013 S.N. 090-0115
20100500	TREE REMOVAL, ACRES	ACRE	0.25	0	0.25
20101000	TEMPORARY FENCE	FOOT	1587	0	1587
20101400	NITROGEN FERTILIZER NUTRIENT	POUND	90	0	90
20101500	PHOSPHORUS FERTILIZER NUTRIENT	POUND	90	0	90
20101600	POTASSIUM FERTILIZER NUTRIENT	POUND	90	0	90
20200100	EARTH EXCAVATION	CU YD	2701	0	2701
20300100	CHANNEL EXCAVATION	CU YD	2633	0	2633
20800150	TRENCH BACKFILL	CU YD	10	0	10
21101615	TOPSOIL FURNISH AND PLACE, 4"	SQ YD	5682	0	5682
21400100	GRADING AND SHAPING DITCHES	FOOT	382	0	382
25000210	SEEDING, CLASS 2A	ACRE	1	0	1
25000750	MOWING	ACRE	5	0	5
25100115	MULCH, METHOD 2	ACRE	1	0	1

CODE NO.	ITEM	UNIT	TOTAL QUANTITY	CONSTRUCTION CODE 80% FEDERAL / 20% STATE BRIDGE 0013 S.N. 072-0168	BRIDGE 0013 S.N. 090-0115
25100635	HEAVY DUTY EROSION CONTROL BLANKET	SQ YD	1375	0	1375
28000250	TEMPORARY EROSION CONTROL SEEDING	POUND	24	0	24
28000305	TEMPORARY DITCH CHECKS	FOOT	95	0	95
28000400	PERIMETER EROSION BARRIER	FOOT	1402	0	1402
28000500	INLET AND PIPE PROTECTION	EACH	25	0	25
28000510	INLET FILTERS	EACH	25	0	25
28100801	STONE DUMPED RIPRAP, CLASS A1	TON	15	0	15
28100811	STONE DUMPED RIPRAP, CLASS A6	TON	4120	0	4120
30300011	AGGREGATE SUBGRADE IMPROVEMENT	TON	2378	0	2378
40600295	POLYMERIZED BITUMINOUS MATERIALS (TACK COAT)	POUND	4919	0	4919
40603208	POLYMERIZED HOT-MIX ASPHALT BINDER COURSE, IL-9.5, N70	TON	83	0	83
40604172	POLYMERIZED HOT-MIX ASPHALT SURFACE COURSE, IL-9.5, MIX "E", N70	TON	104	0	104
42000080	PAVEMENT CONNECTOR (PCC) FOR BRIDGE APPROACH SLAB	SQ YD	207	0	207
42000411	PORTLAND CEMENT CONCRETE PAVEMENT 9 1/2" (JOINTED)	SQ YD	365	0	365

* SPECIALTY ITEM

CODE NO.	ITEM	UNIT	TOTAL QUANTITY	CONSTRUCTION CODE 80% FEDERAL / 20% STATE BRIDGE 0013 S.N. 072-0168	BRIDGE 0013 S.N. 090-0115
42001300	PROTECTIVE COAT	SQ YD	1678	0	1678
44000100	PAVEMENT REMOVAL	SQ YD	2628	0	2628
44000500	COMBINATION CURB AND GUTTER REMOVAL	FOOT	110	0	110
44004000	PAVED DITCH REMOVAL	FOOT	34	0	34
44004250	PAVED SHOULDER REMOVAL	SQ YD	440	0	440
48101500	AGGREGATE SHOULDERS, TYPE B 6"	SQ YD	32	0	32
48203029	HOT-MIX ASPHALT SHOULDERS, 8"	SQ YD	2152	0	2152
48300300	PORTLAND CEMENT CONCRETE SHOULDERS 8"	SQ YD	70	0	70
50102400	CONCRETE REMOVAL	CU YD	84.7	70.5	14.2
50104701	REMOVAL OF EXISTING CONCRETE DECK NO. 1	EACH	1	1	0
50104702	REMOVAL OF EXISTING CONCRETE DECK NO. 2	EACH	1	0	1
50105220	PIPE CULVERT REMOVAL	FOOT	256	0	256
50157300	PROTECTIVE SHIELD	SQ YD	4459	932	3527
50200100	STRUCTURE EXCAVATION	CU YD	184	184	0

CODE NO.	ITEM	UNIT	TOTAL QUANTITY	CONSTRUCTION CODE 80% FEDERAL / 20% STATE BRIDGE 0013 S.N. 072-0168	BRIDGE 0013 S.N. 090-0115
50300100	FLOOR DRAINS	EACH	173	0	173
50300225	CONCRETE STRUCTURES	CU YD	101.5	57	44.5
50300255	CONCRETE SUPERSTRUCTURE	CU YD	8501.2	529.8	7971.4
50300300	PROTECTIVE COAT	SQ YD	28350	2293	26057
50301350	CONCRETE SUPERSTRUCTURE (APPROACH SLAB)	CU YD	356.2	203.0	153.2
50500405	FURNISHING AND ERECTING STRUCTURAL STEEL	POUND	37300	0	37300
50500505	STUD SHEAR CONNECTORS	EACH	100637	4500	96137
50800205	REINFORCEMENT BARS, EPOXY COATED	POUND	2254820	217460	2037360
50800515	BAR SPLICERS	EACH	17274	1016	16258
50800530	MECHANICAL SPLICERS	EACH	53	0	53
50900805	PEDESTRIAN RAILING	FOOT	519	0	519
51500100	NAME PLATES	EACH	2	1	1
52000110	PREFORMED JOINT STRIP SEAL	FOOT	504	0	504
52000216	FINGER PLATE EXPANSION JOINT, 5"	FOOT	203.5	0	203.5

CODE NO.	ITEM	UNIT	TOTAL QUANTITY	CONSTRUCTION CODE 80% FEDERAL / 20% STATE BRIDGE 0013 S.N. 072-0168	BRIDGE 0013 S.N. 090-0115
52000220	FINGER PLATE EXPANSION JOINT, 6"	FOOT	39.5	0	39.5
52000600	FABRIC REINFORCED ELASTOMERIC TROUGH	FOOT	270	0	270
52100010	ELASTOMERIC BEARING ASSEMBLY, TYPE I	EACH	20	20	0
52100510	ANCHOR BOLTS, 3/4"	EACH	80	80	0
52100520	ANCHOR BOLTS, 1"	EACH	144	0	144
52100530	ANCHOR BOLTS, 1 1/4"	EACH	68	0	68
52100540	ANCHOR BOLTS, 1 1/2"	EACH	16	0	16
52100560	ANCHOR BOLTS, 2"	EACH	16	0	16
52200010	TEMPORARY SHEET PILING	SQ FT	335	335	0
52318802	DRAINAGE SYSTEM FOR STRUCTURES	L SUM	1	0	1
5422C012	PIPE CULVERTS, CLASS C, TYPE 2 12" (TEMPORARY)	FOOT	241	0	241
54262712	METAL FLARED END SECTIONS 12"	EACH	1	0	1
550A0340	STORM SEWERS, CLASS A, TYPE 2 12"	FOOT	53	0	53
55100500	STORM SEWER REMOVAL 12"	FOOT	52	0	52

CODE NO.	ITEM	UNIT	TOTAL QUANTITY	CONSTRUCTION CODE 80% FEDERAL / 20% STATE BRIDGE 0013 S.N. 072-0168	BRIDGE 0013 S.N. 090-0115
58600101	GRANULAR BACKFILL FOR STRUCTURES	CU YD	184	184	0
58700300	CONCRETE SEALER	SQ FT	7023	0	7023
59000200	EPOXY CRACK INJECTION	FOOT	270	46	224
59100100	GEOCOMPOSITE WALL DRAIN	SQ YD	107	107	0
60100060	CONCRETE HEADWALLS FOR PIPE DRAINS	EACH	2	2	0
60100945	PIPE DRAINS 12"	FOOT	8	0	8
60146304	PIPE UNDERDRAINS FOR STRUCTURES 4"	FOOT	269	269	0
60237420	INLETS, TYPE A, TYPE 20 FRAME AND GRATE	EACH	1	0	1
60240324	INLETS, TYPE B, TYPE 20 FRAME AND GRATE	EACH	1	0	1
60250200	CATCH BASINS TO BE ADJUSTED	EACH	2	0	2
60260100	INLETS TO BE ADJUSTED	EACH	8	0	8
60500040	REMOVING MANHOLES	EACH	1	0	1
60500060	REMOVING INLETS	EACH	2	0	2
60605100	COMBINATION CONCRETE CURB AND GUTTER, TYPE B-6.24 (ABUTTING EXISTING PAVEMENT)	FOOT	110	0	110

* SPECIALTY ITEM

	CODE NO.	ITEM	UNIT	TOTAL QUANTITY	CONSTRUCTION CODE 80% FEDERAL / 20% STATE BRIDGE 0013 S.N. 072-0168	BRIDGE 0013 S.N. 090-0115
	61000050	CONCRETE THRUST BLOCKS	EACH	1	0	1
	61000335	TYPE G INLET BOX, STANDARD 610001	EACH	1	0	1
*	63000001	STEEL PLATE BEAM GUARDRAIL, TYPE A, 6 FOOT POSTS	FOOT	987.5	0	987.5
*	63100085	TRAFFIC BARRIER TERMINAL, TYPE 6	EACH	3	0	3
*	63100167	TRAFFIC BARRIER TERMINAL, TYPE 1 (SPECIAL) TANGENT	EACH	1	0	1
*	63100169	TRAFFIC BARRIER TERMINAL, TYPE 1 (SPECIAL) FLARED	EACH	1	0	1
	63200310	GUARDRAIL REMOVAL	FOOT	757	0	757
	63700380	CONCRETE BARRIER, VARIABLE CROSS SECTION 44 INCH HEIGHT	FOOT	800	0	800
	64300770	IMPACT ATTENUATORS (SEVERE USE, NARROW), TEST LEVEL 3	EACH	1	0	1
*	66900200	NON-SPECIAL WASTE DISPOSAL	CU YD	2826	0	2826
*	66900530	SOIL DISPOSAL ANALYSIS	EACH	1	0	1
*	66901001	REGULATED SUBSTANCES PRE-CONSTRUCTION PLAN	L SUM	1	0	1
*	66901003	REGULATED SUBSTANCES FINAL CONSTRUCTION REPORT	L SUM	1	0	1
*	66901006	REGULATED SUBSTANCES MONITORING	CAL DA	28	0	28
	67000400	ENGINEER'S FIELD OFFICE, TYPE A	CAL MO	36	0	36
	67000600	ENGINEER'S FIELD LABORATORY	CAL MO	36	0	36
	67100100	MOBILIZATION	L SUM	1	0	1
	70103815	TRAFFIC CONTROL SURVEILLANCE	CAL DA	10	0	10
	70107025	CHANGEABLE MESSAGE SIGN	CAL DA	2100	0	2100
	70300100	SHORT TERM PAVEMENT MARKING	FOOT	13096	0	13096

*= SPECIALTY ITEM

CODE NO.	ITEM	UNIT	TOTAL QUANTITY	CONSTRUCTION CODE 80% FEDERAL / 20% STATE BRIDGE 0013 S.N. 072-0168	BRIDGE 0013 S.N. 090-0115
70300150	SHORT TERM PAVEMENT MARKING REMOVAL	SQ FT	70788	0	70788
70307100	TEMPORARY PAVEMENT MARKING LETTERS AND SYMBOLS - TYPE IV TAPE	SQ FT	795	0	795
70307120	TEMPORARY PAVEMENT MARKING - LINE 4" - TYPE IV TAPE	FOOT	99730	0	99730
70307140	TEMPORARY PAVEMENT MARKING - LINE 8" - TYPE IV TAPE	FOOT	23124	0	23124
70307160	TEMPORARY PAVEMENT MARKING - LINE 12"- TYPE IV TAPE	FOOT	6814	0	6814
70307210	TEMPORARY PAVEMENT MARKING - LINE 24"- TYPE IV TAPE	FOOT	492	0	492
70400100	TEMPORARY CONCRETE BARRIER	FOOT	7112.5	0	7112.5
70400125	PINNING TEMPORARY CONCRETE BARRIER	EACH	900	0	900
70400200	RELOCATE TEMPORARY CONCRETE BARRIER	FOOT	5765.5	0	5765.5
70500100	TEMPORARY STEEL PLATE BEAM GUARDRAIL, TYPE A	FOOT	150	0	150
70500615	TEMPORARY TRAFFIC BARRIER TERMINAL, TYPE 1	EACH	1	0	1
70500665	TEMPORARY TRAFFIC BARRIER TERMINAL, TYPE 6	EACH	1	0	1
70600255	IMPACT ATTENUATORS, TEMPORARY (FULLY REDIRECTIVE, NARROW), TEST LEVEL 2	EACH	2	0	2
70600260	IMPACT ATTENUATORS, TEMPORARY (FULLY REDIRECTIVE, NARROW), TEST LEVEL 3	EACH	3	0	3

	CODE NO.	ITEM	UNIT	TOTAL QUANTITY	CONSTRUCTION CODE 80% FEDERAL / 20% STATE BRIDGE 0013 S.N. 072-0168	BRIDGE 0013 S.N. 090-0115
	70600322	IMPACT ATTENUATORS, RELOCATE (FULLY REDIRECTIVE, NARROW), TEST LEVEL 2	EACH	6	0	6
	70600332	IMPACT ATTENUATORS, RELOCATE (FULLY REDIRECTIVE, NARROW), TEST LEVEL 3	EACH	8	0	8
	70600370	IMPACT ATTENUATORS, RELOCATE (SEVERE USE, NARROW), TEST LEVEL 3	EACH	1	0	1
*	72000100	SIGN PANEL - TYPE 1	SQ FT	12	0	12
*	72000300	SIGN PANEL - TYPE 3	SQ FT	824	0	824
*	72400330	REMOVE SIGN PANEL - TYPE 3	SQ FT	918	0	918
*	72400710	RELOCATE SIGN PANEL - TYPE 1	SQ FT	55	0	55
*	72501000	TERMINAL MARKER - DIRECT APPLIED	EACH	4	0	4
*	72900100	METAL POST - TYPE A	FOOT	17	0	17
	73300100	OVERHEAD SIGN STRUCTURE - SPAN, TYPE I-A (4'-0" X 4'-6")	FOOT	50.4	0	50.4
	73302170	OVERHEAD SIGN STRUCTURE - CANTILEVER, TYPE II-C-A (36" X 5'-6")	FOOT	27.5	0	27.5
	73304000	OVERHEAD SIGN STRUCTURE - BRIDGE MOUNTED	FOOT	24.5	0	24.5
*	73400200	DRILLED SHAFT CONCRETE FOUNDATIONS	CU YD	9.3	0	9.3
	73500020	REMOVE OVERHEAD SIGN STRUCTURE - MONOTUBE	EACH	2	0	2
	73602000	REMOVE OVERHEAD SIGN STRUCTURE - BRIDGE MOUNTED	EACH	1	0	1

*= SPECIALTY ITEM

	CODE NO.	ITEM	UNIT	TOTAL QUANTITY	CONSTRUCTION CODE 80% FEDERAL / 20% STATE BRIDGE 0013 S.N. 072-0168	BRIDGE 0013 S.N. 090-0115
	73700100	REMOVE GROUND MOUNTED SIGN SUPPORT	EACH	1	0	1
*	78003101	PREFORMED PLASTIC PAVEMENT MARKING, TYPE B - STANDARD - LETTERS AND SYMBOLS	SQ FT	63	0	63
*	78003111	PREFORMED PLASTIC PAVEMENT MARKING, TYPE B - STANDARD - LINE 4"	FOOT	1767	0	1767
*	78003131	PREFORMED PLASTIC PAVEMENT MARKING, TYPE B - STANDARD - LINE 6"	FOOT	21831	0	21831
*	78003141	PREFORMED PLASTIC PAVEMENT MARKING, TYPE B -STANDARD - LINE 8"	FOOT	9837	0	9837
*	78003151	PREFORMED PLASTIC PAVEMENT MARKING, TYPE B - STANDARD - LINE 12"	FOOT	3094	0	3094
*	78009000	MODIFIED URETHANE PAVEMENT MARKING - LETTERS AND SYMBOLS	SQ FT	156	0	156
*	78009004	MODIFIED URETHANE PAVEMENT MARKING - LINE 4"	FOOT	6659	0	6659
*	78009006	MODIFIED URETHANE PAVEMENT MARKING - LINE 6"	FOOT	12714	0	12714
*	78009008	MODIFIED URETHANE PAVEMENT MARKING - LINE 8"	FOOT	2680	0	2680
*	78009012	MODIFIED URETHANE PAVEMENT MARKING - LINE 12"	FOOT	1068	0	1068
*	78009024	MODIFIED URETHANE PAVEMENT MARKING - LINE 24"	FOOT	90	0	90
*	78011025	GROOVING FOR RECESSED PAVEMENT MARKING 5"	FOOT	8425	0	8425
*	78011035	GROOVING FOR RECESSED PAVEMENT MARKING 7"	FOOT	34545	0	34545

*= SPECIALTY ITEM

	CODE NO.	ITEM	UNIT	TOTAL QUANTITY	CONSTRUCTION CODE 80% FEDERAL / 20% STATE BRIDGE 0013 S.N. 072-0168	BRIDGE 0013 S.N. 090-0115
*	78011045	GROOVING FOR RECESSED PAVEMENT MARKING 9"	FOOT	12517	0	12517
*	78011065	GROOVING FOR RECESSED PAVEMENT MARKING 13"	FOOT	4162	0	4162
*	78011125	GROOVING FOR RECESSED PAVEMENT MARKING 25"	FOOT	90	0	90
*	78100100	RAISED REFLECTIVE PAVEMENT MARKER	EACH	20	0	20
*	78100300	REPLACEMENT REFLECTOR	EACH	585	0	585
	78300200	RAISED REFLECTIVE PAVEMENT MARKER REMOVAL	EACH	20	0	20
	78300202	PAVEMENT MARKING REMOVAL - WATER BLASTING	SQ FT	32988	0	32988
*	81028350	UNDERGROUND CONDUIT, PVC, 2" DIA.	FOOT	720	600	120
*	81100300	CONDUIT ATTACHED TO STRUCTURE, 1" DIA., GALVANIZED STEEL	FOOT	615	0	615
*	81200220	CONDUIT EMBEDDED IN STRUCTURE, 1 1/2" DIA., PVC	FOOT	4843	415	4428
*	81300220	JUNCTION BOX, STAINLESS STEEL, ATTACHED TO STRUCTURE, 6" X 6" X 4"	EACH	7	0	7
*	81300320	JUNCTION BOX, STAINLESS STEEL, ATTACHED TO STRUCTURE, 8" X 8" X 6"	EACH	7	0	7
*	81300600	JUNCTION BOX, STAINLESS STEEL, ATTACHED TO STRUCTURE, 14" X 8" X 6"	EACH	7	0	7
*	81603035	UNIT DUCT, 600V, 2-1C NO.6, 1/C NO.6 GROUND, (XLP-TYPE USE), 1" DIA. POLYETHYLENE	FOOT	1121	0	1121
*	81702120	ELECTRIC CABLE IN CONDUIT, 600V (XLP-TYPE USE) 1/C NO. 8	FOOT	6572	0	6572

*= SPECIALTY ITEM

	CODE NO.	ITEM	UNIT	TOTAL QUANTITY	CONSTRUCTION CODE 80% FEDERAL / 20% STATE BRIDGE 0013 S.N. 072-0168	BRIDGE 0013 S.N. 090-0115
*	81702130	ELECTRIC CABLE IN CONDUIT, 600V (XLP-TYPE USE) 1/C NO. 6	FOOT	16322	439	15883.0
*	82110007	LUMINAIRE, LED, ROADWAY, OUTPUT DESIGNATION G	EACH	26	2	24
*	82200608	WATERWAY OBSTRUCTION WARNING LUMINAIRE, LED, 180 DEGREE RED	EACH	4	0	4
*	82200609	WATERWAY OBSTRUCTION WARNING LUMINAIRE, LED, 360 DEGREE GREEN	EACH	2	0	2
*	83060450	LIGHT POLE, GALVANIZED STEEL, 45 FT. M.H., 15 FT. MAST ARM	EACH	16	2	14
*	83060550	LIGHT POLE, GALVANIZED STEEL, 50 FT. M.H., 15 FT. MAST ARM	EACH	3	0	3
*	83600356	LIGHT POLE FOUNDATION, METAL, 15" BOLT CIRCLE, 8 5/8" X 6'	EACH	2	0	2
*	83600358	LIGHT POLE FOUNDATION, METAL, 15" BOLT CIRCLE, 8 5/8" X 8'	EACH	3	0	3
*	87900100	DRILL EXISTING FOUNDATION	EACH	1	0	1
	X0322559	BOLT REPLACEMENT	EACH	65	0	65
	X0322938	TEMPORARY END SECTION	EACH	1	0	1
	X0325734	SLOTTED DRAIN REMOVAL	FOOT	244	0	244
	X0325941	ACCESS LADDER	EACH	5	0	5
	X0327739	MISCELLANEOUS ELECTRICAL WORK	L SUM	1	0	1

* SPECIALTY ITEM

MODEL: Default
FILE NAME: P:\4312-VBRrC1LugageRehab\CADD\Structural_Front Sheets - Cover, SOQ, etc\D468E44-sht-SOQ12.dgn

MODJESKI and MASTERS

USER NAME = AECook	DESIGNED - RLM	REVISED -	
	DRAWN - AEC	REVISED -	
PLOT SCALE = 2:0.0000 ':" / in.	CHECKED - RLM	REVISED -	
PLOT DATE = 3/14/2025	DATE - 1/17/2025	REVISED -	

STATE OF ILLINOIS
DEPARTMENT OF TRANSPORTATION

US 150 WESTBOUND McCLUGAGE BRIDGE PROJECT
SUMMARY OF QUANTITIES

SCALE: N.T.S. | SHEET 12 OF 16 SHEETS | STA. | TO STA.

F.A.P RTE.	SECTION	COUNTY	TOTAL SHEETS	SHEET NO.
317	(15B-1)BP,BRR; (14HB-1)BRR	PEO/TAZ	418	16
		CONTRACT NO. 68E44		
	ILLINOIS	FED. AID PROJECT		

3/14/2025 10:00:36 AM

REV. 3/31/25

CODE NO.	ITEM	UNIT	TOTAL QUANTITY	CONSTRUCTION CODE 80% FEDERAL / 20% STATE BRIDGE 0013 S.N. 072-0168	BRIDGE 0013 S.N. 090-0115
X4401198	HOT-MIX ASPHALT SURFACE REMOVAL, VARIABLE DEPTH	SQ YD	929	0	929
X5030250	BRIDGE DECK GROOVING (LONGITUDINAL)	SQ YD	19921	1668	18253
X5051204	STRUCTURAL STEEL REMOVAL	POUND	27760	0	27760
X5051206	STRUCTURAL STEEL REPAIR	POUND	113210	0	113210
X5060601	CONTAINMENT AND DISPOSAL OF NON-LEAD PAINT CLEANING RESIDUES NO. 1	L SUM	1	1	0
X5060602	CONTAINMENT AND DISPOSAL OF NON-LEAD PAINT CLEANING RESIDUES NO. 2	L SUM	1	0	1
X5080530	BAR TERMINATORS	EACH	1101	475	626
X5211610	HIGH LOAD MULTI-ROTATIONAL BEARINGS, DISC, GUIDED EXPANSION-200K	EACH	30	0	30
X5211625	HIGH LOAD MULTI-ROTATIONAL BEARINGS, DISC, GUIDED EXPANSION-500K	EACH	2	0	2
X5211630	HIGH LOAD MULTI-ROTATIONAL BEARINGS, DISC, GUIDED EXPANSION-600K	EACH	19	0	19
X5211645	HIGH LOAD MULTI-ROTATIONAL BEARINGS, DISC, GUIDED EXPANSION-900K	EACH	2	0	2
X5211655	HIGH LOAD MULTI-ROTATIONAL BEARINGS, DISC, GUIDED EXPANSION-1250K	EACH	4	0	4
X5230152	CLEANING DRAINAGE SYSTEM	L SUM	1	0	1
X5230174	DRAINAGE SCUPPERS, DS-11	EACH	120	1	119
X5427602	REMOVE EXISTING FLARED END SECTION	EACH	1	0	1
X5510011	PROPOSED STORM SEWER CONNECTION TO EXISTING MANHOLE	EACH	3	0	3
X6010003	PIPE DRAIN REMOVAL	FOOT	8	0	8
X6024875	TEMPORARY INLET	EACH	1	0	1
X6061460	PAVED DITCH (SPECIAL)	FOOT	34	0	34

* SPECIALTY ITEM

CODE NO.	ITEM	UNIT	TOTAL QUANTITY	CONSTRUCTION CODE 80% FEDERAL / 20% STATE BRIDGE 0013 S.N. 072-0168	BRIDGE 0013 S.N. 090-0115
X6350204	LINEAR DELINEATOR PANELS, 4 INCH	EACH	14	0	14
X6370048	CONCRETE BARRIER BASE (SPECIAL)	FOOT	491	0	491
X6640108	FENCE REMOVAL AND REINSTALLATION	FOOT	15	0	15
X7010216	TRAFFIC CONTROL AND PROTECTION, (SPECIAL)	L SUM	1	0	1
X7830050	RAISED REFLECTIVE PAVEMENT MARKER, REFLECTOR REMOVAL	EACH	585	0	585
X8440128	REMOVE EXISTING LIGHTING SYSTEM	L SUM	1	0	1
X8950130	MODIFY EXISTING LIGHTING CONTROLLER	EACH	1	0	1
Z0001002	GUARDRAIL AGGREGATE EROSION CONTROL	TON	225	0	225
Z0001899	JACK AND REMOVE EXISTING BEARINGS	EACH	81	20	61
Z0007101	CONTAINMENT AND DISPOSAL OF LEAD PAINT CLEANING RESIDUES NO. 1	L SUM	1	0	1
Z0010501	CLEANING AND PAINTING STEEL BRIDGE NO. 1	L SUM	1	1	0
Z0010502	CLEANING AND PAINTING STEEL BRIDGE NO. 2	L SUM	1	0	1

* SPECIALTY ITEM

MODEL: Default
FILE NAME: P:\4312-VBRrCLugageRehab\CADD\Structural_Front Sheets - Cover, SOQ, etc\D468E44-sht-SOQ14.dgn

MODJESKI-MASTERS

USER NAME = AECook	DESIGNED - RLM	REVISED -	
	DRAWN - AEC	REVISED -	
PLOT SCALE = 2:0.0000 ':" / in.	CHECKED - RLM	REVISED -	
PLOT DATE = 2/14/2025	DATE - 1/17/2025	REVISED -	

STATE OF ILLINOIS
DEPARTMENT OF TRANSPORTATION

US 150 WESTBOUND McCLUGAGE BRIDGE PROJECT
SUMMARY OF QUANTITIES

SCALE: N.T.S. | SHEET 14 OF 16 SHEETS | STA. | TO STA.

F.A.P RTE.	SECTION	COUNTY	TOTAL SHEETS	SHEET NO.
317	(15B-1)BP,BRR; (14HB-1)BRR	PEO/TAZ	418	18
		CONTRACT NO. 68E44		
	ILLINOIS	FED. AID PROJECT		

2/14/2025 10:21:19 AM

REV. 3/31/25

CODE NO.	ITEM	UNIT	TOTAL QUANTITY	CONSTRUCTION CODE 80% FEDERAL / 20% STATE BRIDGE 0013 S.N. 072-0168	BRIDGE 0013 S.N. 090-0115
Z0012754	STRUCTURAL REPAIR OF CONCRETE (DEPTH EQUAL TO OR LESS THAN 5 INCHES)	SQ FT	1830	0	1830
Z0012755	STRUCTURAL REPAIR OF CONCRETE (DEPTH GREATER THAN 5 INCHES)	SQ FT	83	0	83
Z0013798	CONSTRUCTION LAYOUT	L SUM	1	0	1
X5230190	DRAINAGE SCUPPERS, DS-33	EACH	2	0	2
Z0029090	DIAMOND GRINDING (BRIDGE SECTION)	SQ YD	21520	1958	19562
Z0034396	MODULAR EXPANSION JOINT 12"	FOOT	43	0	43
Z0048665	RAILROAD PROTECTIVE LIABILITY INSURANCE	L SUM	1	0	1
Z0062456	TEMPORARY PAVEMENT	SQ YD	642	0	642

* SPECIALTY ITEM

CODE NO.	ITEM	UNIT	TOTAL QUANTITY	CONSTRUCTION CODE 80% FEDERAL / 20% STATE BRIDGE 0013 S.N. 072-0168	BRIDGE 0013 S.N. 090-0115
X2840110	FILTER MATTRESS	SQ YD	2420	0	2420
X5211660	HIGH LOAD MULTI-ROTATIONAL BEARINGS, DISC, GUIDED EXPANSION-1500K	EACH	2	0	2
X5211665	HIGH LOAD MULTI-ROTATIONAL BEARINGS, DISC, GUIDED EXPANSION-1750K	EACH	2	0	2
Ø Z0076600	TRAINEES	HOUR	2,000	2,000	
Ø Z0076604	TRAINEES - TRAINING PROGRAM GRADUATE	HOUR	2,000	2,000	

* SPECIALTY ITEM Ø 0042

MODEL: Default
FILE NAME: P:\4312-VBR\CLugageRehab\CADD\Structural_Front Sheets - Cover SOQ, etc\D468E44-sht-SOQ16.dgn

MODJESKI and MASTERS

USER NAME = AECook	DESIGNED - RLM	REVISED -	
	DRAWN - AEC	REVISED -	
PLOT SCALE = 2:0.0000 ':" / in.	CHECKED - RLM	REVISED -	
PLOT DATE = 3/13/2025	DATE - 1/17/2025	REVISED -	

STATE OF ILLINOIS
DEPARTMENT OF TRANSPORTATION

US 150 WESTBOUND McCLUGAGE BRIDGE PROJECT
SUMMARY OF QUANTITIES

SCALE: N.T.S. | SHEET 16 OF 16 SHEETS | STA. | TO STA.

F.A.P RTE.	SECTION	COUNTY	TOTAL SHEETS	SHEET NO.
317	(15B-1)BP,BRR; (14HB-1)BRR	PEO/TAZ	418	20
		CONTRACT NO. 68E44		
	ILLINOIS	FED. AID PROJECT		

3/13/2025 11:31:37 AM

REV. 4/3/25 REV. 3/31/25 REV. 3/25/25

EARTHWORK SUMMARY

LOCATION			20200100 EARTH EXCAVATION	EXCAVATION TO BE USED IN EMBANKMENT ADJUSTED FOR 25% SHRINKAGE	EMBANKMENT	EARTHWORK BALANCE WASTE (+) OR SHORTAGE (-)
			CU YD	CU YD	CU YD	CU YD
McCLUGAGE BRIDGE						
715+54.86	TO	716+68.56	150	113	2	111
246+76.03	TO	256+12.34	811	608	854	-246
2101+50.00	TO	2107+50.00	800	600	76	524
TEMPORARY RAMP (PRESTAGE)						
101+25.00	TO	104+43.76	65	49	552	-503
TEMPORARY RAMP (POSTSTAGE A)						
100+00.00	TO	104+43.76	875	656	16	640
TOTALS			2,701	2,026	1,500	526

PAVEMENT AND SHOULDER SCHEDULE

LOCATION		30300011 AGGREGATE SUBGRADE IMPROVEMENT	40600295 POLYMERIZED BITUMINOUS MATERIALS (TACK COAT)	40603208 POLYMERIZED HOT-MIX ASPHALT BINDER COURSE, IL-9.5, N70	40604172 POLYMERIZED HOT-MIX ASPHALT SURFACE COURSE, IL-9.5, MIX "E", N70	42000080 PAVEMENT CONNECTOR (PCC) FOR BRIDGE APPROACH SLAB	42000411 PORTLAND CEMENT CONCRETE PAVEMENT 9 1/2" (JOINTED)	42001300 PROTECTIVE COAT	48203029 HOT-MIX ASPHALT SHOULDERS, 8"	48300300 PORTLAND CEMENT CONCRETE SHOULDERS 8"
BEGIN STATION	END STATION	TON	POUND	TON	TON	SQ YD	SQ YD	SQ YD	SQ YD	SQ YD
McCLUGAGE BRIDGE										
START	201+00.00	1574	1,841	0	0	140	365	575	1,279	70
201+00.00	216+00.00	0	0	0	0	0	0	0	0	0
216+00.00	231+00.00	0	0	0	0	0	0	0	0	0
231+00.00	246+00.00	0	0	0	0	0	0	0	0	0
246+00.00	END	579	2,500	83	104	67	0	67	807	0
TEMPORARY RAMP										
100+00.00	104+35.00	225	578	0	0	0	0	0	66	0
FROM MEDIAN BARRIER SCHEDULE								1,036		
TOTAL		2,378	4,919	83	104	207	365	1,678	2,152	70

REMOVAL SCHEDULE

LOCATION		44000100 PAVEMENT REMOVAL	44004250 PAVED SHOULDER REMOVAL	63200310 GUARDRAIL REMOVAL	X4401198 HOT MIX ASPHALT SURFACE REMOVAL, VARIABLE DEPTH
BEGIN STATION	END STATION	SQ YD	SQ YD	FOOT	SQ YD
McCLUGAGE BRIDGE					
START	201+00.00	1,925	221	40	0
201+00.00	216+00.00	0	0	0	0
216+00.00	231+00.00	0	0	0	0
231+00.00	246+00.00	0	0	0	0
246+00.00	END	61	153	717	929
TEMPORARY RAMP					
100+00.00	104+35.00	642	66	0	0
TOTAL		2,628	440	757	929

GUARDRAIL SCHEDULE

LOCATION			63000001 STEEL PLATE BEAM GUARDRAIL, TYPE A, 6 FOOT POSTS	63100085 TRAFFIC BARRIER TERMINAL, TYPE 6	63100167 TRAFFIC BARRIER TERMINAL, TYPE 1 (SPECIAL) TANGENT	63100169 TRAFFIC BARRIER TERMINAL, TYPE 1 (SPECIAL) FLARED	72501000 TERMINAL MARKER - DIRECT APPLIED	X6350204 LINEAR DELINEATOR PANELS, 4 INCH	Z0001002 GUARDRAIL AGGREGATE EROSION CONTROL
BEGIN STATION	END STATION	SIDE	FOOT	EACH	EACH	EACH	EACH	EACH	TON
McCLUGAGE BRIDGE									
246+76.02	255+37.97	LT	825	1	0	0	0	10	175
246+76.02	249+00.05	RT	162.5	1	1	0	1	0	50
2153+00.00	2168+00.00	LT	0.0	0	0	0	2	4	0
McCLUGAGE BRIDGE (EASTBOUND)									
246+64.23	247+58.76	RT	0	1	0	1	1	0	0
TOTAL			987.5	3	1	1	4	14	225

SIGN SCHEDULE

LOCATION			72000100 SIGN PANEL - TYPE 1	72000300 SIGN PANEL - TYPE 3	72400710 RELOCATE SIGN PANEL - TYPE 1	72900100 METAL POST - TYPE A
STATION	OFFSET	SIGN PANEL	SQ FT	SQ FT	SQ FT	FOOT
McCLUGAGE BRIDGE						
11+39.65	9.96 RT	ADAMS ST. CHILLICOTHE			4	
13+21.59	10.49 RT	W13-3			5	
201+42.23	17.50' LT	SGN-TR-01-P		211		
201+42.23	0.00' CT	SGN-TR-02-P		136		
201+94.56	30.38 LT	M3-4P			2	
		M1-4			5	
		M6-2P			2	
		M4-5P			2	
		M1-5			4	
		M6-2P			2	
213+00.40	27.00 LT	R2-1			12	
230+35.35	17.50' LT	SGN-DR-03-P		182		
230+35.35	0.00' CT	SGN-BR-04-P		84		
247+00.00	26.00' LT	R2-1	12			17
249+42.00	15.50' LT	SGN-TR-05-P		211		
253+52.28	28.90 LT	MCCLUGGAGE BRIDGE			6	
		ILLINOIS RIVER			5	
		WATER SUPLY PROTECTION AREA			4	
		REPORT SPILLS			2	
TOTAL			12	824	55	17

MEDIAN BARRIER SCHEDULE

LOCATION			42001300 PROTECTIVE COAT	63700380 CONCRETE BARRIER, VARIABLE CROSS SECTION 44 INCH HEIGHT	64300770 IMPACT ATTENUATORS (SEVERE USE, NARROW), TEST LEVEL 3	X6370048 CONCRETE BARRIER BASE (SPECIAL)
BEGIN STATION	END STATION	SIDE	SQ YD	FOOT	EACH	FOOT
McCLUGAGE BRIDGE						
708+30.16	711+69.18	RT	316	309	1	
711+69.18	718+58.46	RT	720	491		491
FROM PAVEMENT AND SHOULDER SCHEDULE			642			
TOTAL			1,678	800	1	491

SIGN REMOVAL

LOCATION		72400330 REMOVE SIGN PANEL - TYPE 3	73500020 REMOVE OVERHEAD SIGN STRUCTURE - MONOTUBE	73602000 REMOVE OVERHEAD SIGN STRUCTURE - BRIDGE MOUNTED	73700100 REMOVE GROUND MOUNTED SIGN SUPPORT
STATION	OFFSET	SQ FT	EACH	EACH	EACH
McCLUGAGE BRIDGE					
206+00.00	0.00' LT	346	1		
213+00.00	0.00' LT	181	1		
230+35.35	0.00' LT	181		1	
249+50.26	39.10' LT	210			1
TOTAL		918	2	1	1

TEMPORARY BARRIER RELOCATION

LOCATION			70400200 RELOCATE TEMPORARY CONCRETE BARRIER	70600370 IMPACT ATTENUATORS, RELOCATE (SEVERE USE, NARROW), TEST LEVEL 3
STATION	STATAION	OFFSET	FOOT	EACH
McCLUGAGE BRIDGE				
250+45.00	253+03.00	RT	228	1
TOTAL			228	1

FENCE REMOVAL AND REINSTALLATION SCHEDULE

LOCATION		X6640108 FENCE REMOVAL AND REINSTALLATION
STATION	OFFSET	FOOT
McCLUGAGE BRIDGE		
716+81.25	RT	15
TOTAL		15

HANSON
Hanson Professional Services Inc.

LAYOUT	RLA	10/31/2023
DRAWN	CM/RLA	1/13/2025
REVIEWED	MGD	1/14/2025

MODEL: Default
FILE NAME: I:\2020\68\2020049\CADD\CAD_Sheets\Sht-schedule01.dgn

USER NAME = Ander00846	DESIGNED - RLA	REVISED -	STATE OF ILLINOIS DEPARTMENT OF TRANSPORTATION
	DRAWN - CM/RLA	REVISED -	
PLOT SCALE = 10.00 ' / in.	CHECKED - MGD	REVISED -	
PLOT DATE = 2/13/2025	DATE - 1/14/2025	REVISED -	

WESTBOUND US 150 McCLUGAGE BRIDGE
SCHEDULE OF QUANTITIES

SCALE: N/A | SHEET OF SHEETS | STA. TO STA.

F.A.P. RTE.	SECTION	COUNTY	TOTAL SHEETS	SHEET NO.
317A	(15B-1)BP, BRR:(14HB-1)BRR	PEORIA/TAZWELL	418	21

CONTRACT NO. 68E44

ILLINOIS FED. AID PROJECT

DRAINAGE SCHEDULE

LOCATION	50105220 PIPE CULVERT REMOVAL (FOOT)	5422C012 PIPE CULVERTS, CLASS C, TYPE 2 12" (TEMPORARY) (FOOT)	54262712 METAL FLARED END SECTIONS 12" (EACH)	550A0340 STORM SEWERS, CLASS A, TYPE 2 12" (FOOT)	55100500 STORM SEWER REMOVAL 12" (FOOT)	60100060 CONCRETE HEADWALLS FOR PIPE DRAINS (EACH)	60100945 PIPE DRAINS 12" (FOOT)	60237420 INLETS, TYPE A, TYPE 20 FRAME AND GRATE (EACH)	60240324 INLETS, TYPE B, TYPE 20 FRAME AND GRATE (EACH)	60250200 CATCH BASINS TO BE ADJUSTED (EACH)	60260100 INLETS TO BE ADJUSTED (EACH)	60500040 REMOVING MANHOLES (EACH)	60500060 REMOVING INLETS (EACH)	61000050 CONCRETE THRUST BLOCKS (EACH)	61000335 TYPE G INLET BOX, STANDARD 610001 (EACH)	X0322938 TEMPORARY END SECTION (EACH)	X0325734 SLOTTED DRAIN REMOVAL (FOOT)	X5427602 REMOVE EXISTING FLARED END SECTION (EACH)	X5510011 PROPOSED STORM SEWER CONNECTION TO EXISTING MANHOLE (EACH)	X6010003 PIPE DRAIN REMOVAL (FOOT)	X6024875 TEMPORARY INLET (EACH)	20800150 TRENCH BACKFILL (CU YD)
McCLUGAGE BRIDGE																						
708+00.00 TO 208+00.00	256	241	0	53	52	2	0	1	1	2	8	1	2	0	0	1	244	0	3	0	1	10
246+00.00 TO 252+30.21	0	0	1	0	0	0	8	0	0	0	0	0	0	1	1	0	0	1	0	8	0	0
TOTALS	256	241	1	53	52	2	8	1	1	2	8	1	2	1	1	1	244	1	3	8	1	10

TEMPORARY BARRIER SCHEDULE

LOCATION	70400100 TEMPORARY CONCRETE BARRIER (SQ FT)	70400125 PINNING TEMPORARY CONCRETE BARRIER (FOOT)	70400200 RELOCATE TEMPORARY CONCRETE BARRIER (FOOT)	70500100 TEMPORARY STEEL PLATE BEAM GUARDRAIL, TYPE A (FOOT)	70500615 TEMPORARY TRAFFIC BARRIER TERMINAL, TYPE 1 (FOOT)	70500665 TEMPORARY TRAFFIC BARRIER TERMINAL, TYPE 6 (FOOT)	70600255 IMPACT ATTENUATORS, TEMPORARY (FULLY REDIRECTIVE, NARROW), TEST LEVEL 2 (FOOT)	70600260 IMPACT ATTENUATORS, TEMPORARY (FULLY REDIRECTIVE, NARROW), TEST LEVEL 3	70600322 IMPACT ATTENUATORS, RELOCATE (FULLY REDIRECTIVE, NARROW), TEST LEVEL 2	70600332 IMPACT ATTENUATORS, RELOCATE (FULLY REDIRECTIVE, NARROW), TEST LEVEL 3
McCLUGAGE BRIDGE										
PRE-STAGE										
712+42.00 TO 719+92.00	525.0	168	0	0	0	0	0	3	0	0
US 150 STAGE 1A/1B										
2090+00.00 TO 2093+00.00	0	0	0	0	0	0	0	0	0	0
2093+00.00 TO 2108+00.00	950.0	44	512.5	0	0	0	0	0	0	1
2108+00.00 TO 2123+00.00	1500.0	0	0	0	0	0	0	0	0	0
2123+00.00 TO 2138+00.00	1500.0	0	0	0	0	0	0	0	0	0
2138+00.00 TO 2153+00.00	1500.0	0	0	0	0	0	0	0	0	0
2153+00.00 TO 2168+00.00	1137.5	0	0	150.0	1	1	0	0	0	1
2168+00.00 TO 2183+00.00	0	0	0	0	0	0	0	0	0	0
IL 29 STAGE 1A										
606+52.60 TO 619+00.00	0	128	400.0	0	0	0	2	0	2	0
619+00.00 TO 632+54.63	0	0	0	0	0	0	0	0	0	0
IL 29 STAGE 1B										
606+52.60 TO 619+00.00	0	132	412.5	0	0	0	0	0	0	0
619+00.00 TO 632+54.63	0	0	0	0	0	0	0	0	0	0
POST-STAGE A										
712+42.00 TO 719+92.00	0	168	525.0	0	0	0	0	0	0	3
POST-STAGE B										
2090+00.00 TO 2102+75.00	0		937.5	0	0	0	0	0	0	1
2102+75.00 TO 207+00.00	0		1137.5	0	0	0	0	0	0	1
207+00.00 TO 222+00.00	0	0	0	0	0	0	0	0	0	0
222+00.00 TO 237+00.00	0	0	0	0	0	0	0	0	0	0
BRIDGE PAINTING	0	260	812.5	0	0	0	0	0	4	0
WINTER SHUTDOWN	0	0	800.0	0	0	0	0	0	0	1
TOTALS	7112.5	900	5537.5	150.0	1	1	2	3	6	8

PERMANENT PAVEMENT MARKING SCHEDULE

LOCATION	78003101 PREFORMED PLASTIC PAVEMENT MARKING, TYPE B - STANDARD - LETTERS AND SYMBOLS (SQ FT)	78003111 PREFORMED PLASTIC PAVEMENT MARKING, TYPE B - STANDARD - LINE 4" (FOOT)	78003131 PREFORMED PLASTIC PAVEMENT MARKING, TYPE B - STANDARD - LINE 6" (FOOT)	78003141 PREFORMED PLASTIC PAVEMENT MARKING, TYPE B - STANDARD - LINE 8" (FOOT)	78003151 PREFORMED PLASTIC PAVEMENT MARKING, TYPE B - STANDARD - LINE 12" (FOOT)	78009000 MODIFIED URETHANE PAVEMENT MARKING - LETTERS AND SYMBOLS (SQ FT)	78009004 MODIFIED URETHANE PAVEMENT MARKING - LINE 4" (FOOT)	78009006 MODIFIED URETHANE PAVEMENT MARKING - LINE 6" (FOOT)	78009008 MODIFIED URETHANE PAVEMENT MARKING - LINE 8" (FOOT)	78009012 MODIFIED URETHANE PAVEMENT MARKING - LINE 12" (FOOT)	78009024 MODIFIED URETHANE PAVEMENT MARKING - LINE 24" (FOOT)	78011025 GROOVING FOR RECESSED PAVEMENT MARKING 5" (FOOT)	78011035 GROOVING FOR RECESSED PAVEMENT MARKING 7" (FOOT)	78011045 GROOVING FOR RECESSED PAVEMENT MARKING 9" (FOOT)	78011065 GROOVING FOR RECESSED PAVEMENT MARKING 13" (FOOT)	78011125 GROOVING FOR RECESSED PAVEMENT MARKING 25" (FOOT)	78100100 RAISED REFLECTIVE PAVEMENT MARKER (EACH)	78300200 RAISED REFLECTIVE PAVEMENT MARKER REMOVAL (EACH)	78300202 PAVEMENT MARKING REMOVAL - WATER BLASTING (SQ FT)
McCLUGAGE BRIDGE																			
2090+00.00 TO 2093+00.00	0	0	0	0	0	0	0	1730	0	345	0	0	1730	0	345	0	0	0	1210
2093+00.00 TO 2108+00.00	63	1767	1750	2957	900	0	1334	355	0	0	0	3100	2105	2957	900	0	6	6	5021
2108+00.00 TO 2123+00.00	0	0	6181	3255	1424	0	0	0	0	0	0	0	6181	3255	1424	0	0	0	6685
2123+00.00 TO 2138+00.00	0	0	6000	1650	400	0	0	0	0	0	0	0	6000	1650	400	0	0	0	4500
2138+00.00 TO 2153+00.00	0	0	6000	1500	285	0	0	0	0	0	0	0	6000	1500	285	0	0	0	4285
2153+00.00 TO 2168+00.00	0	0	1900	475	85	0	0	3441	1396	253	0	0	5341	1871	338	0	14	14	4256
2168+00.00 TO 2183+00.00	0	0	0	0	0	0	1050	6665	118	251	0	1050	6665	118	251	0	0	0	4012
606+52.60 TO 619+00.00	0	0	0	0	0	31	2065	346	392	157	0	2065	346	392	157	0	0	0	1311
619+00.00 TO 632+54.63	0	0	0	0	0	125	2210	177	774	62	90	2210	177	774	62	90	0	0	1709
TOTALS	63	1767	21831	9837	3094	156	6659	12714	2680	1068	90	8425	34545	12517	4162	90	20	20	32988

TEMPORARY PAVEMENT MARKING SCHEDULE

LOCATION			70307100 TEMPORARY PAVEMENT MARKING LETTERS AND SYMBOLS-TYPE IV TAPE	70307120 TEMPORARY PAVEMENT MARKING-LINE 4"-TYPE IV TAPE	70307140 TEMPORARY PAVEMENT MARKING-LINE 8"-TYPE IV TAPE	70307160 TEMPORARY PAVEMENT MARKING-LINE 12"-TYPE IV TAPE	70307210 TEMPORARY PAVEMENT MARKING-LINE 24"-TYPE IV TAPE	78100300 REPLACEMENT REFLECTOR	X7830050 RAISED REFLECTIVE PAVEMENT MARKER, REFLECTOR REMOVAL
			SQ FT	FOOT	FOOT	FOOT	FOOT	EACH	EACH
McCLUGAGE BRIDGE									
PRE-STAGE									
712+42.00	TO	719+92.00	0	2262	234	0	16	0	585
US 150 STAGE 1A/1B									
2090+00.00	TO	2093+00.00	0	1006	274	0	0	0	0
2093+00.00	TO	2108+00.00	0	6927	3097	1052	30	0	0
2108+00.00	TO	2123+00.00	0	5962	1165	350	0	0	0
2123+00.00	TO	2138+00.00	0	5962	0	0	0	0	0
2138+00.00	TO	2153+00.00	0	5962	0	0	0	0	0
2153+00.00	TO	2168+00.00	0	6927	718	0	0	0	0
2168+00.00	TO	2183+00.00	0	1023	197	179	0	0	0
IL 29 STAGE 1A									
606+52.60	TO	619+00.00	0	1264	0	0	0	0	0
619+00.00	TO	632+54.63	105	1244	411	129	87	0	0
IL 29 STAGE 1B									
606+52.60	TO	619+00.00	0	1485	0	0	0	44	0
619+00.00	TO	632+54.63	152	1198	0	0	75	72	0
POST-STAGE A									
712+42.00	TO	719+92.00	0	1945	1079	301	16	0	0
POST-STAGE B									
2090+00.00	TO	2102+75.00	63	2747	704	85	0	109	0
2102+75.00	TO	207+00.00	0	2257	2318	428	17	110	0
207+00.00	TO	222+00.00	0	1785	0	0	0	0	0
222+00.00	TO	237+00.00	0	1615	0	0	0	0	0
2153+00.00	to	2183+00.00	0	0	0	0	0	250	0
BRIDGE PAINTING			257	5191	411	129	162	0	0
WINTER SHUTDOWN			218	42968	12516	4161	89	0	0
TOTALS			795	99730	23124	6814	492	585	585

PAVEMENT AND SHOULDER SCHEDULE

LOCATION			48101500 AGGREGATE SHOULDERS, TYPE B 6"	Z0062456 TEMPORARY PAVEMENT	44000500 COMBINATION CURB AND GUTTER REMOVAL	60605100 COMBINATION CONCRETE CURB AND GUTTER, TYPE B-6.24 (ABUTTING EXISTING PAVEMENT)	X6061460 PAVED DITCH (SPECIAL)	44004000 PAVED DITCH REMOVAL
			SQ YD	SQ YD	FOOT	FOOT	FOOT	FOOT
McCLUGAGE BRIDGE								
100+00.00	TO	104+35.00	32	642	110	110	34	34
TOTALS			32	642	110	110	34	34

EROSION CONTROL SCHEDULE

LOCATION			20100500 TREE REMOVAL, ACRES	20101000 TEMPORARY FENCE	25000210 SEEDING, CLASS 2A	25000750 MOWING	20101400 NITROGEN FERTILIZER NUTRIENT	20101500 PHOSPHORUS FERTILIZER NUTRIENT	20101600 POTASSIUM FERTILIZER NUTRIENT	25100115 MULCH, METHOD 2	25100635 HEAVY DUTY EROSION CONTROL BLANKET	28000250 TEMPORARY EROSION CONTROL SEEDING	28000305 TEMPORARY DITCH CHECKS	28000400 PERIMETER EROSION BARRIER	28000500 INLET AND PIPE PROTECTION	28000510 INLET FILTERS	21101615 TOPSOIL FURNISH AND PLACE, 4"	21400100 GRADING AND SHAPING DITCHES
			ACRE	FOOT	ACRE	ACRE	POUND	POUND	POUND	ACRE	SQ YD	POUND	FOOT	FOOT	EACH	EACH	SQ YD	FOOT
McCLUGAGE BRIDGE																		
TEMPORARY CONDITION																		
START	TO	208+00.00	0.05	1170	0.00	0.00	0	0	0	0.11	0	24	95	0	23	23	1654	382
245+00.00	TO	END	0.20	417	0.00	0.00	0	0	0	0.00	0	0	0	0	2	2	0	0
PERMANENT CONDITION																		
START	TO	208+00.00	0.00	0	0.50	2.50	45	45	45	0.46	0	0	0	0	0	0	2221	0
245+00.00	TO	END	0.00	0	0.50	2.50	45	45	45	0.09	1375	0	0	1402	0	0	1807	0
TOTALS			0.25	1587	1.00	5.00	90	90	90	1.00	1375	24	95	1402	25	25	5682	382

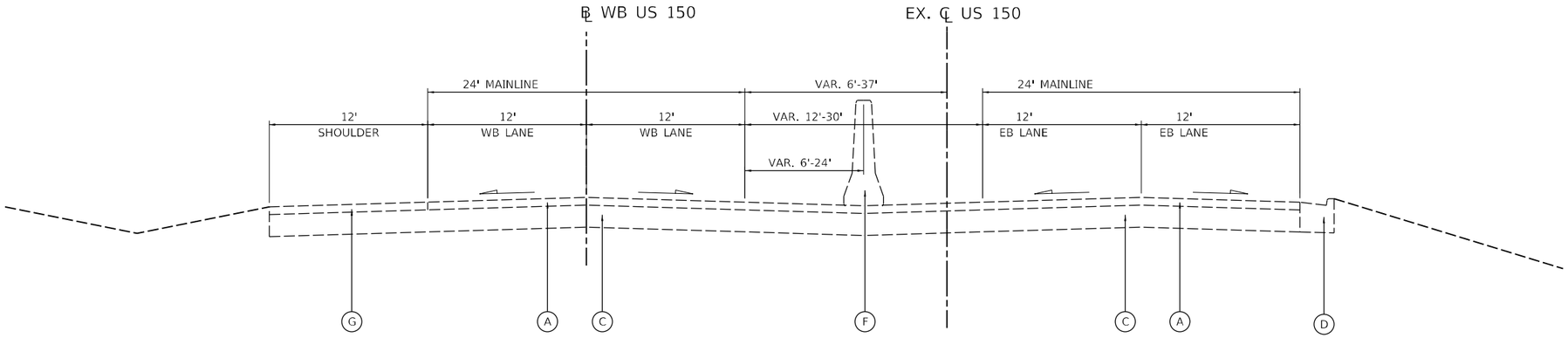

EXISTING TYPICAL SECTION

STA. 715+54.86 TO STA. 716+70.85

EXISTING LEGEND

- (A) HMA PAVEMENT, 4.25" TO 4.75" (ESTIMATED SURFACE THICKNESS, BASED ON OLD PLANS)
- (B) PCC PAVEMENT, 9.5"±
- (C) PCC BASE COURSE, 10"±
- (D) PCC CURB & GUTTER, TYPE B-6.24
- (E) AGGREGATE SHOULDER
- (F) CONCRETE BARRIER
- (G) PAVED SHOULDER
- (H) GUARDRAIL

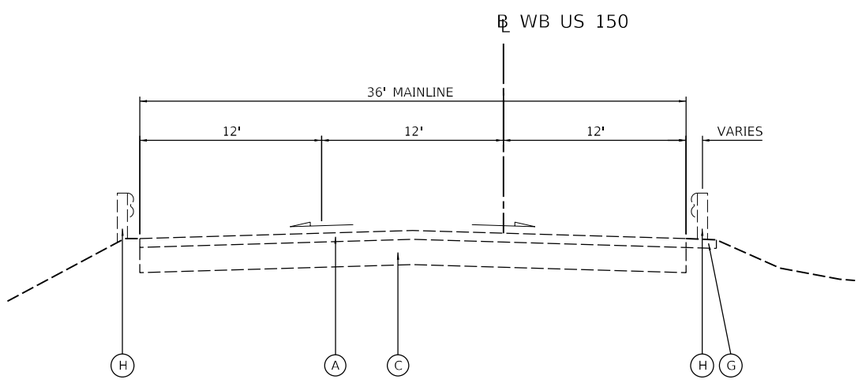

EXISTING TYPICAL SECTION

STA. 246+46.02 TO STA. 248+76.83 (RT)

STA. 246+46.02 TO STA. 254+60.38 (LT)

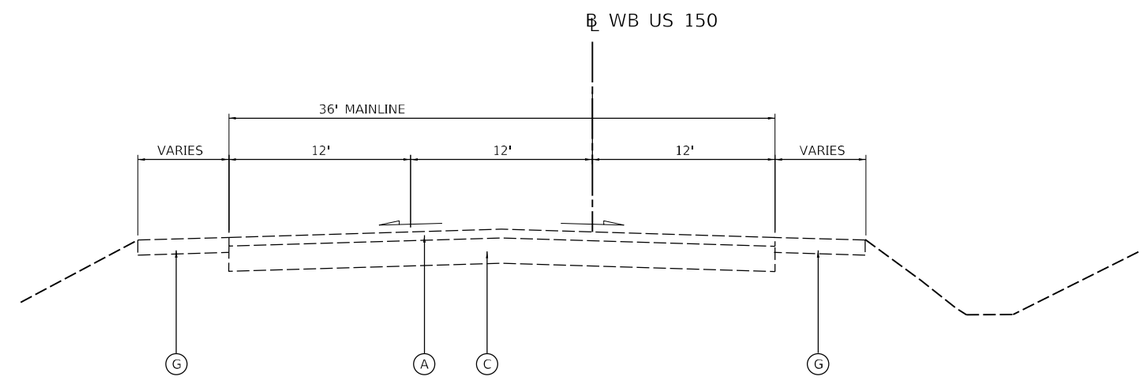

EXISTING TYPICAL SECTION

STA. 248+76.83 TO STA. 256+12.34 (RT)

STA. 254+60.38 TO STA. 256+12.34 (LT)

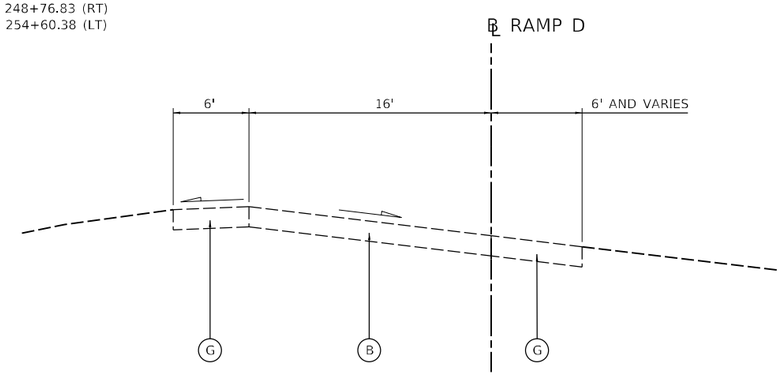

EXISTING TYPICAL SECTION

STA. 14+75.79 TO STA. 15+42.44

HANSON
Hanson Professional Services Inc.

LAYOUT	RLA	10/31/2023
DRAWN	CM/RLA	1/13/2025
REVIEWED	MGD	1/14/2025

MODEL: Default
FILE NAME: I:\2020ps\204H049\CADCAD-Sheets\sht-typic-01.dgn

USER NAME = Ander00846	DESIGNED - RLA	REVISED -	STATE OF ILLINOIS DEPARTMENT OF TRANSPORTATION
	DRAWN - CM/RLA	REVISED -	
PLOT SCALE = 10.00 ' / in.	CHECKED - MGD	REVISED -	
PLOT DATE = 2/13/2025	DATE - 1/14/2025	REVISED -	

WESTBOUND US 150 McCLUGAGE BRIDGE
EXISTING TYPICAL SECTIONS

SCALE: N/A | SHEET OF SHEETS | STA. TO STA.

F.A.P. RTE.	SECTION	COUNTY	TOTAL SHEETS	SHEET NO.
317A	(15B-1)BP, BRR:(14HB-1)BRR	PEORIA/TAZWELL	418	24

CONTRACT NO. 68E44

ILLINOIS FED. AID PROJECT

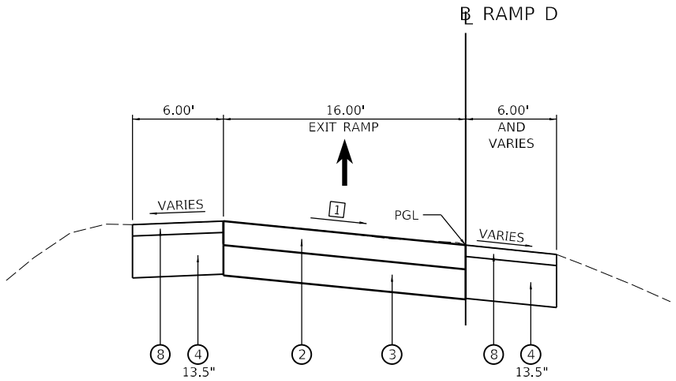

PROPOSED TYPICAL SECTION

STA. 14+75.58 to 15+42.44

1 CROSS SLOPE TRANSITION
*STA. 13+90.00 TO STA. 14+75.58 = TRANSITION FROM +2.00% TO +3.94%
^TRANSITION OCCURS ON THE PROPOSED STRUCTURE, SEE BRIDGE PLANS.
STA. 14+75.58 TO STA. 15+00.00 = TRANSITION FROM +3.94% TO +5.18%
STA. 15+00.00 TO STA. 15+42.44 = TRANSITION FROM +5.18% TO +7.66%

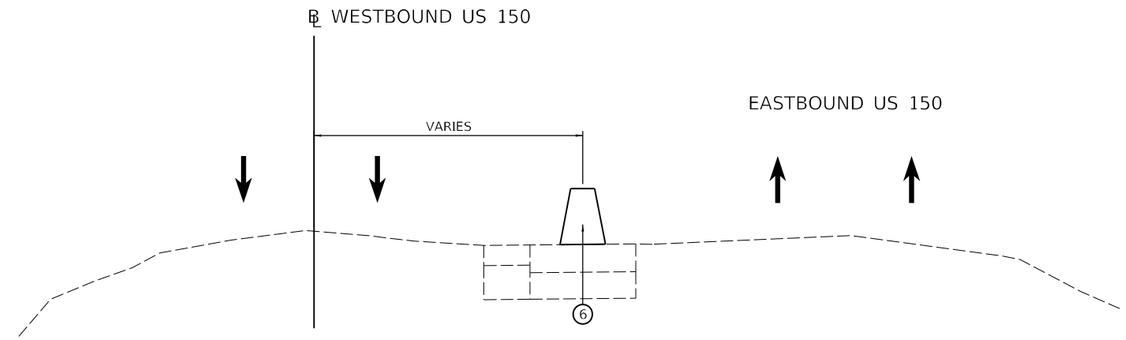

PROPOSED TYPICAL SECTION

STA. 708+60.32 to 711+69.09

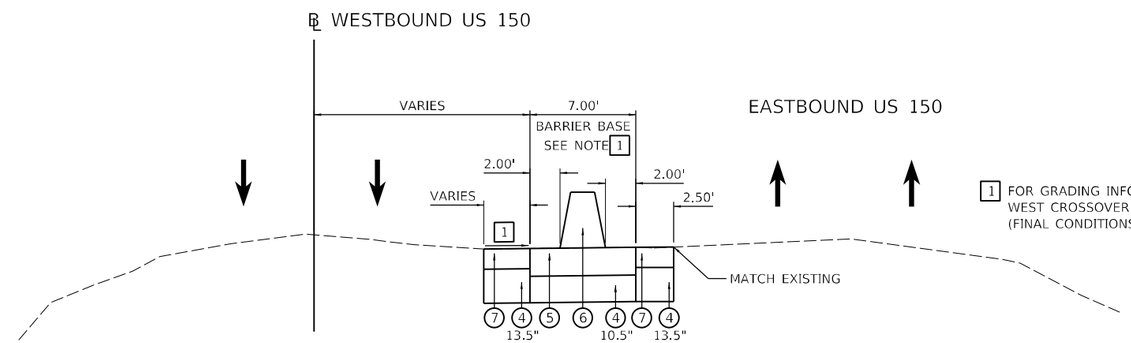

1 FOR GRADING INFORMATION SEE WEST CROSSOVER CROSS SECTIONS (FINAL CONDITIONS) PLAN SHEETS.

PROPOSED TYPICAL SECTION

STA. 711+69.09 to 715+54.86

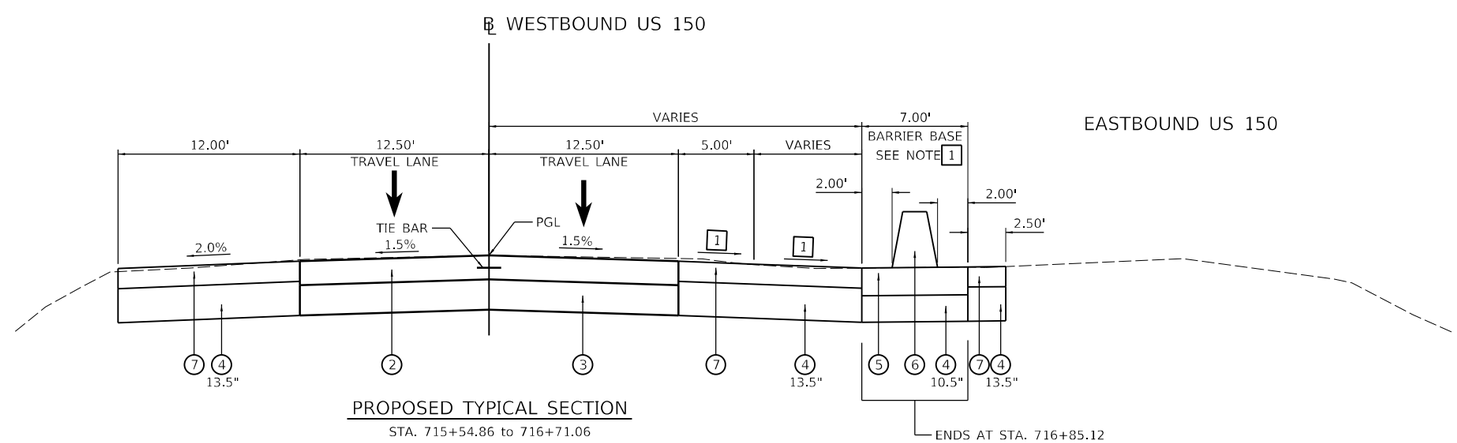

PROPOSED TYPICAL SECTION

STA. 715+54.86 to 716+71.06

US 150 BRIDGE OMISSION
STA 716+71.06 TO STA 246+76.02

PROPOSED LEGEND

1. POLYMERIZED HMA SURFACE COURSE, IL-9.5, MIX "E", N70, 2"
   POLYMERIZED HMA BINDER COURSE, IL-9.5, N70, VARIABLE DEPTH - 1.5" MIN.
2. PCC PAVEMENT, 9 1/2" (JOINTED)
3. AGGREGATE SUBGRADE IMPROVEMENT (12")
4. AGGREGATE SUBGRADE IMPROVEMENT (VARIABLE DEPTH)
5. CONCRETE BARRIER BASE (SPECIAL)
6. CONCRETE BARRIER, VARIABLE CROSS-SECTION, 44-INCH HEIGHT
7. HMA SHOULDERS, 8"
8. PCC SHOULDERS, 8"
9. STEEL PLATE BEAM GUARDRAIL AND TERMINALS
10. GUARDRAIL AGGREGATE EROSION CONTROL
11. HMA SURFACE REMOVAL, VARIABLE DEPTH
12. TOPSOIL FURNISH AND PLACE, 4"
13. SEEDING, CLASS 3A

HANSON
Hanson Professional Services Inc.

LAYOUT	RLA	10/31/2023
DRAWN	CM/RLA	1/13/2025
REVIEWED	MGD	1/14/2025

MODEL: Default
FILE NAME: I:\20Jobs\20H0049\CADD\CAD_Sheets\sh-typic-ff02.dgn

USER NAME = Ander00846	DESIGNED - RLA	REVISED -	STATE OF ILLINOIS DEPARTMENT OF TRANSPORTATION
	DRAWN - CM/RLA	REVISED -	
PLOT SCALE = 10.00 ' / in.	CHECKED - MGD	REVISED -	
PLOT DATE = 2/13/2025	DATE - 1/14/2025	REVISED -	

WESTBOUND US 150 McCLUGAGE BRIDGE
PROPOSED TYPICAL SECTIONS

SCALE: N/A | SHEET OF SHEETS | STA. TO STA.

F.A.P. RTE.	SECTION	COUNTY	TOTAL SHEETS	SHEET NO.
317A	(15B-1)BP, BRR:(14HB-1)BRR	PEORIA/TAZWELL	418	25
		CONTRACT NO. 68E44		
		ILLINOIS	FED. AID PROJECT	

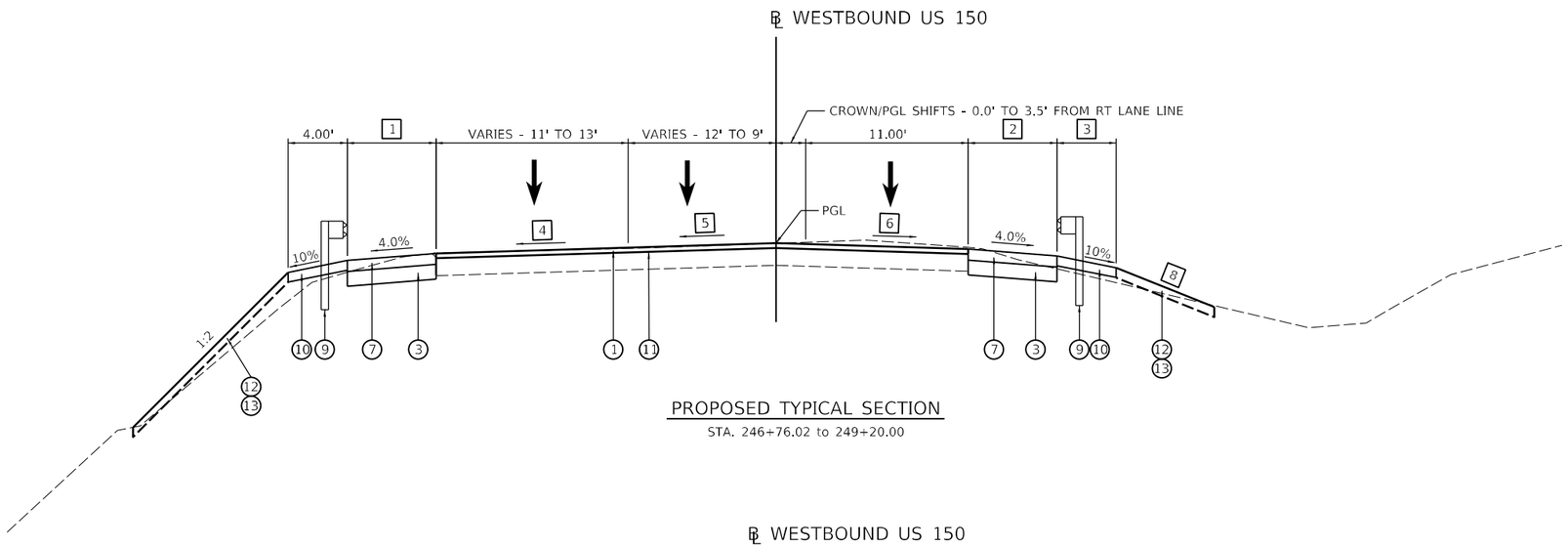

PROPOSED TYPICAL SECTION

STA. 246+76.02 to 249+20.00

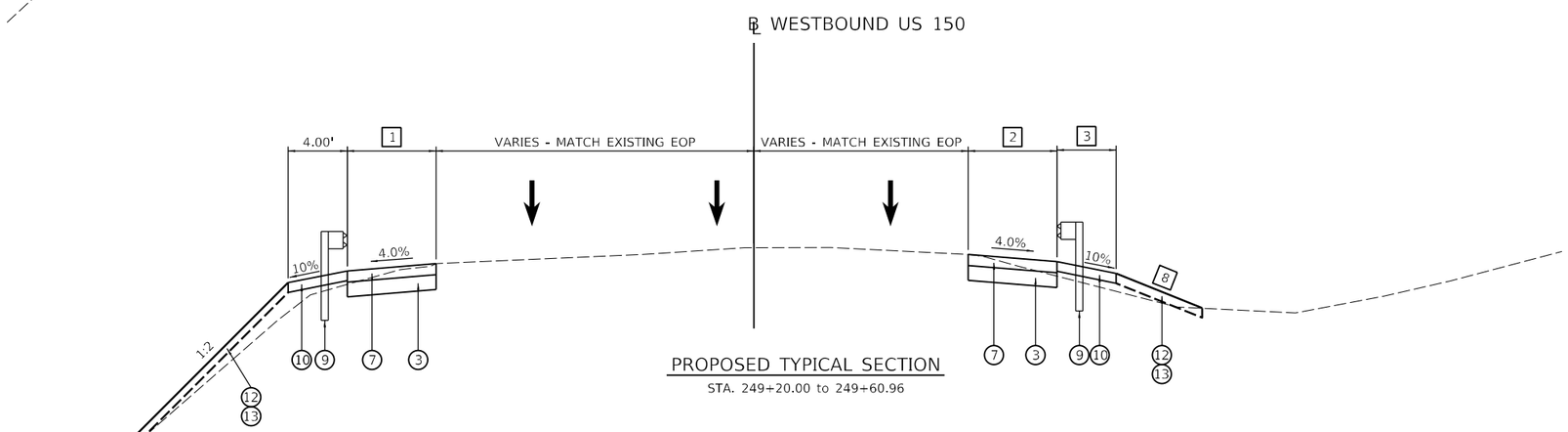

PROPOSED TYPICAL SECTION

STA. 249+20.00 to 249+60.96

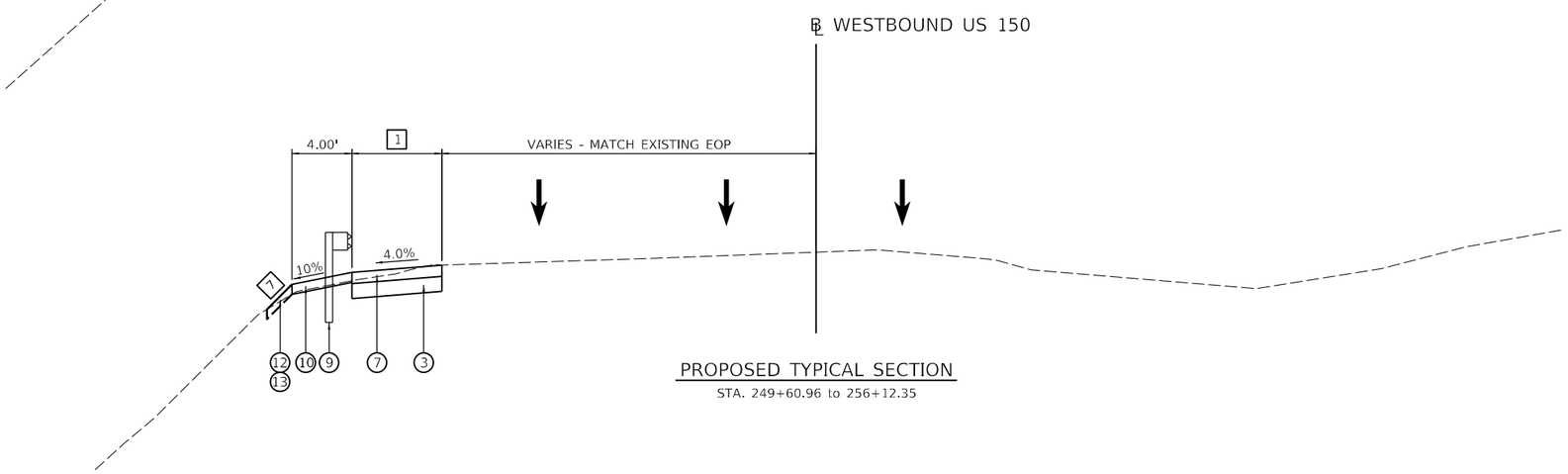

PROPOSED TYPICAL SECTION

STA. 249+60.96 to 256+12.35

PROPOSED LEGEND

1. POLYMERIZED HMA SURFACE COURSE, IL-9.5, MIX "E", N70, 2"
   POLYMERIZED HMA BINDER COURSE, IL-9.5, N70, VARIABLE DEPTH - 1.5" MIN.
2. PCC PAVEMENT, 9 1/2" (JOINTED)
3. AGGREGATE SUBGRADE IMPROVEMENT (12")
4. AGGREGATE SUBGRADE IMPROVEMENT (VARIABLE DEPTH)
5. CONCRETE BARRIER BASE (SPECIAL)
6. CONCRETE BARRIER, VARIABLE CROSS-SECTION, 44-INCH HEIGHT
7. HMA SHOULDERS, 8"
8. PCC SHOULDERS, 8"
9. STEEL PLATE BEAM GUARDRAIL AND TERMINALS
10. GUARDRAIL AGGREGATE EROSION CONTROL
11. HMA SURFACE REMOVAL, VARIABLE DEPTH
12. TOPSOIL FURNISH AND PLACE, 4"
13. SEEDING, CLASS 3A

NOTES:

1. FOR AREAS STEEPER THAN 1:3 ALONG THE LEFT EMBANKMENT SLOPE SEE DISTRICT STANDARD DETAIL 205001-D4 FOR SLOPE STEPS.

1 HMA SHOULDER WIDTH - LEFT
246+76.02 TO 247+08.76 = 0.00'
247+08.76 TO 248+58.38 = TRANSITION FROM 0.00' TO 6.00'
248+58.38 TO 249+00.00 = 6.00'
249+00.00 TO 249+50.00 = TRANSITION FROM 6.00' TO 8.00'
249+50.00 TO 253+50.00 = 8.00'
253+50.00 TO 254+00.00 = TRANSITION FROM 8.00' TO 6.00'
254+00.00 TO 256+12.35 = 6.00'

2 HMA SHOULDER WIDTH - RIGHT
246+76.02 TO 247+12.67 = 3.28'
247+12.67 TO 248+51.88 = TRANSTION FROM 3.28' TO 6.00'
248+51.88 TO 249+61.16 = 6.00'

3 GUARDRAIL AGGREGATE EROSION CONTROL - RIGHT
246+76.02 TO 249+10.31 = 4.00'
249+10.31 TO 249+34.33 = TRANSITION FROM 4.00' TO 0.00'
249+34.33 TO 249+61.16 = 0.00'

4 CROSS SLOPE TRANSITION - FAR LEFT
246+76.02 TO 247+00.00 = TRANSITION FROM -2.00% TO -1.50%
249+00.00 TO 248+90.00 = -1.50%
248+90.00 TO 249+20.00 = TRANSITION FROM -1.50% TO MATCH EXISTING (APPROX -1.40%)

5 CROSS SLOPE TRANSITION - NEAR LEFT
246+76.02 TO 248+90.00 = -1.50%
249+90.00 TO 249+20.00 = TRANSITION FROM -1.50% TO MATCH EXISTING (APPROX. -0.90%)

6 CROSS SLOPE TRANSITION - RIGHT
246+76.02 TO 248+90.00 = -1.50%
248+90.00 TO 249+20.00 = TRANSITION FROM -1.50% TO MATCH EXISTING (APPROX. -2.30%)

7 FILL SLOPE - LEFT
249+60.96 TO 251+50.00 = 1:2
251+50.00 TO 252+00.00 = TRANSITION FROM 1:2 TO 1:3
252+00.00 TO 253+75.00 = 1:3
253+75.00 TO 254+00.00 = TRANSITION FROM 1:3 TO 10%
254+00.00 TO 256+12.35 = 10%

8 FILL SLOPE - RIGHT
246+76.02 TO 247+00.00 = TRANSITION FROM -10% TO -20%
247+00.00 TO 248+00.00 = -20%
248+00.00 TO 248+25.00 = TRANSITION FROM -20% TO -6%
248+25.00 TO 248+50.00 = -6%
248+50.00 TO 248+60.00 = TRANSITION FROM -6% TO -8%
248+60.00 TO 248+75.00 = -8%
248+75.00 TO 248+90.00 = TRANSITION FROM -8% TO -5%
248+90.00 TO 249+00.00 = TRANSITION FROM -7% TO -20%
249+00.00 TO 249+25.00 = -20%
249+25.00 TO 249+50.00 = TRANSITION FROM -20% TO 1:2

HANSON
Hanson Professional Services Inc.

LAYOUT	RLA	10/31/2023
DRAWN	CM/RLA	1/13/2025
REVIEWED	MGD	1/14/2025

MODEL: Default
FILE NAME: I:\2020\s\2040049\CADD\CAD_Sheets\Sht-typical-#03.dgn

USER NAME = Ander00846	DESIGNED - RLA	REVISED -	STATE OF ILLINOIS DEPARTMENT OF TRANSPORTATION
	DRAWN - CM/RLA	REVISED -	
PLOT SCALE = 10.00 ' / in.	CHECKED - MGD	REVISED -	
PLOT DATE = 2/13/2025	DATE - 1/14/2025	REVISED -	

WESTBOUND US 150 McCLUGAGE BRIDGE
PROPOSED TYPICAL SECTIONS

SCALE: N/A | SHEET OF SHEETS | STA. TO STA.

F.A.P. RTE.	SECTION	COUNTY	TOTAL SHEETS	SHEET NO.
317A	(15B-1)BP, BRR;(14HB-1)BRR	PEORIA/TAZWELL	418	26
		CONTRACT NO. 68E44		
	ILLINOIS	FED. AID PROJECT		

EXISTING EB US 150 ℄ ALIGNMENT DATA

P.O.T. STA. = 2090+00.00
N = 1,478,574.44
E = 2,464,431.79

PI STA. = 2091+10.51
N = 1,478,532.75
E = 2,464,534.14
Δ = 1° 08' 45" (RT)

PI STA. = 2093+60.56
N = 1,478,433.80
E = 2,464,763.77
Δ = 1° 08' 45" (LT)

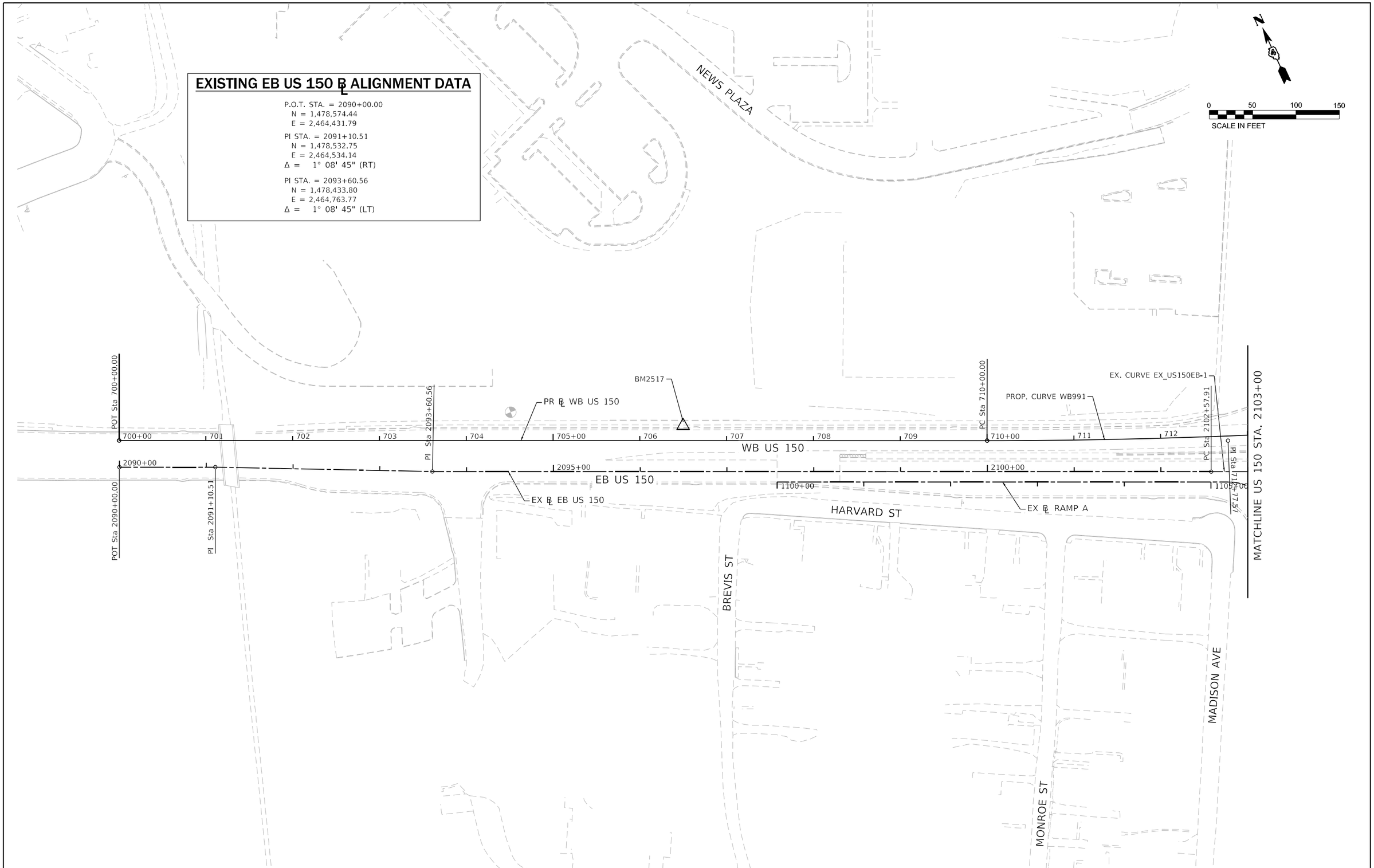

LIN ENGINEERING,LTD. Consulting Engineers Westmont, Illinois	USER NAME = rober	DESIGNED - NH	REVISED -	STATE OF ILLINOIS DEPARTMENT OF TRANSPORTATION	US 150 WESTBOUND McCLUGAGE BRIDGE PROJECT ALIGNMENT - ALIGNMENT PLAN	F.A.P. RTE.	SECTION	COUNTY	TOTAL SHEETS / SHEET NO.
		DRAWN - NH	REVISED -			317	(15B-1)BP,BRR;(24HB-1)BR	PEORIA/TAZEWELL	418 / 27
	PLOT SCALE = 100.0000 ' / in.	CHECKED - ST	REVISED -					CONTRACT NO. 68E44	
	PLOT DATE = 2/12/2025	DATE - 1/2025	REVISED -		SCALE: 1"=50' SHEET 1 OF 8 SHEETS STA. TO STA.		ILLINOIS	FED. AID PROJECT	

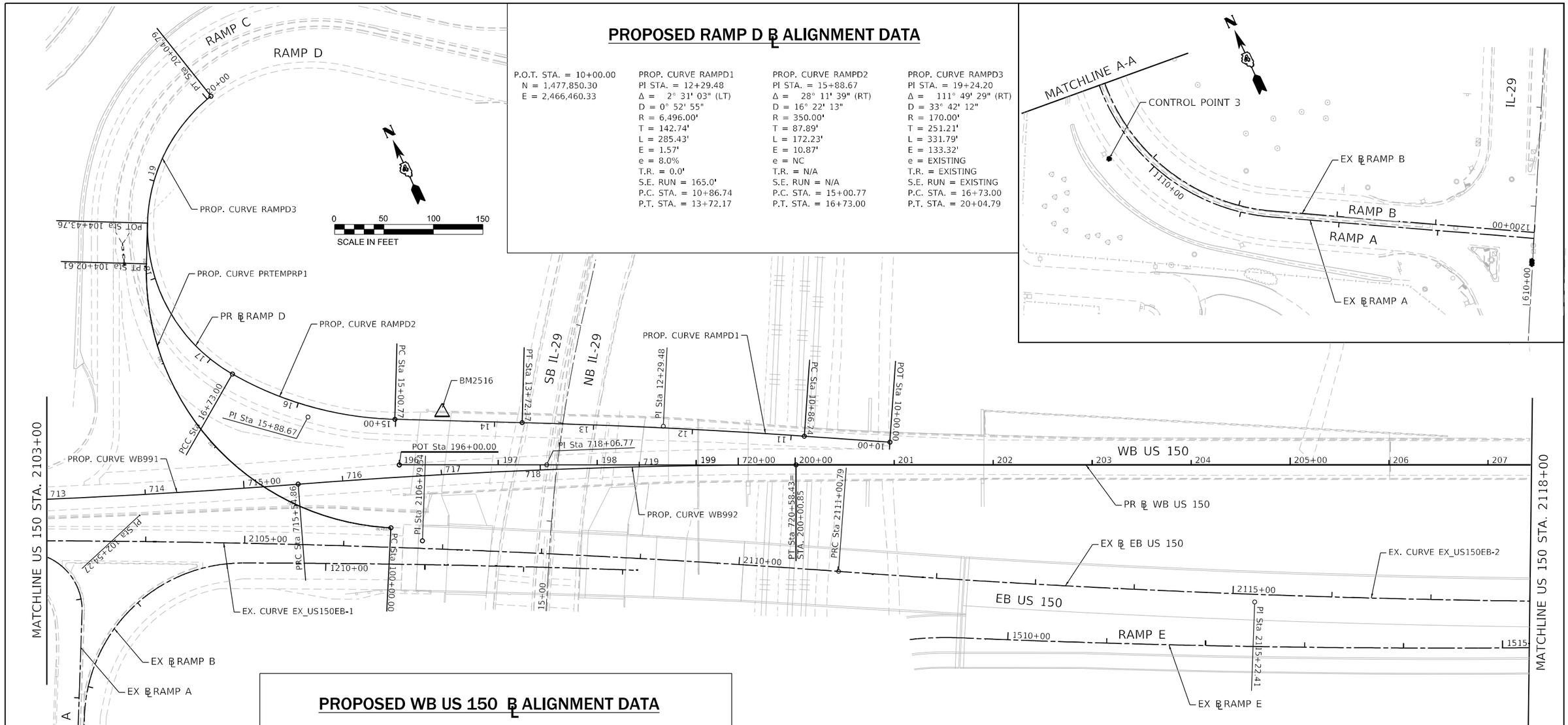

PROPOSED RAMP D ℄ ALIGNMENT DATA

P.O.T. STA. = 10+00.00
N = 1,477,850.30
E = 2,466,460.33

PROP. CURVE RAMPD1
PI STA. = 12+29.48
Δ = 2° 31' 03" (LT)
D = 0° 52' 55"
R = 6,496.00'
T = 142.74'
L = 285.43'
E = 1.57'
e = 8.0%
T.R. = 0.0'
S.E. RUN = 165.0'
P.C. STA. = 10+86.74
P.T. STA. = 13+72.17

PROP. CURVE RAMPD2
PI STA. = 15+88.67
Δ = 28° 11' 39" (RT)
D = 16° 22' 13"
R = 350.00'
T = 87.89'
L = 172.23'
E = 10.87'
e = NC
T.R. = N/A
S.E. RUN = N/A
P.C. STA. = 15+00.77
P.T. STA. = 16+73.00

PROP. CURVE RAMPD3
PI STA. = 19+24.20
Δ = 111° 49' 29" (RT)
D = 33° 42' 12"
R = 170.00'
T = 251.21'
L = 331.79'
E = 133.32'
e = EXISTING
T.R. = EXISTING
S.E. RUN = EXISTING
P.C. STA. = 16+73.00
P.T. STA. = 20+04.79

PROPOSED WB US 150 ℄ ALIGNMENT DATA

P.O.T. STA. = 196+00.00
N = 1,478,016.01
E = 2,465,992.59

PROPOSED TEMPORARY RAMP ℄ ALIGNMENT DATA

PROP. CURVE PRTEMPRP1
PI STA. = 102+54.27
Δ = 88° 43' 20" (RT)
D = 22° 02' 13"
R = 260.00'
T = 254.27'
L = 402.61'
E = 103.66'
e = 6.0%
T.R. = NONE
S.E. RUN = N/A
P.C. STA. = 100+00.00
P.T. STA. = 104+02.61

EXISTING EB US 150 ℄ ALIGNMENT DATA

EX. CURVE EX_US150EB-1
PI STA. = 2106+79.54
N = 1,477,936.17
E = 2,465,985.27
Δ = 4° 11' 58" (RT)
D = 0° 29' 54"
R = 11,500.00'
T = 421.63'
L = 842.88'
E = 7.73'
e = N.C.
T.R. = N/A
S.E. RUN = N/A
P.C. STA. = 2102+57.91
N = 1,478,095.24
E = 2,465,594.80
P.R.C. STA. = 2111+00.79
N = 1,477,748.93
E = 2,466,363.04

EX. CURVE EX_US150EB-2
PI STA. = 2115+22.41
N = 1,477,561.69
E = 2,466,740.81
Δ = 4° 11' 58" (LT)
D = 0° 29' 54"
R = 11,500.00'
T = 421.63'
L = 842.88'
E = 7.73'
e = N.C.
T.R. = N/A
S.E. RUN = N/A
P.R.C. STA. = 2111+00.79
N = 1,477,748.93
E = 2,466,363.04
P.T. STA. = 2119+43.66
N = 1,477,402.62
E = 2,467,131.28

PROPOSED WB US 150 REVERSE CURVE ℄ ALIGNMENT DATA

P.O.T. STA. = 700+00.00
N = 1,478,603.089
E = 2,464,443.02

P.R.C. STA. = 715+54.86
N = 1,478,036.51
E = 2,465,890.57

P.O.T. STA. = 720+58.43
N = 1,477,684.78
E = 2,466,363.82

PROP. CURVE WB991
PI STA. = 712+77.57
Δ = 4° 26' 20" (LT)
D = 0° 48' 00"
R = 7,161.97'
T = 277.57'
L = 554.86'
E = 5.38'
e = NC
T.R. = N/A
S.E. RUN = N/A
P.C. STA. = 710+00.00
P.T. STA. = 715+54.86

PROP. CURVE WB992
PI STA. = 718+06.77
Δ = 4° 26' 20" (RT)
D = 0° 52' 53"
R = 6,500.00'
T = 251.91'
L = 503.57'
E = 4.88'
e = NC
T.R. = N/A
S.E. RUN = N/A
P.C. STA. = 715+54.86
P.T. STA. = 720+58.43

LIN ENGINEERING,LTD. Consulting Engineers Westmont, Illinois	USER NAME = rober	DESIGNED - NH	REVISED -	STATE OF ILLINOIS DEPARTMENT OF TRANSPORTATION	US 150 WESTBOUND McCLUGAGE BRIDGE PROJECT ALIGNMENT - ALIGNMENT PLAN	F.A.P. RTE.	SECTION	COUNTY	TOTAL SHEETS	SHEET NO.
		DRAWN - NH	REVISED -			317	(15B-1)BP.BRR:(24HB-1)BR	PEORIA/TAZEWELL	418	28
	PLOT SCALE = 100.0000 ' / in.	CHECKED - ST	REVISED -					CONTRACT NO. 68E44		
	PLOT DATE = 2/12/2025	DATE - 1/2025	REVISED -		SCALE: 1"=50' SHEET 2 OF 8 SHEETS STA. TO STA.			ILLINOIS FED. AID PROJECT		

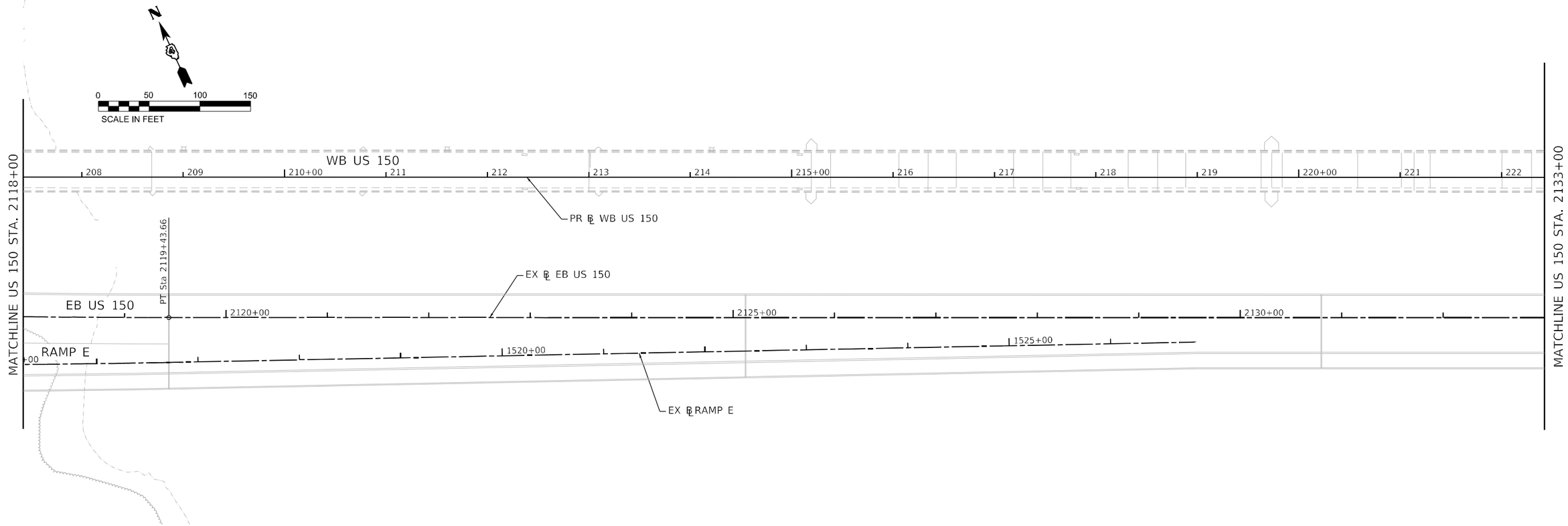

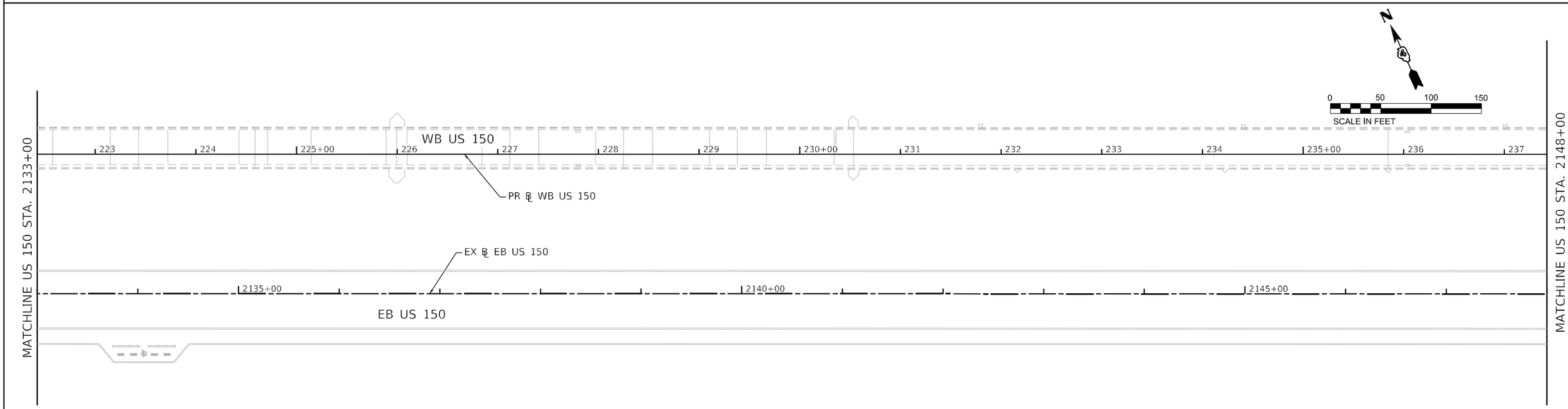

LIN ENGINEERING,LTD. Consulting Engineers Westmont, Illinois	USER NAME = rober	DESIGNED - NH	REVISED -	STATE OF ILLINOIS DEPARTMENT OF TRANSPORTATION	US 150 WESTBOUND McCLUGAGE BRIDGE PROJECT ALIGNMENT - ALIGNMENT PLAN
		DRAWN - NH	REVISED -		
	PLOT SCALE = 100.0000 ' / in.	CHECKED - ST	REVISED -		
	PLOT DATE = 2/12/2025	DATE - 1/2025	REVISED -		SCALE: 1"=50' SHEET 3 OF 8 SHEETS STA. TO STA.

F.A.P. RTE.	SECTION	COUNTY	TOTAL SHEETS	SHEET NO.
317	(15B-1)BP.BRR:(24HB-1)BR	PEORIA/TAZEWELL	418	29
		CONTRACT NO. 68E44		
		ILLINOIS	FED. AID PROJECT	

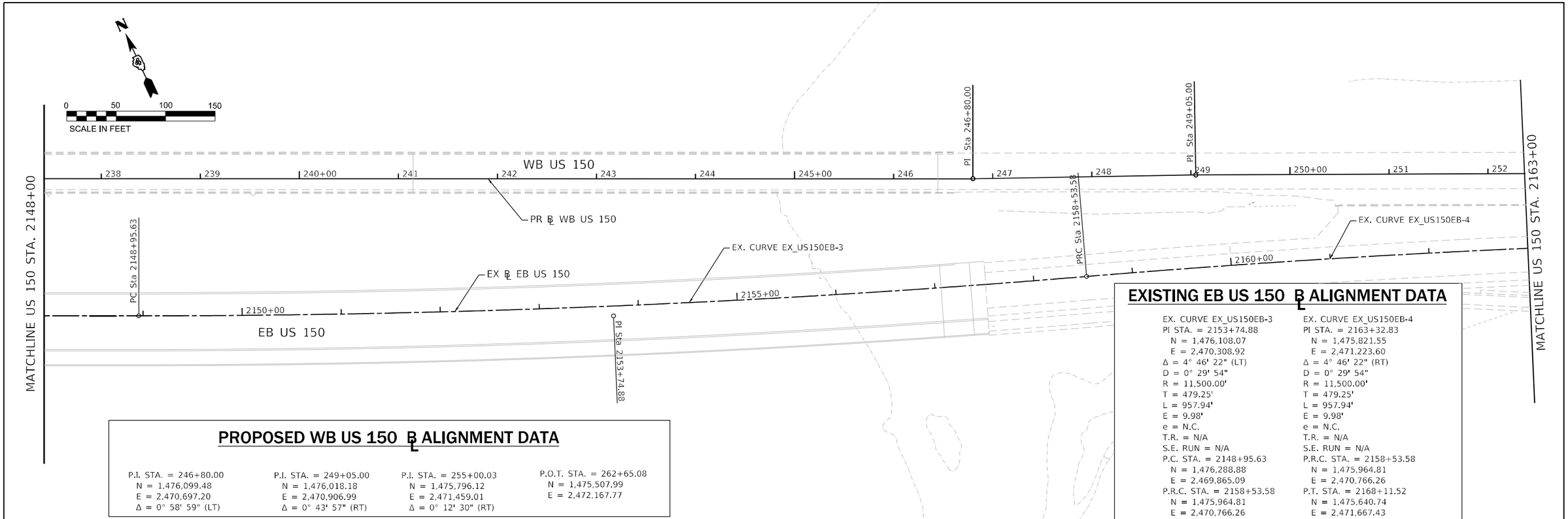

PROPOSED WB US 150 ℄ ALIGNMENT DATA

P.I. STA. = 246+80.00	P.I. STA. = 249+05.00	P.I. STA. = 255+00.03	P.O.T. STA. = 262+65.08
N = 1,476,099.48	N = 1,476,018.18	N = 1,475,796.12	N = 1,475,507.99
E = 2,470,697.20	E = 2,470,906.99	E = 2,471,459.01	E = 2,472,167.77
Δ = 0° 58' 59" (LT)	Δ = 0° 43' 57" (RT)	Δ = 0° 12' 30" (RT)	

EXISTING EB US 150 ℄ ALIGNMENT DATA

EX. CURVE EX_US150EB-3	EX. CURVE EX_US150EB-4
PI STA. = 2153+74.88	PI STA. = 2163+32.83
N = 1,476,108.07	N = 1,475,821.55
E = 2,470,308.92	E = 2,471,223.60
Δ = 4° 46' 22" (LT)	Δ = 4° 46' 22" (RT)
D = 0° 29' 54"	D = 0° 29' 54"
R = 11,500.00'	R = 11,500.00'
T = 479.25'	T = 479.25'
L = 957.94'	L = 957.94'
E = 9.98'	E = 9.98'
e = N.C.	e = N.C.
T.R. = N/A	T.R. = N/A
S.E. RUN = N/A	S.E. RUN = N/A
P.C. STA. = 2148+95.63	P.R.C. STA. = 2158+53.58
N = 1,476,288.88	N = 1,475,964.81
E = 2,469,865.09	E = 2,470,766.26
P.R.C. STA. = 2158+53.58	P.T. STA. = 2168+11.52
N = 1,475,964.81	N = 1,475,640.74
E = 2,470,766.26	E = 2,471,667.43

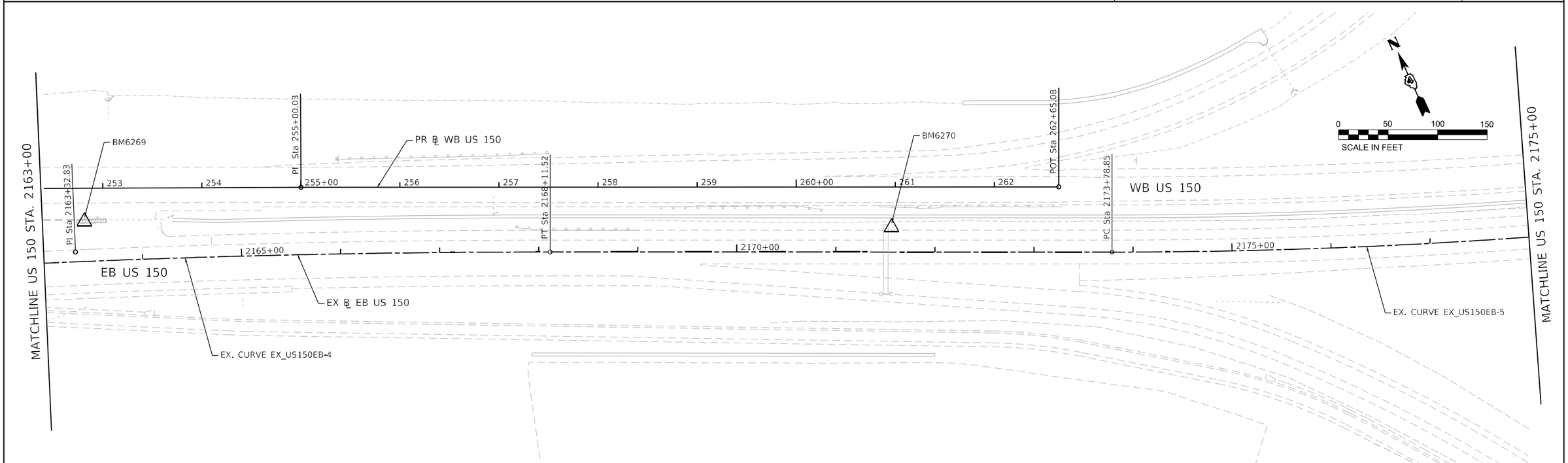

LIN ENGINEERING,LTD. Consulting Engineers Westmont, Illinois	USER NAME = rober	DESIGNED - NH	REVISED -
		DRAWN - NH	REVISED -
	PLOT SCALE = 100.0000 ' / in.	CHECKED - ST	REVISED -
	PLOT DATE = 2/12/2025	DATE - 1/2025	REVISED -

STATE OF ILLINOIS
DEPARTMENT OF TRANSPORTATION

US 150 WESTBOUND McCLUGAGE BRIDGE PROJECT
ALIGNMENT - ALIGNMENT PLAN

SCALE: 1"=50' | SHEET 4 OF 8 SHEETS | STA. TO STA.

F.A.P. RTE.	SECTION	COUNTY	TOTAL SHEETS	SHEET NO.
317	(15B-1)BP.BRR:(24HB-1)BR	PEORIA/TAZEWELL	418	30

CONTRACT NO. 68E44

ILLINOIS FED. AID PROJECT

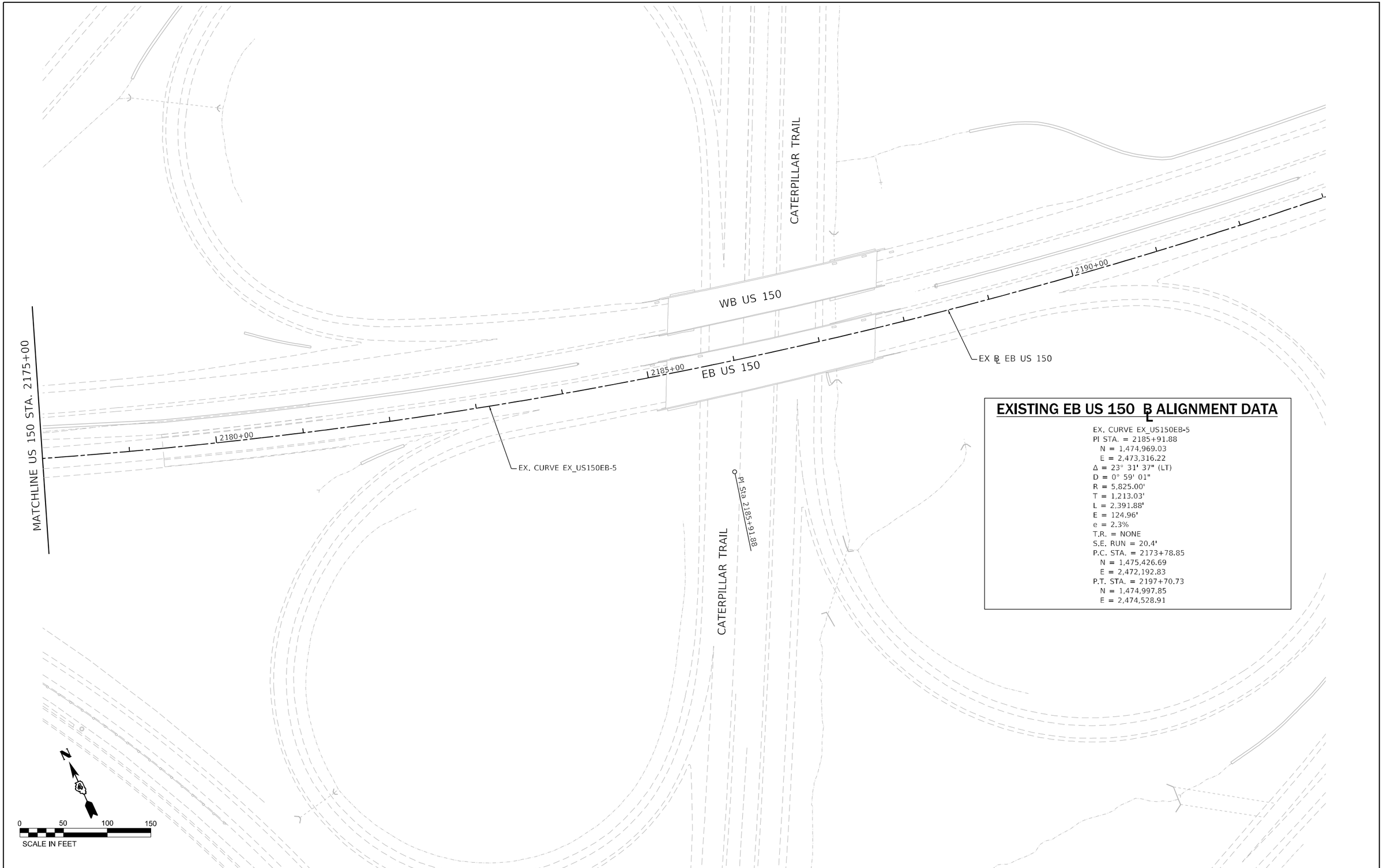

EXISTING EB US 150 ℄ ALIGNMENT DATA

EX. CURVE EX_US150EB-5
PI STA. = 2185+91.88
N = 1,474,969.03
E = 2,473,316.22
Δ = 23° 31' 37" (LT)
D = 0° 59' 01"
R = 5,825.00'
T = 1,213.03'
L = 2,391.88'
E = 124.96'
e = 2.3%
T.R. = NONE
S.E. RUN = 20.4'
P.C. STA. = 2173+78.85
N = 1,475,426.69
E = 2,472,192.83
P.T. STA. = 2197+70.73
N = 1,474,997.85
E = 2,474,528.91

LIN ENGINEERING,LTD. Consulting Engineers Westmont, Illinois	USER NAME = rober	DESIGNED - NH	REVISED -	STATE OF ILLINOIS DEPARTMENT OF TRANSPORTATION	US 150 WESTBOUND McCLUGAGE BRIDGE PROJECT ALIGNMENT - ALIGNMENT PLAN	F.A.P. RTE.	SECTION	COUNTY	TOTAL SHEETS / SHEET NO.
		DRAWN - NH	REVISED -			317	(15B-1)BP,BRR;(24HB-1)BR	PEORIA/TAZEWELL	418 / 31
	PLOT SCALE = 100.0000 ' / in.	CHECKED - ST	REVISED -					CONTRACT NO. 68E44	
	PLOT DATE = 2/12/2025	DATE - 1/2025	REVISED -		SCALE: 1"=50' SHEET 5 OF 8 SHEETS STA. TO STA.		ILLINOIS	FED. AID PROJECT	

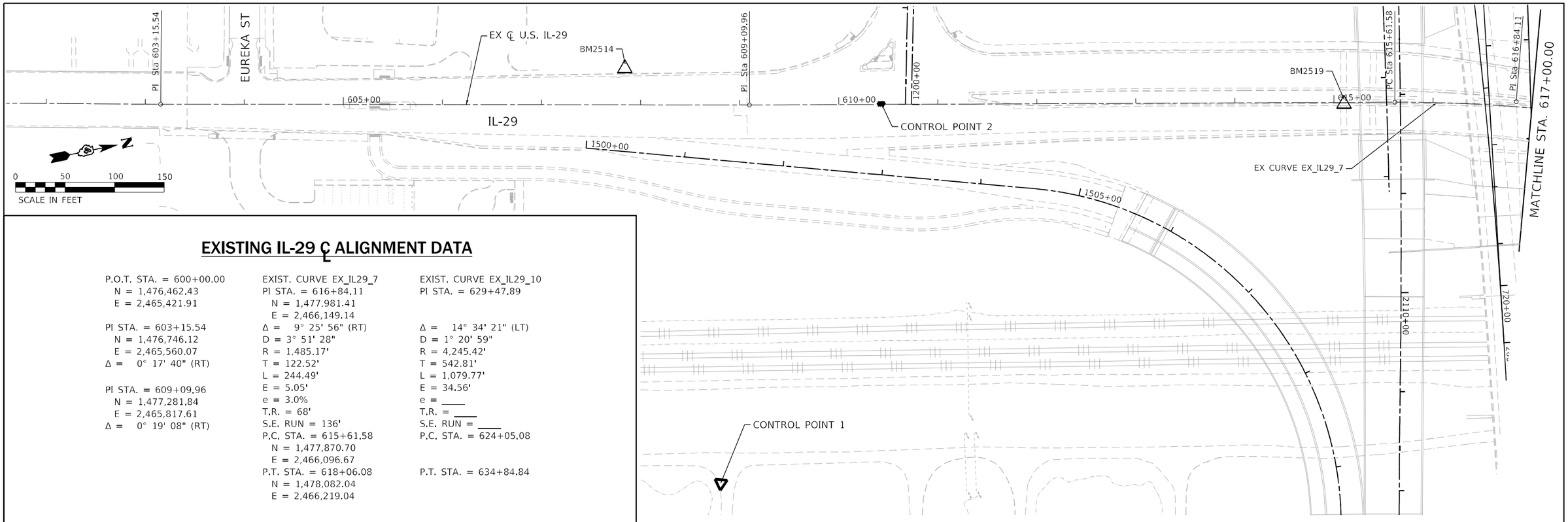

EXISTING IL-29 ℄ ALIGNMENT DATA

P.O.T. STA. = 600+00.00
N = 1,476,462.43
E = 2,465,421.91

PI STA. = 603+15.54
N = 1,476,746.12
E = 2,465,560.07
Δ = 0° 17' 40" (RT)

PI STA. = 609+09.96
N = 1,477,281.84
E = 2,465,817.61
Δ = 0° 19' 08" (RT)

EXIST. CURVE EX_IL29_7
PI STA. = 616+84.11
N = 1,477,981.41
E = 2,466,149.14
Δ = 9° 25' 56" (RT)
D = 3° 51' 28"
R = 1,485.17'
T = 122.52'
L = 244.49'
E = 5.05'
e = 3.0%
T.R. = 68'
S.E. RUN = 136'
P.C. STA. = 615+61.58
N = 1,477,870.70
E = 2,466,096.67
P.T. STA. = 618+06.08
N = 1,478,082.04
E = 2,466,219.04

EXIST. CURVE EX_IL29_10
PI STA. = 629+47.89

Δ = 14° 34' 21" (LT)
D = 1° 20' 59"
R = 4,245.42'
T = 542.81'
L = 1,079.77'
E = 34.56'
e = ____
T.R. = ____
S.E. RUN = ____
P.C. STA. = 624+05.08

P.T. STA. = 634+84.84

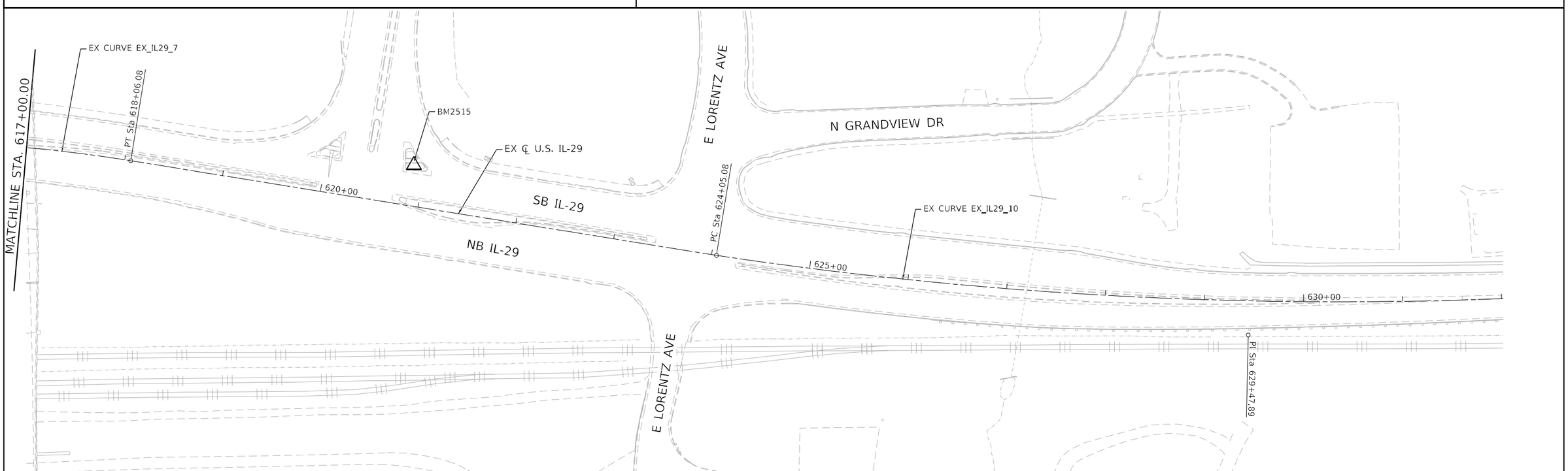

LIN ENGINEERING,LTD. Consulting Engineers Westmont, Illinois	USER NAME = rober	DESIGNED - NH	REVISED -
		DRAWN - NH	REVISED -
	PLOT SCALE = 100.0000 ' / in.	CHECKED - ST	REVISED -
	PLOT DATE = 2/12/2025	DATE - 1/2025	REVISED -

STATE OF ILLINOIS
DEPARTMENT OF TRANSPORTATION

US 150 WESTBOUND McCLUGAGE BRIDGE PROJECT
ALIGNMENT - ALIGNMENT PLAN

SCALE: 1"=50' | SHEET 6 OF 8 SHEETS | STA. | TO STA.

F.A.P. RTE.	SECTION	COUNTY	TOTAL SHEETS	SHEET NO.
317	(15B-1)BP.BRR:(24HB-1)BR	PEORIA/TAZEWELL	418	32
		CONTRACT NO. 68E44		
		ILLINOIS	FED. AID PROJECT	

PEORIA, IL BENCHMARKS

BM2514 N: 1,477,184.60, E: 2,465,728.69, ELEVATION = 496.21
CHISELED CROSS ON TOP OF SOUTHEAST ANCHOR BOLT IN CONCRETE BASE OF 2ND LAMP POLE NORTH OR EUREKA STREET ON THE WESTERLY SIDE OF NE ADAMS STREET (IL 29).

BM2515 N: 1,478,336.30, E: 2,466,346.04, ELEVATION = 479.75
CHISELED SQUARE ON SOUTHERLY SIDE OF CONCRETE TRAFFIC SIGNAL BASE IN NORTHERLY CONCRETE ISLAND AT THE INTERSECTION OF SOUTHBOUND NE ADAMS STREET (IL 29) AND ENTRANCE RAMP TO WESTBOUND WAR MEMORIAL DRIVE (US 150).

BM2516 N: 1,478,049.48, E: 2,466,052.99, ELEVATION = 511.94
CHISELED SQUARE ON TOP OF THE WEST END OF THE NORTHERLY CONCRETE BARRIER WALL ON THE WEST ABUTMENT OF WESTBOUND BRIDGE OF WAR MEMORIAL DRIVE (US 150) OVER NE ADAMS STREET (IL 29) AT THE EXIT RAMP TO NE ADAMS STREET (IL 29).

BM2517 N: 1,478,373.28, E: 2,465,051.00, ELEVATION = 553.64
CHISELED CROSS ON SOUTHEAST BONNET BOLT OF FIRE HYDRANT NORTH SIDE OF WAR MEMORIAL DRIVE (US 150) +/- 260' EAST OF THE CENTERLINE OF NE ROCK ISLAND AVENUE.

BM2518 N: 1,477,853.91, E: 2,465,545.93, ELEVATION = 512.95
CHISELED CROSS ON SOUTHEAST ANCHOR BOLT AT BASE OF 2ND LIGHT POLE SOUTH OF WAR MEMORIAL DRIVE (US 150) ON WEST SIDE OF RAMP FROM EASTBOUND WAR MEMORIAL DRIVE (US 150) TO NE ADAMS STREET (IL 29).

BM2519 N: 1,477,823.80, E: 2,466,074.68, ELEVATION = 488.65
BRASS DECK GROUTED IN CONCRETE MEDIAN AT EASTERLY BACK OF CURB NORTHBOUND NE ADAMS STREET (IL 29) +/- 68' SOUTH OF SOUTH FACE OF BRIDGE FOR EASTBOUND WAR MEMORIAL DRIVE (US 150) OVER NE ADAMS STREET (IL 29).

EAST PEORIA, IL BENCHMARKS

BM6257 N: 1,473,702.84, E: 2,472,723.44, ELEVATION = 473.99
CHISELED CROSS ON TOP OF CENTER ANCHOR BOLT WESTERLY SIDE OF NORTHERLY CONCRETE PIER FOR WESTERLY SUPPORTS OF OVERHEAD TRAFFIC SIGN NORTHBOUND N MAIN STREET (IL 116) AT RAMP TO EASTBOUND US 24 (WASHINGTON).

BM6269 N: 1,475,847.93, E: 2,471,243.98, ELEVATION = 464.49
CHISELED SQUARE ON TOP OF EAST END OF CONCRETE BARRIER WALL WHERE IT CONNECTS TO GUARDRAIL IN CENTER MEDIAN TURNAROUND ALONG US 150, EAST OF ILLINOIS RIVER.

BM6270 N: 1,475,534.66, E: 2,471,996.38, ELEVATION = 466.66
CHISELED CROSS TOP OF SOUTHEAST ANCHOR BOLT EASTERLY CONCRETE PIER FOR NORTHERLY SUPPORTS OF OVERHEAD SIGN EASTBOUND US 150 AT RAMP TO IL 116 (EAST PEORIA).

C.P. 1

N: 1,477,090.90
E: 2,466,149.26

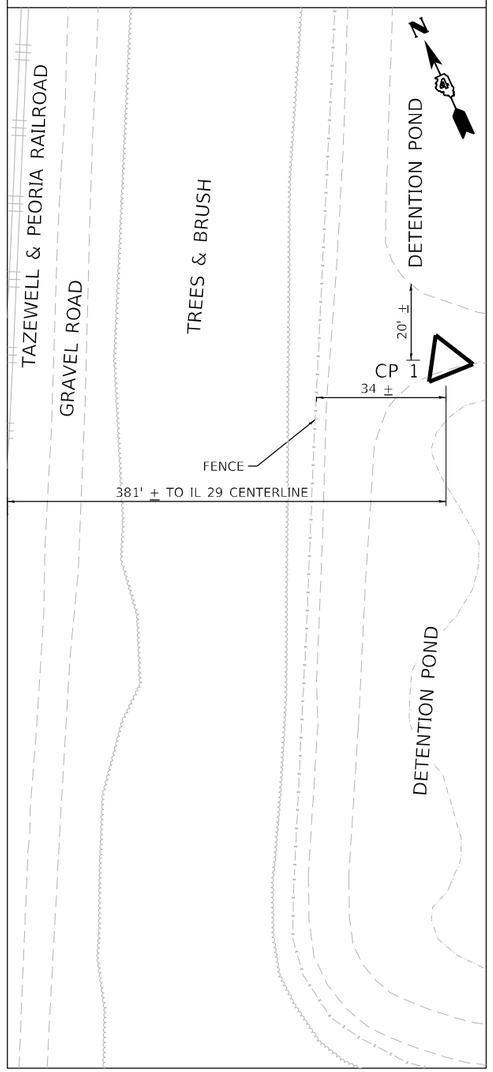

C.P. 2

N: 1,477,400.88
E: 2,465,873.29

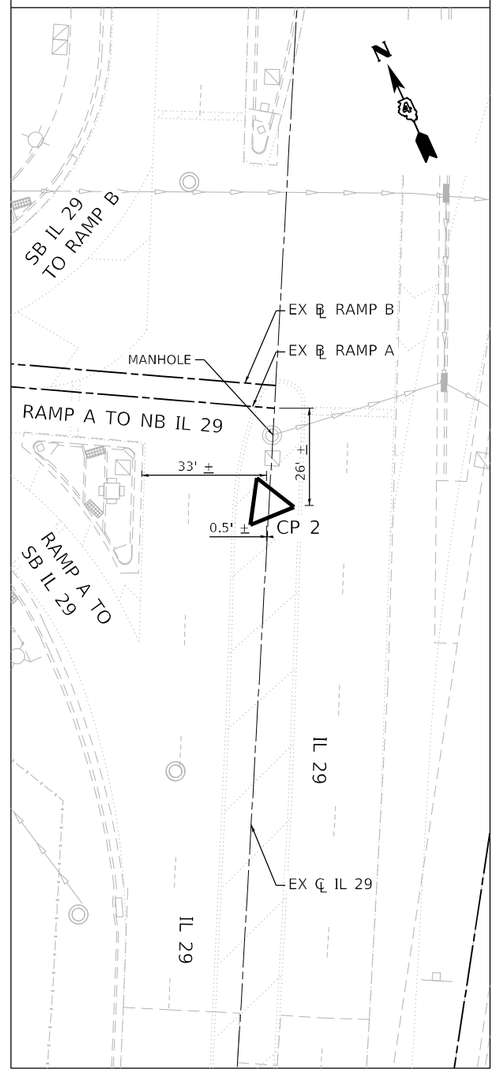

C.P. 3

N: 1,477,660.53
E: 2,465,517.81

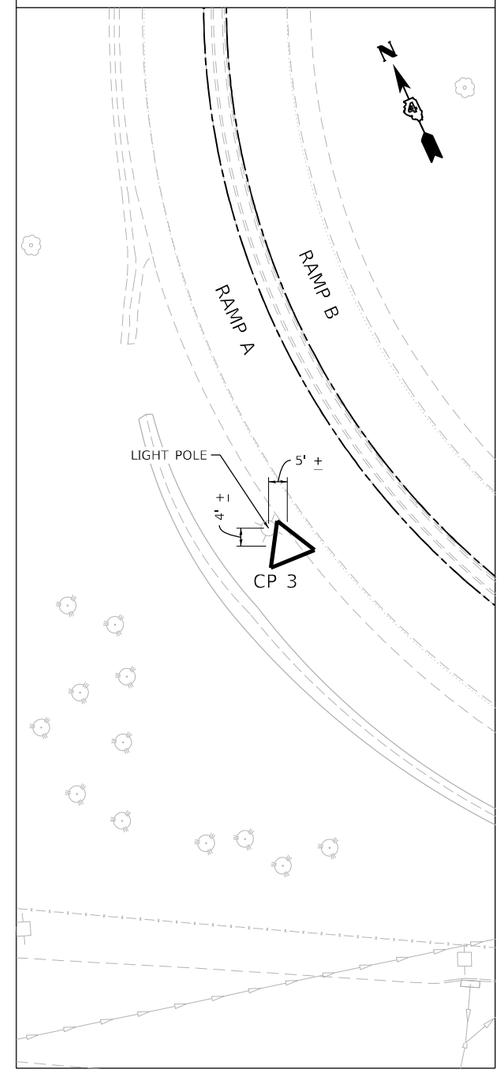

C.P. 4

N: 1,476,999.60
E: 2,466,355.72

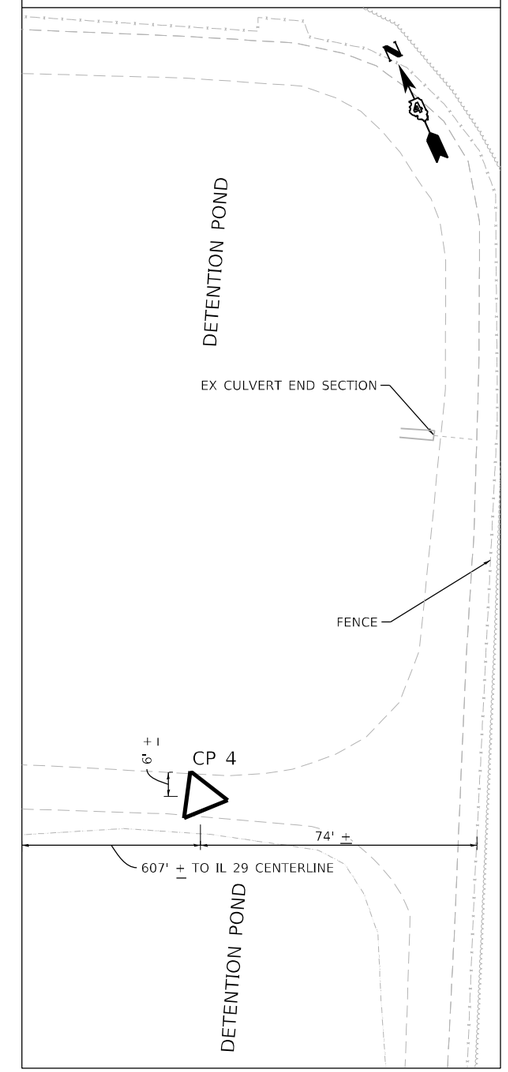

LIN ENGINEERING,LTD. Consulting Engineers Westmont, Illinois	USER NAME = rober	DESIGNED - NH	REVISED -
		DRAWN - NH	REVISED -
	PLOT SCALE = 40.0000 ' / in.	CHECKED - ST	REVISED -
	PLOT DATE = 2/12/2025	DATE - 1/2025	REVISED -

STATE OF ILLINOIS
DEPARTMENT OF TRANSPORTATION

US 150 WESTBOUND McCLUGAGE BRIDGE PROJECT
ALIGNMENT - SURVEY TIES FOR CONTROL POINTS

SCALE: N.T.S. | SHEET 8 OF 8 SHEETS | STA. TO STA.

F.A.P. RTE.	SECTION	COUNTY	TOTAL SHEETS	SHEET NO.
317	(15B-1)BP,BRR:(24HB-1)BR	PEORIA/TAZEWELL	418	34
		CONTRACT NO. 68E44		
		ILLINOIS FED. AID PROJECT		

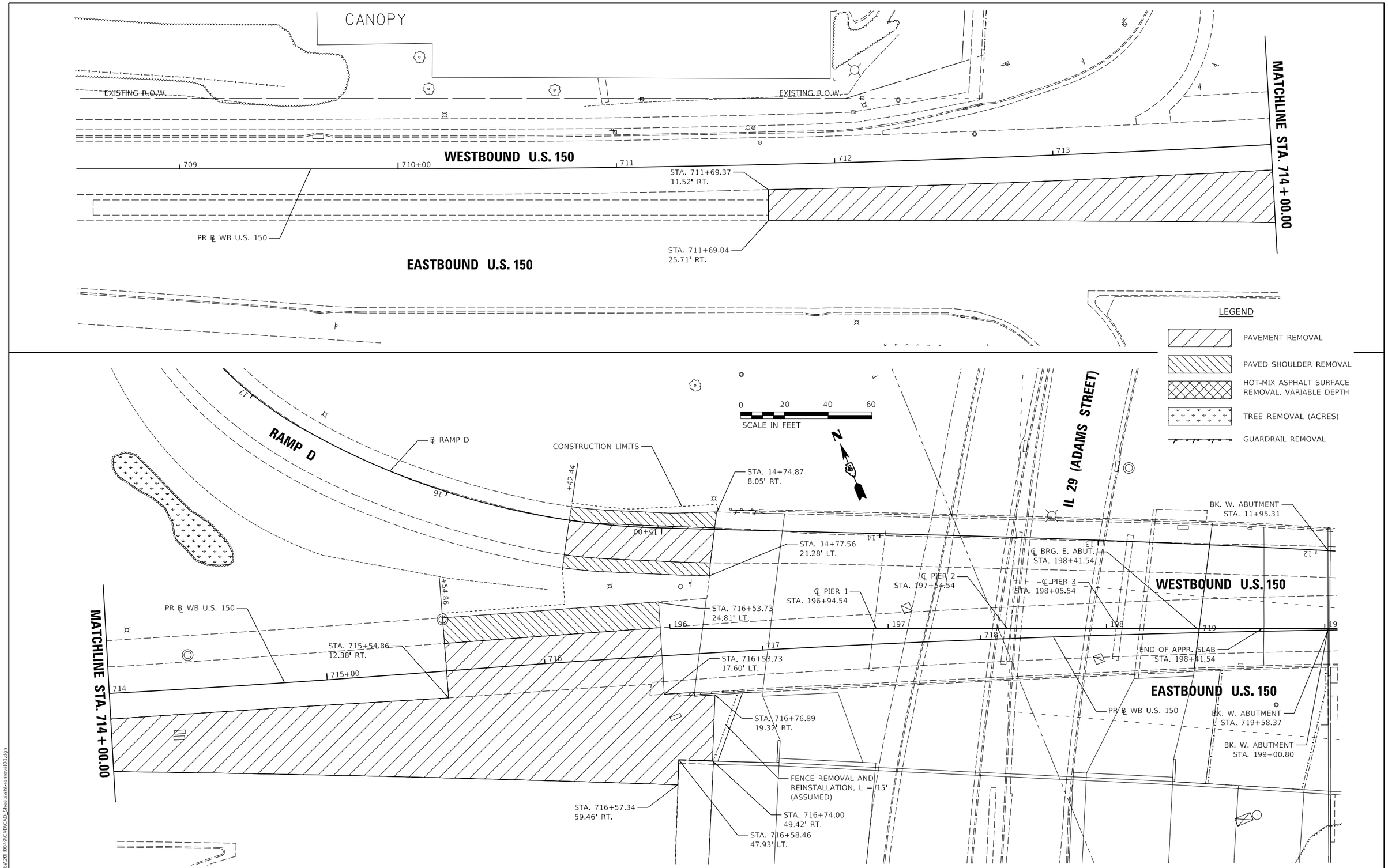

HANSON
Hanson Professional Services Inc.

LAYOUT	RLA	10/31/2023
DRAWN	CM/RLA	1/13/2025
REVIEWED	MGD	1/14/2025

MODEL: Default
FILE NAME: h:\20\ais\20H0949\CAD\CAD_Sheets\sht-removal01.dgn

USER NAME = Ander00846	DESIGNED - RLA	REVISED -	
	DRAWN - CM/RLA	REVISED -	
PLOT SCALE = 40.00 ' / in.	CHECKED - MGD	REVISED -	
PLOT DATE = 2/13/2025	DATE - 1/14/2025	REVISED -	

STATE OF ILLINOIS
DEPARTMENT OF TRANSPORTATION

WESTBOUND US 150 McCLUGAGE BRIDGE
REMOVAL PLANS

SCALE: 1"=20' | SHEET OF SHEETS | STA. TO STA.

F.A.P. RTE.	SECTION	COUNTY	TOTAL SHEETS	SHEET NO.
317A	(15B-1)BP, BRR:(14HB-1)BRR	PEORIA/TAZWELL	418	35
		CONTRACT NO. 68E44		
	ILLINOIS	FED. AID PROJECT		

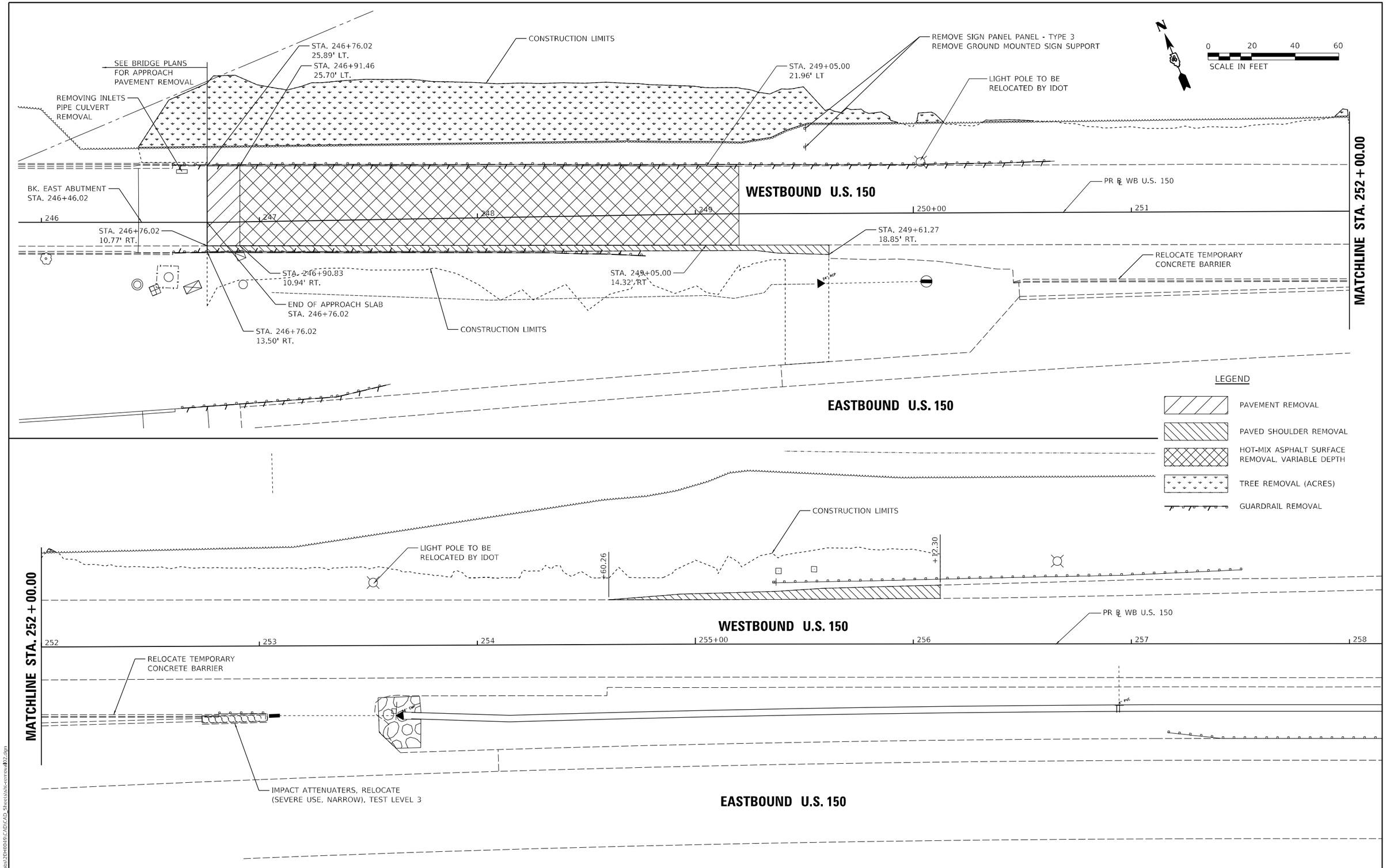

HANSON
Hanson Professional Services Inc.

LAYOUT	RLA	10/31/2023
DRAWN	CM/RLA	1/13/2025
REVIEWED	MGD	1/14/2025

MODEL: Default
FILE NAME: I:\20jobs\20H0049\CADCAD-Sheets\Sh-removal02.dgn

USER NAME = Ander00846	DESIGNED - RLA	REVISED -	STATE OF ILLINOIS DEPARTMENT OF TRANSPORTATION
	DRAWN - CM/RLA	REVISED -	
PLOT SCALE = 40.00 ' / in.	CHECKED - MGD	REVISED -	
PLOT DATE = 2/13/2025	DATE - 1/14/2025	REVISED -	

WESTBOUND US 150 McCLUGAGE BRIDGE REMOVAL PLANS

SCALE: 1"=20' | SHEET OF SHEETS | STA. TO STA.

F.A.P. RTE.	SECTION	COUNTY	TOTAL SHEETS	SHEET NO.
317A	(15B-1)BP, BRR:(14HB-1)BRR	PEORIA/TAZWELL	418	36

CONTRACT NO. 68E44

ILLINOIS | FED. AID PROJECT

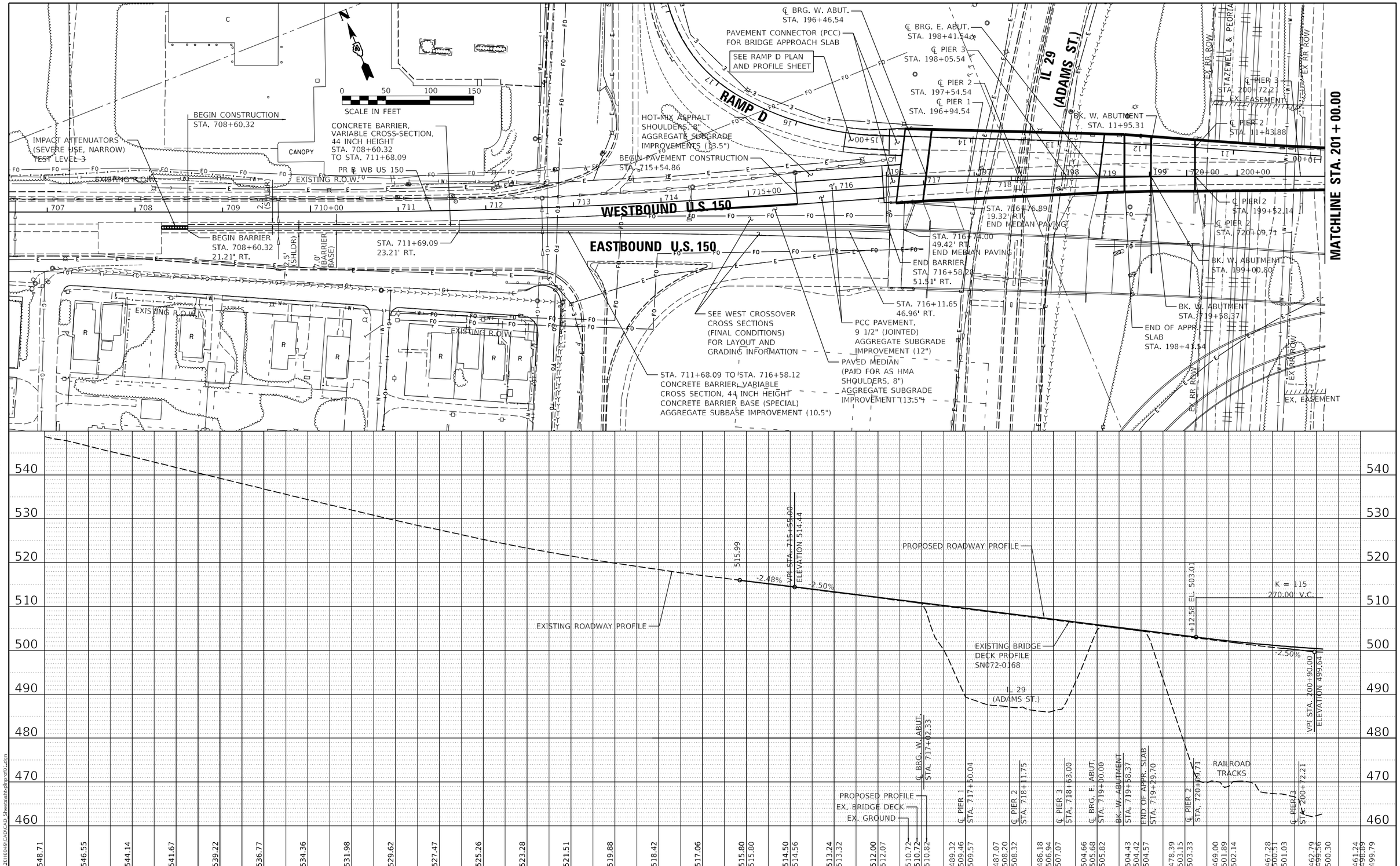

PLAN		
NOTE BOOK NO.	SURVEYED	
	PLOTTED	
	ALIGNMENT CHECKED	
	RT. OF WAY CHECKED	
	CADD FILE NAME	

BY	DATE

PROFILE		
NOTE BOOK NO.	SURVEYED	
	PLOTTED	
	GRADES CHECKED	
	B.V.'S NOTED	
	STRUCTURE NOTAT'NS CH'KD	

BY	DATE

HANSON
Hanson Professional Services Inc.

LAYOUT	RLA	10/31/2023
DRAWN	CM/RLA	1/13/2025
REVIEWED	MGD	1/14/2025

MODEL: Default
FILE NAME: I:\2016\ta2016049\CADD\CAD Sheets\sht-plnprof01.dgn

USER NAME = Ander00846	DESIGNED - RLA	REVISED -	
	DRAWN - CM/RLA	REVISED -	
PLOT SCALE = 100.00 ' / in.	CHECKED - MGD	REVISED -	
PLOT DATE = 2/13/2025	DATE - 1/14/2025	REVISED -	

STATE OF ILLINOIS
DEPARTMENT OF TRANSPORTATION

WESTBOUND US 150 McCLUGAGE BRIDGE
PLAN AND PROFILES

SCALE: 1"=50' | SHEET OF SHEETS | STA. TO STA.

F.A.P. RTE.	SECTION	COUNTY	TOTAL SHEETS	SHEET NO.
317A	(15B-1)BP, BRR:(14HB-1)BRR	PEORIA/TAZWELL	418	37
		CONTRACT NO.68E44		
		ILLINOIS	FED. AID PROJECT	

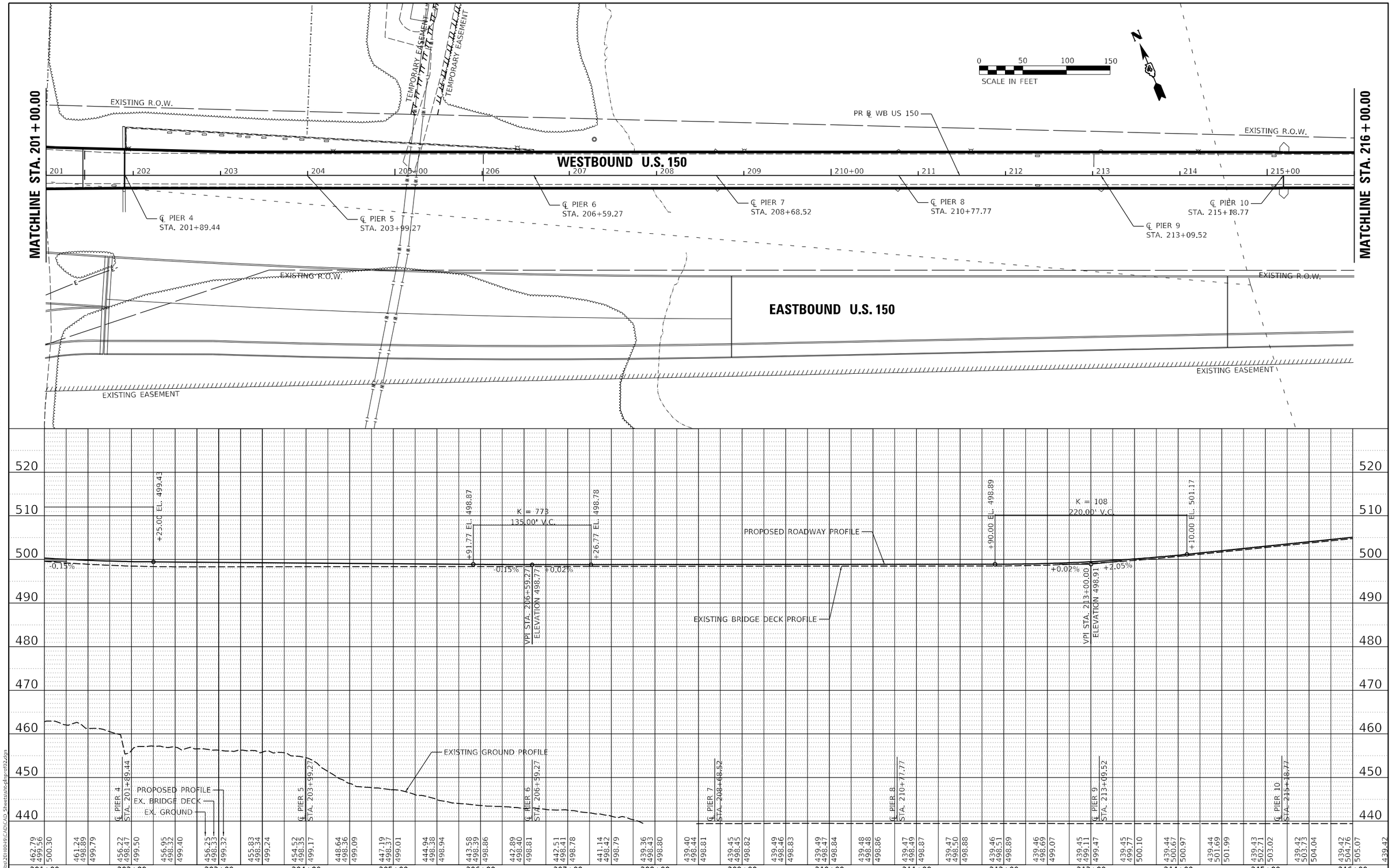

PLAN		BY	DATE
NOTE BOOK NO.	SURVEYED		
	PLOTTED		
	ALIGNMENT CHECKED		
	RT. OF WAY CHECKED		
	CADD FILE NAME		

PROFILE		BY	DATE
NOTE BOOK NO.	SURVEYED		
	PLOTTED		
	GRADES CHECKED		
	B.M. NOTED		
	STRUCTURE NOTAT'NS CH'KD		

HANSON
Hanson Professional Services Inc.

LAYOUT	RLA	10/31/2023
DRAWN	CM/RLA	1/13/2025
REVIEWED	MGD	1/14/2025

MODEL: Default
FILE NAME: I:\20jobs\20100\9\CAD\CAD Sheets\sht-plnprof02.dgn

USER NAME = Ander00846	DESIGNED - RLA	REVISED -	
	DRAWN - CM/RLA	REVISED -	
PLOT SCALE = 100.00 ' / in.	CHECKED - MGD	REVISED -	
PLOT DATE = 2/13/2025	DATE - 1/14/2025	REVISED -	

STATE OF ILLINOIS
DEPARTMENT OF TRANSPORTATION

WESTBOUND US 150 McCLUGAGE BRIDGE
PLAN AND PROFILES

SCALE: 1"=50' | SHEET OF SHEETS | STA. TO STA.

F.A.P. RTE.	SECTION	COUNTY	TOTAL SHEETS	SHEET NO.
317A	(15B-1)BP, BRR:(14HB-1)BRR	PEORIA/TAZWELL	418	38
		CONTRACT NO.68E44		
		ILLINOIS	FED. AID PROJECT	

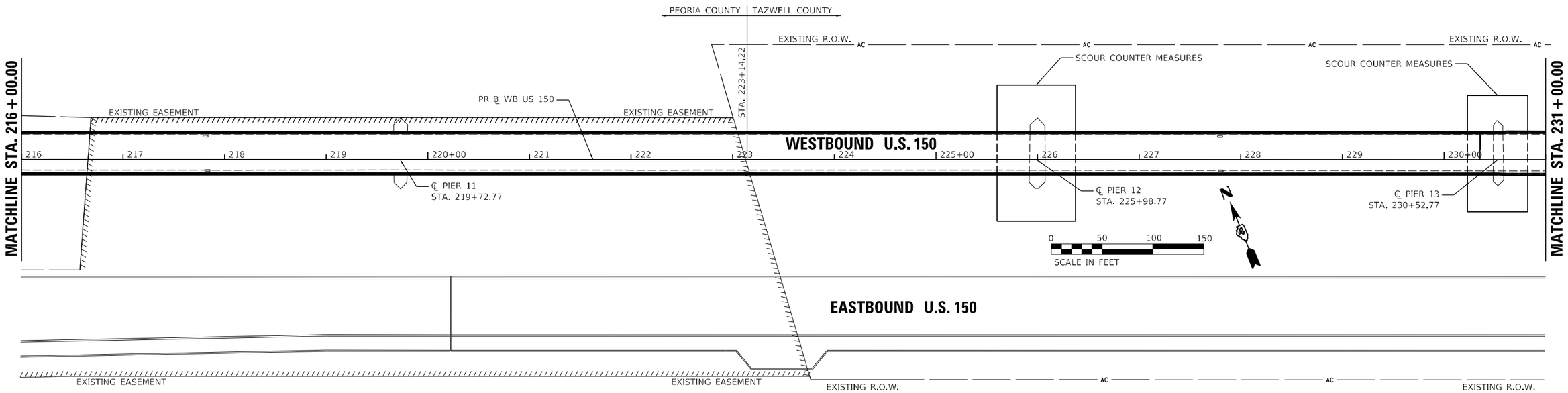

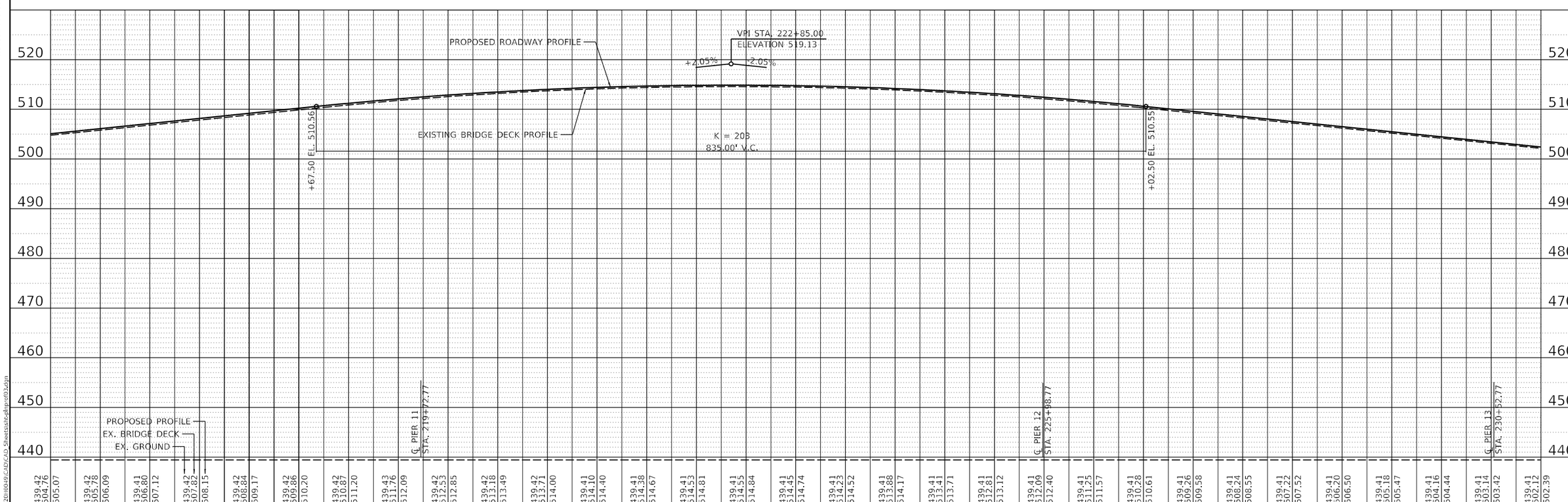

PLAN		BY	DATE
NOTE BOOK NO.	SURVEYED		
	PLOTTED		
	ALIGNMENT CHECKED		
	RT. OF WAY CHECKED		
	CADD FILE NAME		

PROFILE		BY	DATE
NOTE BOOK NO.	SURVEYED		
	PLOTTED		
	GRADES CHECKED		
	B.M. NOTED		
	STRUCTURE NOTAT'NS CH'KD		

HANSON
Hanson Professional Services Inc.

LAYOUT	RLA	10/31/2023
DRAWN	CM/RLA	1/13/2025
REVIEWED	MGD	1/14/2025

MODEL: Default
FILE NAME: I:\20jobs\2011\0049\CAD\CAD Sheets\phcplnprof03.dgn

USER NAME = Ander00846	DESIGNED - RLA	REVISED -	
	DRAWN - CM/RLA	REVISED -	
PLOT SCALE = 100.00 ' / in.	CHECKED - MGD	REVISED -	
PLOT DATE = 2/13/2025	DATE - 1/14/2025	REVISED -	

STATE OF ILLINOIS
DEPARTMENT OF TRANSPORTATION

WESTBOUND US 150 McCLUGAGE BRIDGE
PLAN AND PROFILES

SCALE: 1"=50' | SHEET OF SHEETS | STA. TO STA.

F.A.P. RTE.	SECTION	COUNTY	TOTAL SHEETS	SHEET NO.
317A	(15B-1)BP, BRR;(14HB-1)BRR	PEORIA/TAZWELL	418	39

CONTRACT NO.68E44

ILLINOIS | FED. AID PROJECT

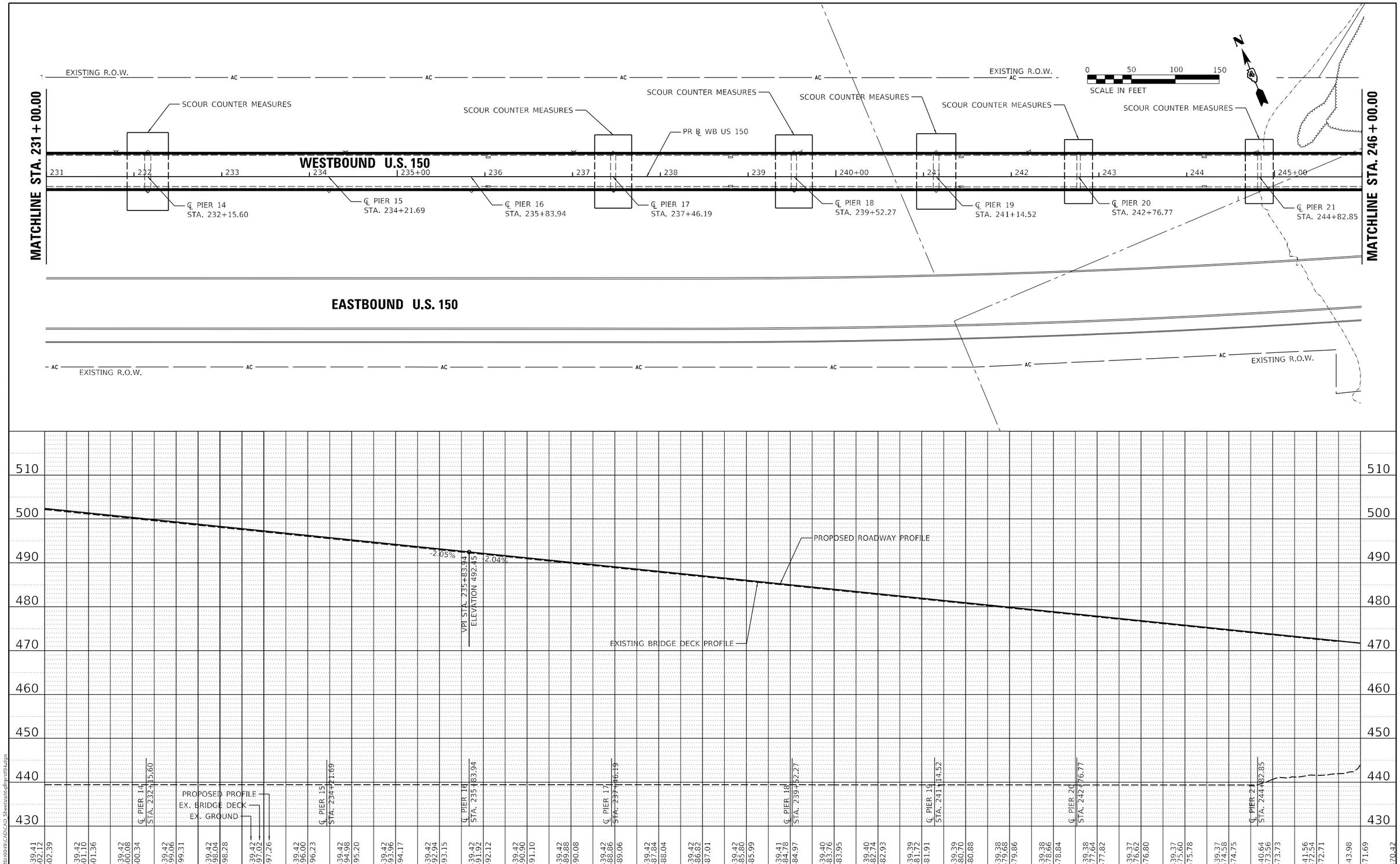

PLAN		BY	DATE
NOTE BOOK NO.	SURVEYED		
	PLOTTED		
	ALIGNMENT CHECKED		
	RT. OF WAY CHECKED		
	CADD FILE NAME		

PROFILE		BY	DATE
NOTE BOOK NO.	SURVEYED		
	PLOTTED		
	GRADES CHECKED		
	B.M. NOTED		
	STRUCTURE NOTAT'NS CH'KD		

HANSON
Hanson Professional Services Inc.

LAYOUT	RLA	10/31/2023
DRAWN	CM/RLA	1/13/2025
REVIEWED	MGD	1/14/2025

MODEL: Default
FILE NAME: I:\2\0\jobs\2\0100\49\CAD\CAD Sheets\pltcplprofl4.dgn

USER NAME = Ander00846	DESIGNED - RLA	REVISED -	
	DRAWN - CM/RLA	REVISED -	
PLOT SCALE = 100.00 ' / in.	CHECKED - MGD	REVISED -	
PLOT DATE = 2/13/2025	DATE - 1/14/2025	REVISED -	

STATE OF ILLINOIS
DEPARTMENT OF TRANSPORTATION

WESTBOUND US 150 McCLUGAGE BRIDGE
PLAN AND PROFILES

SCALE: 1"=50' | SHEET OF SHEETS | STA. TO STA.

F.A.P. RTE.	SECTION	COUNTY	TOTAL SHEETS	SHEET NO.
317A	(15B-1)BP, BRR;(14HB-1)BRR	PEORIA/TAZWELL	418	40

CONTRACT NO.68E44

ILLINOIS | FED. AID PROJECT

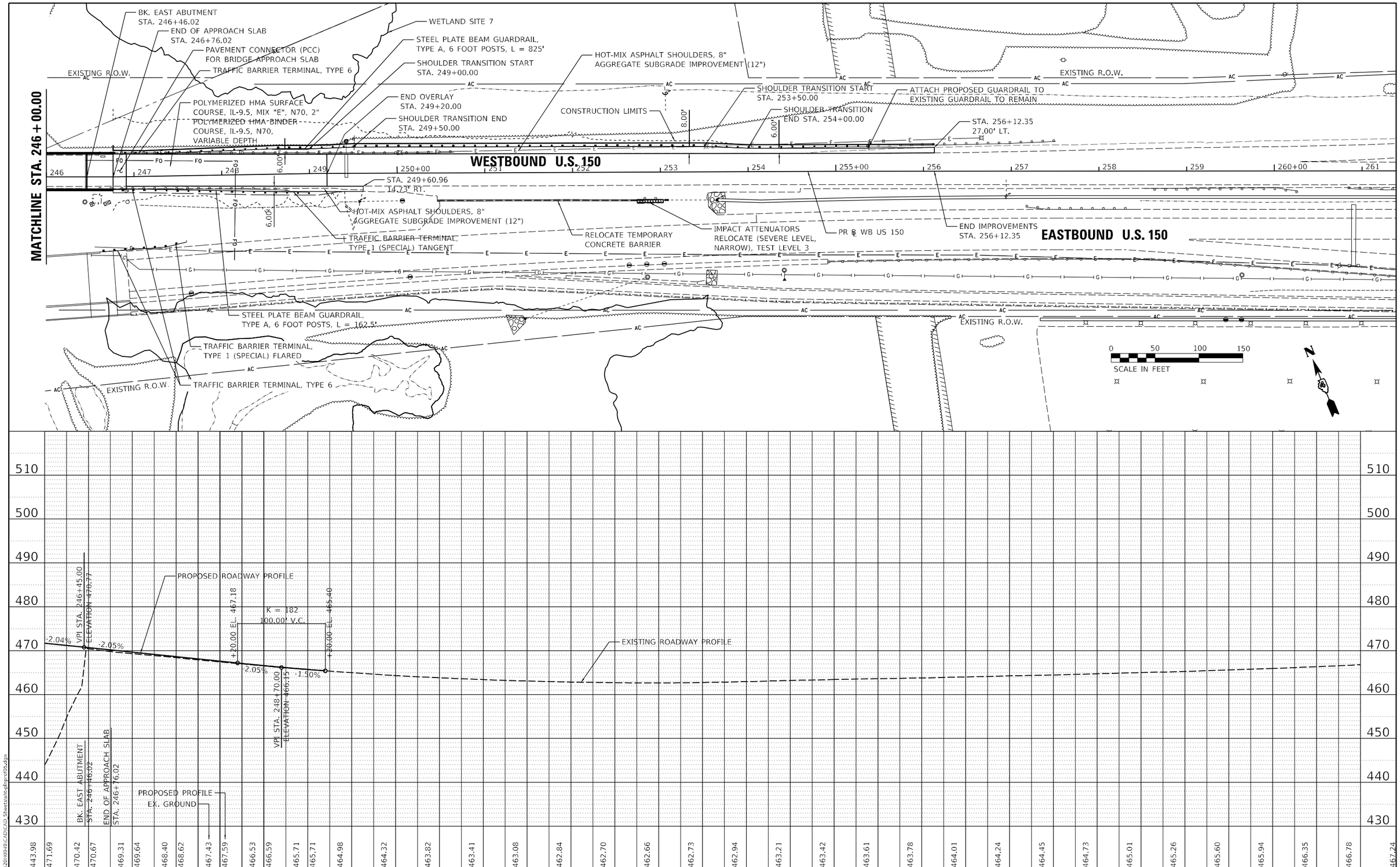

PLAN		BY	DATE
NOTE BOOK NO.	SURVEYED		
	PLOTTED		
	ALIGNMENT CHECKED		
	RT. OF WAY CHECKED		
	CADD FILE NAME		

PROFILE		BY	DATE
NOTE BOOK NO.	SURVEYED		
	PLOTTED		
	GRADES CHECKED		
	B.M. NOTED		
	STRUCTURE NOTATNS CHKD		

HANSON
Hanson Professional Services Inc.

LAYOUT	RLA	10/31/2023
DRAWN	CM/RLA	1/13/2025
REVIEWED	MGD	1/14/2025

MODEL: Default
FILE NAME: I:\2010\0049\CAD\CAD Sheets\sht01plprof05.dgn

USER NAME = Ander00846	DESIGNED - RLA	REVISED -	STATE OF ILLINOIS DEPARTMENT OF TRANSPORTATION
	DRAWN - CM/RLA	REVISED -	
PLOT SCALE = 100.00 ' / in.	CHECKED - MGD	REVISED -	
PLOT DATE = 2/13/2025	DATE - 1/14/2025	REVISED -	

WESTBOUND US 150 McCLUGAGE BRIDGE
PLAN AND PROFILES

SCALE: 1"=50' | SHEET OF SHEETS | STA. TO STA.

F.A.P. RTE.	SECTION	COUNTY	TOTAL SHEETS	SHEET NO.
317A	(15B-1)BP, BRR;(14HB-1)BRR	PEORIA/TAZWELL	418	41

CONTRACT NO.68E44

ILLINOIS | FED. AID PROJECT

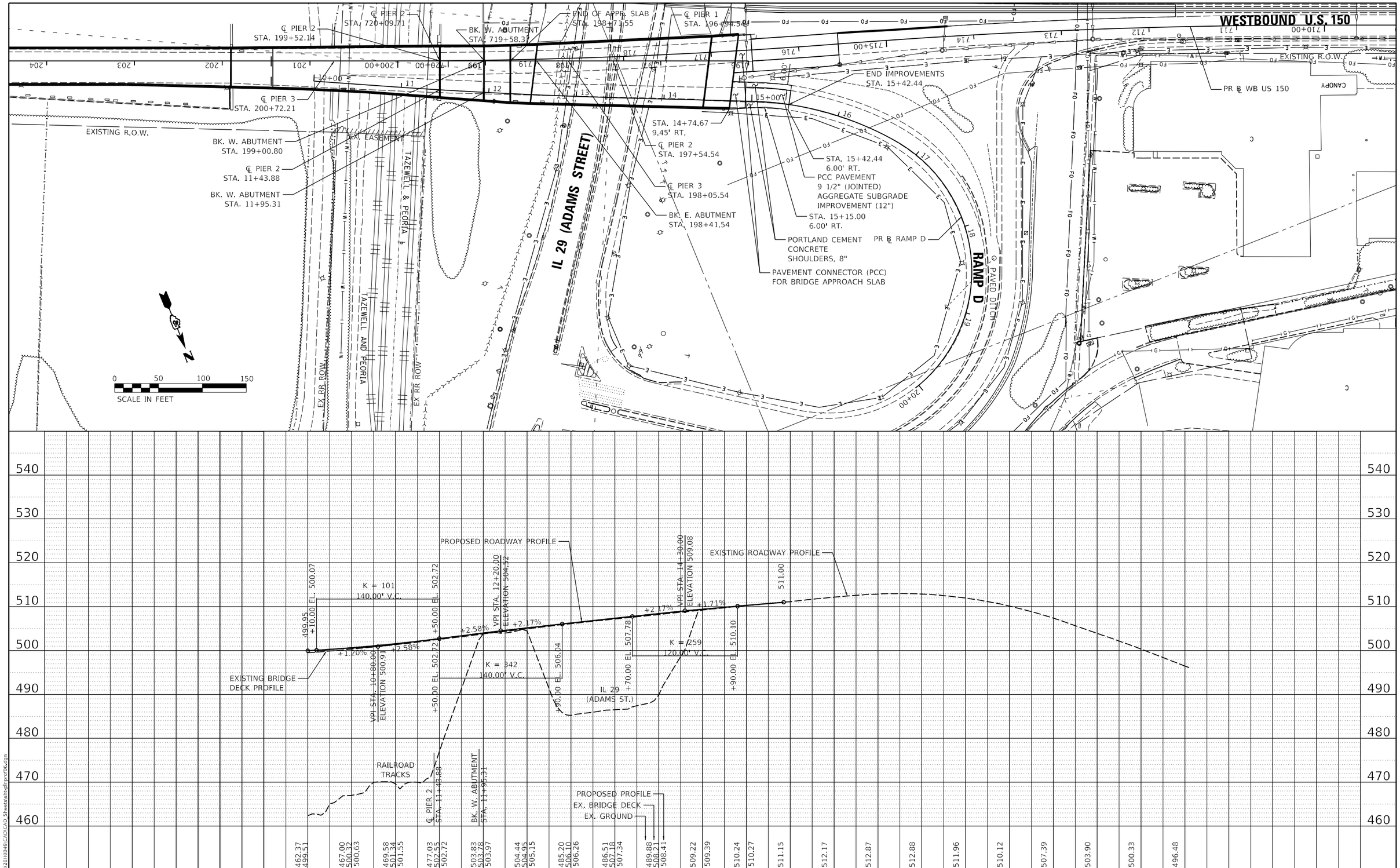

PLAN		BY	DATE
NOTE BOOK NO.	SURVEYED		
	PLOTTED		
	ALIGNMENT CHECKED		
	RT. OF WAY CHECKED		
	CADD FILE NAME		

PROFILE		BY	DATE
NOTE BOOK NO.	SURVEYED		
	PLOTTED		
	GRADES CHECKED		
	B.M. NOTED		
	STRUCTURE NOTA/TKS CHKD		

HANSON
Hanson Professional Services Inc.

LAYOUT	RLA	10/31/2023
DRAWN	CM/RLA	1/13/2025
REVIEWED	MGD	1/14/2025

MODEL: Default
FILE NAME: I:\2016\0049\CAD\CAD Sheets\sht-plnprof06.dgn

USER NAME = Ander00846	DESIGNED - RLA	REVISED -	
	DRAWN - CM/RLA	REVISED -	
PLOT SCALE = 100.00 ' / in.	CHECKED - MGD	REVISED -	
PLOT DATE = 2/13/2025	DATE - 1/14/2025	REVISED -	

STATE OF ILLINOIS
DEPARTMENT OF TRANSPORTATION

RAMP D
PLAN AND PROFILES

SCALE: 1"=50' | SHEET OF SHEETS | STA. TO STA.

F.A.P. RTE.	SECTION	COUNTY	TOTAL SHEETS	SHEET NO.
317A	(15B-1)BP, BRR:(14HB-1)BRR	PEORIA/TAZWELL	418	42
		CONTRACT NO.68E44		
		ILLINOIS	FED. AID PROJECT	

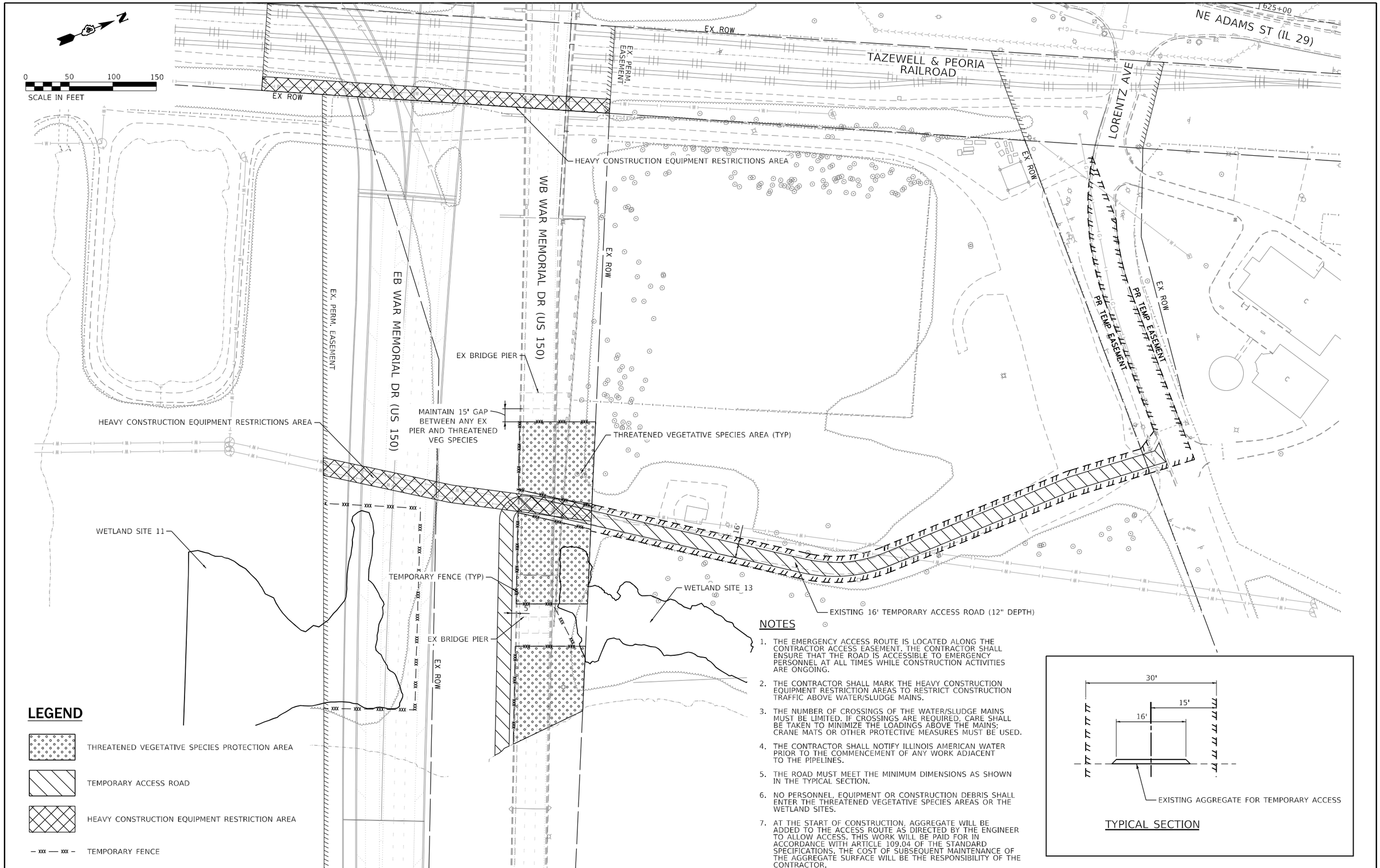

LEGEND

- THREATENED VEGETATIVE SPECIES PROTECTION AREA
- TEMPORARY ACCESS ROAD
- HEAVY CONSTRUCTION EQUIPMENT RESTRICTION AREA
- — xxx — xxx — TEMPORARY FENCE

NOTES

1. THE EMERGENCY ACCESS ROUTE IS LOCATED ALONG THE CONTRACTOR ACCESS EASEMENT. THE CONTRACTOR SHALL ENSURE THAT THE ROAD IS ACCESSIBLE TO EMERGENCY PERSONNEL AT ALL TIMES WHILE CONSTRUCTION ACTIVITIES ARE ONGOING.
2. THE CONTRACTOR SHALL MARK THE HEAVY CONSTRUCTION EQUIPMENT RESTRICTION AREAS TO RESTRICT CONSTRUCTION TRAFFIC ABOVE WATER/SLUDGE MAINS.
3. THE NUMBER OF CROSSINGS OF THE WATER/SLUDGE MAINS MUST BE LIMITED. IF CROSSINGS ARE REQUIRED, CARE SHALL BE TAKEN TO MINIMIZE THE LOADINGS ABOVE THE MAINS: CRANE MATS OR OTHER PROTECTIVE MEASURES MUST BE USED.
4. THE CONTRACTOR SHALL NOTIFY ILLINOIS AMERICAN WATER PRIOR TO THE COMMENCEMENT OF ANY WORK ADJACENT TO THE PIPELINES.
5. THE ROAD MUST MEET THE MINIMUM DIMENSIONS AS SHOWN IN THE TYPICAL SECTION.
6. NO PERSONNEL, EQUIPMENT OR CONSTRUCTION DEBRIS SHALL ENTER THE THREATENED VEGETATIVE SPECIES AREAS OR THE WETLAND SITES.
7. AT THE START OF CONSTRUCTION, AGGREGATE WILL BE ADDED TO THE ACCESS ROUTE AS DIRECTED BY THE ENGINEER TO ALLOW ACCESS. THIS WORK WILL BE PAID FOR IN ACCORDANCE WITH ARTICLE 109.04 OF THE STANDARD SPECIFICATIONS. THE COST OF SUBSEQUENT MAINTENANCE OF THE AGGREGATE SURFACE WILL BE THE RESPONSIBILITY OF THE CONTRACTOR.

TYPICAL SECTION

LIN ENGINEERING, LTD. Consulting Engineers Westmont, Illinois	USER NAME = rober	DESIGNED - NH	REVISED -
		DRAWN - NH	REVISED -
	PLOT SCALE = 100.00 ' / in.	CHECKED - ST	REVISED -
	PLOT DATE = 2/12/2025	DATE - 1/2025	REVISED -

STATE OF ILLINOIS
DEPARTMENT OF TRANSPORTATION

US 150 WESTBOUND McCLUGAGE BRIDGE PROJECT
CONTRACTOR ACCESS / EMERGENCY RIVER ACCESS DETAIL / RESTRICTED CONSTRUCTION AREAS

SCALE: 1"=50' | SHEET 1 OF 2 SHEETS | STA. TO STA.

F.A.P. RTE.	SECTION	COUNTY	TOTAL SHEETS	SHEET NO.
317	(15B-1)BP,BRR;(14HB-1)BRR	PEORIA/TAZEWELL	418	43

CONTRACT NO. 68E44

ILLINOIS | FED. AID PROJECT NHPP-YRP3(905)

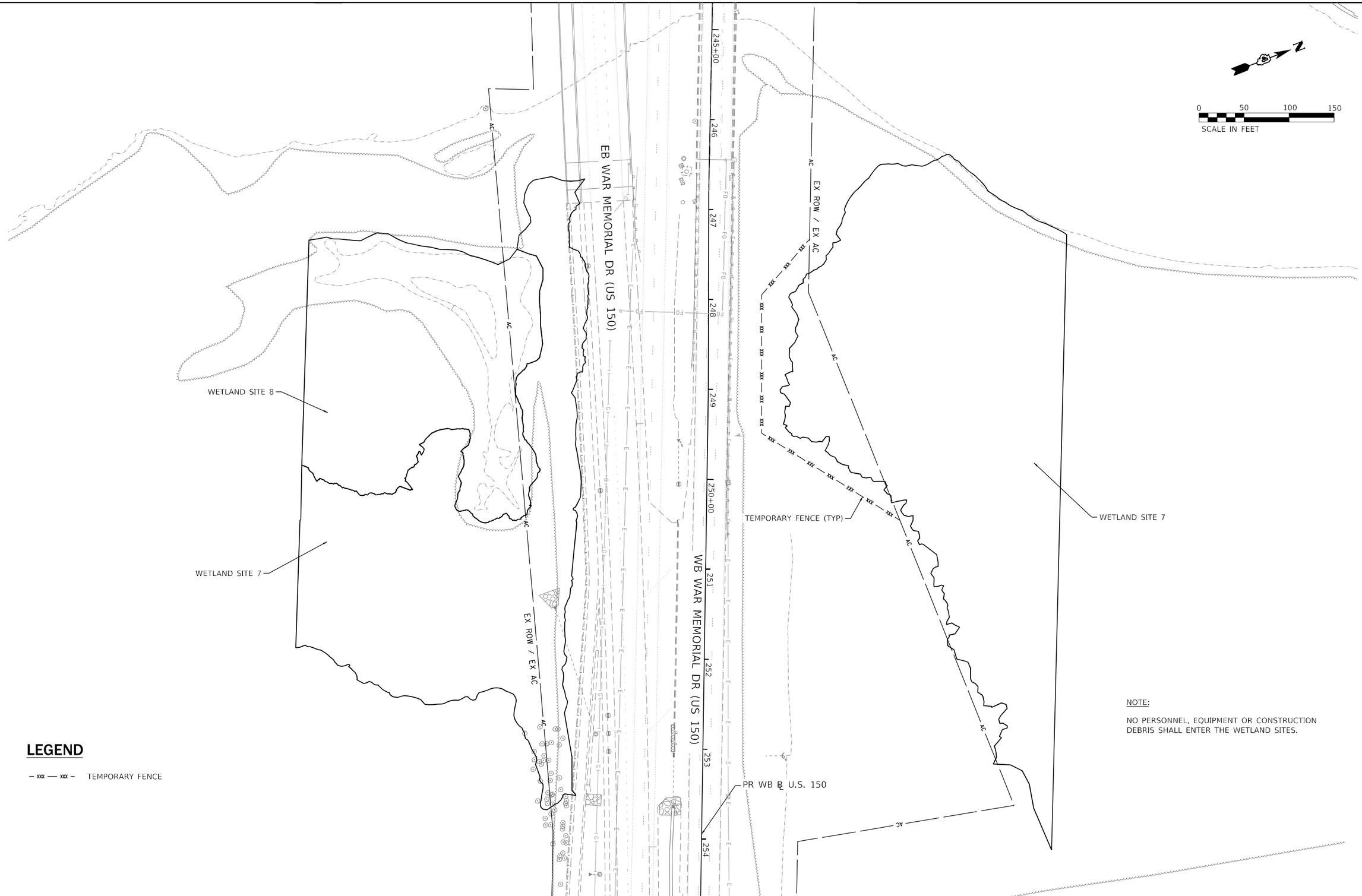

NOTE:

NO PERSONNEL, EQUIPMENT OR CONSTRUCTION DEBRIS SHALL ENTER THE WETLAND SITES.

LEGEND

— xxx — xxx — TEMPORARY FENCE

LIN ENGINEERING,LTD. Consulting Engineers Westmont, Illinois	USER NAME = rober	DESIGNED - NH	REVISED -	STATE OF ILLINOIS DEPARTMENT OF TRANSPORTATION	US 150 WESTBOUND McCLUGAGE BRIDGE PROJECT CONTRACTOR ACCESS / EMERGENCY RIVER ACCESS DETAIL / RESTRICTED CONSTRUCTION AREAS	F.A.P. RTE.	SECTION	COUNTY	TOTAL SHEETS	SHEET NO.
		DRAWN - NH	REVISED -			317	(15B-1)BP,BRR;(14HB-1)BRR	PEORIA/TAZEWELL	418	44
	PLOT SCALE = 100.00 ' / in.	CHECKED - ST	REVISED -					CONTRACT NO. 68E44		
	PLOT DATE = 2/12/2025	DATE - 1/2025	REVISED -		SCALE: 1"=50' SHEET 2 OF 2 SHEETS STA. TO STA.		ILLINOIS	FED. AID PROJECT NHPP-YRP3(905)		

MAINTENANCE OF TRAFFIC GENERAL NOTES

1. THE MAINTENANCE OF TRAFFIC PLANS SHALL SERVE AS A GUIDE FOR THE SAFE DIVERSION OF TRAFFIC DURING THE EXECUTION OF THIS CONTRACT. THE CONTRACTOR MAY MODIFY THE MAINTENANCE OF TRAFFIC PLANS TO MEET CONSTRUCTION NEEDS BUT NOT AT THE EXPENSE OF PUBLIC SAFETY OR CONVENIENCE. ANY CHANGES TO THE TRAFFIC CONTROL PLANS SHALL BE SUBMITTED TO THE ENGINEER FOR APPROVAL.

2. EXISTING PAVEMENT MARKINGS THAT CONFLICT WITH TEMPORARY MARKINGS SHALL BE REMOVED WITHIN 24 HOURS, AS DIRECTED BY THE ENGINEER. THIS WORK SHALL BE PAID FOR AT THE CONTRACT UNIT PRICE PER SQUARE FOOT FOR PAVEMENT MARKING REMOVAL - WATER BLASTING.

3. THE CONTRACTOR IS RESPONSIBLE FOR COORDINATING AND PROVIDING ACCESS POINTS TO THE WORK ZONE. ACCESS POINTS MUST BE APPROVED BY THE ENGINEER PRIOR TO THE INSTALLATION. ANY SIGNING OR ADDITIONAL TRAFFIC CONTROL DEVICES REQUIRED TO PROVIDE CONTRACTOR ACCESS TO THE WORK ZONE SHALL BE CONSIDERED INCLUDED IN THE COST OF TRAFFIC CONTROL AND PROTECTION (SPECIAL).

4. THE CONTRACTOR MUST COORDINATE ROAD CLOSURES WITH THE ENGINEER AT LEAST 2 WEEKS PRIOR TO ANY CLOSURE.

5. SEE STRUCTURAL PLANS FOR WB US 150 BRIDGE REHABILITATION.

6. CHANGEABLE MESSAGE SIGNS SHALL BE INSTALLED ONE WEEK PRIOR TO ALL TRAFFIC STAGE CHANGES ON EACH APPROACH OF THE AFFECTED ROADWAY TO WARN MOTORISTS OF THE UPCOMING EVENT. THE SIGN MESSAGES SHALL BE REVISED ONE WEEK THEREAFTER WITH MESSAGES WARNING TRAFFIC OF POTENTIAL TRAFFIC DELAYS, QUEUING AND/OR WITH MESSAGES NOTIFYING TRAFFIC TO USE ALTERNATE ROUTES. THE SIGN LOCATIONS AND MESSAGES SHALL BE DETERMINED BY THE ENGINEER.

7. USE HIGHWAY STANDARD 701428 TO SET UP AND REMOVE TRAFFIC CONTROL ON EB & WB US 150.

8. THE TRAFFIC CONTROL DETAILS FOR IL 29 IN STAGES 1A & 1B SHALL BE FOLLOWED, AS NECESSARY, FOR INSTALLATION & REMOVAL OF PROTECTIVE SHIELD, REMOVAL OF BRIDGE DECK & PARAPETS, AND CONSTRUCTION OF PROPOSED BRIDGE DECK & PARAPETS. THE USE OF TEMPORARY CONCRETE BARRIER FOR EACH LANE CLOSURE SHALL BE DETERMINED BY THE ENGINEER.

9. IF THE CONTRACTOR ELECTS TO PERFORM ANY WORK REQUIRING WORKERS TO BE ON EXISTING SN 090-0115 BEFORE THE BRIDGE IS CLOSED TO TRAFFIC, THE CONTRACTOR SHALL CLOSE TWO ADJACENT LANES AND PROTECT WORKERS IN ACCORDANCE WITH IDOT SAFETY ENGINEERING POLICY MEMORANDUM SAFETY 4-21. THIS WORK WILL NOT BE PAID FOR SEPARATELY, BUT SHALL BE CONSIDERED INCLUDED IN THE COST OF TRAFFIC CONTROL AND PROTECTION, (SPECIAL). THE CONTRACTOR MAY CLOSE THE MIDDLE LANE ON WB US 150 DURING OFF-PEAK HOURS UTILIZING HIGHWAY STANDARDS 701411 & 701422 AT THE ENTRANCE RAMP FROM IL 116 TO WB US 150, HOWEVER 2 LANES ON WB US 150 WEST OF IL 116 MUST REMAIN OPEN TO TRAFFIC BETWEEN THE HOURS OF 6:00-9:00 A.M. ON WEEKDAYS.

10. SEE THE FOLLOWING SPECIAL PROVISIONS: "WORKING RESTRICTIONS", "TRAFFIC CONTROL PLAN", AND "TRAFFIC CONTROL AND PROTECTION (SPECIAL)."

SUGGESTED SEQUENCE OF CONSTRUCTION

PRE-STAGE

1. ALONG WB US 150, RAMP D, & RAMP C INSTALL TRAFFIC CONTROL DEVICES AS REQUIRED TO CLOSE THE OUTSIDE SHOULDER OF WB US 150 AND THE INSIDE SHOULDER OF RAMPS C & D TO CONSTRUCT THE TEMPORARY RAMP AT THE LOCATION SHOWN ON THE POST-STAGE A STAGING PLANS & TEMPORARY RAMP PLANS & DETAILS.

2. UTILIZING LANE CLOSURES ALONG NB & SB IL 29, DURING THE ALLOWABLE HOURS DETERMINED BY THE ENGINEER, UTILIZE HIGHWAY STANDARD 701601 TO INSTALL TRAFFIC CONTROL DEVICES AS REQUIRED TO CONSTRUCT PROTECTIVE SHIELDING UNDERNEATH S.N. 072-0168 AT LOCATIONS SHOWN ON THE STRUCTURAL PLANS.

STAGE 1A

1. BEFORE BEGINNING ANY WORK IN STAGE 1A, UTILIZE HIGHWAY STANDARD 701422 & 701428 TO CLOSE THE INSIDE LANE OF EB US 150 TO ALLOW FOR INSTALLATION OF TEMPORARY CONCRETE BARRIER THAT WILL DIVIDE EB & WB TRAFFIC ALONG US 150 IN STAGES 1A & 1B.

2. BEFORE BEGINNING ANY WORK IN STAGE 1A, UTILIZE HIGHWAY STANDARD 701422 & 701428 TO CLOSE THE INSIDE LANE OF WB US 150 WEST OF S.N. 072-0168 TO ALLOW FOR INSTALLATION OF TEMPORARY CONCRETE BARRIER THAT WILL DIVIDE EB & WB TRAFFIC ALONG US 150 IN STAGES 1A & 1B.

3. BETWEEN THE HOURS OF 8:00 PM & 6:00 AM ON SUNDAY THRU THURSDAY EVENINGS, REVISE THE RAMP B ENTRANCE TO EB US 150 TO A STOP CONDITION TO ALLOW TRAFFIC ALONG EB US 150 IN THE OPEN OUTSIDE LANE TO SHIFT TO THE SOUTH EDGE OF EB US 150. UTILIZE STOP AHEAD SIGNS (W3-1) & STOP SIGNS (R1-1) ALONG BOTH THE LT AND RT SIDES OF RAMP B. CHANGEABLE MESSAGE SIGNS SHALL BE LOCATED IN THE ISLAND ALONG THE LT SIDE OF RAMP B & AS DIRECTED BY THE ENGINEER TO NOTIFY MOTORISTS THAT ALL TRAFFIC MUST STOP. RAMP E TRAFFIC WILL MERGE WITH EB US 150 TRAFFIC INTO THE OPEN OUTSIDE LANE ALONG EB US 150 SIMILAR TO WHAT IS SHOWN IN THE STAGE 1A/1B STAGING PLANS. INSTALL TEMPORARY CONCRETE BARRIER ALONG THE EB US 150 BRIDGE.

4. INSTALL TRAFFIC CONTROL DEVICES AND TEMPORARY PAVEMENT MARKINGS TO CLOSE THE OUTSIDE LANE OF EB & WB US 150 UTILIZING HIGHWAY STANDARD 701422 & 701428 & SHIFT WB US 150 TRAFFIC ONTO EB US 150 AS SHOWN IN THE STAGE 1A/1B STAGING PLANS FOR US 150.

5. INSTALL TRAFFIC CONTROL DEVICES AND TEMPORARY PAVEMENT MARKINGS TO CLOSE THE OUTSIDE LANES OF IL 29 IN BOTH THE NB & SB DIRECTIONS UTILIZING HIGHWAY STANDARD 701601 & AS SHOWN IN THE STAGE 1A STAGING PLANS.

6. BEGIN REHABILITATION OF THE WB US 150 STRUCTURES OVER THE ILLINOIS RIVER AND IL 29 AS SHOWN IN THE STRUCTURAL PLANS.

7. PERFORM CLEANING AND PAINTING OF STRUCTURES WITHIN THE LIMITS OF THE OUTSIDE LANES OF IL 29 AS SHOWN IN THE STAGE 1A STAGING PLANS AND STRUCTURAL PLANS.

STAGE 1B

1. MAINTAIN WB US 150 TRAFFIC ON EB US 150 AS SHOWN IN THE STAGING PLANS.

2. INSTALL TRAFFIC CONTROL DEVICES AND TEMPORARY PAVEMENT MARKINGS TO CLOSE THE INSIDE LANES OF IL 29 IN BOTH THE NB & SB DIRECTIONS UTILIZING HIGHWAY STANDARD 701601 & AS SHOWN IN THE STAGE 1B STAGING PLANS.

3. COMPLETE REHABILITATION OF THE WB US 150 STRUCTURES OVER THE ILLINOIS RIVER AND IL 29 AS SHOWN IN STRUCTURAL PLANS.

4. PERFORM CLEANING AND PAINTING OF STRUCTURES WITHIN THE LIMITS OF THE INSIDE LANES OF IL 29 AS SHOWN IN THE STAGE 1B STAGING PLANS AND STRUCTURAL PLANS.

5. CONSTRUCT ROADWAY IMPROVEMENTS WEST OF S.N. 072-0168 ALONG WB US 150 AND RAMP D.

6. CONSTRUCT SHOULDER WIDENING IMPROVEMENTS EAST OF THE WB US 150 STRUCTURE OVER THE ILLINOIS RIVER AT LOCATIONS SHOWN ON THE ROADWAY PLANS.

7. CONSTRUCT DRAINAGE IMPROVEMENTS AT LOCATIONS SHOWN ON THE DRAINAGE PLANS.

8. AT THE CONCLUSION OF STAGE 1B, INSTALL TEMPORARY PAVEMENT MARKINGS AT THE LOCATIONS OF PROPOSED PERMANENT PAVEMENT MARKINGS TO OPEN ALL LANES TO TRAFFIC. INSTALL TEMPORARY BARRIER & TEMPORARY ATTENUATOR IN US 150 MEDIAN FROM STA 708+60.32 TO 716+58.28 (ENDS AT EXISTING BARRIER). INSTALL TEMPORARY BARRIER & PERMANENT ATTENUATOR IN US 150 MEDIAN FROM STA 2161+10.97 TO 2163+64.95.

WINTER SHUTDOWN FROM NOVEMBER 20, 2027 TO MARCH 31, 2028

1. THERE SHALL BE NO LANE CLOSURES.

POST-STAGE A

1. ALONG WB US 150, RAMP D, & RAMP C INSTALL TRAFFIC CONTROL DEVICES AS REQUIRED TO CLOSE THE OUTSIDE SHOULDER OF WB US 150 AND THE INSIDE SHOULDER OF RAMPS C & D TO REMOVE THE TEMPORARY RAMP AND RESTORE RAMP D, THE INFIELD AREA, AND THE PAVED DITCH TO THE EXISTING CONDITION AS SHOWN ON THE POST-STAGE A STAGING PLANS & TEMPORARY RAMP PLANS & DETAILS.

2. IF PAINTING WORK IS STILL BEING COMPLETED ON THE STRUCTURE OVER IL 29 AFTER THE 2027/2028 WINTER SHUTDOWN, TRAFFIC CONTROL ON IL 29 SHALL BE AS DETAILED IN THE STAGE 1A AND 1B MAINTENANCE OF TRAFFIC PLANS.

POST-STAGE B

1. INSTALL TRAFFIC CONTROL DEVICES AND TEMPORARY PAVEMENT MARKINGS TO CLOSE THE INSIDE LANE OF EB & WB US 150 UTILIZING HIGHWAY STANDARD 701422 & 701428 & AS SHOWN IN THE POST-STAGE B STAGING & ROADWAY PLANS.

2. CONSTRUCT PAVEMENT TO RESTORE MEDIAN AS WELL AS MEDIAN CONCRETE BARRIER & BARRIER BASE TO CLOSE THE WEST CROSSOVER AS SHOWN IN THE ROADWAY PLANS.

3. REMOVE TEMPORARY GUARDRAIL INSTALLATION EAST OF THE RIVER BRIDGE STRUCTURE ALONG EB US 150.

4. COMPLETE REMAINING CONSTRUCTION, CLEAN-UP, AND PUNCH LIST.

END CONSTRUCTION

1. DURING THE ALLOWABLE HOURS AS DETERMINED BY THE ENGINEER, UTILIZE HIGHWAY STANDARD 701426 TO INSTALL TRAFFIC CONTROL DEVICES AS REQUIRED TO PLACE PERMANENT PAVEMENT MARKINGS, RAISED REFLECTIVE PAVEMENT MARKERS AND RECESSED REFLECTIVE PAVEMENT MARKERS IN ACCORDANCE WITH IDOT DISTRICT 4 STANDARDS, ALONG US 150 AT THE LOCATIONS SHOWN IN THE PLANS.

2. DURING THE ALLOWABLE HOURS AS DETERMINED BY THE ENGINEER, UTILIZE HIGHWAY STANDARD 701427 TO INSTALL TRAFFIC CONTROL DEVICES AS REQUIRED TO PLACE PERMANENT PAVEMENT MARKINGS, RAISED REFLECTIVE PAVEMENT MARKERS AND RECESSED REFLECTIVE PAVEMENT MARKERS IN ACCORDANCE WITH IDOT DISTRICT 4 STANDARDS, ALONG IL 29 AT THE LOCATIONS SHOWN IN THE PLANS.

3. REMOVE ALL CONSTRUCTION SIGNS AND TRAFFIC CONTROL MEASURES.

4. UNCOVER ALL PERMANENT SIGNS.

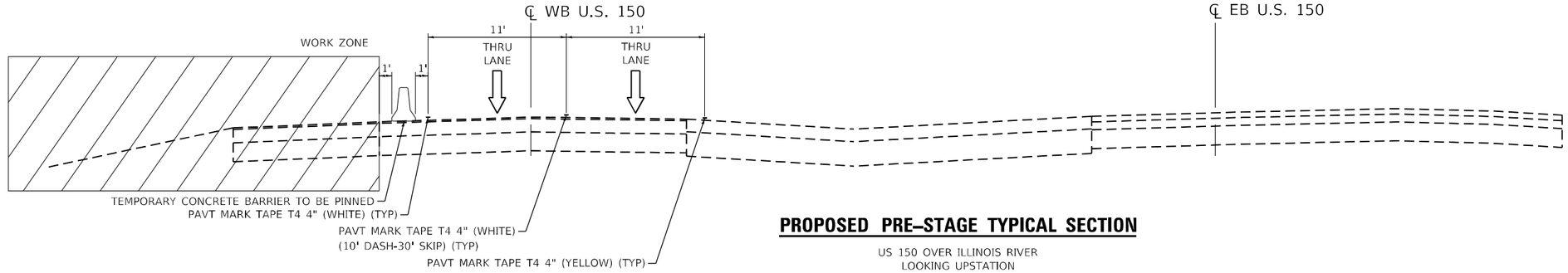

PROPOSED PRE-STAGE TYPICAL SECTION

US 150 OVER ILLINOIS RIVER
LOOKING UPSTATION

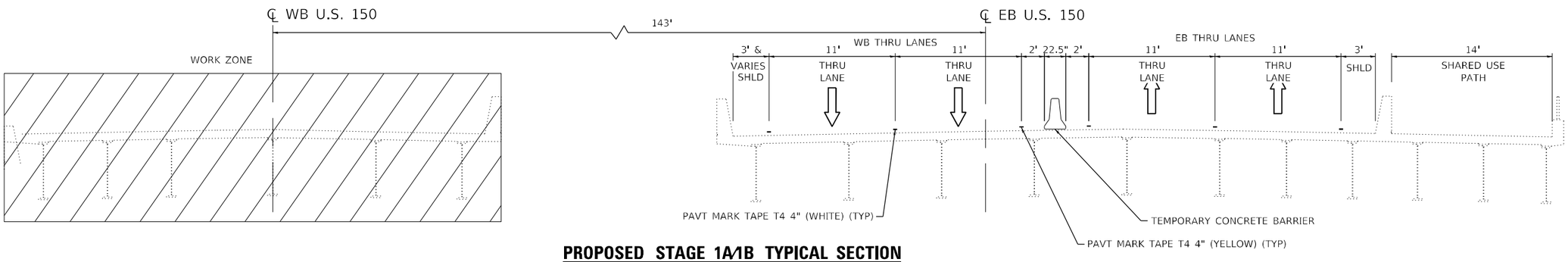

PROPOSED STAGE 1A/1B TYPICAL SECTION

US 150 OVER ILLINOIS RIVER
LOOKING UPSTATION

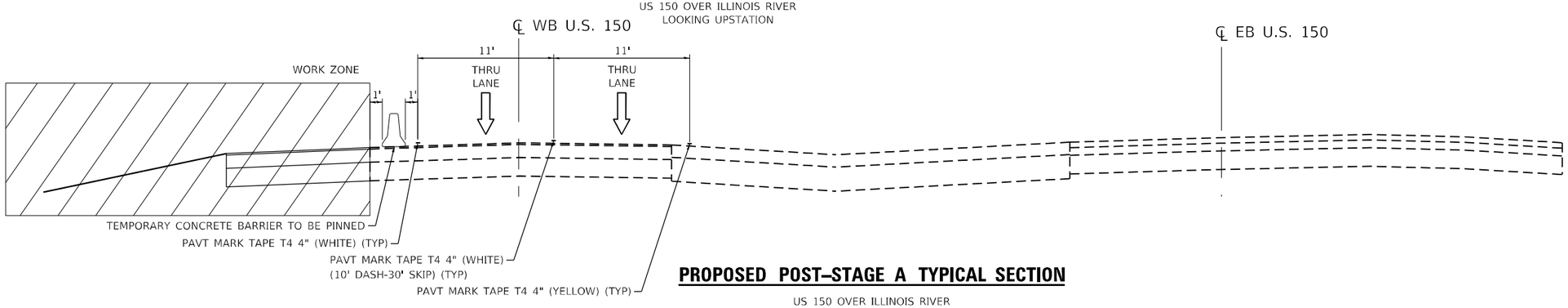

PROPOSED POST-STAGE A TYPICAL SECTION

US 150 OVER ILLINOIS RIVER
LOOKING UPSTATION

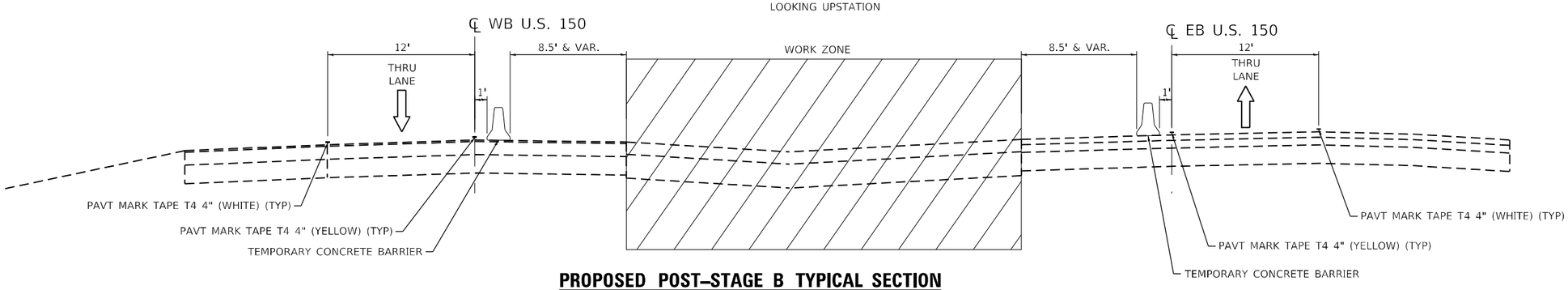

PROPOSED POST-STAGE B TYPICAL SECTION

US 150 OVER ILLINOIS RIVER
LOOKING UPSTATION

LIN ENGINEERING,LTD. Consulting Engineers Westmont, Illinois	USER NAME = jkehn	DESIGNED - JK	REVISED -	STATE OF ILLINOIS DEPARTMENT OF TRANSPORTATION	US 150 WESTBOUND McCLUGAGE BRIDGE PROJECT MAINTENANCE OF TRAFFIC TYPICAL SECTIONS	F.A.P. RTE.	SECTION	COUNTY	TOTAL SHEETS / SHEET NO.
		DRAWN - JK	REVISED -			317	(15B-1)BP,BRR:(14HB-1)BRR	PEORIA/TAZEWELL	418 / 46
	PLOT SCALE = 10.0000 ' / in.	CHECKED - RC	REVISED -					CONTRACT NO. 68E44	
	PLOT DATE = 1/14/2025	DATE - 1/2025	REVISED -		SCALE: N.T.S. SHEET 2 OF 20 SHEETS STA. TO STA.		ILLINOIS	FED. AID PROJECT	

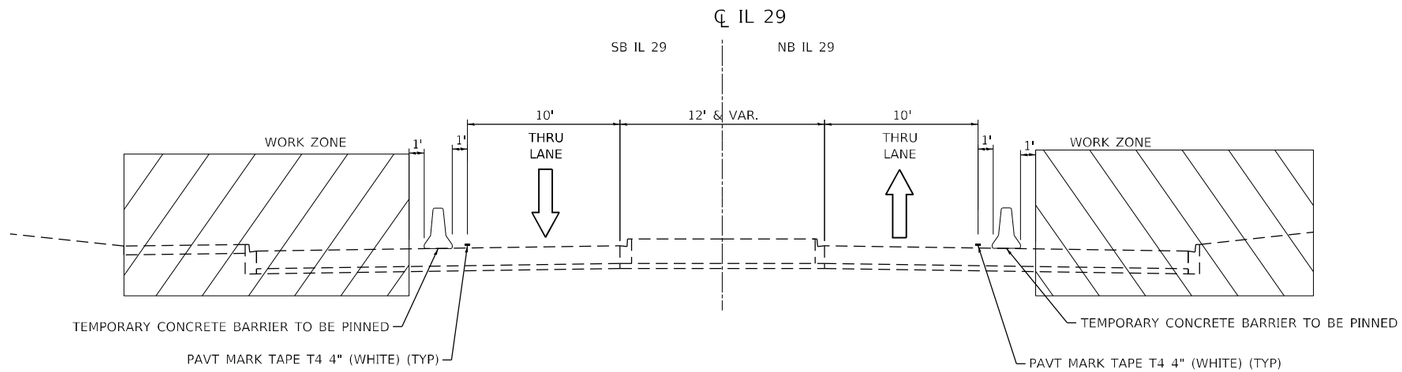

IL 29 STAGING TYPICAL SECTION (STAGE 1A)

IL 29 UNDER US 150
LOOKING UPSTATION

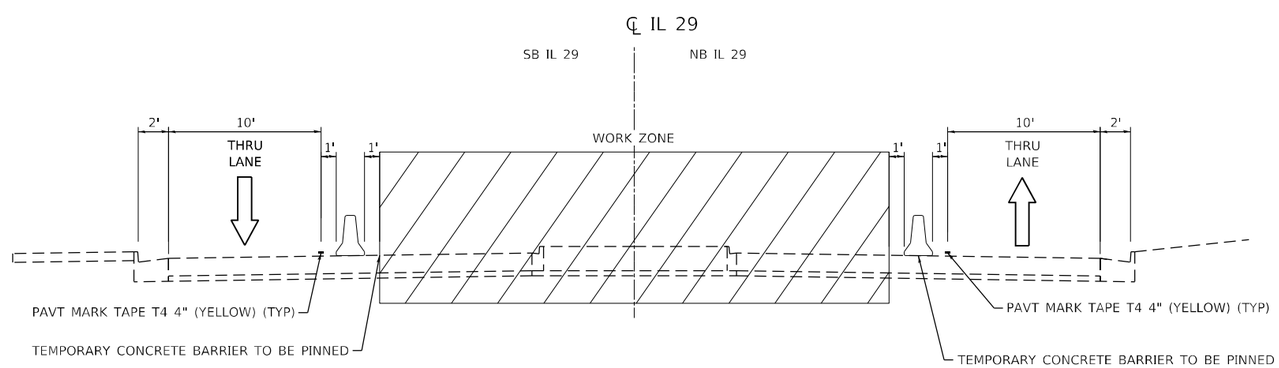

IL 29 STAGING TYPICAL SECTION (STAGE 1B)

IL 29 UNDER US 150
LOOKING UPSTATION

LIN ENGINEERING,LTD. Consulting Engineers Westmont, Illinois	USER NAME = jkeinn	DESIGNED - JK	REVISED -	STATE OF ILLINOIS DEPARTMENT OF TRANSPORTATION	US 150 WESTBOUND McCLUGAGE BRIDGE PROJECT MAINTENANCE OF TRAFFIC TYPICAL SECTIONS	F.A.P. RTE.	SECTION	COUNTY	TOTAL SHEETS	SHEET NO.
		DRAWN - JK	REVISED -			317	(15B-1)BP,BRR;(14HB-1)BRR	PEORIA/TAZEWELL	418	47
	PLOT SCALE = 10.0000 ' / in.	CHECKED - RC	REVISED -					CONTRACT NO. 68E44		
	PLOT DATE = 1/14/2025	DATE - 1/2025	REVISED -		SCALE: N.T.S. / SHEET 3 OF 20 SHEETS / STA. / TO STA.		ILLINOIS	FED. AID PROJECT		

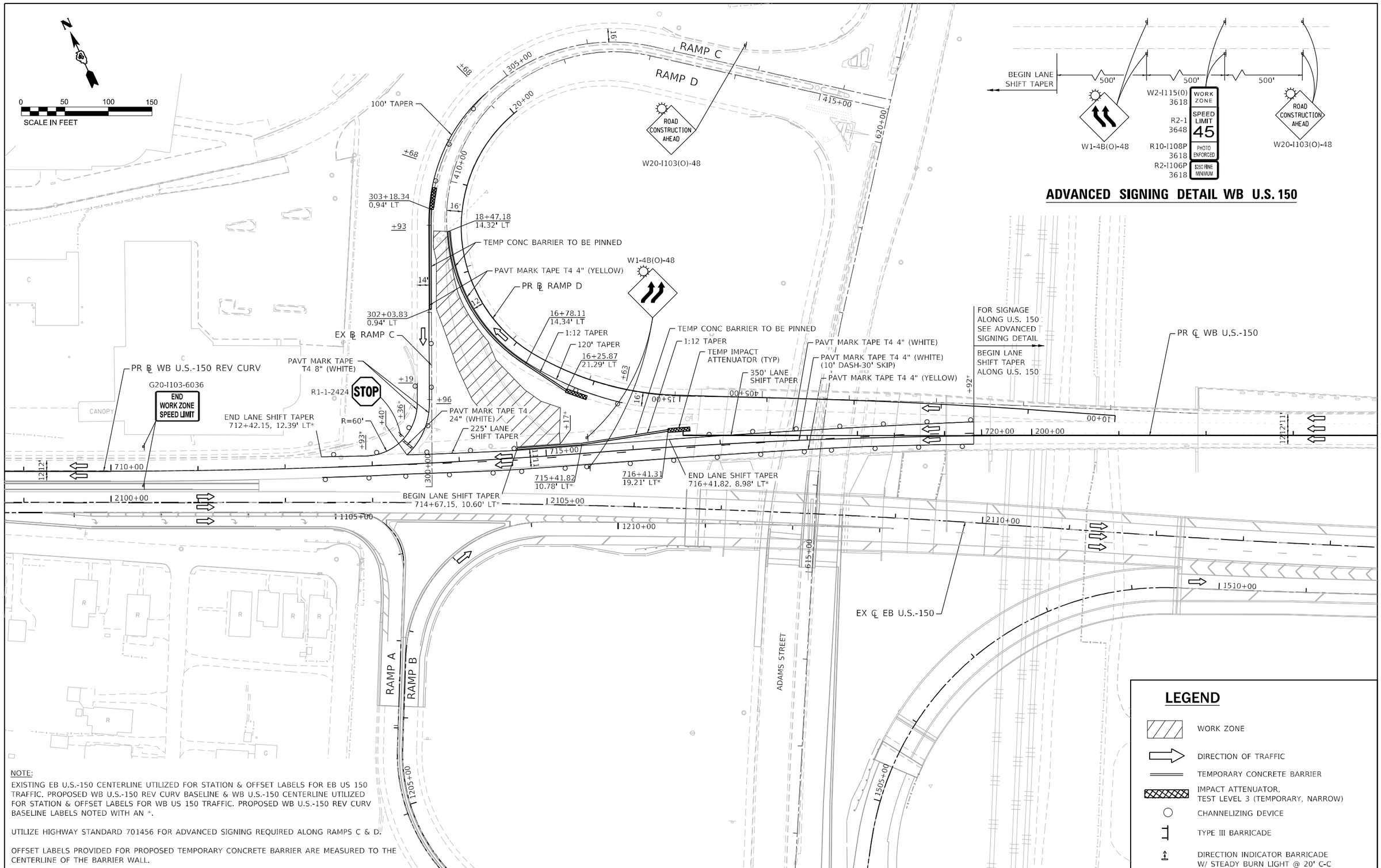

ADVANCED SIGNING DETAIL WB U.S. 150

NOTE:

EXISTING EB U.S.-150 CENTERLINE UTILIZED FOR STATION & OFFSET LABELS FOR EB US 150 TRAFFIC. PROPOSED WB U.S.-150 REV CURV BASELINE & WB U.S.-150 CENTERLINE UTILIZED FOR STATION & OFFSET LABELS FOR WB US 150 TRAFFIC. PROPOSED WB U.S.-150 REV CURV BASELINE LABELS NOTED WITH AN *.

UTILIZE HIGHWAY STANDARD 701456 FOR ADVANCED SIGNING REQUIRED ALONG RAMPS C & D.

OFFSET LABELS PROVIDED FOR PROPOSED TEMPORARY CONCRETE BARRIER ARE MEASURED TO THE CENTERLINE OF THE BARRIER WALL.

LEGEND

- WORK ZONE
- DIRECTION OF TRAFFIC
- TEMPORARY CONCRETE BARRIER
- IMPACT ATTENUATOR, TEST LEVEL 3 (TEMPORARY, NARROW)
- CHANNELIZING DEVICE
- TYPE III BARRICADE
- DIRECTION INDICATOR BARRICADE W/ STEADY BURN LIGHT @ 20' C-C

LIN ENGINEERING,LTD.
Consulting Engineers
Westmont, Illinois

USER NAME = jkenn	DESIGNED - JK	REVISED -	
	DRAWN - JK	REVISED -	
PLOT SCALE = 100.0000 ' / in.	CHECKED - ST	REVISED -	
PLOT DATE = 1/14/2025	DATE - 1/2025	REVISED -	

STATE OF ILLINOIS
DEPARTMENT OF TRANSPORTATION

US 150 WESTBOUND McCLUGAGE BRIDGE PROJECT
MAINTENANCE OF TRAFFIC PLANS PRE-STAGE

SCALE: 1"=50' | SHEET 4 OF 20 SHEETS | STA. 712+42 TO STA. 719+92

F.A.P. RTE.	SECTION	COUNTY	TOTAL SHEETS	SHEET NO.
317	(15B-1)BP,BRR;(14HB-1)BRR	PEORIA/TAZEWELL	418	48
		CONTRACT NO. 68E44		
		ILLINOIS FED. AID PROJECT		

RUPPMAN PLAZA

N HARVARD AVE

E HARVARD AVE

WB U.S. 150

EB U.S. 150

1030+00

1035+00

12' 12' 12' 12' 12' 12'

PR ℄ WB U.S.-150 REV CURV

700+00

2090+00

+00

+89

+09

18'

12'

EX ℄ EB U.S.-150

MATCHLINE STA. 2093+00.00

N:1478747.83
E:2464025.28
BEGIN LANE CLOSURE
ALONG U.S. 150

FOR SIGNAGE
ALONG U.S. 150
SEE ADVANCED
SIGNING DETAIL

540' TAPER

PAVT MARK TAPE T4 4" (WHITE)

DRUMS @ 20' C-C (TYP)

PAVT MARK TAPE T4 8" (WHITE)

PAVT MARK TAPE T4 8" (WHITE)

NOTE:

EXISTING EB U.S.-150 CENTERLINE UTILIZED FOR STATION & OFFSET LABELS FOR EB US 150 TRAFFIC. PROPOSED WB U.S.-150 REV CURV BASELINE & WB U.S.-150 CENTERLINE UTILIZED FOR STATION & OFFSET LABELS FOR WB US 150 TRAFFIC. PROPOSED WB U.S.-150 REV CURV BASELINE LABELS NOTED WITH AN *.

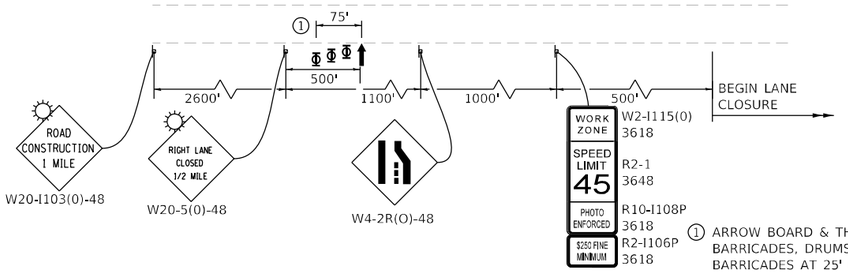

1 ARROW BOARD & THREE, TYPE II BARRICADES, DRUMS, OR VERTICAL BARRICADES AT 25' CENTERS.

ADVANCED SIGNING DETAIL EB U.S. 150

LEGEND

- WORK ZONE
- DIRECTION OF TRAFFIC
- TEMPORARY CONCRETE BARRIER
- IMPACT ATTENUATOR, TEST LEVEL 3 (TEMPORARY, NARROW)
- CHANNELIZING DEVICE
- TYPE III BARRICADE
- DIRECTION INDICATOR BARRICADE W/ STEADY BURN LIGHT @ 20' C-C

LIN ENGINEERING,LTD. Consulting Engineers Westmont, Illinois	USER NAME = jkeinn	DESIGNED - JK	REVISED -
		DRAWN - JK	REVISED -
	PLOT SCALE = 100.0000 ' / in.	CHECKED - ST	REVISED -
	PLOT DATE = 1/14/2025	DATE - 1/2025	REVISED -

STATE OF ILLINOIS
DEPARTMENT OF TRANSPORTATION

US 150 WESTBOUND McCLUGAGE BRIDGE PROJECT
MAINTENANCE OF TRAFFIC PLANS STAGE 1A/1B

SCALE: 1"=50' | SHEET 5 OF 20 SHEETS | STA. 2090+00 TO STA. 2093+00

F.A.P. RTE.	SECTION	COUNTY	TOTAL SHEETS	SHEET NO.
317	(15B-1)BP,BRR;(14HB-1)BRR	PEORIA/TAZEWELL	418	49

CONTRACT NO. 68E44

ILLINOIS | FED. AID PROJECT

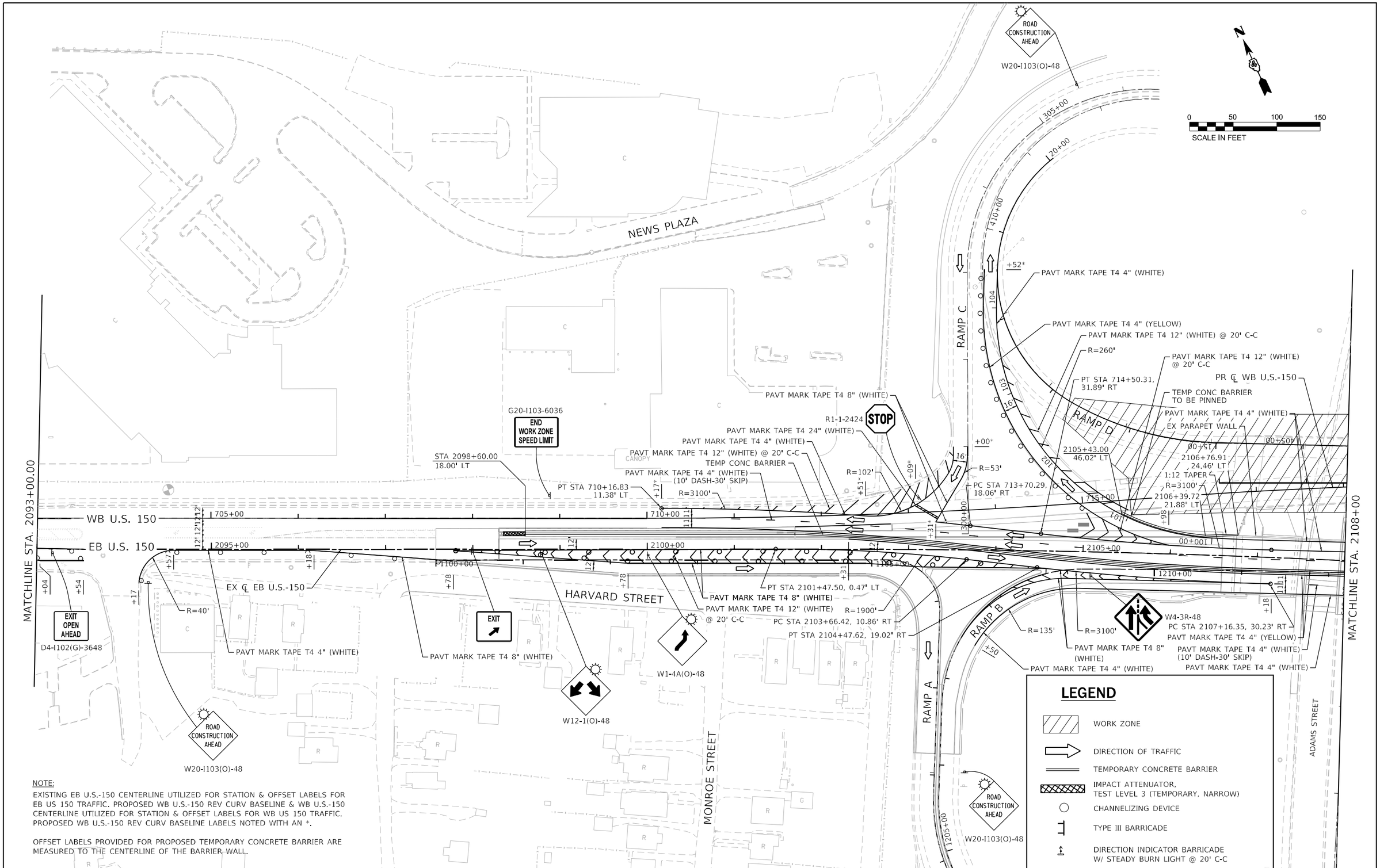

NOTE:

EXISTING EB U.S.-150 CENTERLINE UTILIZED FOR STATION & OFFSET LABELS FOR EB US 150 TRAFFIC. PROPOSED WB U.S.-150 REV CURV BASELINE & WB U.S.-150 CENTERLINE UTILIZED FOR STATION & OFFSET LABELS FOR WB US 150 TRAFFIC. PROPOSED WB U.S.-150 REV CURV BASELINE LABELS NOTED WITH AN *.

OFFSET LABELS PROVIDED FOR PROPOSED TEMPORARY CONCRETE BARRIER ARE MEASURED TO THE CENTERLINE OF THE BARRIER WALL.

LIN ENGINEERING,LTD. Consulting Engineers Westmont, Illinois	USER NAME = jkeinn	DESIGNED - JK	REVISED -	STATE OF ILLINOIS DEPARTMENT OF TRANSPORTATION	US 150 WESTBOUND McCLUGAGE BRIDGE PROJECT MAINTENANCE OF TRAFFIC PLANS STAGE 1A/1B	F.A.P. RTE.	SECTION	COUNTY	TOTAL SHEETS / SHEET NO.
		DRAWN - JK	REVISED -			317	(15B-1)BP,BRR;(14HB-1)BRR	PEORIA/TAZEWELL	418 / 50
	PLOT SCALE = 100.0000 ' / in.	CHECKED - ST	REVISED -			CONTRACT NO. 68E44			
	PLOT DATE = 1/14/2025	DATE - 1/2025	REVISED -		SCALE: 1"=50' SHEET 6 OF 20 SHEETS STA. 2093+00 TO STA. 2108+00	ILLINOIS FED. AID PROJECT			

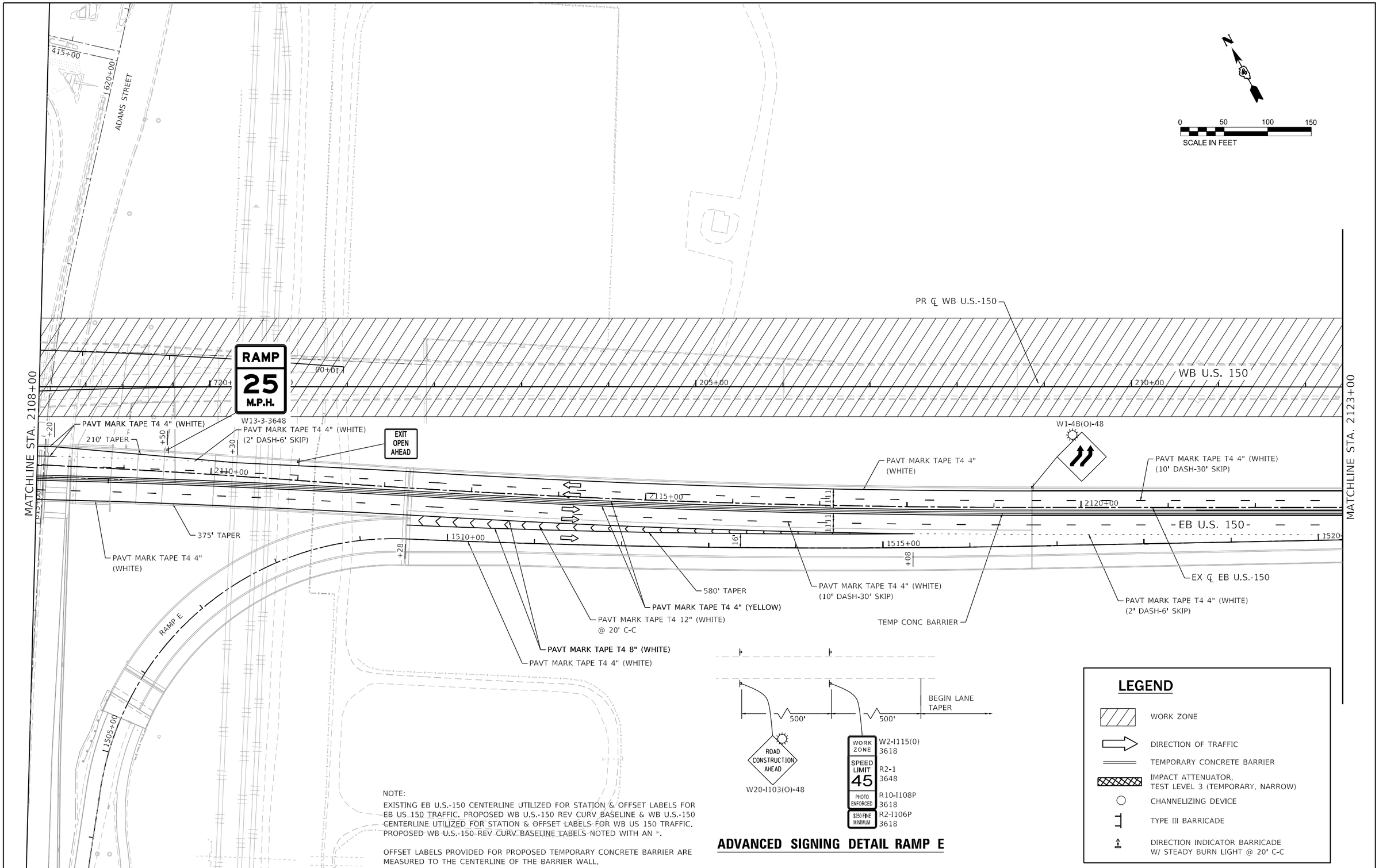

NOTE:

EXISTING EB U.S.-150 CENTERLINE UTILIZED FOR STATION & OFFSET LABELS FOR EB US 150 TRAFFIC. PROPOSED WB U.S.-150 REV CURV BASELINE & WB U.S.-150 CENTERLINE UTILIZED FOR STATION & OFFSET LABELS FOR WB US 150 TRAFFIC. PROPOSED WB U.S.-150 REV CURV BASELINE LABELS NOTED WITH AN *.

OFFSET LABELS PROVIDED FOR PROPOSED TEMPORARY CONCRETE BARRIER ARE MEASURED TO THE CENTERLINE OF THE BARRIER WALL.

ADVANCED SIGNING DETAIL RAMP E

LIN ENGINEERING,LTD.
Consulting Engineers
Westmont, Illinois

USER NAME = jkeinn	DESIGNED - JK	REVISED -	
	DRAWN - JK	REVISED -	
PLOT SCALE = 100.0000 ' / in.	CHECKED - ST	REVISED -	
PLOT DATE = 1/14/2025	DATE - 1/2025	REVISED -	

STATE OF ILLINOIS
DEPARTMENT OF TRANSPORTATION

US 150 WESTBOUND McCLUGAGE BRIDGE PROJECT
MAINTENANCE OF TRAFFIC PLANS STAGE 1A/1B

SCALE: 1"=50' | SHEET 7 OF 20 SHEETS | STA. 2108+00 TO STA. 2123+00

F.A.P. RTE.	SECTION	COUNTY	TOTAL SHEETS	SHEET NO.
317	(15B-1)BP,BRR:(14HB-1)BRR	PEORIA/TAZEWELL	418	51

CONTRACT NO. 68E44

ILLINOIS | FED. AID PROJECT

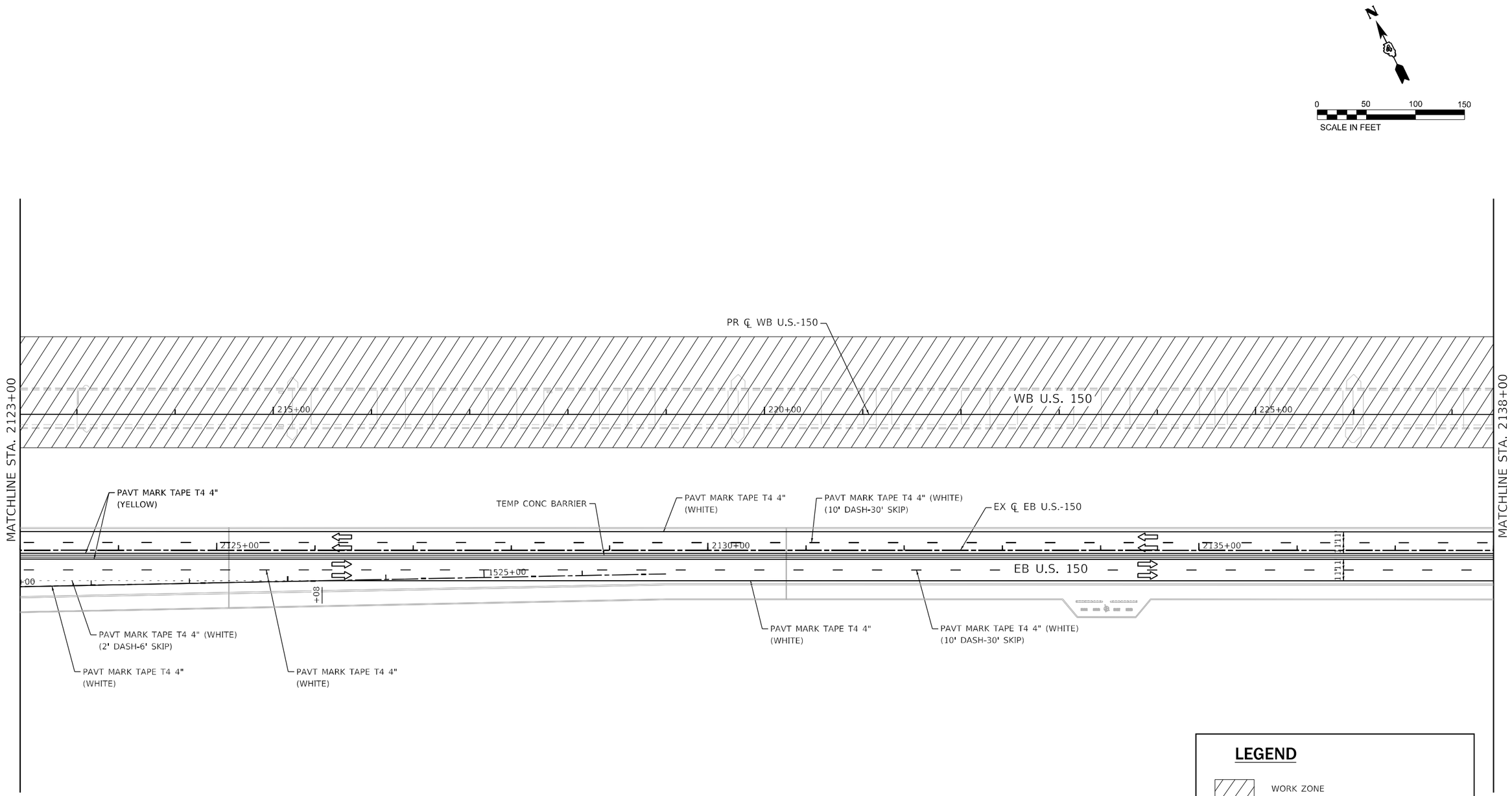

LEGEND

- WORK ZONE
- DIRECTION OF TRAFFIC
- TEMPORARY CONCRETE BARRIER
- IMPACT ATTENUATOR, TEST LEVEL 3 (TEMPORARY, NARROW)
- CHANNELIZING DEVICE
- TYPE III BARRICADE
- DIRECTION INDICATOR BARRICADE W/ STEADY BURN LIGHT @ 20' C-C

NOTE:

EXISTING EB U.S.-150 CENTERLINE UTILIZED FOR STATION & OFFSET LABELS FOR EB US 150 TRAFFIC. PROPOSED WB U.S.-150 REV CURV BASELINE & WB U.S.-150 CENTERLINE UTILIZED FOR STATION & OFFSET LABELS FOR WB US 150 TRAFFIC. PROPOSED WB U.S.-150 REV CURV BASELINE LABELS NOTED WITH AN ^.

OFFSET LABELS PROVIDED FOR PROPOSED TEMPORARY CONCRETE BARRIER ARE MEASURED TO THE CENTERLINE OF THE BARRIER WALL.

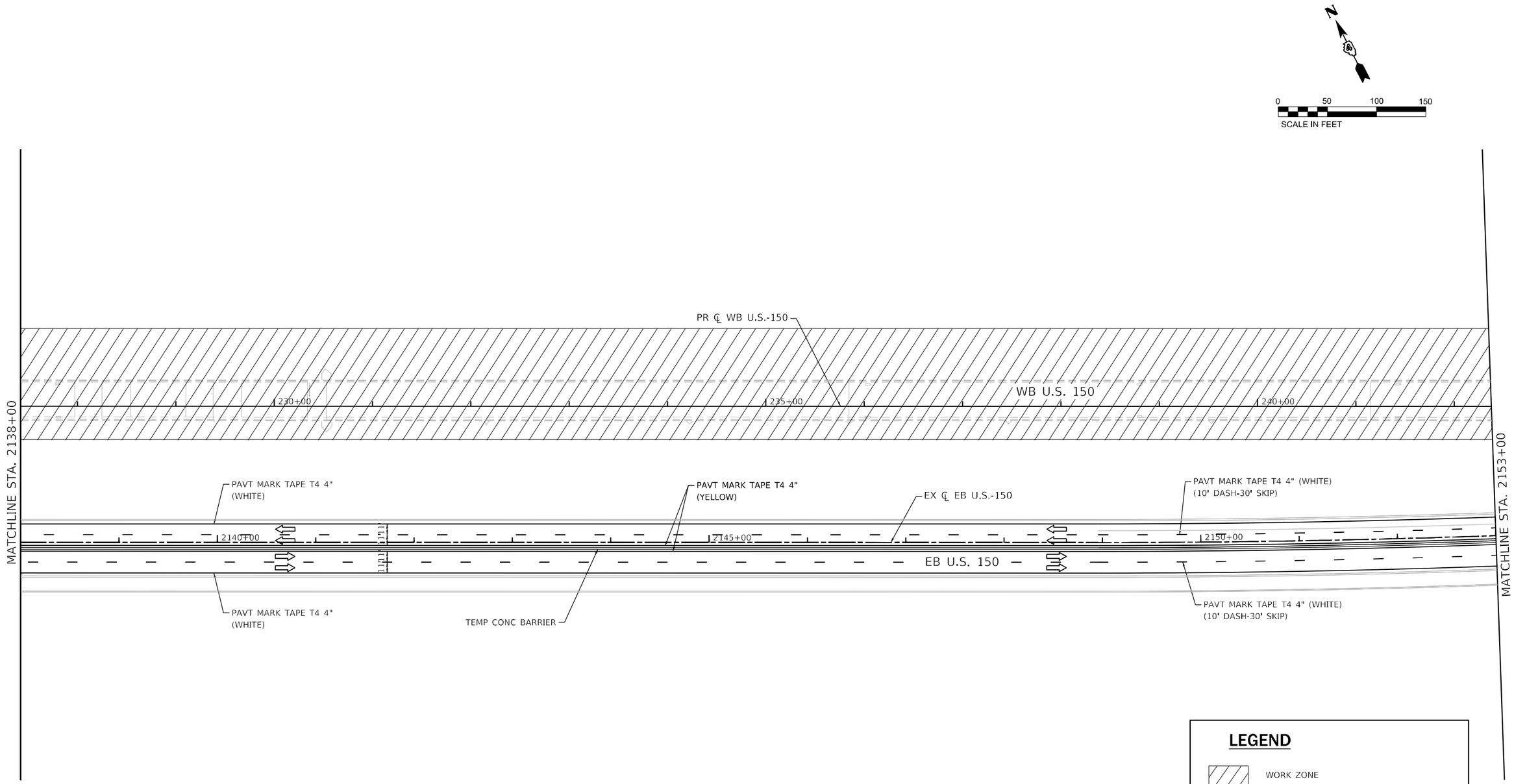

LEGEND

- WORK ZONE
- DIRECTION OF TRAFFIC
- TEMPORARY CONCRETE BARRIER
- IMPACT ATTENUATOR, TEST LEVEL 3 (TEMPORARY, NARROW)
- CHANNELIZING DEVICE
- TYPE III BARRICADE
- DIRECTION INDICATOR BARRICADE W/ STEADY BURN LIGHT @ 20' C-C

NOTE:

EXISTING EB U.S.-150 CENTERLINE UTILIZED FOR STATION & OFFSET LABELS FOR EB US 150 TRAFFIC. PROPOSED WB U.S.-150 REV CURV BASELINE & WB U.S.-150 CENTERLINE UTILIZED FOR STATION & OFFSET LABELS FOR WB US 150 TRAFFIC. PROPOSED WB U.S.-150 REV CURV BASELINE LABELS NOTED WITH AN *.

OFFSET LABELS PROVIDED FOR PROPOSED TEMPORARY CONCRETE BARRIER ARE MEASURED TO THE CENTERLINE OF THE BARRIER WALL.

LIN ENGINEERING,LTD. Consulting Engineers Westmont, Illinois	USER NAME = jkehn	DESIGNED - JK	REVISED -	STATE OF ILLINOIS DEPARTMENT OF TRANSPORTATION	US 150 WESTBOUND McCLUGAGE BRIDGE PROJECT MAINTENANCE OF TRAFFIC PLANS STAGE 1A/1B	F.A.P. RTE.	SECTION	COUNTY	TOTAL SHEETS	SHEET NO.
		DRAWN - JK	REVISED -			317	(15B-1)BP,BRR;(14HB-1)BRR	PEORIA/TAZEWELL	418	53
	PLOT SCALE = 100.0000 ' / in.	CHECKED - ST	REVISED -					CONTRACT NO. 68E44		
	PLOT DATE = 1/14/2025	DATE - 1/2025	REVISED -		SCALE: 1"=50' SHEET 9 OF 20 SHEETS STA. 2138+00 TO STA. 2153+00		ILLINOIS	FED. AID PROJECT		

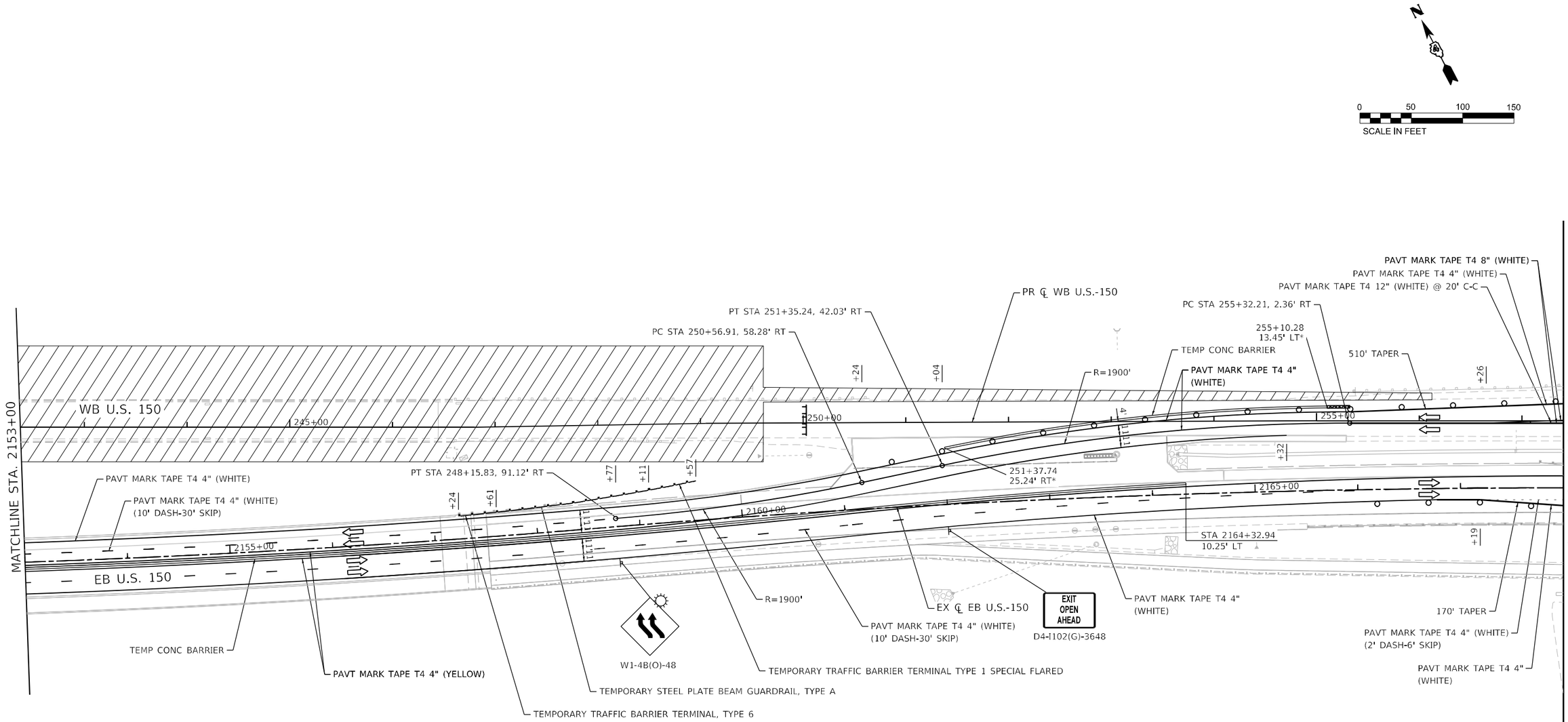

LEGEND

- WORK ZONE
- DIRECTION OF TRAFFIC
- TEMPORARY CONCRETE BARRIER
- IMPACT ATTENUATOR, TEST LEVEL 3 (TEMPORARY, NARROW)
- CHANNELIZING DEVICE
- TYPE III BARRICADE
- DIRECTION INDICATOR BARRICADE W/ STEADY BURN LIGHT @ 20' C-C

NOTE:

EXISTING EB U.S.-150 CENTERLINE UTILIZED FOR STATION & OFFSET LABELS FOR EB US 150 TRAFFIC. PROPOSED WB U.S.-150 REV CURV BASELINE & WB U.S.-150 CENTERLINE UTILIZED FOR STATION & OFFSET LABELS FOR WB US 150 TRAFFIC. PROPOSED WB U.S.-150 REV CURV BASELINE LABELS NOTED WITH AN *.

OFFSET LABELS PROVIDED FOR PROPOSED TEMPORARY CONCRETE BARRIER ARE MEASURED TO THE CENTERLINE OF THE BARRIER WALL.

LIN ENGINEERING,LTD. Consulting Engineers Westmont, Illinois	USER NAME = jkeinn	DESIGNED - JK	REVISED -
		DRAWN - JK	REVISED -
	PLOT SCALE = 100.0000 ' / in.	CHECKED - ST	REVISED -
	PLOT DATE = 1/14/2025	DATE - 1/2025	REVISED -

STATE OF ILLINOIS
DEPARTMENT OF TRANSPORTATION

US 150 WESTBOUND McCLUGAGE BRIDGE PROJECT
MAINTENANCE OF TRAFFIC PLANS STAGE 1A/1B

SCALE: 1"=50' | SHEET 10 OF 20 SHEETS | STA. 2153+00 TO STA. 2168+00

F.A.P. RTE.	SECTION	COUNTY	TOTAL SHEETS	SHEET NO.
317	(15B-1)BP,BRR:(14HB-1)BRR	PEORIA/TAZEWELL	418	54

CONTRACT NO. 68E44

ILLINOIS | FED. AID PROJECT

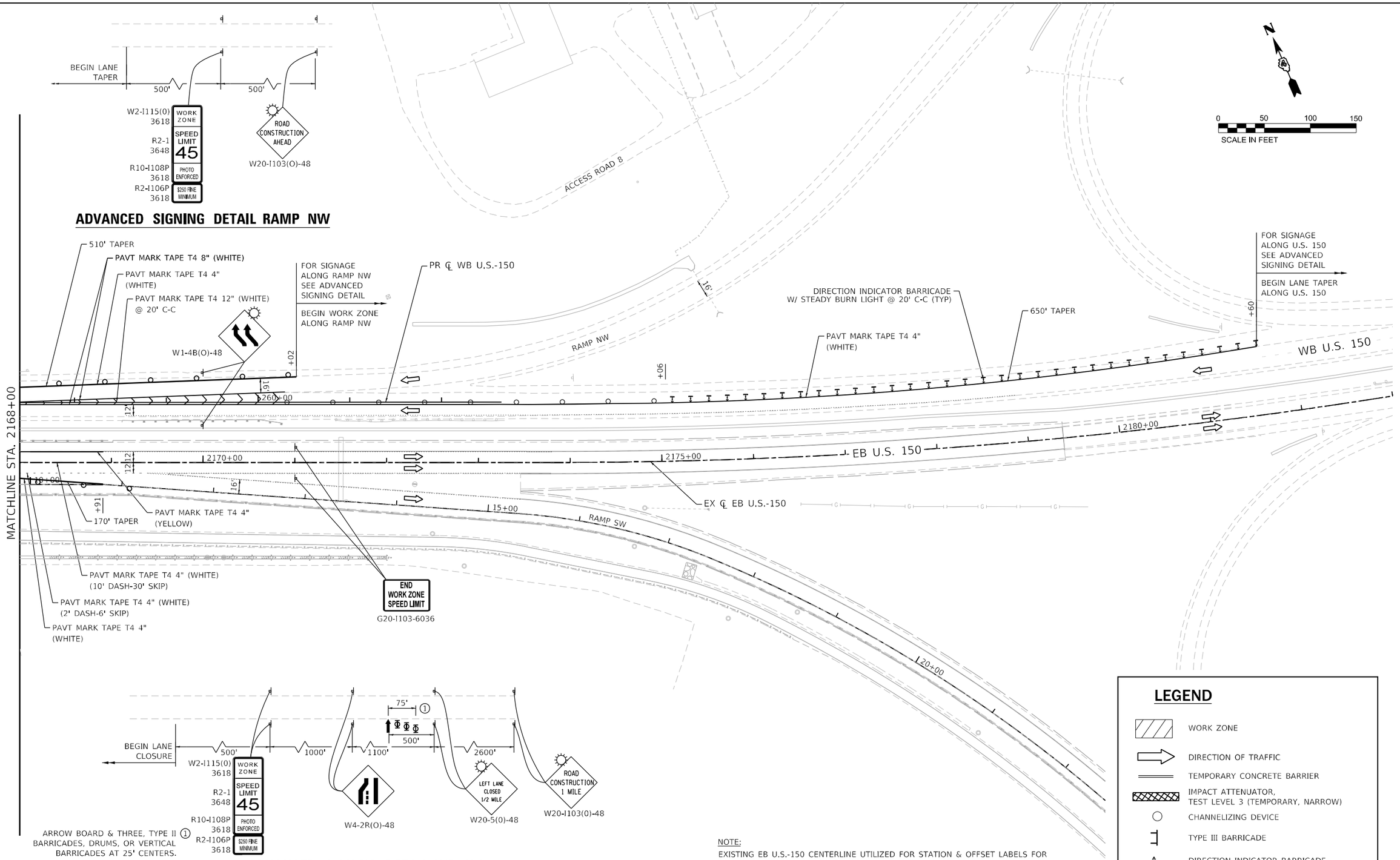

ADVANCED SIGNING DETAIL WB U.S. 150

NOTE:
EXISTING EB U.S.-150 CENTERLINE UTILIZED FOR STATION & OFFSET LABELS FOR EB US 150 TRAFFIC. PROPOSED WB U.S.-150 REV CURV BASELINE & WB U.S.-150 CENTERLINE UTILIZED FOR STATION & OFFSET LABELS FOR WB US 150 TRAFFIC. PROPOSED WB U.S.-150 REV CURV BASELINE LABELS NOTED WITH AN *.

LEGEND

- WORK ZONE
- DIRECTION OF TRAFFIC
- TEMPORARY CONCRETE BARRIER
- IMPACT ATTENUATOR, TEST LEVEL 3 (TEMPORARY, NARROW)
- CHANNELIZING DEVICE
- TYPE III BARRICADE
- DIRECTION INDICATOR BARRICADE W/ STEADY BURN LIGHT @ 20' C-C

LIN ENGINEERING,LTD. Consulting Engineers Westmont, Illinois	USER NAME = jkeinn	DESIGNED - JK	REVISED -	STATE OF ILLINOIS DEPARTMENT OF TRANSPORTATION	US 150 WESTBOUND McCLUGAGE BRIDGE PROJECT MAINTENANCE OF TRAFFIC PLANS STAGE 1A/1B
		DRAWN - JK	REVISED -		
	PLOT SCALE = 100.0000 ' / in.	CHECKED - ST	REVISED -		
	PLOT DATE = 1/14/2025	DATE - 1/2025	REVISED -		SCALE: 1"=50' SHEET 11 OF 20 SHEETS STA. 2168+00 TO STA. 2183+00

F.A.P. RTE.	SECTION	COUNTY	TOTAL SHEETS	SHEET NO.
317	(15B-1)BP,BRR:(14HB-1)BRR	PEORIA/TAZEWELL	418	55
		CONTRACT NO. 68E44		
	ILLINOIS	FED. AID PROJECT		

NOTE:
OFFSET LABELS PROVIDED FOR PROPOSED TEMPORARY CONCRETE BARRIER ARE MEASURED TO THE CENTERLINE OF THE BARRIER WALL.

0 50 100 150
SCALE IN FEET

RAMP A
RAMP B
RAMP D
RAMP E
EB U.S. 150
WB U.S. 150
EX ℄ IL 29
SB IL 29
NB IL 29
1205+00
1110+00
1210+00
1200+00
2105+00
1400+00
1505+00
1500+00
610+00
615+00
1510+00
2110+00
720+00
200+00
100+00
G20-I103-6036
END WORK ZONE SPEED LIMIT
300' TAPER
290' TAPER
175' TAPER
616+26.24
24.21' LT
616+10.99
17.41' RT
615+11.74
19.84' RT
617+13.68
19.52' RT
618+23.30
25.83' LT
617+28.59
22.26' LT
PAVT MARK TAPE T4 4" (WHITE-3' DASH, 9' SKIP)
PAVT MARK TAPE T4 4" (WHITE)
TEMP CONC BARRIER TO BE PINNED, 200.0 LF
TAPER 8:1
PAVT MARK TAPE T4 4" (WHITE)
DIRECTION INDICATOR BARRICADE W/ STEADY BURN LIGHT @ 20' C-C (TYP)
TAPER 8:1
TEMP CONC BARRIER TO BE PINNED, 200.0 LF
BEGIN LANE CLOSURE ALONG IL 29
FOR SIGNAGE ALONG IL 29 SEE ADVANCED SIGNING DETAIL
MATCHLINE STA. 619+00.00

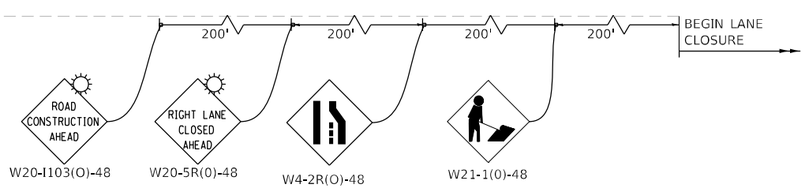

ADVANCED SIGNING DETAIL

LEGEND

- WORK ZONE
- DIRECTION OF TRAFFIC
- TEMPORARY CONCRETE BARRIER
- IMPACT ATTENUATOR, TEST LEVEL 2 (TEMPORARY, NARROW)
- CHANNELIZING DEVICE
- TYPE III BARRICADE
- DIRECTION INDICATOR BARRICADE W/ STEADY BURN LIGHT @ 20' C-C

LIN ENGINEERING,LTD. Consulting Engineers Westmont, Illinois	USER NAME = jkeinn	DESIGNED - JK	REVISED -
		DRAWN - JK	REVISED -
	PLOT SCALE = 100.0000 ' / in.	CHECKED - ST	REVISED -
	PLOT DATE = 1/14/2025	DATE - 1/2025	REVISED -

STATE OF ILLINOIS
DEPARTMENT OF TRANSPORTATION

US 150 WESTBOUND McCLUGAGE BRIDGE PROJECT
MAINTENANCE OF TRAFFIC PLANS STAGE 1A

SCALE: 1"=50' | SHEET 12 OF 20 SHEETS | STA. 606+52.60 TO STA. 619+00.00

F.A.P. RTE.	SECTION	COUNTY	TOTAL SHEETS	SHEET NO.
317	(15B-1)BP,BRR;(14HB-1)BRR	PEORIA/TAZEWELL	418	56

CONTRACT NO. 68E44

ILLINOIS | FED. AID PROJECT

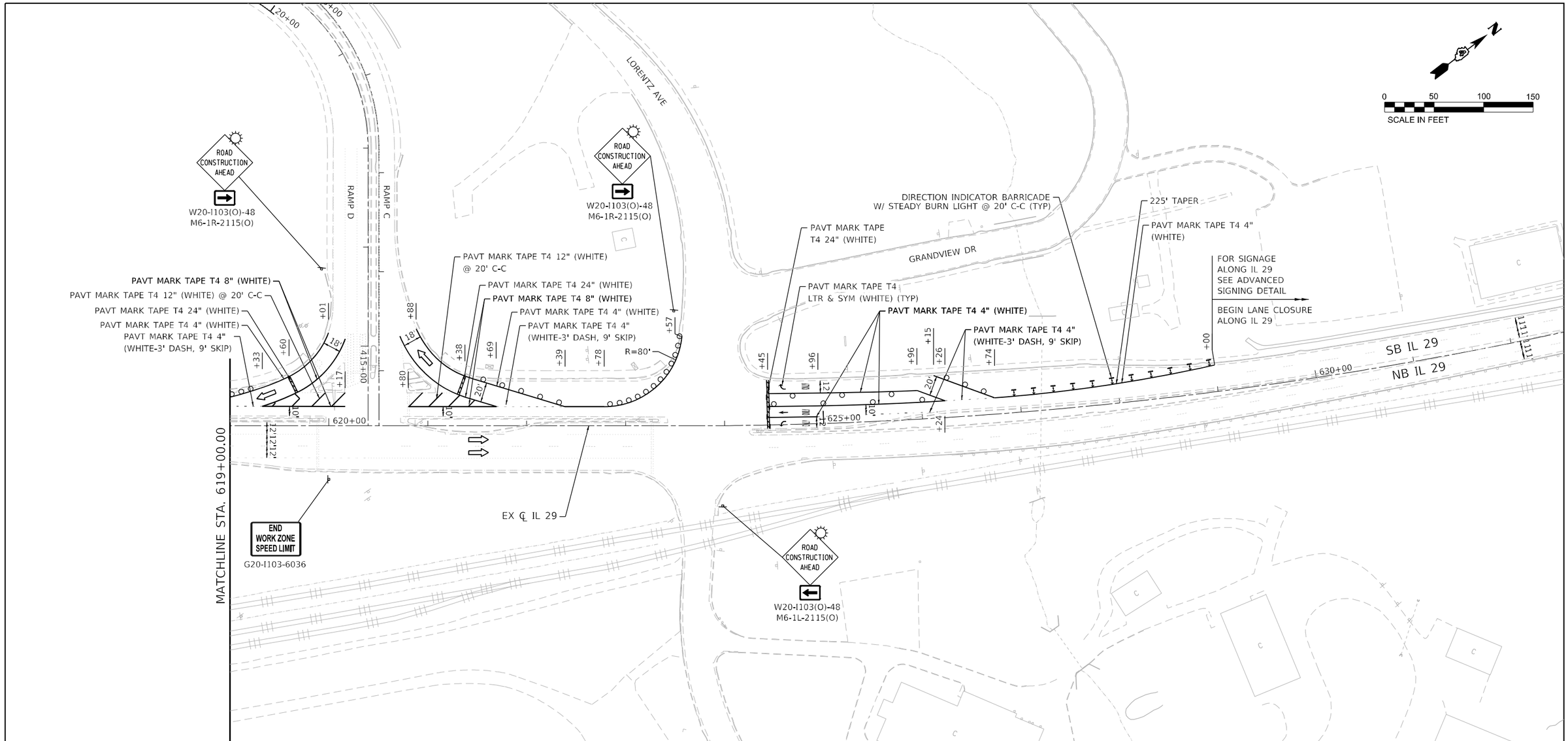

LEGEND

- WORK ZONE
- DIRECTION OF TRAFFIC
- TEMPORARY CONCRETE BARRIER
- IMPACT ATTENUATOR, TEST LEVEL 2 (TEMPORARY, NARROW)
- CHANNELIZING DEVICE
- TYPE III BARRICADE
- DIRECTION INDICATOR BARRICADE W/ STEADY BURN LIGHT @ 20' C-C

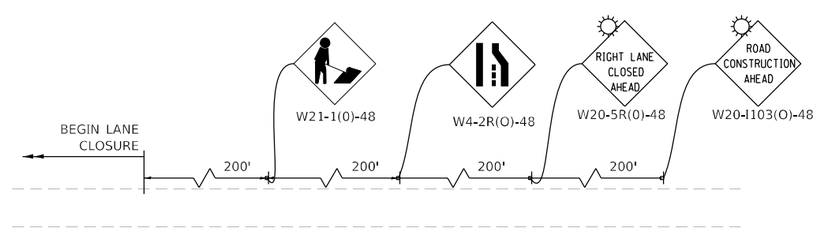

ADVANCED SIGNING DETAIL

LIN ENGINEERING,LTD. Consulting Engineers Westmont, Illinois	USER NAME = jkeinn	DESIGNED - JK	REVISED -
		DRAWN - JK	REVISED -
	PLOT SCALE = 100.0000 ' / in.	CHECKED - ST	REVISED -
	PLOT DATE = 1/14/2025	DATE - 1/2025	REVISED -

STATE OF ILLINOIS
DEPARTMENT OF TRANSPORTATION

US 150 WESTBOUND McCLUGAGE BRIDGE PROJECT
MAINTENANCE OF TRAFFIC PLANS STAGE 1A

SCALE: 1"=50' | SHEET 13 OF 20 SHEETS | STA. 619+00.00 TO STA. 632+54.63

F.A.P. RTE.	SECTION	COUNTY	TOTAL SHEETS	SHEET NO.
317	(15B-1)BP,BRR;(14HB-1)BRR	PEORIA/TAZEWELL	418	57

CONTRACT NO. 68E44

ILLINOIS | FED. AID PROJECT

NOTE:
OFFSET LABELS PROVIDED FOR PROPOSED TEMPORARY CONCRETE BARRIER ARE MEASURED TO THE CENTERLINE OF THE BARRIER WALL.

0 50 100 150
SCALE IN FEET

RAMP A
RAMP B
EB U.S. 150
WB U.S. 150
RAMP D
RAMP E
EX ℄ IL 29
SB IL 29
NB IL 29
G20-I103-6036
END WORK ZONE SPEED LIMIT
300' TAPER
290' TAPER
DIRECTION INDICATOR BARRICADE W/ STEADY BURN LIGHT @ 20' C-C (TYP)
TAPER 8:1
TEMP CONC BARRICADE TO BE PINNED, 200.0 LF
BEGIN LANE CLOSURE ALONG IL 29
FOR SIGNAGE ALONG IL 29 SEE ADVANCED SIGNING DETAIL
616+26.24 24.21' LT
616+10.99 17.41' RT
615+12.54 9.90' RT
617+32.87 22.26' LT
PAVT MARK TAPE T4 4" (YELLOW)
TEMP CONC BARRICADE TO BE PINNED, 212.5 LF
TAPER 8:1
618+36.14 16.21' LT
175' TAPER
PAVT MARK TAPE T4 4" (YELLOW)
617+13.68 19.52' RT
MATCHLINE STA. 619+00.00

200' 200' 200' 200'
BEGIN LANE CLOSURE

ROAD CONSTRUCTION AHEAD — W20-I103(O)-48
LEFT LANE CLOSED AHEAD — W20-5L(O)-48
W4-2L(O)-48
W21-1(0)-48

ADVANCED SIGNING DETAIL

LEGEND

- WORK ZONE
- DIRECTION OF TRAFFIC
- TEMPORARY CONCRETE BARRIER
- IMPACT ATTENUATOR, TEST LEVEL 2 (TEMPORARY, NARROW)
- CHANNELIZING DEVICE
- TYPE III BARRICADE
- DIRECTION INDICATOR BARRICADE W/ STEADY BURN LIGHT @ 20' C-C

LIN ENGINEERING,LTD.
Consulting Engineers
Westmont, Illinois

USER NAME = jkenn	DESIGNED - JK	REVISED -	
	DRAWN - JK	REVISED -	
PLOT SCALE = 100.0000 ' / in.	CHECKED - ST	REVISED -	
PLOT DATE = 1/14/2025	DATE - 1/2025	REVISED -	

STATE OF ILLINOIS
DEPARTMENT OF TRANSPORTATION

US 150 WESTBOUND McCLUGAGE BRIDGE PROJECT
MAINTENANCE OF TRAFFIC PLANS STAGE 1B

SCALE: 1"=50' | SHEET 14 OF 20 SHEETS | STA. 606+52.60 TO STA. 619+00.00

F.A.P. RTE.	SECTION	COUNTY	TOTAL SHEETS	SHEET NO.
317	(15B-1)BP,BRR:(14HB-1)BRR	PEORIA/TAZEWELL	418	58
		CONTRACT NO. 68E44		
	ILLINOIS	FED. AID PROJECT		

0 50 100 150
SCALE IN FEET

ROAD CONSTRUCTION AHEAD
W20-I103(O)-48
M6-1R-2115(O)

ROAD CONSTRUCTION AHEAD
W20-I103(O)-48
M6-1R-2115(O)

ROAD CONSTRUCTION AHEAD
W20-I103(O)-48
M6-1L-2115(O)

RAMP D
RAMP C
LORENTZ AVE
GRANDVIEW DR
SB IL 29
NB IL 29
MATCHLINE STA. 619+00.00
620+00
625+00
630+00
R=15'
EX ℄ IL 29

PAVT MARK TAPE T4 24" (WHITE)
PAVT MARK TAPE T4 4" (YELLOW)
PAVT MARK TAPE T4 4" (WHITE)
PAVT MARK TAPE T4 24" (WHITE)
PAVT MARK TAPE T4 4" (YELLOW)
PAVT MARK TAPE T4 4" (WHITE)
PAVT MARK TAPE T4 24" (WHITE)
PAVT MARK TAPE T4 4" (WHITE)
PAVT MARK TAPE T4 4" (WHITE-3' DASH, 9' SKIP)
225' TAPER
PAVT MARK TAPE T4 4" (YELLOW)
DIRECTION INDICATOR BARRICADE W/ STEADY BURN LIGHT @ 20' C-C (TYP)
PAVT MARK TAPE T4 LTR & SYM (WHITE) (TYP)

G20-I103-6036
END WORK ZONE SPEED LIMIT

FOR SIGNAGE ALONG IL 29 SEE ADVANCED SIGNING DETAIL
BEGIN LANE CLOSURE ALONG IL 29

LEGEND

- WORK ZONE
- DIRECTION OF TRAFFIC
- TEMPORARY CONCRETE BARRIER
- IMPACT ATTENUATOR, TEST LEVEL 2 (TEMPORARY, NARROW)
- CHANNELIZING DEVICE
- TYPE III BARRICADE
- DIRECTION INDICATOR BARRICADE W/ STEADY BURN LIGHT @ 20' C-C

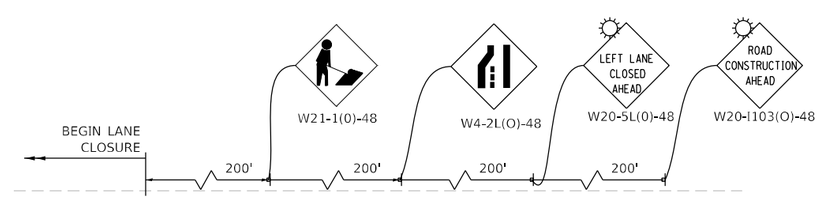

ADVANCED SIGNING DETAIL

LIN ENGINEERING,LTD. Consulting Engineers Westmont, Illinois	USER NAME = jkehn	DESIGNED - JK	REVISED -
		DRAWN - JK	REVISED -
	PLOT SCALE = 100.0000 ' / in.	CHECKED - ST	REVISED -
	PLOT DATE = 1/14/2025	DATE - 1/2025	REVISED -

STATE OF ILLINOIS
DEPARTMENT OF TRANSPORTATION

US 150 WESTBOUND McCLUGAGE BRIDGE PROJECT
MAINTENANCE OF TRAFFIC PLANS STAGE 1B

SCALE: 1"=50' | SHEET 15 OF 20 SHEETS | STA. 619+00.00 TO STA. 632+54.63

F.A.P. RTE.	SECTION	COUNTY	TOTAL SHEETS	SHEET NO.
317	(15B-1)BP,BRR;(14HB-1)BRR	PEORIA/TAZEWELL	418	59
		CONTRACT NO. 68E44		
		ILLINOIS FED. AID PROJECT		

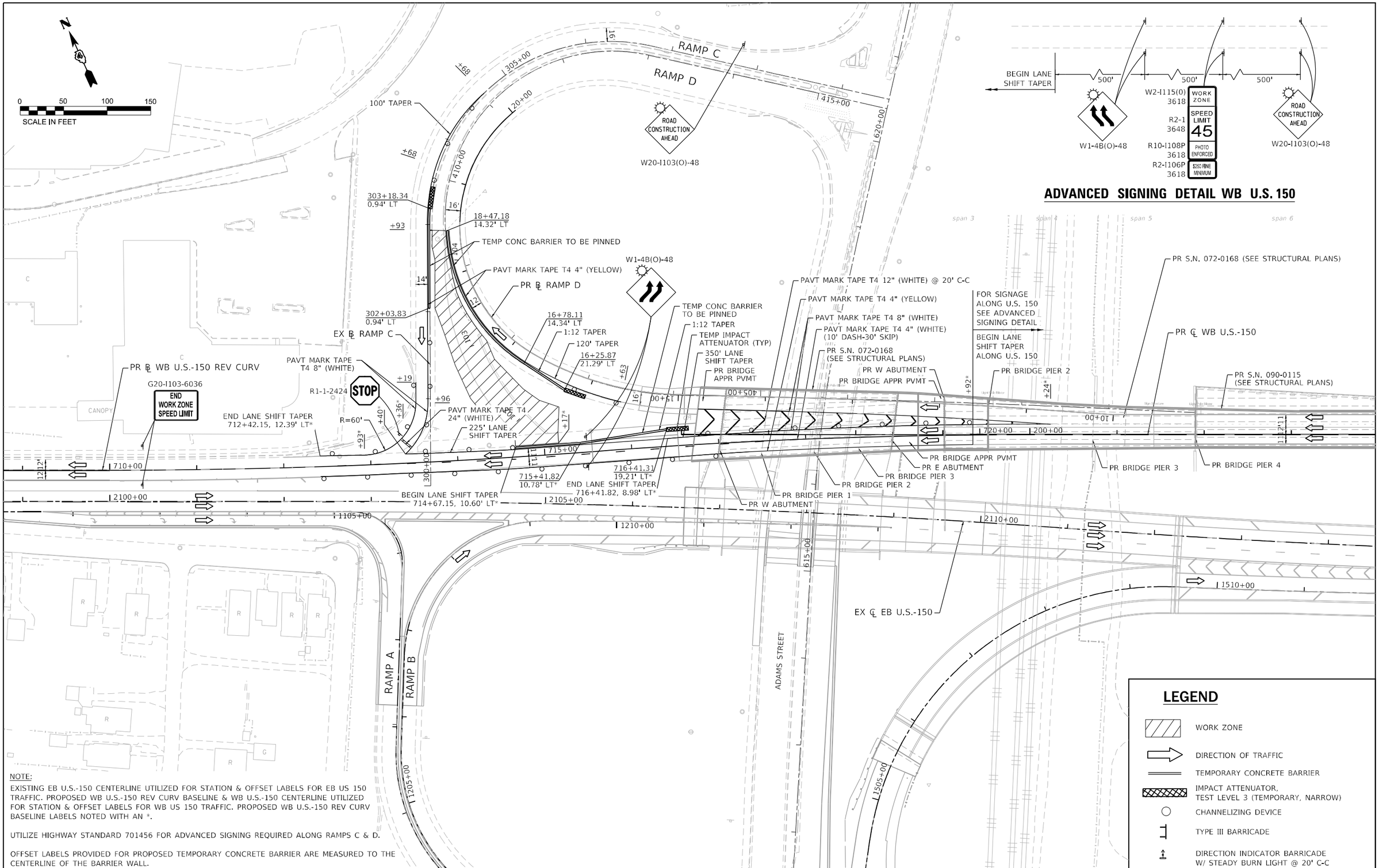

NOTE:

EXISTING EB U.S.-150 CENTERLINE UTILIZED FOR STATION & OFFSET LABELS FOR EB US 150 TRAFFIC. PROPOSED WB U.S.-150 REV CURV BASELINE & WB U.S.-150 CENTERLINE UTILIZED FOR STATION & OFFSET LABELS FOR WB US 150 TRAFFIC. PROPOSED WB U.S.-150 REV CURV BASELINE LABELS NOTED WITH AN *.

UTILIZE HIGHWAY STANDARD 701456 FOR ADVANCED SIGNING REQUIRED ALONG RAMPS C & D.

OFFSET LABELS PROVIDED FOR PROPOSED TEMPORARY CONCRETE BARRIER ARE MEASURED TO THE CENTERLINE OF THE BARRIER WALL.

LIN ENGINEERING, LTD. Consulting Engineers Westmont, Illinois	USER NAME = jkenn	DESIGNED - JK	REVISED -
		DRAWN - JK	REVISED -
	PLOT SCALE = 100.0000 ' / in.	CHECKED - ST	REVISED -
	PLOT DATE = 1/14/2025	DATE - 1/2025	REVISED -

STATE OF ILLINOIS
DEPARTMENT OF TRANSPORTATION

US 150 WESTBOUND McCLUGAGE BRIDGE PROJECT
MAINTENANCE OF TRAFFIC PLANS POST-STAGE A

SCALE: 1"=50' | SHEET 16 OF 20 SHEETS | STA. 712+42 TO STA. 719+92

F.A.P. RTE.	SECTION	COUNTY	TOTAL SHEETS	SHEET NO.
317	(15B-1)BP,BRR;(14HB-1)BRR	PEORIA/TAZEWELL	418	60
		CONTRACT NO. 68E44		
	ILLINOIS	FED. AID PROJECT		

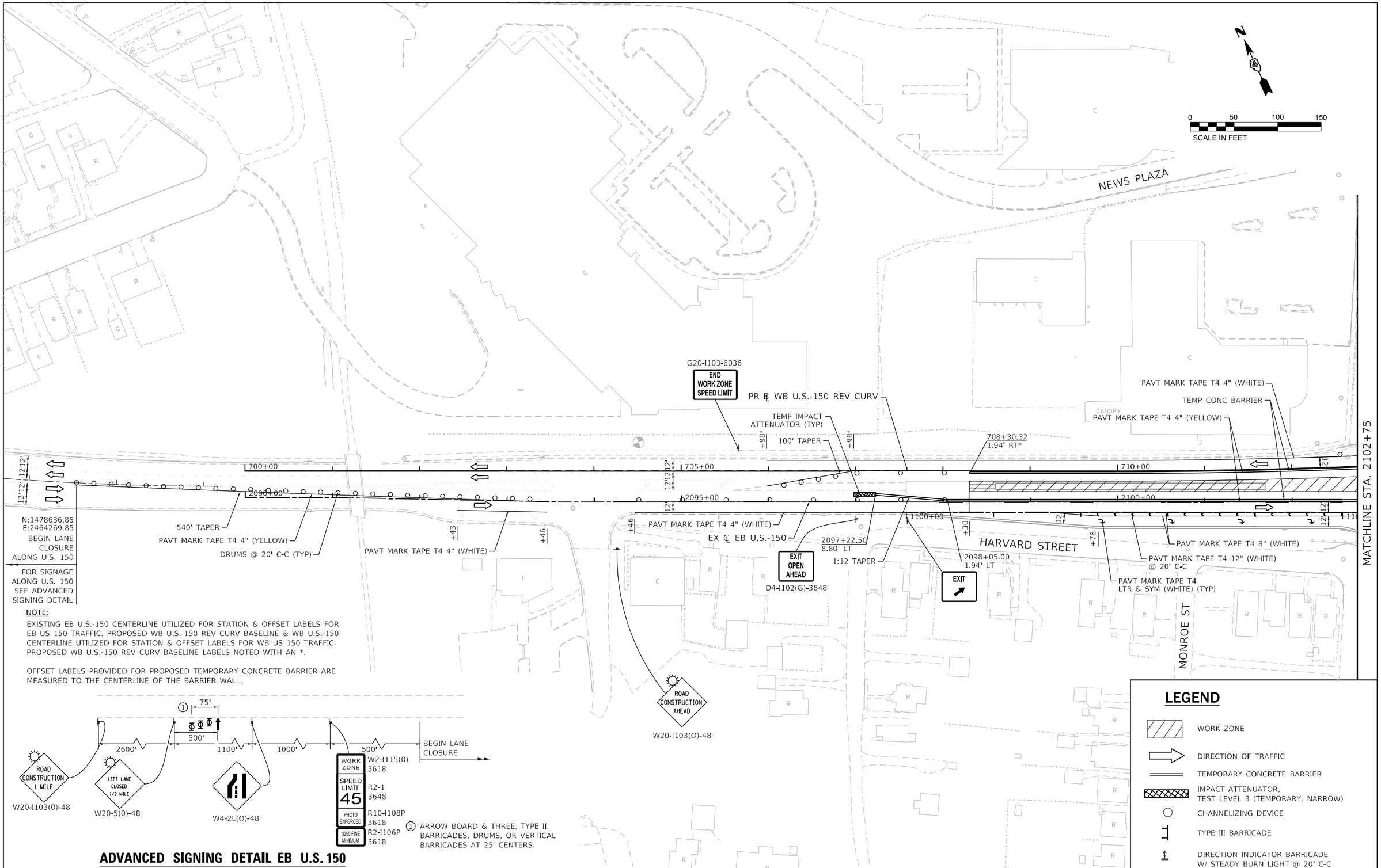

NOTE:

EXISTING EB U.S.-150 CENTERLINE UTILIZED FOR STATION & OFFSET LABELS FOR EB US 150 TRAFFIC. PROPOSED WB U.S.-150 REV CURV BASELINE & WB U.S.-150 CENTERLINE UTILIZED FOR STATION & OFFSET LABELS FOR WB US 150 TRAFFIC. PROPOSED WB U.S.-150 REV CURV BASELINE LABELS NOTED WITH AN *.

OFFSET LABELS PROVIDED FOR PROPOSED TEMPORARY CONCRETE BARRIER ARE MEASURED TO THE CENTERLINE OF THE BARRIER WALL.

1 ARROW BOARD & THREE, TYPE II BARRICADES, DRUMS, OR VERTICAL BARRICADES AT 25' CENTERS.

ADVANCED SIGNING DETAIL EB U.S. 150

LEGEND

- WORK ZONE
- DIRECTION OF TRAFFIC
- TEMPORARY CONCRETE BARRIER
- IMPACT ATTENUATOR, TEST LEVEL 3 (TEMPORARY, NARROW)
- CHANNELIZING DEVICE
- TYPE III BARRICADE
- DIRECTION INDICATOR BARRICADE W/ STEADY BURN LIGHT @ 20' C-C

LIN ENGINEERING,LTD. Consulting Engineers Westmont, Illinois	USER NAME = jkeinn	DESIGNED - JK	REVISED -
		DRAWN - JK	REVISED -
	PLOT SCALE = 100.0000 ' / in.	CHECKED - ST	REVISED -
	PLOT DATE = 1/14/2025	DATE - 1/2025	REVISED -

STATE OF ILLINOIS
DEPARTMENT OF TRANSPORTATION

US 150 WESTBOUND McCLUGAGE BRIDGE PROJECT
MAINTENANCE OF TRAFFIC PLANS POST-STAGE B

SCALE: 1"=50' | SHEET 17 OF 20 SHEETS | STA. 2090+00 TO STA. 2102+75

F.A.P. RTE.	SECTION	COUNTY	TOTAL SHEETS	SHEET NO.
317	(15B-1)BP,BRR;(14HB-1)BRR	PEORIA/TAZEWELL	418	61

CONTRACT NO. 68E44

ILLINOIS | FED. AID PROJECT

EX ℄ RAMP C
ROAD CONSTRUCTION AHEAD
W20-I103(O)-48
RAMP C
RAMP D
RAMP A
RAMP B
PAVT MARK TAPE T4 8" (WHITE)
PR ℄ RAMP D
PR ℄ WB U.S.-150 REV CURV
R1-1-2424
STOP
60'R
TEMP CONC BARRIER
PAVT MARK TAPE T4 24" (WHITE)
PAVT MARK TAPE T4 4" (YELLOW)
PAVT MARK TAPE T4 8" (WHITE)
PAVT MARK TAPE T4 12" (WHITE) @ 20' C-C
PAVT MARK TAPE T4 8" (WHITE)
PAVT MARK TAPE T4 8" (WHITE)
PAVT MARK TAPE T4 12" (WHITE) @ 20' C-C
2106+59.54
1.94' LT
100' TAPER
PR BRIDGE APPR PVMT
PR W ABUTMENT
1:12 TAPER
PR S.N. 072-0168 (SEE STRUCTURAL PLANS)
PR BRIDGE PIER 2
PAVT MARK TAPE T4 8" (WHITE)
PAVT MARK TAPE T4 12" (WHITE) @ 20' C-C
PR BRIDGE APPR PVMT
PR BRIDGE APPR PVMT
PR W ABUTMENT
TEMP IMPACT ATTENUATOR (TYP)
PR BRIDGE PIER 2
PR E ABUTMENT
719+68.25
12.86' RT*
718+68.09
13.91' RT*
PR BRIDGE PIER 3
717+14.56
1.94' RT*
PR BRIDGE PIER 1
PAVT MARK TAPE T4 4" (WHITE)
(10' DASH-30' SKIP)
PR S.N. 072-0168 (SEE STRUCTURAL PLANS)
PAVT MARK TAPE T4 4" (WHITE)
(2' DASH-6' SKIP)
PR ℄ WB U.S.-150
PAVT MARK TAPE T4 4" (WHITE)
(10' DASH-30' SKIP)
PAVT MARK TAPE T4 4" (YELLOW)
PR BRIDGE PIER 3
PR BRIDGE PIER 4
PR BRIDGE PIER 5
PR BRIDGE PIER 6
END WORK ZONE SPEED LIMIT
G20-I103-6036
EX ℄ EB U.S.-150
ADAMS STREET
MATCHLINE STA. 2102+75
MATCHLINE STA. 207+00.00
SCALE IN FEET
0 50 100 150

NOTE:

EXISTING EB U.S.-150 CENTERLINE UTILIZED FOR STATION & OFFSET LABELS FOR EB US 150 TRAFFIC. PROPOSED WB U.S.-150 REV CURV BASELINE & WB U.S.-150 CENTERLINE UTILIZED FOR STATION & OFFSET LABELS FOR WB US 150 TRAFFIC. PROPOSED WB U.S.-150 REV CURV BASELINE LABELS NOTED WITH AN *.

OFFSET LABELS PROVIDED FOR PROPOSED TEMPORARY CONCRETE BARRIER ARE MEASURED TO THE CENTERLINE OF THE BARRIER WALL.

LEGEND

- WORK ZONE
- DIRECTION OF TRAFFIC
- TEMPORARY CONCRETE BARRIER
- IMPACT ATTENUATOR, TEST LEVEL 3 (TEMPORARY, NARROW)
- CHANNELIZING DEVICE
- TYPE III BARRICADE
- DIRECTION INDICATOR BARRICADE W/ STEADY BURN LIGHT @ 20' C-C

LIN ENGINEERING,LTD.
Consulting Engineers
Westmont, Illinois

USER NAME = jkehn	DESIGNED - JK	REVISED -	
	DRAWN - JK	REVISED -	
PLOT SCALE = 100.0000 ' / in.	CHECKED - ST	REVISED -	
PLOT DATE = 1/14/2025	DATE - 1/2025	REVISED -	

STATE OF ILLINOIS
DEPARTMENT OF TRANSPORTATION

US 150 WESTBOUND McCLUGAGE BRIDGE PROJECT
MAINTENANCE OF TRAFFIC PLANS POST-STAGE B

SCALE: 1"=50' | SHEET 18 OF 20 SHEETS | STA. 2102+75 TO STA. 207+00

F.A.P. RTE.	SECTION	COUNTY	TOTAL SHEETS	SHEET NO.
317	(15B-1)BP,BRR:(14HB-1)BRR	PEORIA/TAZEWELL	418	62

CONTRACT NO. 68E44

ILLINOIS | FED. AID PROJECT

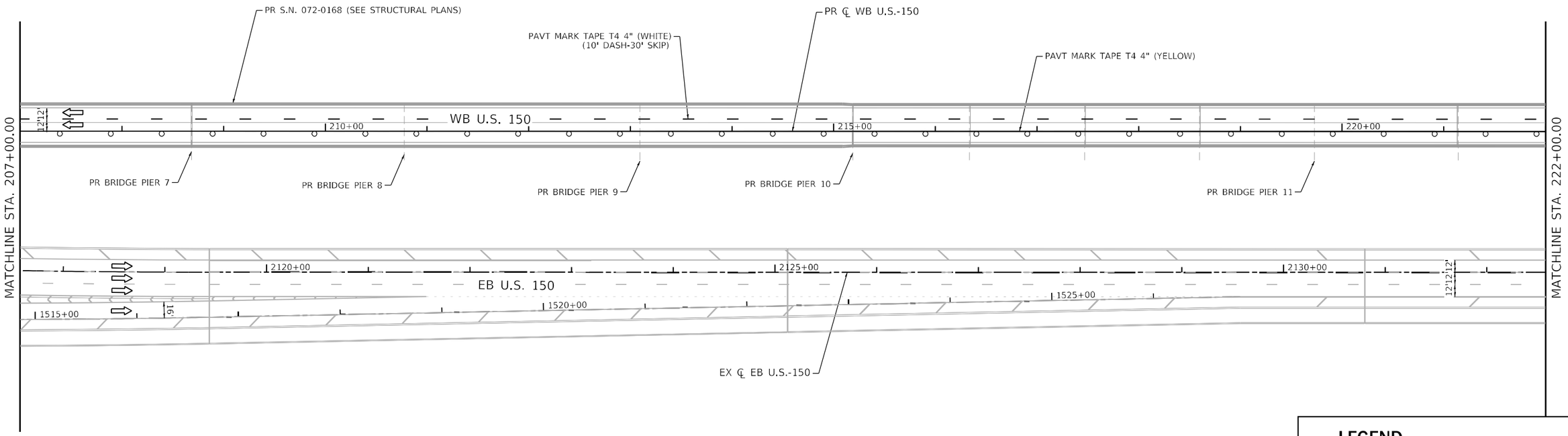

NOTE:

EXISTING EB U.S.-150 CENTERLINE UTILIZED FOR STATION & OFFSET LABELS FOR EB US 150 TRAFFIC. PROPOSED WB U.S.-150 REV CURV BASELINE & WB U.S.-150 CENTERLINE UTILIZED FOR STATION & OFFSET LABELS FOR WB US 150 TRAFFIC. PROPOSED WB U.S.-150 REV CURV BASELINE LABELS NOTED WITH AN *.

LEGEND

- WORK ZONE
- DIRECTION OF TRAFFIC
- TEMPORARY CONCRETE BARRIER
- IMPACT ATTENUATOR, TEST LEVEL 3 (TEMPORARY, NARROW)
- CHANNELIZING DEVICE
- TYPE III BARRICADE
- DIRECTION INDICATOR BARRICADE W/ STEADY BURN LIGHT @ 20' C-C

LIN ENGINEERING,LTD. Consulting Engineers Westmont, Illinois	USER NAME = jkenn	DESIGNED - JK	REVISED -
		DRAWN - JK	REVISED -
	PLOT SCALE = 100.0000 ' / in.	CHECKED - ST	REVISED -
	PLOT DATE = 1/14/2025	DATE - 1/2025	REVISED -

STATE OF ILLINOIS
DEPARTMENT OF TRANSPORTATION

US 150 WESTBOUND McCLUGAGE BRIDGE PROJECT
MAINTENANCE OF TRAFFIC PLANS POST-STAGE B

SCALE: 1"=50' | SHEET 19 OF 20 SHEETS | STA. 207+00 TO STA. 222+00

F.A.P. RTE.	SECTION	COUNTY	TOTAL SHEETS	SHEET NO.
317	(15B-1)BP,BRR;(14HB-1)BRR	PEORIA/TAZEWELL	418	63
		CONTRACT NO. 68E44		
		ILLINOIS FED. AID PROJECT		

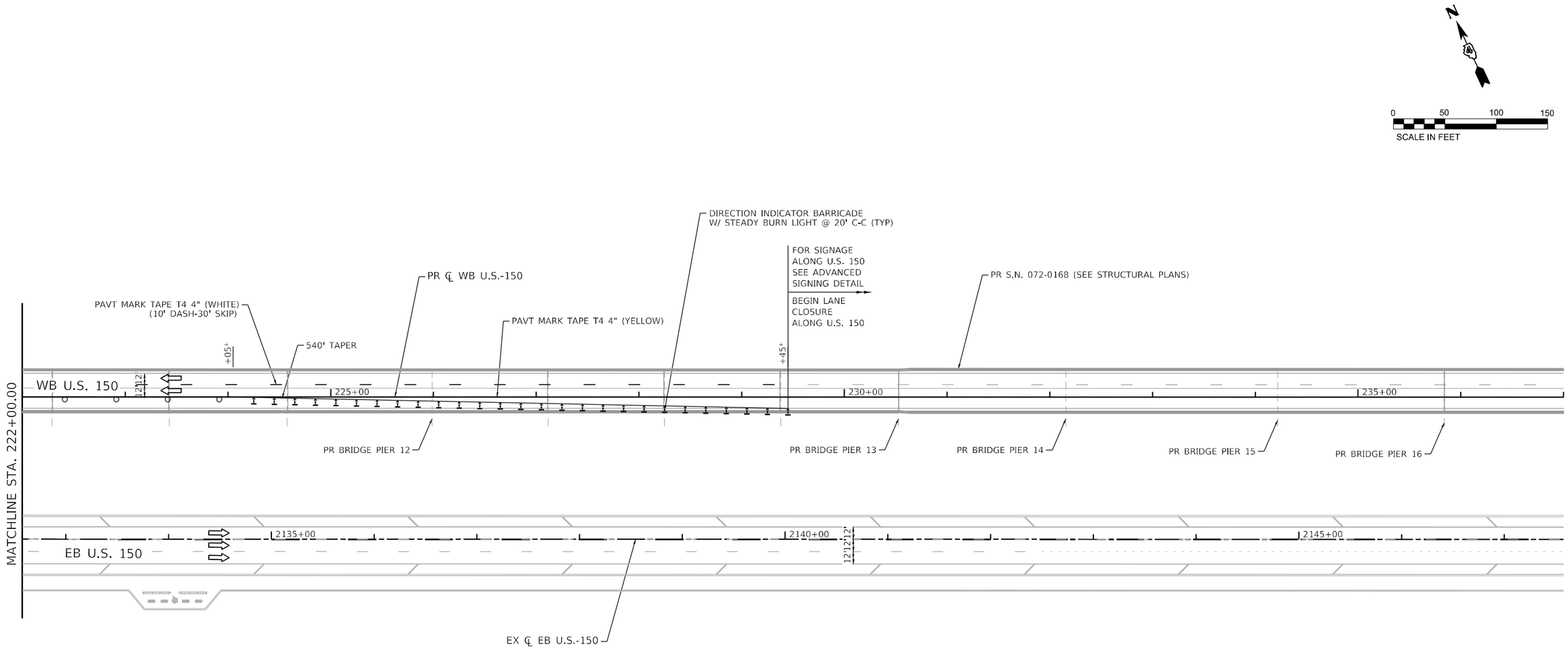

LEGEND

- WORK ZONE
- DIRECTION OF TRAFFIC
- TEMPORARY CONCRETE BARRIER
- IMPACT ATTENUATOR, TEST LEVEL 3 (TEMPORARY, NARROW)
- CHANNELIZING DEVICE
- TYPE III BARRICADE
- DIRECTION INDICATOR BARRICADE W/ STEADY BURN LIGHT @ 20' C-C

NOTE:

EXISTING EB U.S.-150 CENTERLINE UTILIZED FOR STATION & OFFSET LABELS FOR EB US 150 TRAFFIC. PROPOSED WB U.S.-150 REV CURV BASELINE & WB U.S.-150 CENTERLINE UTILIZED FOR STATION & OFFSET LABELS FOR WB US 150 TRAFFIC. PROPOSED WB U.S.-150 REV CURV BASELINE LABELS NOTED WITH AN *.

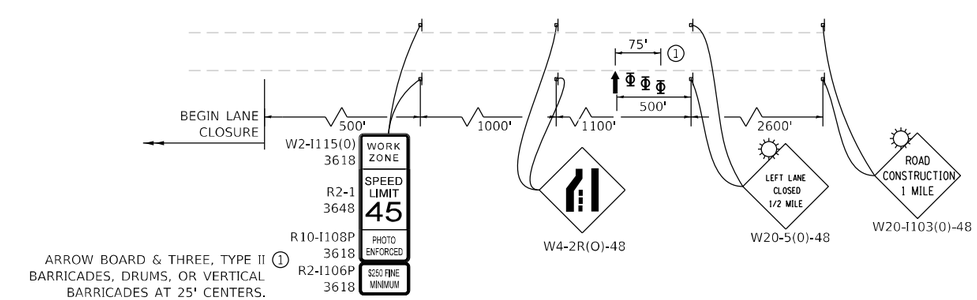

ADVANCED SIGNING DETAIL WB U.S. 150

LIN ENGINEERING,LTD. Consulting Engineers Westmont, Illinois	USER NAME = jkehn	DESIGNED - JK	REVISED -
		DRAWN - JK	REVISED -
	PLOT SCALE = 100.0000 ' / in.	CHECKED - ST	REVISED -
	PLOT DATE = 1/14/2025	DATE - 1/2025	REVISED -

STATE OF ILLINOIS
DEPARTMENT OF TRANSPORTATION

US 150 WESTBOUND McCLUGAGE BRIDGE PROJECT
MAINTENANCE OF TRAFFIC PLANS POST-STAGE B

SCALE: 1"=50' | SHEET 20 OF 20 SHEETS | STA. 222+00 TO STA. 237+00

F.A.P. RTE.	SECTION	COUNTY	TOTAL SHEETS	SHEET NO.
317	(15B-1)BP,BRR;(14HB-1)BRR	PEORIA/TAZEWELL	418	64
		CONTRACT NO. 68E44		
		ILLINOIS FED. AID PROJECT		

PROP. CURVE PRTEMPRP1
PI STA. = 102+54.27
Δ = 88° 43' 20" (RT)
D = 22° 02' 13"
R = 260.00'
T = 254.27'
L = 402.61'
E = 103.66'
e = 6.0%
T.R. = NONE
S.E. RUN = ____
P.C. STA. = 100+00.00
P.T. STA. = 104+02.61

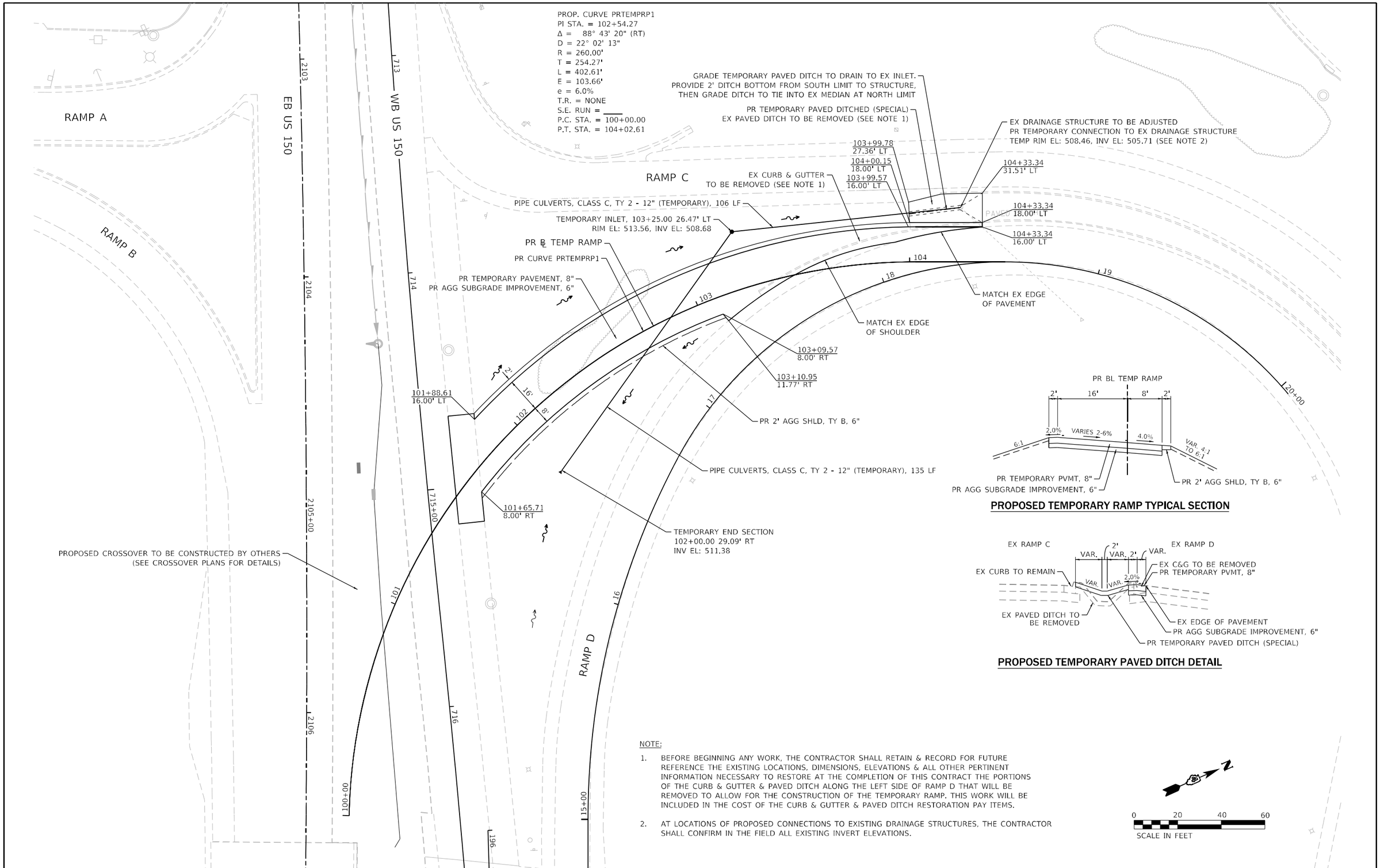

NOTE:

1. BEFORE BEGINNING ANY WORK, THE CONTRACTOR SHALL RETAIN & RECORD FOR FUTURE REFERENCE THE EXISTING LOCATIONS, DIMENSIONS, ELEVATIONS & ALL OTHER PERTINENT INFORMATION NECESSARY TO RESTORE AT THE COMPLETION OF THIS CONTRACT THE PORTIONS OF THE CURB & GUTTER & PAVED DITCH ALONG THE LEFT SIDE OF RAMP D THAT WILL BE REMOVED TO ALLOW FOR THE CONSTRUCTION OF THE TEMPORARY RAMP. THIS WORK WILL BE INCLUDED IN THE COST OF THE CURB & GUTTER & PAVED DITCH RESTORATION PAY ITEMS.

2. AT LOCATIONS OF PROPOSED CONNECTIONS TO EXISTING DRAINAGE STRUCTURES, THE CONTRACTOR SHALL CONFIRM IN THE FIELD ALL EXISTING INVERT ELEVATIONS.

LIN ENGINEERING,LTD.
Consulting Engineers
Westmont, Illinois

USER NAME = rober	DESIGNED - JK	REVISED -
	DRAWN - JK	REVISED -
PLOT SCALE = 40.0000 ' / in.	CHECKED - ST	REVISED -
PLOT DATE = 1/29/2025	DATE - 1/2025	REVISED -

STATE OF ILLINOIS
DEPARTMENT OF TRANSPORTATION

US 150 WESTBOUND McCLUGAGE BRIDGE PROJECT
TEMPORARY RAMP PLAN

SCALE: 1"=20' | SHEET 1 OF 1 SHEETS | STA. 101+47.10 TO STA. 104+33.34

F.A.P. RTE.	SECTION	COUNTY	TOTAL SHEETS	SHEET NO.
317	(15B-1)BP,BRR;(14HB-1)BRR	PEORIA/TAZEWELL	418	65
		CONTRACT NO. 68E44		
	ILLINOIS	FED. AID PROJECT	NHPP-YRP3(905)	

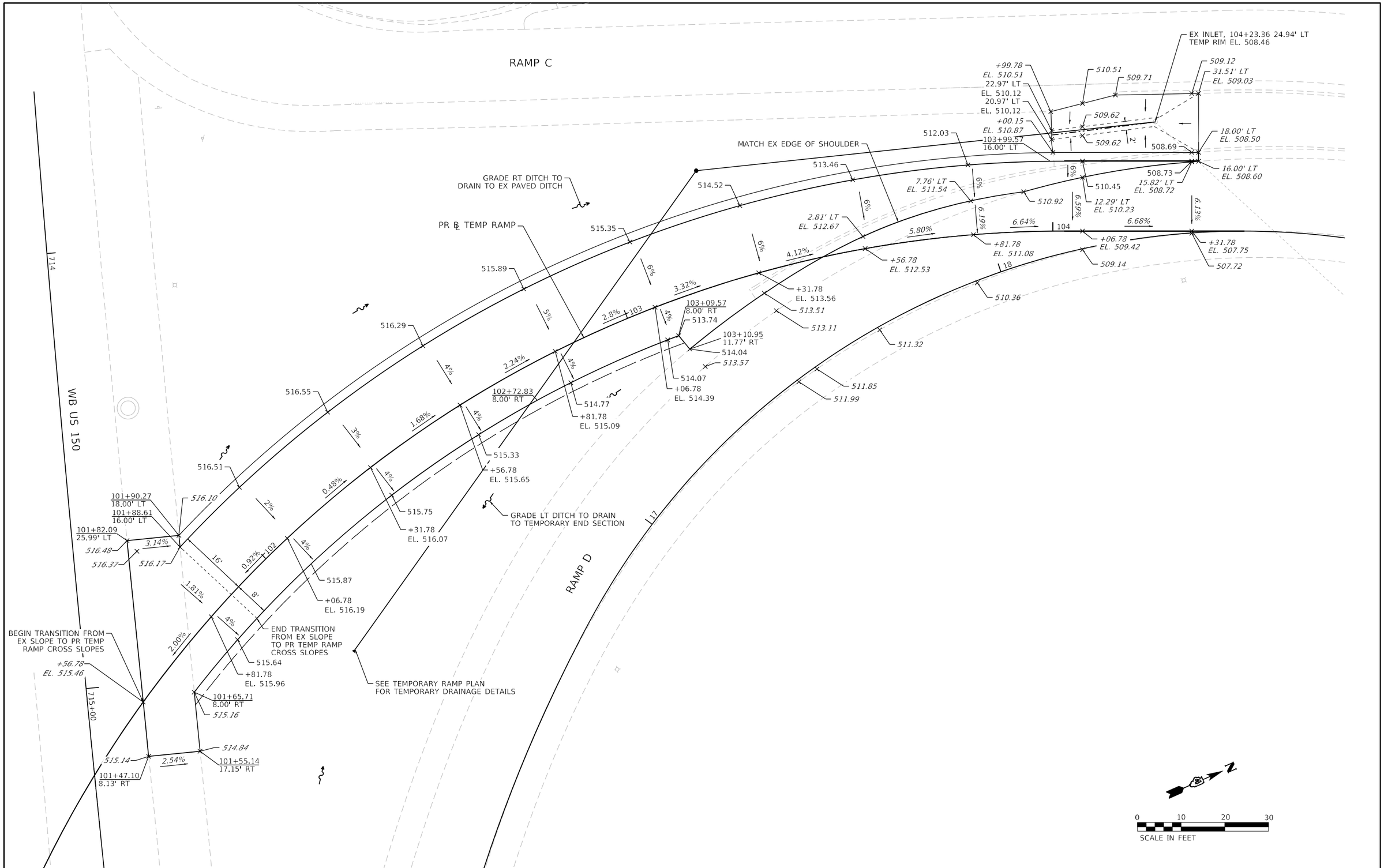

LIN ENGINEERING,LTD. Consulting Engineers Westmont, Illinois	USER NAME = rober	DESIGNED - JK	REVISED -	STATE OF ILLINOIS DEPARTMENT OF TRANSPORTATION	US 150 WESTBOUND McCLUGAGE BRIDGE PROJECT TEMPORARY RAMP DETAIL
		DRAWN - JK	REVISED -		
	PLOT SCALE = 20.0000 ' / in.	CHECKED - ST	REVISED -		
	PLOT DATE = 1/29/2025	DATE - 1/2025	REVISED -		SCALE: 1"=10' SHEET 1 OF 1 SHEETS STA. TO STA.

F.A.P. RTE.	SECTION	COUNTY	TOTAL SHEETS	SHEET NO.
317	(15B-1)BP,BRR;(14HB-1)BRR	PEORIA/TAZEWELL	418	66
		CONTRACT NO. 68E44		
	ILLINOIS	FED. AID PROJECT	NHPP-YRP3(905)	

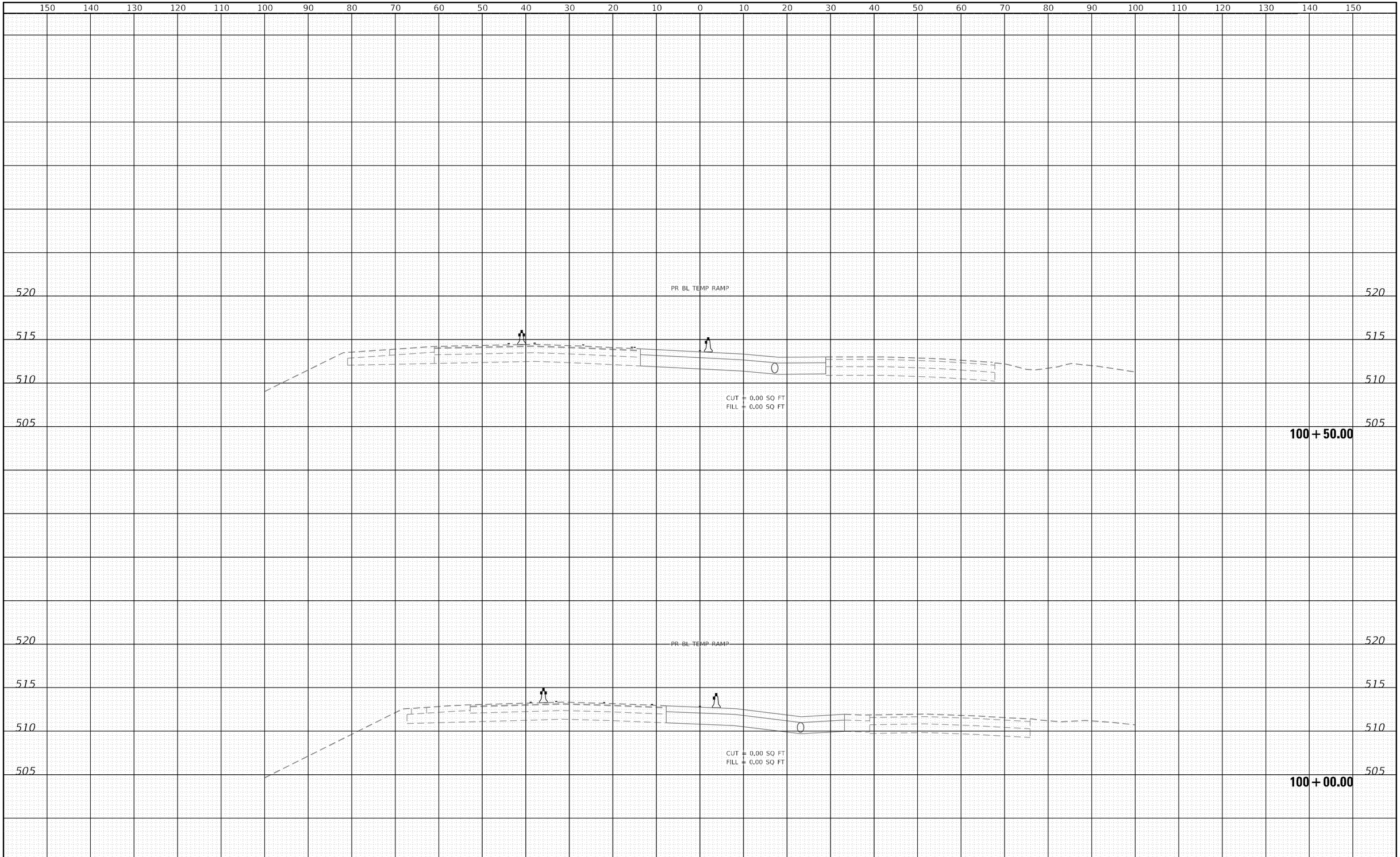

LIN ENGINEERING,LTD. Consulting Engineers Westmont, Illinois	USER NAME = rober	DESIGNED - RC	REVISED -
		DRAWN - RC	REVISED -
	PLOT SCALE = 20.0000 ' / in.	CHECKED - ST	REVISED -
	PLOT DATE = 1/29/2025	DATE - 1/2025	REVISED -

STATE OF ILLINOIS
DEPARTMENT OF TRANSPORTATION

US 150 WESTBOUND McCLUGAGE BRIDGE PROJECT
MAINTENANCE OF TRAFFIC CROSS SECTIONS - TEMPORARY RAMP

SCALE: 1"=10'H, 5'V | SHEET 1 OF 5 SHEETS | STA. 100+00.00 TO STA. 100+50.00

F.A.P. RTE.	SECTION	COUNTY	TOTAL SHEETS	SHEET NO.
317	(15B-1)BP,BRR;(14HB-1)BRR	PEORIA/TAZEWELL	418	67
		CONTRACT NO. 68E44		
	ILLINOIS	FED. AID PROJECT	NHPP-YRP3(905)	

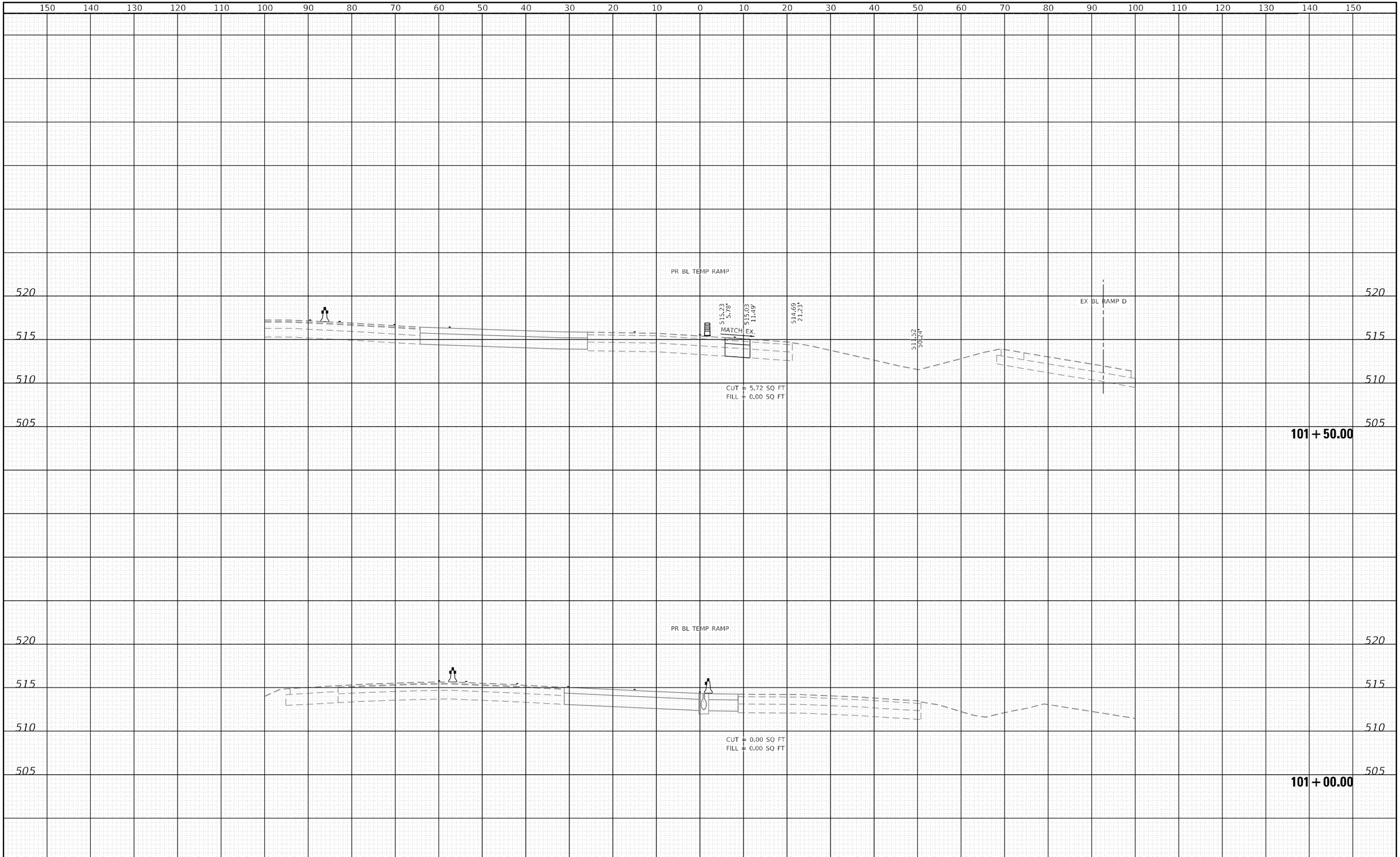

LIN ENGINEERING,LTD. Consulting Engineers Westmont, Illinois	USER NAME = rober	DESIGNED - RC	REVISED -
		DRAWN - RC	REVISED -
	PLOT SCALE = 20.0000 ' / in.	CHECKED - ST	REVISED -
	PLOT DATE = 1/29/2025	DATE - 1/2025	REVISED -

STATE OF ILLINOIS
DEPARTMENT OF TRANSPORTATION

US 150 WESTBOUND McCLUGAGE BRIDGE PROJECT
MAINTENANCE OF TRAFFIC CROSS SECTIONS - TEMPORARY RAMP

SCALE: 1"=10'H, 5'V | SHEET 2 OF 5 SHEETS | STA. 101+00.00 TO STA. 101+50.00

F.A.P. RTE.	SECTION	COUNTY	TOTAL SHEETS	SHEET NO.
317	(15B-1)BP,BRR;(14HB-1)BRR	PEORIA/TAZEWELL	418	68

CONTRACT NO. 68E44

ILLINOIS | FED. AID PROJECT NHPP-YRP3(905)

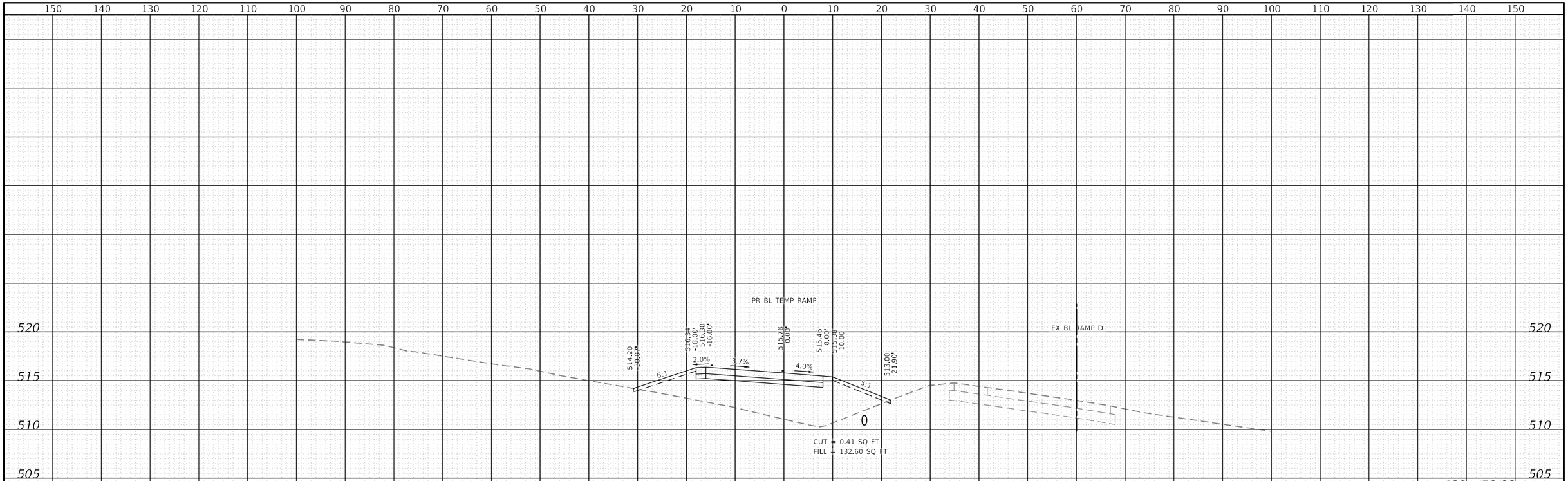

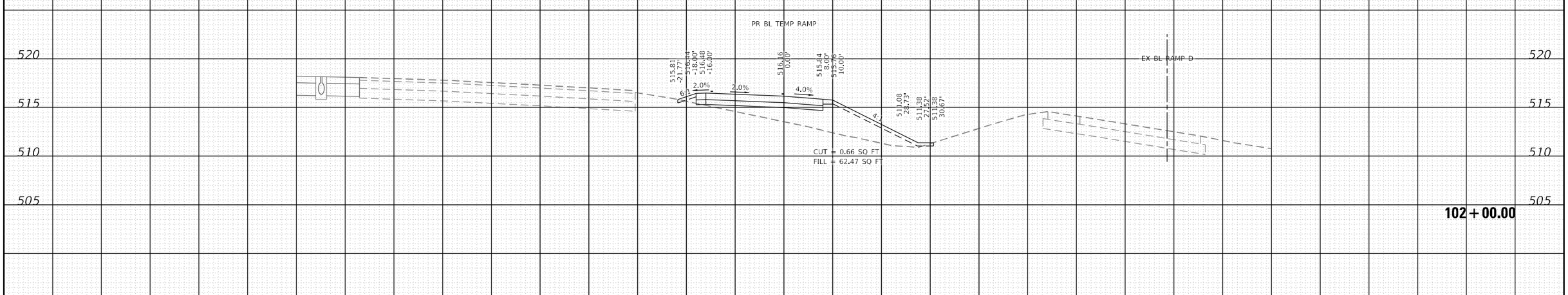

LIN ENGINEERING,LTD.
Consulting Engineers
Westmont, Illinois

USER NAME = rober	DESIGNED - RC	REVISED -
	DRAWN - RC	REVISED -
PLOT SCALE = 20.0000 ' / in.	CHECKED - ST	REVISED -
PLOT DATE = 1/29/2025	DATE - 1/2025	REVISED -

STATE OF ILLINOIS
DEPARTMENT OF TRANSPORTATION

US 150 WESTBOUND McCLUGAGE BRIDGE PROJECT
MAINTENANCE OF TRAFFIC CROSS SECTIONS - TEMPORARY RAMP

SCALE: 1"=10'H, 5'V | SHEET 3 OF 5 SHEETS | STA. 102+00.00 TO STA. 102+50.00

F.A.P. RTE.	SECTION	COUNTY	TOTAL SHEETS	SHEET NO.
317	(15B-1)BP,BRR;(14HB-1)BRR	PEORIA/TAZEWELL	418	69

CONTRACT NO. 68E44

ILLINOIS | FED. AID PROJECT NHPP-YRP3(905)

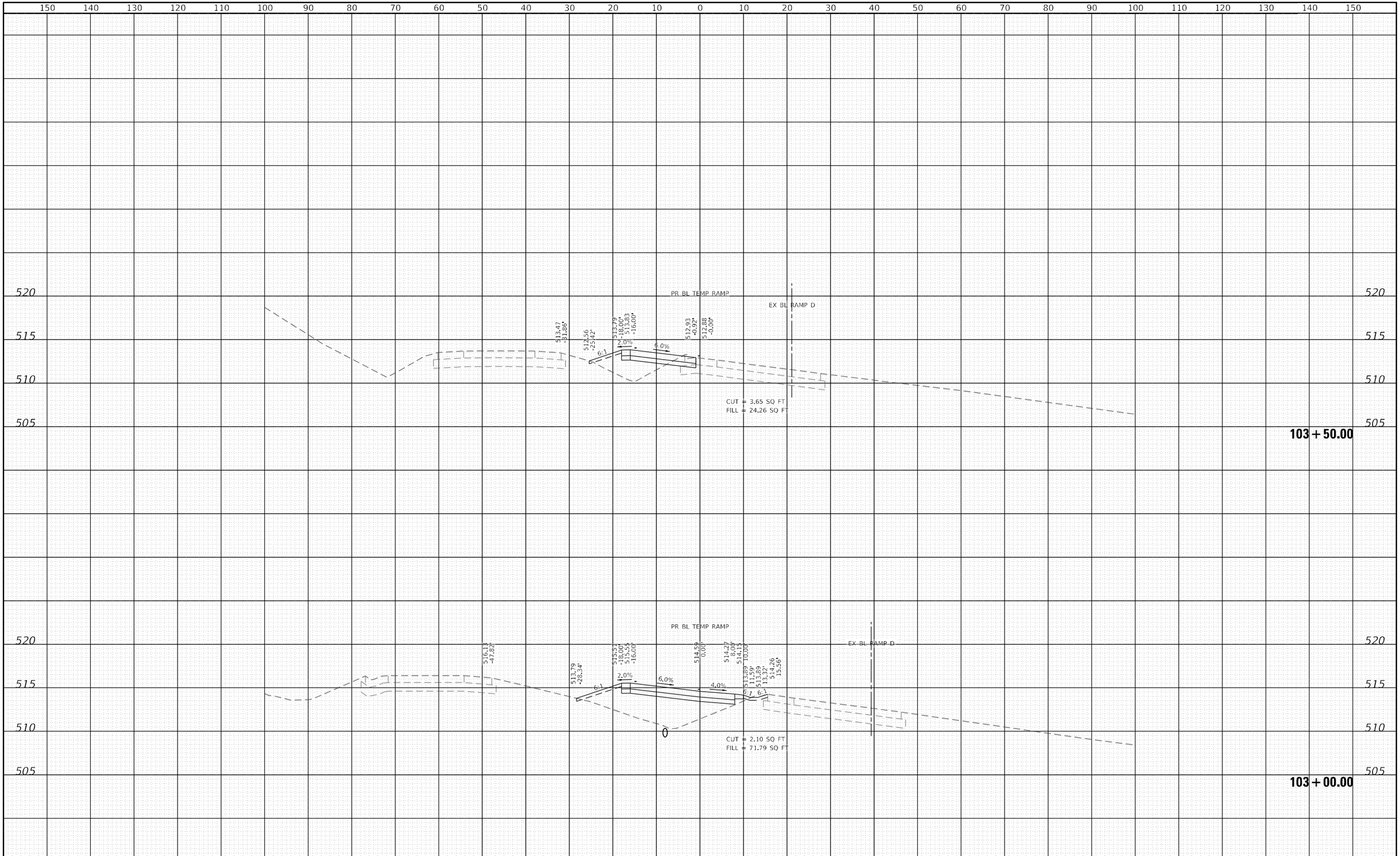

LIN ENGINEERING,LTD. Consulting Engineers Westmont, Illinois	USER NAME = rober	DESIGNED - RC	REVISED -	STATE OF ILLINOIS DEPARTMENT OF TRANSPORTATION	US 150 WESTBOUND McCLUGAGE BRIDGE PROJECT MAINTENANCE OF TRAFFIC CROSS SECTIONS - TEMPORARY RAMP
		DRAWN - RC	REVISED -		
	PLOT SCALE = 20.0000 ' / in.	CHECKED - ST	REVISED -		
	PLOT DATE = 1/29/2025	DATE - 1/2025	REVISED -		SCALE: 1"=10'H, 5'V | SHEET 4 OF 5 SHEETS | STA. 103+00.00 TO STA. 103+50.00

F.A.P. RTE.	SECTION	COUNTY	TOTAL SHEETS	SHEET NO.
317	(15B-1)BP,BRR;(14HB-1)BRR	PEORIA/TAZEWELL	418	70
		CONTRACT NO. 68E44		
	ILLINOIS	FED. AID PROJECT NHPP-YRP3(905)		

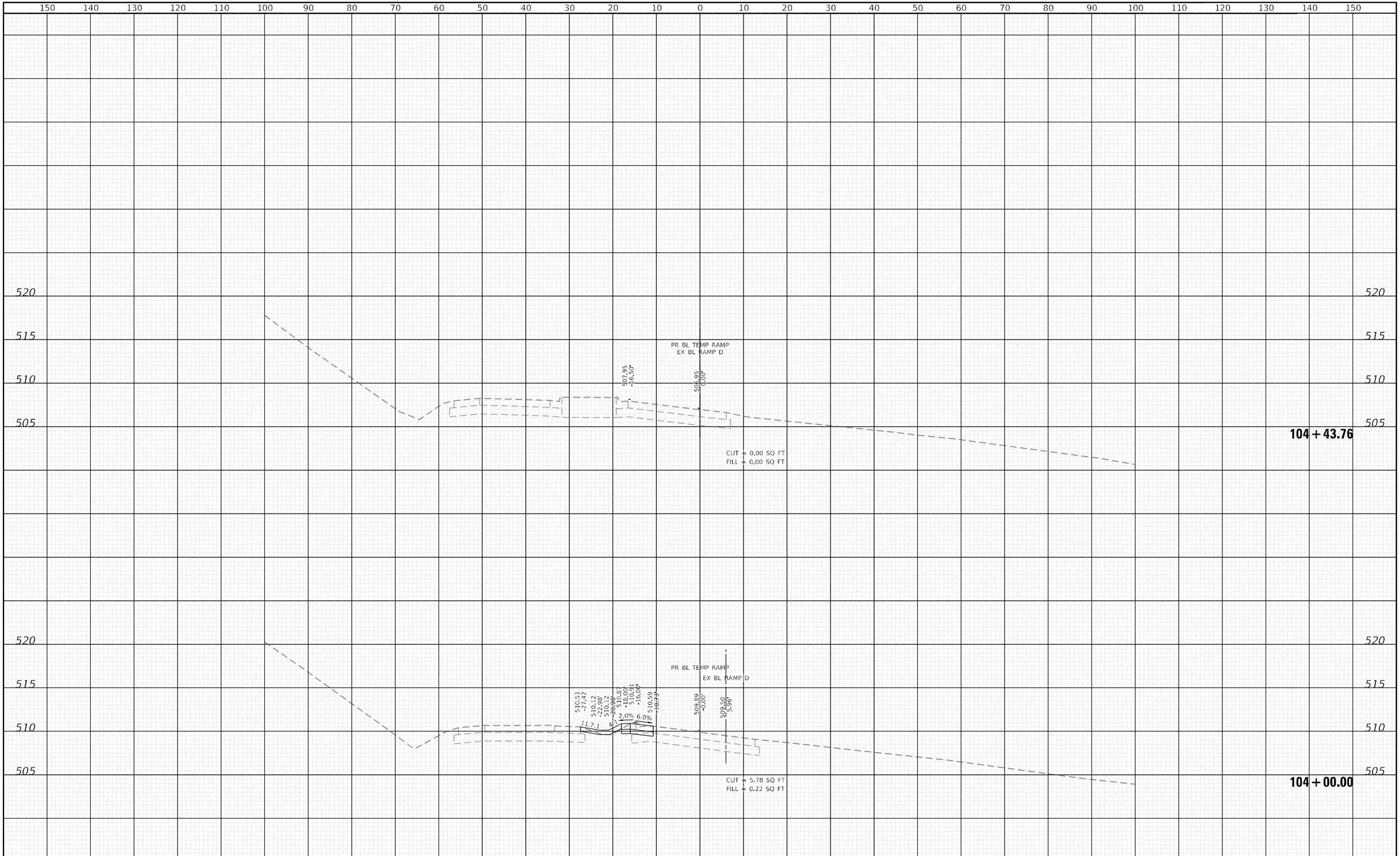

LIN ENGINEERING,LTD. Consulting Engineers Westmont, Illinois	USER NAME = rober	DESIGNED - RC	REVISED -	STATE OF ILLINOIS DEPARTMENT OF TRANSPORTATION	US 150 WESTBOUND McCLUGAGE BRIDGE PROJECT MAINTENANCE OF TRAFFIC CROSS SECTIONS - TEMPORARY RAMP
		DRAWN - RC	REVISED -		
	PLOT SCALE = 20.0000 ' / in.	CHECKED - ST	REVISED -		
	PLOT DATE = 1/29/2025	DATE - 1/2025	REVISED -		SCALE: 1"=10'H, 5'V SHEET 5 OF 5 SHEETS STA. 104+00.00 TO STA. 104+43.76

F.A.P. RTE.	SECTION	COUNTY	TOTAL SHEETS	SHEET NO.
317	(15B-1)BP,BRR;(14HB-1)BRR	PEORIA/TAZEWELL	418	71
		CONTRACT NO. 68E44		
	ILLINOIS	FED. AID PROJECT NHPP-YRP3(905)		

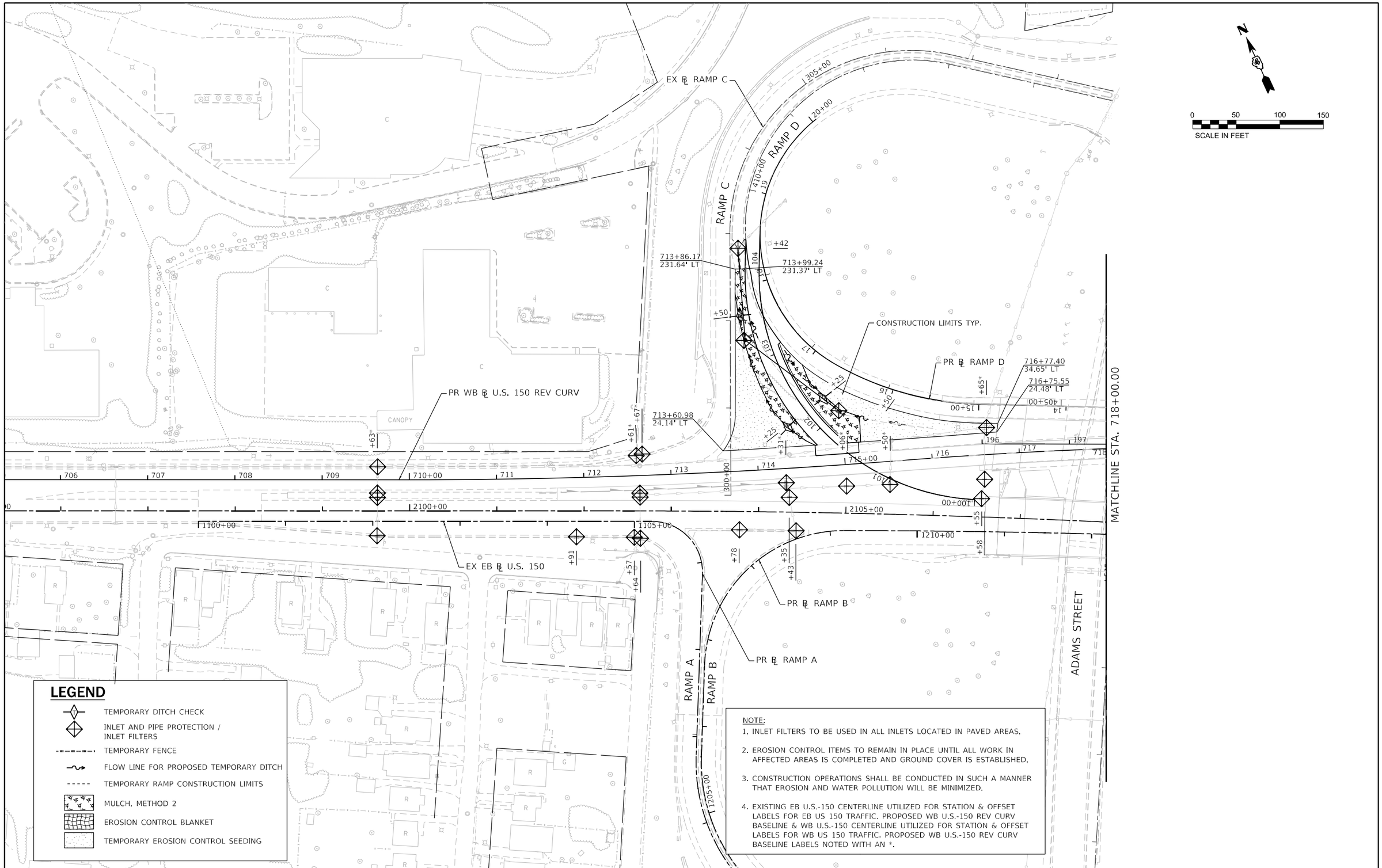

LEGEND

- TEMPORARY DITCH CHECK
- INLET AND PIPE PROTECTION / INLET FILTERS
- TEMPORARY FENCE
- FLOW LINE FOR PROPOSED TEMPORARY DITCH
- TEMPORARY RAMP CONSTRUCTION LIMITS
- MULCH, METHOD 2
- EROSION CONTROL BLANKET
- TEMPORARY EROSION CONTROL SEEDING

NOTE:

1. INLET FILTERS TO BE USED IN ALL INLETS LOCATED IN PAVED AREAS.
2. EROSION CONTROL ITEMS TO REMAIN IN PLACE UNTIL ALL WORK IN AFFECTED AREAS IS COMPLETED AND GROUND COVER IS ESTABLISHED.
3. CONSTRUCTION OPERATIONS SHALL BE CONDUCTED IN SUCH A MANNER THAT EROSION AND WATER POLLUTION WILL BE MINIMIZED.
4. EXISTING EB U.S.-150 CENTERLINE UTILIZED FOR STATION & OFFSET LABELS FOR EB US 150 TRAFFIC. PROPOSED WB U.S.-150 REV CURV BASELINE & WB U.S.-150 CENTERLINE UTILIZED FOR STATION & OFFSET LABELS FOR WB US 150 TRAFFIC. PROPOSED WB U.S.-150 REV CURV BASELINE LABELS NOTED WITH AN *.

LIN ENGINEERING,LTD. Consulting Engineers Westmont, Illinois	USER NAME = rober	DESIGNED - NH	REVISED -
		DRAWN - NH	REVISED -
	PLOT SCALE = 100.0000 ' / in.	CHECKED - ST	REVISED -
	PLOT DATE = 2/12/2025	DATE - 1/2025	REVISED -

STATE OF ILLINOIS
DEPARTMENT OF TRANSPORTATION

US 150 WESTBOUND McCLUGAGE BRIDGE PROJECT
TEMPORARY EROSION CONTROL PLAN

SCALE: 1"=50' | SHEET 1 OF 4 SHEETS | STA. TO STA.

F.A.P. RTE.	SECTION	COUNTY	TOTAL SHEETS	SHEET NO.
317	(15B-1)BP,BRR;(14HB-1)BRR	PEORIA/TAZEWELL	418	72
		CONTRACT NO. 68E44		
		ILLINOIS	FED. AID PROJECT	

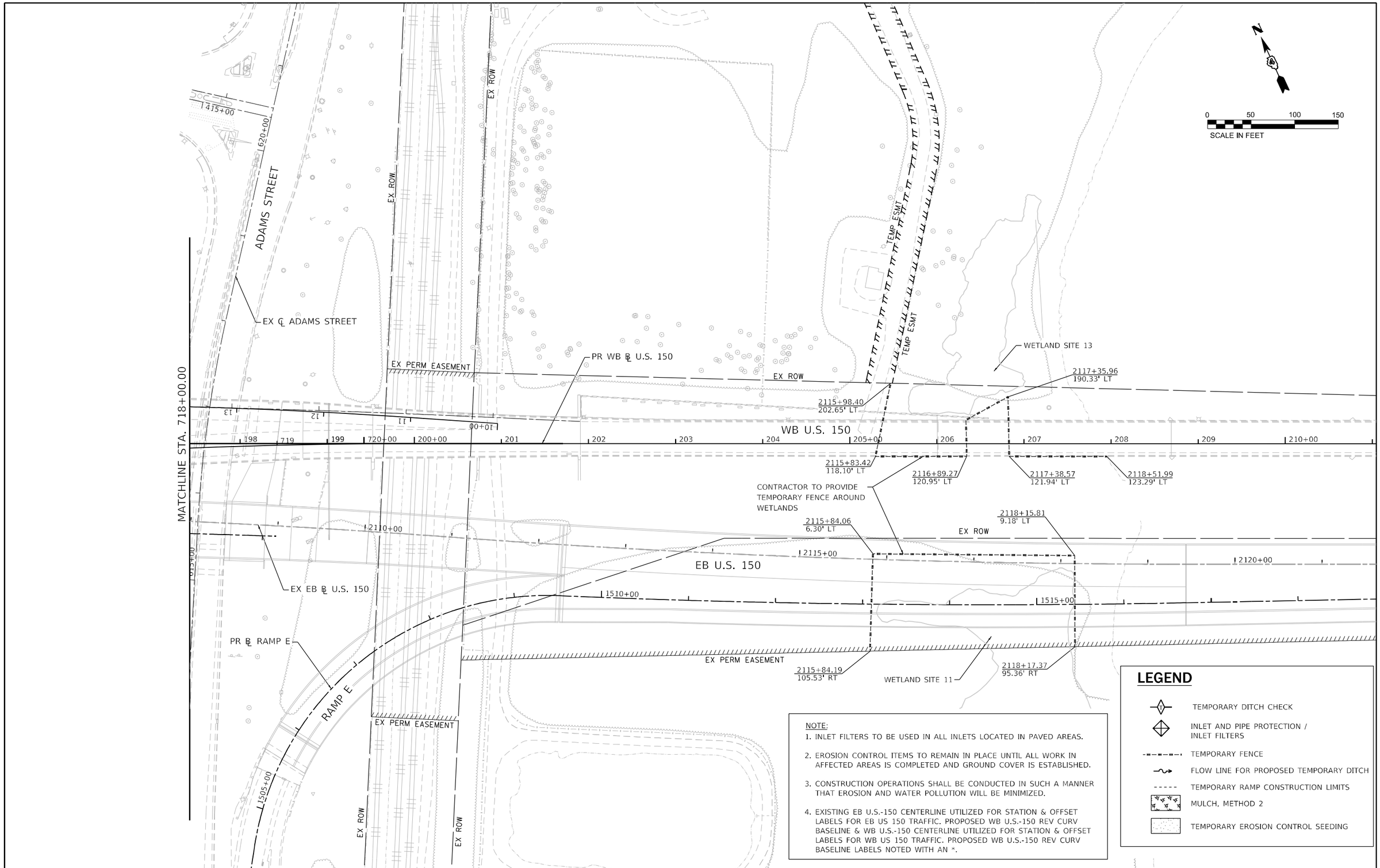

NOTE:

1. INLET FILTERS TO BE USED IN ALL INLETS LOCATED IN PAVED AREAS.
2. EROSION CONTROL ITEMS TO REMAIN IN PLACE UNTIL ALL WORK IN AFFECTED AREAS IS COMPLETED AND GROUND COVER IS ESTABLISHED.
3. CONSTRUCTION OPERATIONS SHALL BE CONDUCTED IN SUCH A MANNER THAT EROSION AND WATER POLLUTION WILL BE MINIMIZED.
4. EXISTING EB U.S.-150 CENTERLINE UTILIZED FOR STATION & OFFSET LABELS FOR EB US 150 TRAFFIC. PROPOSED WB U.S.-150 REV CURV BASELINE & WB U.S.-150 CENTERLINE UTILIZED FOR STATION & OFFSET LABELS FOR WB US 150 TRAFFIC. PROPOSED WB U.S.-150 REV CURV BASELINE LABELS NOTED WITH AN *.

LEGEND

- TEMPORARY DITCH CHECK
- INLET AND PIPE PROTECTION / INLET FILTERS
- TEMPORARY FENCE
- FLOW LINE FOR PROPOSED TEMPORARY DITCH
- TEMPORARY RAMP CONSTRUCTION LIMITS
- MULCH, METHOD 2
- TEMPORARY EROSION CONTROL SEEDING

LIN ENGINEERING,LTD. Consulting Engineers Westmont, Illinois	USER NAME = rober	DESIGNED - NH	REVISED -
		DRAWN - NH	REVISED -
	PLOT SCALE = 100.0000 ' / in.	CHECKED - ST	REVISED -
	PLOT DATE = 2/12/2025	DATE - 1/2025	REVISED -

STATE OF ILLINOIS
DEPARTMENT OF TRANSPORTATION

US 150 WESTBOUND McCLUGAGE BRIDGE PROJECT
TEMPORARY EROSION CONTROL PLAN

SCALE: 1"=50' | SHEET 2 OF 4 SHEETS | STA. TO STA.

F.A.P. RTE.	SECTION	COUNTY	TOTAL SHEETS	SHEET NO.
317	(15B-1)BP,BRR:(14HB-1)BRR	PEORIA/TAZEWELL	418	73
		CONTRACT NO. 68E44		
		ILLINOIS FED. AID PROJECT		

EX ℄ RAMP C

305+00

20+00

415+00

620+00

410+00

19

RAMP D

RAMP C

0 50 100 150

SCALE IN FEET

N

span 3

span 4

+42

713+86.17
231.64' LT

713+99.24
231.37' LT

CONSTRUCTION LIMITS TYP.

+20

+36

PR ℄ RAMP D

716+77.40
34.65' LT

716+75.55
24.48' LT

+65*

405+00

15+00

PR WB ℄ U.S. 150 REV CURV

713+60.98
24.14' LT

+67

+61*

+63*

+31

+50

CANOPY

706 707 708 709 710+00 711 712 713 714 715+00 716 717 718 719 720+00 200+00

196 197 198 199

300+00

2100+00

2105+00

2110+00

1100+00

1105+00

1210+00

+55

+58

+91

+57

+61

+78

+35

+43

EX EB ℄ U.S. 150

615+00

ADAMS STREET

RAMP A

RAMP B

1205+00

1505+00

LEGEND

- TEMPORARY DITCH CHECK
- INLET AND PIPE PROTECTION / INLET FILTERS
- FLOW LINE
- PERIMETER EROSION BARRIER
- MULCH, METHOD 2
- SEEDING, CLASS 2A
- HEAVY DUTY EROSION CONTROL BLANKET

NOTE:

1. INLET FILTERS TO BE USED IN ALL INLETS LOCATED IN PAVED AREAS.
2. EROSION CONTROL ITEMS TO REMAIN IN PLACE UNTIL ALL WORK IN AFFECTED AREAS IS COMPLETED AND GROUND COVER IS ESTABLISHED.
3. CONSTRUCTION OPERATIONS SHALL BE CONDUCTED IN SUCH A MANNER THAT EROSION AND WATER POLLUTION WILL BE MINIMIZED.
4. EXISTING EB U.S.-150 CENTERLINE UTILIZED FOR STATION & OFFSET LABELS FOR EB US 150 TRAFFIC. PROPOSED WB U.S.-150 REV CURV BASELINE & WB U.S.-150 CENTERLINE UTILIZED FOR STATION & OFFSET LABELS FOR WB US 150 TRAFFIC. PROPOSED WB U.S.-150 REV CURV BASELINE LABELS NOTED WITH AN *.

LIN ENGINEERING,LTD.
Consulting Engineers
Westmont, Illinois

USER NAME = jkeinn	DESIGNED - NH	REVISED -
	DRAWN - NH	REVISED -
PLOT SCALE = 100.0000 ' / in.	CHECKED - ST	REVISED -
PLOT DATE = 1/14/2025	DATE - 1/2025	REVISED -

STATE OF ILLINOIS
DEPARTMENT OF TRANSPORTATION

US 150 WESTBOUND McCLUGAGE BRIDGE PROJECT
PERMANENT EROSION CONTROL PLAN

SCALE: 1"=50' | SHEET 3 OF 4 SHEETS | STA. TO STA.

F.A.P. RTE.	SECTION	COUNTY	TOTAL SHEETS	SHEET NO.
317	(15B-1)BP,BRR;(14HB-1)BRR	PEORIA/TAZEWELL	418	74

CONTRACT NO. 68E44

ILLINOIS | FED. AID PROJECT

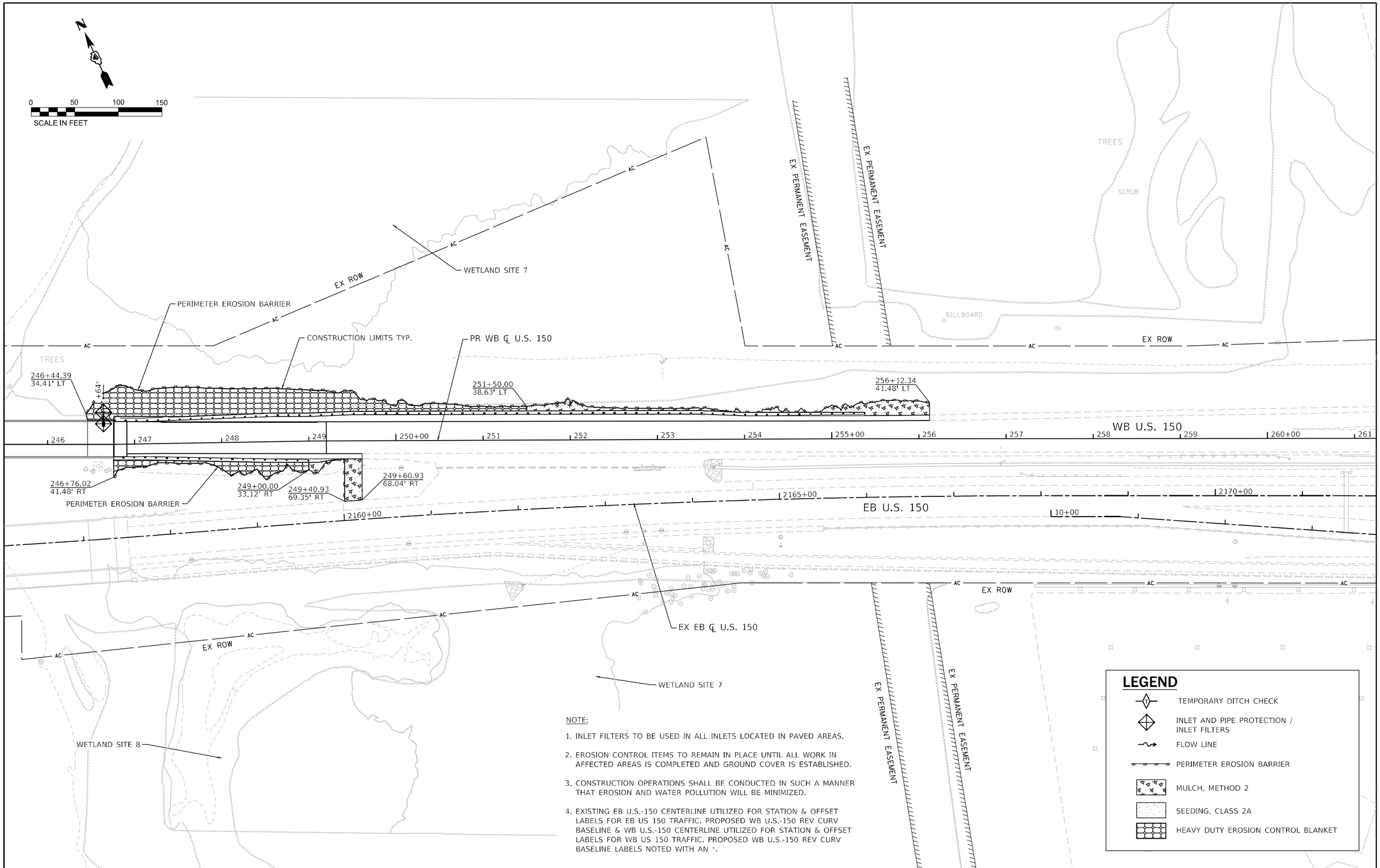

NOTE:

1. INLET FILTERS TO BE USED IN ALL INLETS LOCATED IN PAVED AREAS.
2. EROSION CONTROL ITEMS TO REMAIN IN PLACE UNTIL ALL WORK IN AFFECTED AREAS IS COMPLETED AND GROUND COVER IS ESTABLISHED.
3. CONSTRUCTION OPERATIONS SHALL BE CONDUCTED IN SUCH A MANNER THAT EROSION AND WATER POLLUTION WILL BE MINIMIZED.
4. EXISTING EB U.S.-150 CENTERLINE UTILIZED FOR STATION & OFFSET LABELS FOR EB US 150 TRAFFIC. PROPOSED WB U.S.-150 REV CURV BASELINE & WB U.S.-150 CENTERLINE UTILIZED FOR STATION & OFFSET LABELS FOR WB US 150 TRAFFIC. PROPOSED WB U.S.-150 REV CURV BASELINE LABELS NOTED WITH AN *.

LIN ENGINEERING,LTD. Consulting Engineers Westmont, Illinois	USER NAME = jkeinn	DESIGNED - NH	REVISED -
		DRAWN - NH	REVISED -
	PLOT SCALE = 100.0000 ' / in.	CHECKED - ST	REVISED -
	PLOT DATE = 1/14/2025	DATE - 1/2025	REVISED -

STATE OF ILLINOIS
DEPARTMENT OF TRANSPORTATION

US 150 WESTBOUND McCLUGAGE BRIDGE PROJECT
PERMANENT EROSION CONTROL PLAN

SCALE: 1"=50' | SHEET 4 OF 4 SHEETS | STA. TO STA.

F.A.P. RTE.	SECTION	COUNTY	TOTAL SHEETS	SHEET NO.
317	(15B-1)BP,BRR;(14HB-1)BRR	PEORIA/TAZEWELL	418	75

CONTRACT NO. 68E44

ILLINOIS FED. AID PROJECT

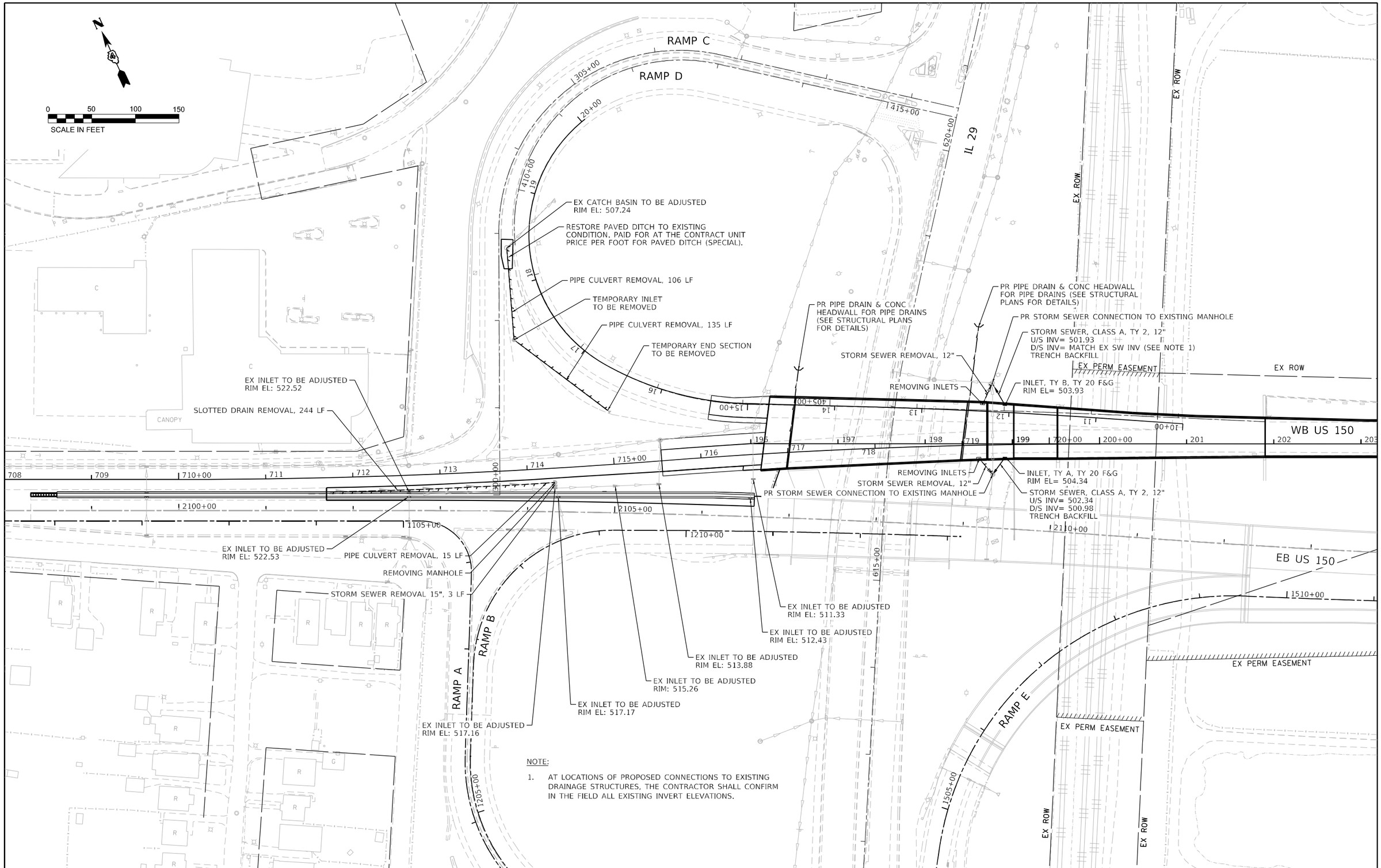

NOTE:

1. AT LOCATIONS OF PROPOSED CONNECTIONS TO EXISTING DRAINAGE STRUCTURES, THE CONTRACTOR SHALL CONFIRM IN THE FIELD ALL EXISTING INVERT ELEVATIONS.

LIN ENGINEERING,LTD. Consulting Engineers Westmont, Illinois	USER NAME = rober	DESIGNED - NH	REVISED -
		DRAWN - NH	REVISED -
	PLOT SCALE = 100.0000 ' / in.	CHECKED - ST	REVISED -
	PLOT DATE = 1/29/2025	DATE - 1/2025	REVISED -

STATE OF ILLINOIS
DEPARTMENT OF TRANSPORTATION

US 150 WESTBOUND McCLUGAGE BRIDGE PROJECT
DRAINAGE PLAN

SCALE: 1"=50' | SHEET 1 OF 2 SHEETS | STA. 196+00.00 TO STA. 203+18.79

F.A.P. RTE.	SECTION	COUNTY	TOTAL SHEETS	SHEET NO.
317	(15B-1)BP,BRR;(14HB-1)BRR	PEORIA/TAZEWELL	418	76
		CONTRACT NO. 68E44		
		ILLINOIS FED. AID PROJECT		

A PR TY G INL BOX
(SEE HWY STD 610001)
PR PIPE DRAIN 12"
PR METAL FLARED
END SECTION 12"
INL RIM ELEV = 469.65

NOTE: EX INLET, PIPE DRAIN, &
END SECTION SHALL BE REMOVED

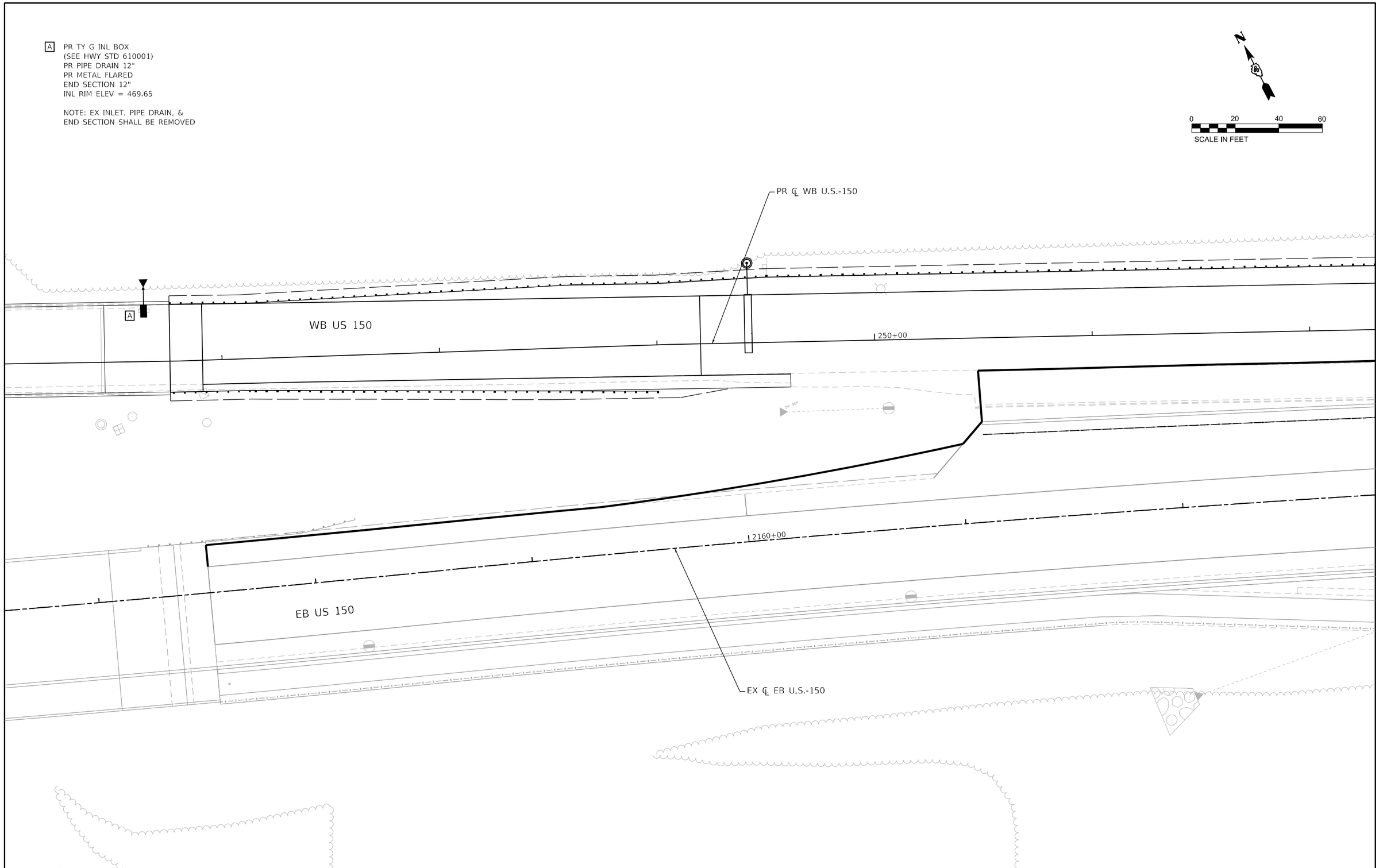

LIN ENGINEERING,LTD. Consulting Engineers Westmont, Illinois	USER NAME = jkehn	DESIGNED - NH	REVISED -	STATE OF ILLINOIS DEPARTMENT OF TRANSPORTATION	US 150 WESTBOUND McCLUGAGE BRIDGE PROJECT DRAINAGE PLAN	F.A.P. RTE.	SECTION	COUNTY	TOTAL SHEETS / SHEET NO.
		DRAWN - NH	REVISED -			317	(15B-1)BP,BRR:(14HB-1)BRR	PEORIA/TAZEWELL	418 / 77
	PLOT SCALE = 40.0000 ' / in.	CHECKED - ST	REVISED -					CONTRACT NO. 68E44	
	PLOT DATE = 1/14/2025	DATE - 1/2025	REVISED -		SCALE: 1"=20' SHEET 2 OF 2 SHEETS STA. 246+00.00 TO STA. 252+30.21		ILLINOIS FED. AID PROJECT		

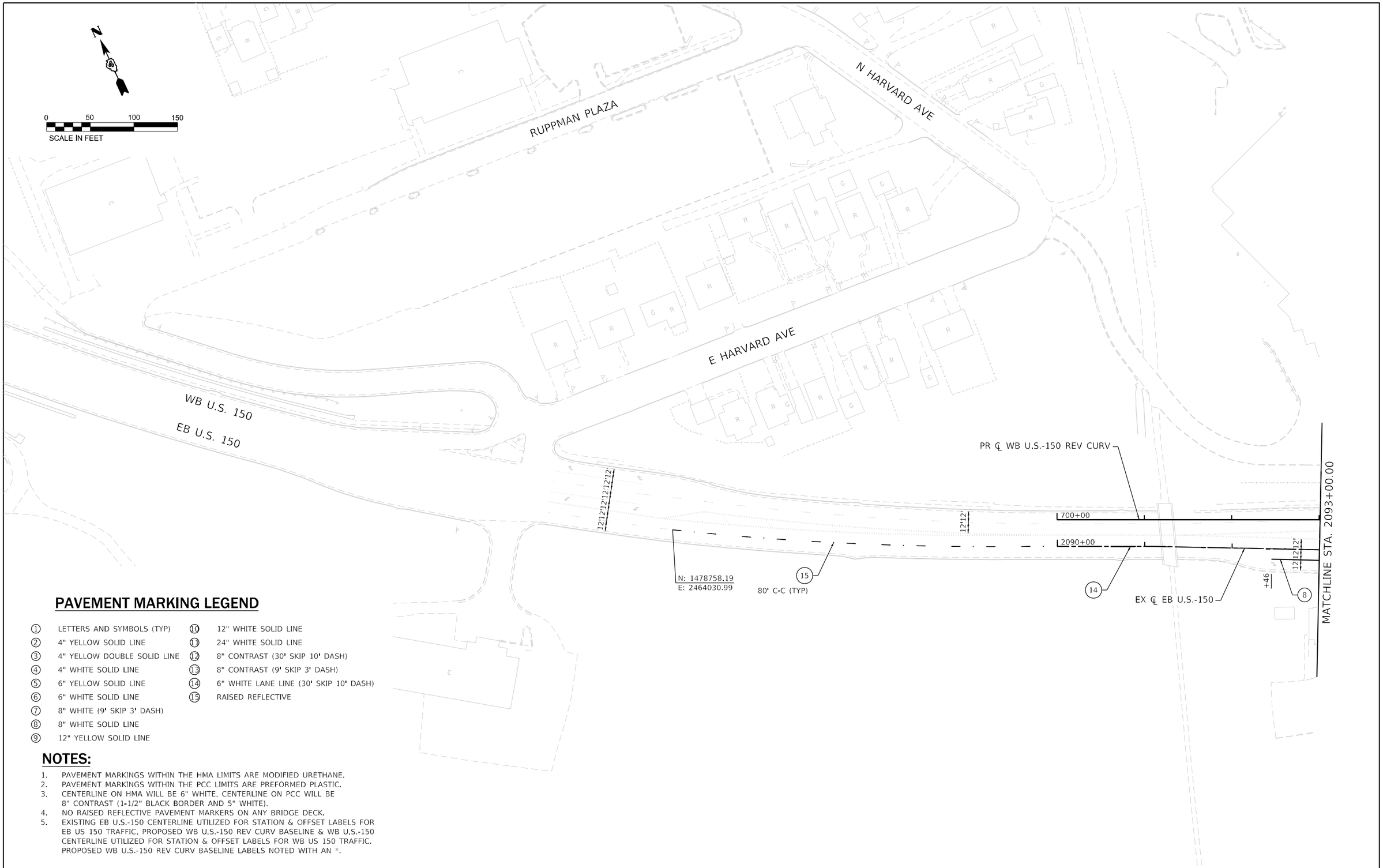

PAVEMENT MARKING LEGEND

1. LETTERS AND SYMBOLS (TYP)
2. 4" YELLOW SOLID LINE
3. 4" YELLOW DOUBLE SOLID LINE
4. 4" WHITE SOLID LINE
5. 6" YELLOW SOLID LINE
6. 6" WHITE SOLID LINE
7. 8" WHITE (9' SKIP 3' DASH)
8. 8" WHITE SOLID LINE
9. 12" YELLOW SOLID LINE
10. 12" WHITE SOLID LINE
11. 24" WHITE SOLID LINE
12. 8" CONTRAST (30' SKIP 10' DASH)
13. 8" CONTRAST (9' SKIP 3' DASH)
14. 6" WHITE LANE LINE (30' SKIP 10' DASH)
15. RAISED REFLECTIVE

NOTES:

1. PAVEMENT MARKINGS WITHIN THE HMA LIMITS ARE MODIFIED URETHANE.
2. PAVEMENT MARKINGS WITHIN THE PCC LIMITS ARE PREFORMED PLASTIC.
3. CENTERLINE ON HMA WILL BE 6" WHITE. CENTERLINE ON PCC WILL BE 8" CONTRAST (1-1/2" BLACK BORDER AND 5" WHITE).
4. NO RAISED REFLECTIVE PAVEMENT MARKERS ON ANY BRIDGE DECK.
5. EXISTING EB U.S.-150 CENTERLINE UTILIZED FOR STATION & OFFSET LABELS FOR EB US 150 TRAFFIC. PROPOSED WB U.S.-150 REV CURV BASELINE & WB U.S.-150 CENTERLINE UTILIZED FOR STATION & OFFSET LABELS FOR WB US 150 TRAFFIC. PROPOSED WB U.S.-150 REV CURV BASELINE LABELS NOTED WITH AN *.

LIN ENGINEERING,LTD. Consulting Engineers Westmont, Illinois	USER NAME = jkein	DESIGNED - JK	REVISED -	STATE OF ILLINOIS DEPARTMENT OF TRANSPORTATION	US 150 WESTBOUND McCLUGAGE BRIDGE PROJECT US 150 PAVEMENT MARKING PLANS
		DRAWN - JK	REVISED -		
	PLOT SCALE = 100.0000 ' / in.	CHECKED - RC	REVISED -		
	PLOT DATE = 1/14/2025	DATE - 1/2025	REVISED -		SCALE: 1"=50' SHEET 1 OF 9 SHEETS STA. 2090+00 TO STA. 2093+00

F.A.P. RTE.	SECTION	COUNTY	TOTAL SHEETS	SHEET NO.
317	(15B-1)BP,BRR;(14HB-1)BRR	PEORIA/TAZEWELL	418	78
		CONTRACT NO. 68E44		
		ILLINOIS FED. AID PROJECT		

PAVEMENT MARKING LEGEND

1. LETTERS AND SYMBOLS (TYP)
2. 4" YELLOW SOLID LINE
3. 4" YELLOW DOUBLE SOLID LINE
4. 4" WHITE SOLID LINE
5. 6" YELLOW SOLID LINE
6. 6" WHITE SOLID LINE
7. 8" WHITE (9' SKIP 3' DASH)
8. 8" WHITE SOLID LINE
9. 12" YELLOW SOLID LINE
10. 12" WHITE SOLID LINE
11. 24" WHITE SOLID LINE
12. 8" CONTRAST (30' SKIP 10' DASH)
13. 8" CONTRAST (9' SKIP 3' DASH)
14. 6" WHITE LANE LINE (30' SKIP 10' DASH)
15. RAISED REFLECTIVE

NOTES:

1. PAVEMENT MARKINGS WITHIN THE HMA LIMITS ARE MODIFIED URETHANE.
2. PAVEMENT MARKINGS WITHIN THE PCC LIMITS ARE PREFORMED PLASTIC.
3. CENTERLINE ON HMA WILL BE 6" WHITE. CENTERLINE ON PCC WILL BE 8" CONTRAST (1-1/2" BLACK BORDER AND 5" WHITE).
4. NO RAISED REFLECTIVE PAVEMENT MARKERS ON ANY BRIDGE DECK.
5. EXISTING EB U.S.-150 CENTERLINE UTILIZED FOR STATION & OFFSET LABELS FOR EB US 150 TRAFFIC. PROPOSED WB U.S.-150 REV CURV BASELINE & WB U.S.-150 CENTERLINE UTILIZED FOR STATION & OFFSET LABELS FOR WB US 150 TRAFFIC. PROPOSED WB U.S.-150 REV CURV BASELINE LABELS NOTED WITH AN *.

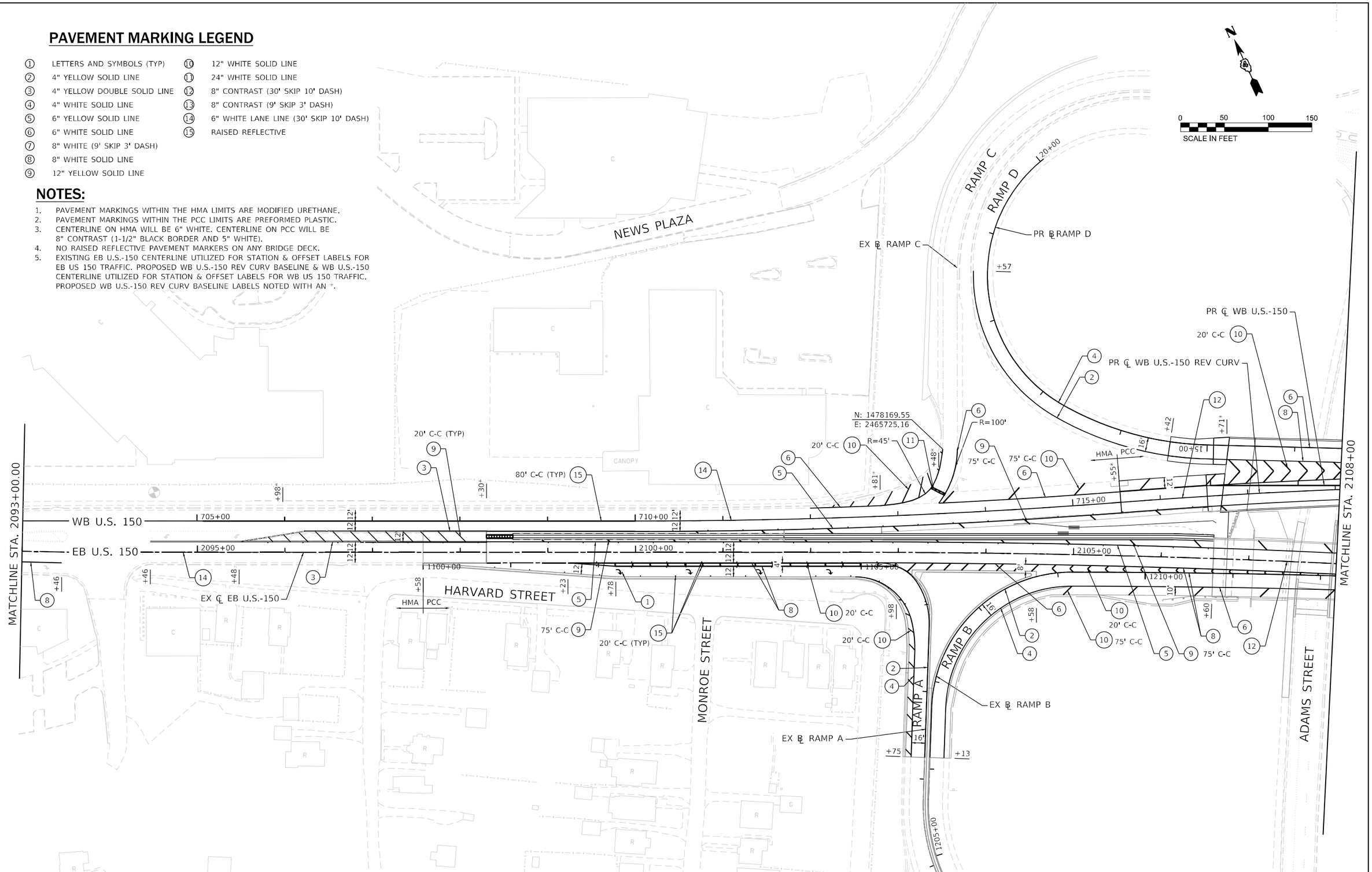

LIN ENGINEERING,LTD. Consulting Engineers Westmont, Illinois	USER NAME = jkeinn	DESIGNED - JK	REVISED -	STATE OF ILLINOIS DEPARTMENT OF TRANSPORTATION	US 150 WESTBOUND McCLUGAGE BRIDGE PROJECT US 150 PAVEMENT MARKING PLANS	F.A.P. RTE.	SECTION	COUNTY	TOTAL SHEETS / SHEET NO.
		DRAWN - JK	REVISED -			317	(15B-1)BP,BRR;(14HB-1)BRR	PEORIA/TAZEWELL	418 / 79
	PLOT SCALE = 100.0000 ' / in.	CHECKED - RC	REVISED -					CONTRACT NO. 68E44	
	PLOT DATE = 1/14/2025	DATE - 1/2025	REVISED -		SCALE: 1"=50' SHEET 2 OF 9 SHEETS STA. 2093+00 TO STA. 2108+00		ILLINOIS	FED. AID PROJECT	

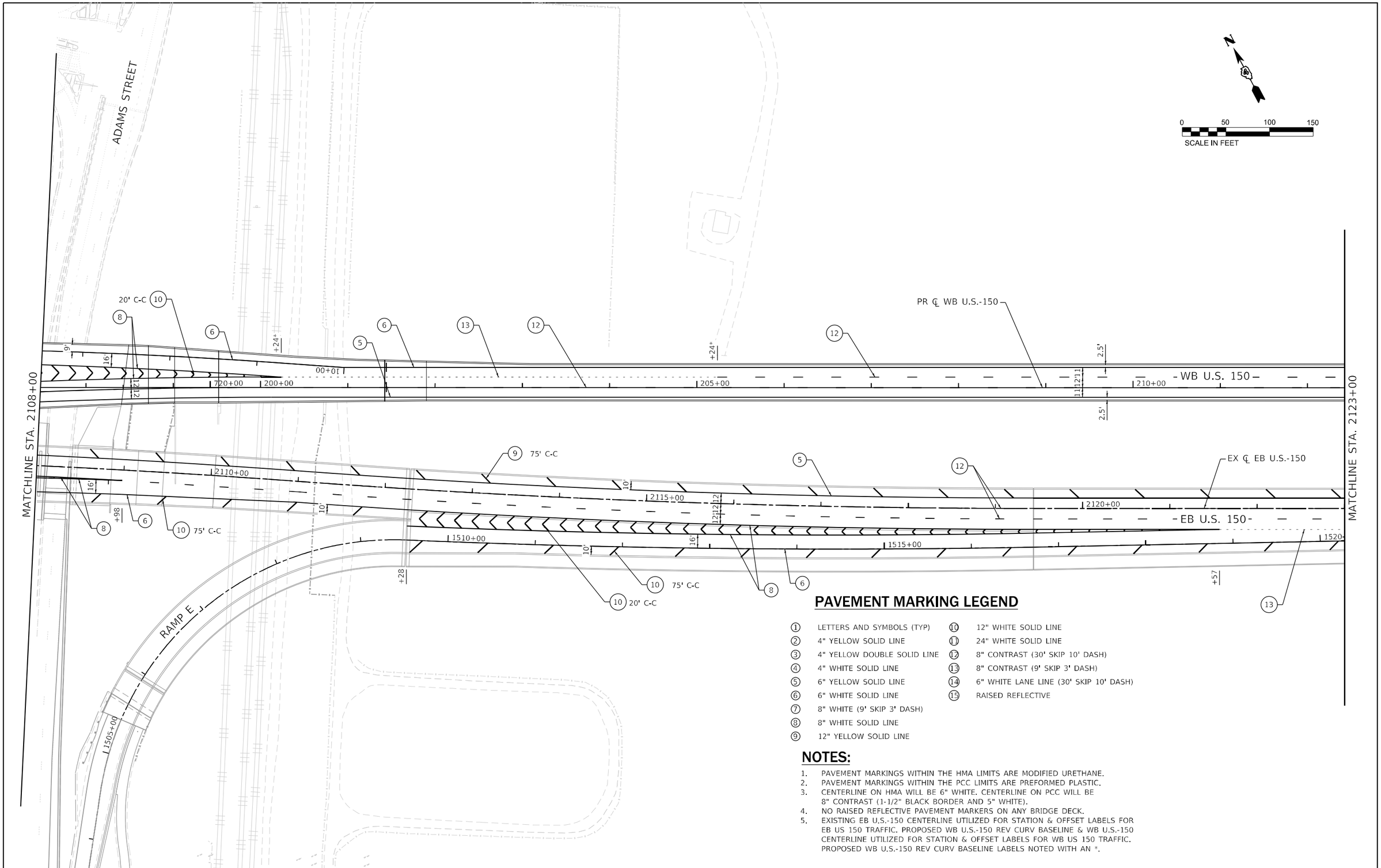

PAVEMENT MARKING LEGEND

1	LETTERS AND SYMBOLS (TYP)	10	12" WHITE SOLID LINE
2	4" YELLOW SOLID LINE	11	24" WHITE SOLID LINE
3	4" YELLOW DOUBLE SOLID LINE	12	8" CONTRAST (30' SKIP 10' DASH)
4	4" WHITE SOLID LINE	13	8" CONTRAST (9' SKIP 3' DASH)
5	6" YELLOW SOLID LINE	14	6" WHITE LANE LINE (30' SKIP 10' DASH)
6	6" WHITE SOLID LINE	15	RAISED REFLECTIVE
7	8" WHITE (9' SKIP 3' DASH)		
8	8" WHITE SOLID LINE		
9	12" YELLOW SOLID LINE		

NOTES:

1. PAVEMENT MARKINGS WITHIN THE HMA LIMITS ARE MODIFIED URETHANE.
2. PAVEMENT MARKINGS WITHIN THE PCC LIMITS ARE PREFORMED PLASTIC.
3. CENTERLINE ON HMA WILL BE 6" WHITE. CENTERLINE ON PCC WILL BE 8" CONTRAST (1-1/2" BLACK BORDER AND 5" WHITE).
4. NO RAISED REFLECTIVE PAVEMENT MARKERS ON ANY BRIDGE DECK.
5. EXISTING EB U.S.-150 CENTERLINE UTILIZED FOR STATION & OFFSET LABELS FOR EB US 150 TRAFFIC. PROPOSED WB U.S.-150 REV CURV BASELINE & WB U.S.-150 CENTERLINE UTILIZED FOR STATION & OFFSET LABELS FOR WB US 150 TRAFFIC. PROPOSED WB U.S.-150 REV CURV BASELINE LABELS NOTED WITH AN *.

PAVEMENT MARKING LEGEND

1. LETTERS AND SYMBOLS (TYP)
2. 4" YELLOW SOLID LINE
3. 4" YELLOW DOUBLE SOLID LINE
4. 4" WHITE SOLID LINE
5. 6" YELLOW SOLID LINE
6. 6" WHITE SOLID LINE
7. 8" WHITE (9' SKIP 3' DASH)
8. 8" WHITE SOLID LINE
9. 12" YELLOW SOLID LINE
10. 12" WHITE SOLID LINE
11. 24" WHITE SOLID LINE
12. 8" CONTRAST (30' SKIP 10' DASH)
13. 8" CONTRAST (9' SKIP 3' DASH)
14. 6" WHITE LANE LINE (30' SKIP 10' DASH)
15. RAISED REFLECTIVE

NOTES:

1. PAVEMENT MARKINGS WITHIN THE HMA LIMITS ARE MODIFIED URETHANE.
2. PAVEMENT MARKINGS WITHIN THE PCC LIMITS ARE PREFORMED PLASTIC.
3. CENTERLINE ON HMA WILL BE 6" WHITE. CENTERLINE ON PCC WILL BE 8" CONTRAST (1-1/2" BLACK BORDER AND 5" WHITE).
4. NO RAISED REFLECTIVE PAVEMENT MARKERS ON ANY BRIDGE DECK.
5. EXISTING EB U.S.-150 CENTERLINE UTILIZED FOR STATION & OFFSET LABELS FOR EB US 150 TRAFFIC. PROPOSED WB U.S.-150 REV CURV BASELINE & WB U.S.-150 CENTERLINE UTILIZED FOR STATION & OFFSET LABELS FOR WB US 150 TRAFFIC. PROPOSED WB U.S.-150 REV CURV BASELINE LABELS NOTED WITH AN *.

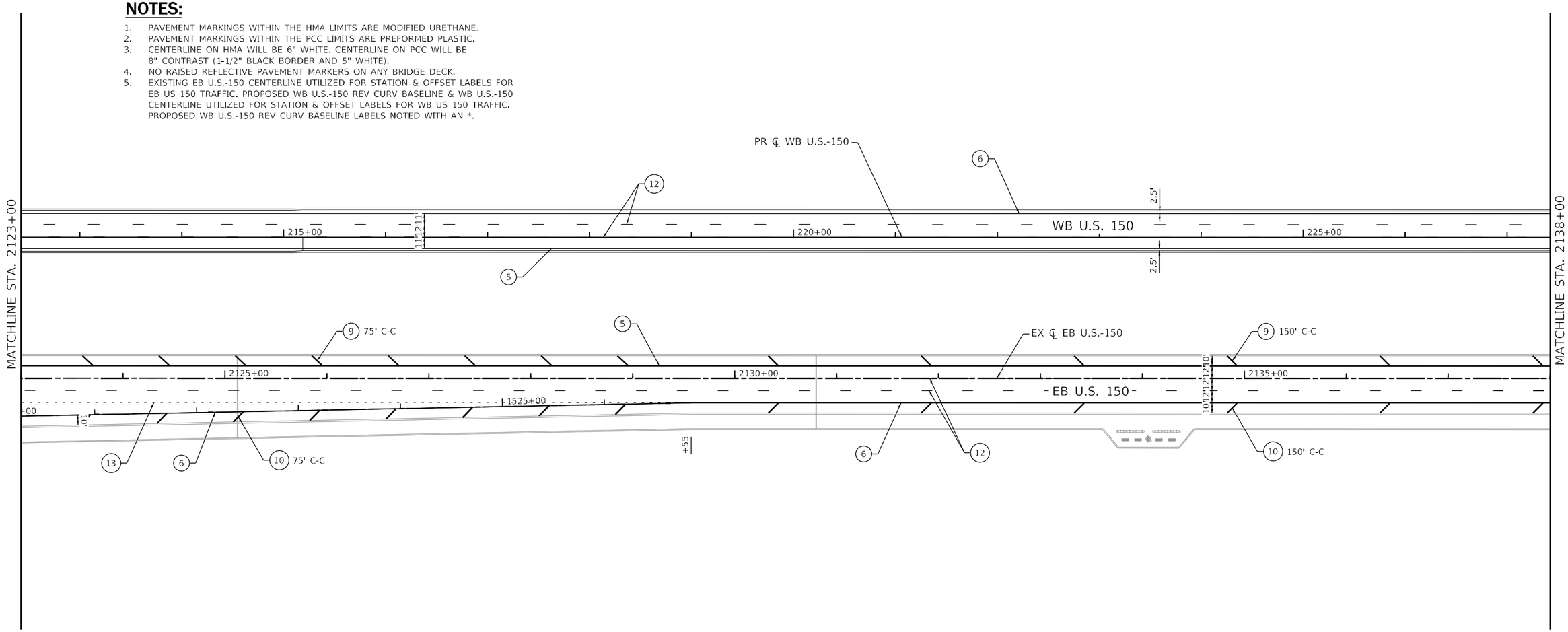

LIN ENGINEERING,LTD. Consulting Engineers Westmont, Illinois	USER NAME = jkeinn	DESIGNED - JK	REVISED -	STATE OF ILLINOIS DEPARTMENT OF TRANSPORTATION	US 150 WESTBOUND McCLUGAGE BRIDGE PROJECT US 150 PAVEMENT MARKING PLANS	F.A.P. RTE.	SECTION	COUNTY	TOTAL SHEETS	SHEET NO.
		DRAWN - JK	REVISED -			317	(15B-1)BP,BRR;(14HB-1)BRR	PEORIA/TAZEWELL	418	81
	PLOT SCALE = 100.0000 ' / in.	CHECKED - RC	REVISED -			CONTRACT NO. 68E44				
	PLOT DATE = 1/14/2025	DATE - 1/2025	REVISED -		SCALE: 1"=50' SHEET 4 OF 9 SHEETS STA. 2123+00 TO STA. 2138+00	ILLINOIS FED. AID PROJECT				

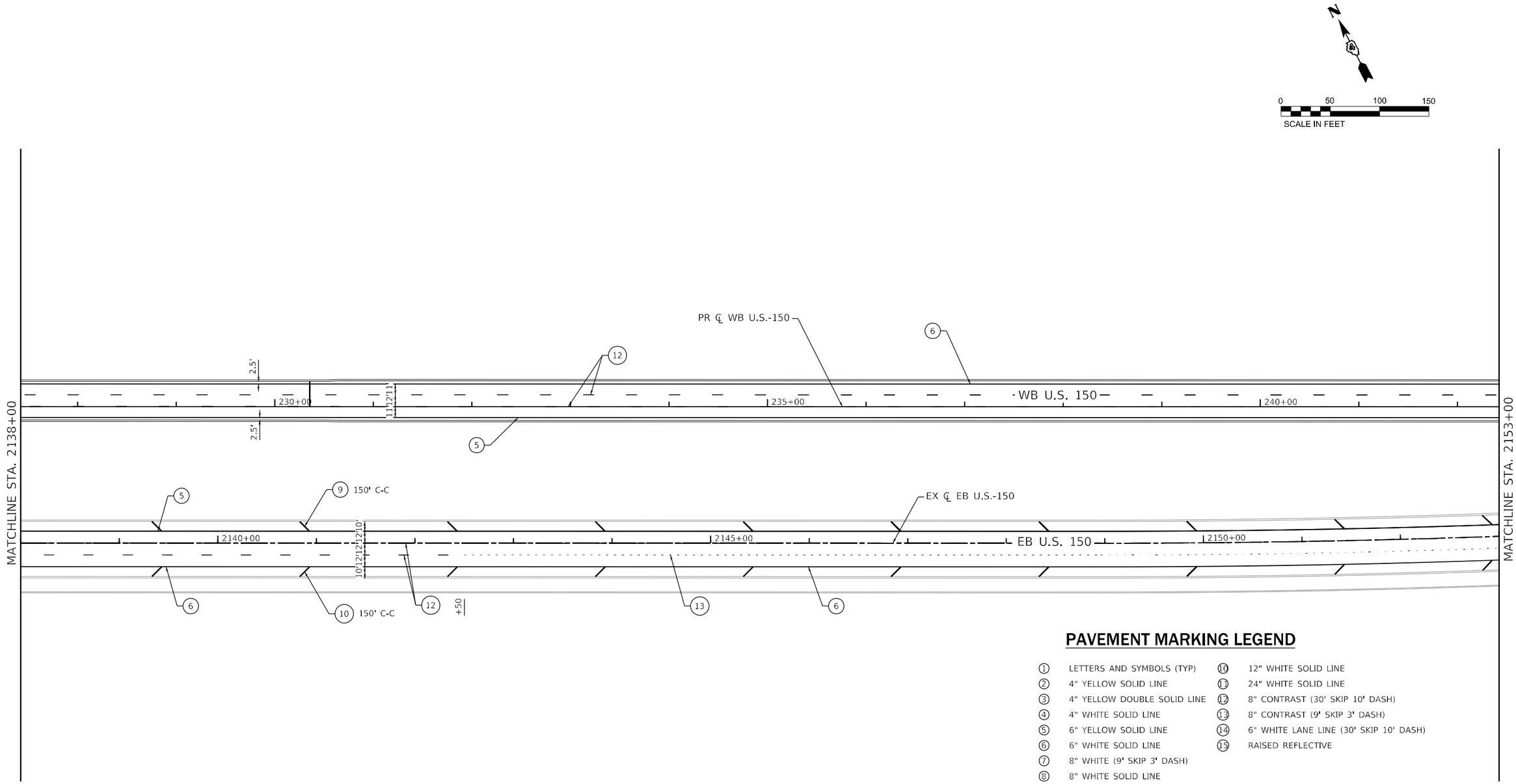

PAVEMENT MARKING LEGEND

1	LETTERS AND SYMBOLS (TYP)	10	12" WHITE SOLID LINE
2	4" YELLOW SOLID LINE	11	24" WHITE SOLID LINE
3	4" YELLOW DOUBLE SOLID LINE	12	8" CONTRAST (30' SKIP 10' DASH)
4	4" WHITE SOLID LINE	13	8" CONTRAST (9' SKIP 3' DASH)
5	6" YELLOW SOLID LINE	14	6" WHITE LANE LINE (30' SKIP 10' DASH)
6	6" WHITE SOLID LINE	15	RAISED REFLECTIVE
7	8" WHITE (9' SKIP 3' DASH)		
8	8" WHITE SOLID LINE		
9	12" YELLOW SOLID LINE		

NOTES:

1. PAVEMENT MARKINGS WITHIN THE HMA LIMITS ARE MODIFIED URETHANE.
2. PAVEMENT MARKINGS WITHIN THE PCC LIMITS ARE PREFORMED PLASTIC.
3. CENTERLINE ON HMA WILL BE 6" WHITE. CENTERLINE ON PCC WILL BE 8" CONTRAST (1-1/2" BLACK BORDER AND 5" WHITE).
4. NO RAISED REFLECTIVE PAVEMENT MARKERS ON ANY BRIDGE DECK.
5. EXISTING EB U.S.-150 CENTERLINE UTILIZED FOR STATION & OFFSET LABELS FOR EB US 150 TRAFFIC. PROPOSED WB U.S.-150 REV CURV BASELINE & WB U.S.-150 CENTERLINE UTILIZED FOR STATION & OFFSET LABELS FOR WB US 150 TRAFFIC. PROPOSED WB U.S.-150 REV CURV BASELINE LABELS NOTED WITH AN *.

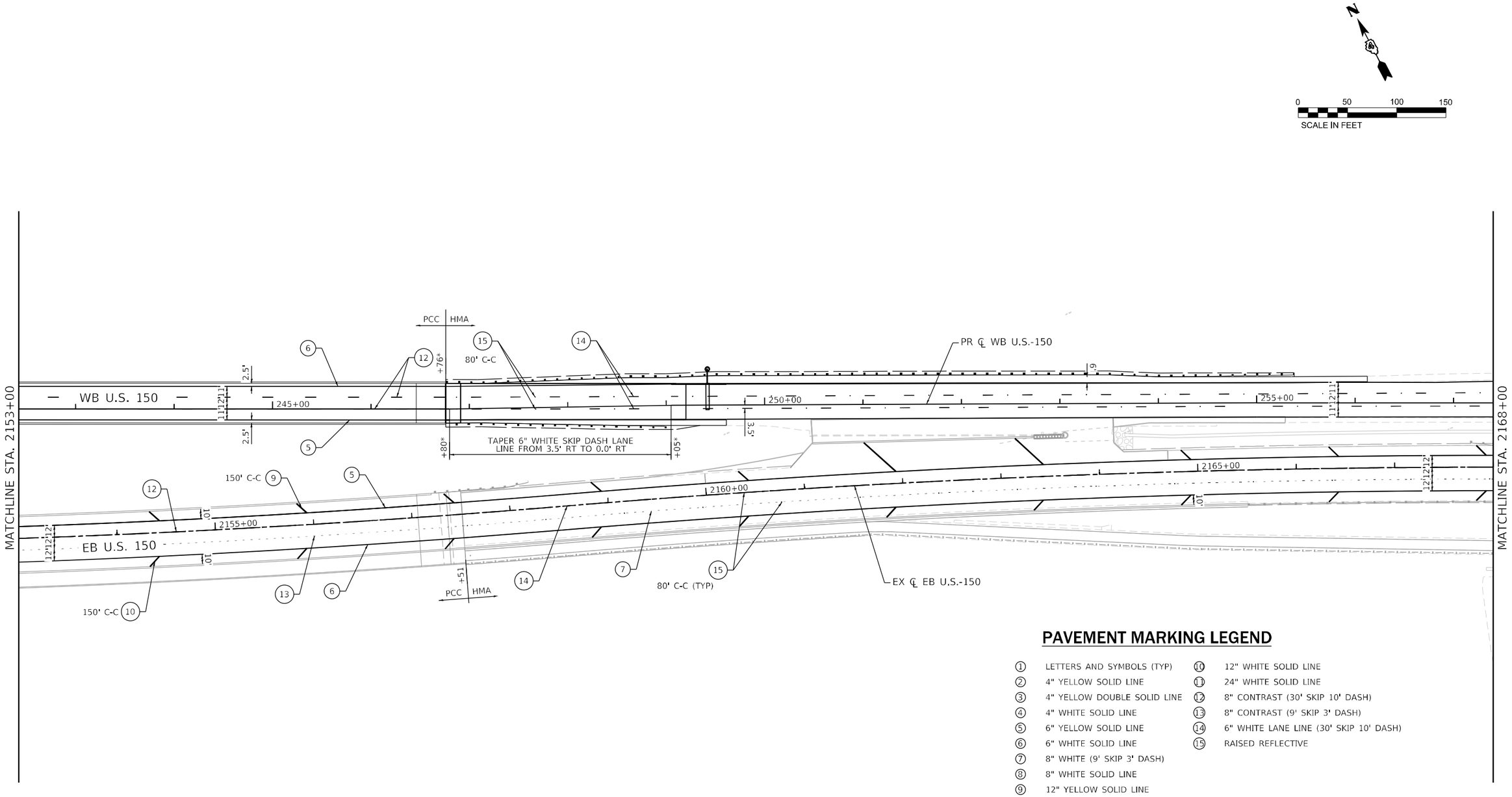

PAVEMENT MARKING LEGEND

1. LETTERS AND SYMBOLS (TYP)
2. 4" YELLOW SOLID LINE
3. 4" YELLOW DOUBLE SOLID LINE
4. 4" WHITE SOLID LINE
5. 6" YELLOW SOLID LINE
6. 6" WHITE SOLID LINE
7. 8" WHITE (9' SKIP 3' DASH)
8. 8" WHITE SOLID LINE
9. 12" YELLOW SOLID LINE
10. 12" WHITE SOLID LINE
11. 24" WHITE SOLID LINE
12. 8" CONTRAST (30' SKIP 10' DASH)
13. 8" CONTRAST (9' SKIP 3' DASH)
14. 6" WHITE LANE LINE (30' SKIP 10' DASH)
15. RAISED REFLECTIVE

NOTES:

1. PAVEMENT MARKINGS WITHIN THE HMA LIMITS ARE MODIFIED URETHANE.
2. PAVEMENT MARKINGS WITHIN THE PCC LIMITS ARE PREFORMED PLASTIC.
3. CENTERLINE ON HMA WILL BE 6" WHITE. CENTERLINE ON PCC WILL BE 8" CONTRAST (1-1/2" BLACK BORDER AND 5" WHITE).
4. NO RAISED REFLECTIVE PAVEMENT MARKERS ON ANY BRIDGE DECK.
5. EXISTING EB U.S.-150 CENTERLINE UTILIZED FOR STATION & OFFSET LABELS FOR EB US 150 TRAFFIC. PROPOSED WB U.S.-150 REV CURV BASELINE & WB U.S.-150 CENTERLINE UTILIZED FOR STATION & OFFSET LABELS FOR WB US 150 TRAFFIC. PROPOSED WB U.S.-150 REV CURV BASELINE LABELS NOTED WITH AN *.

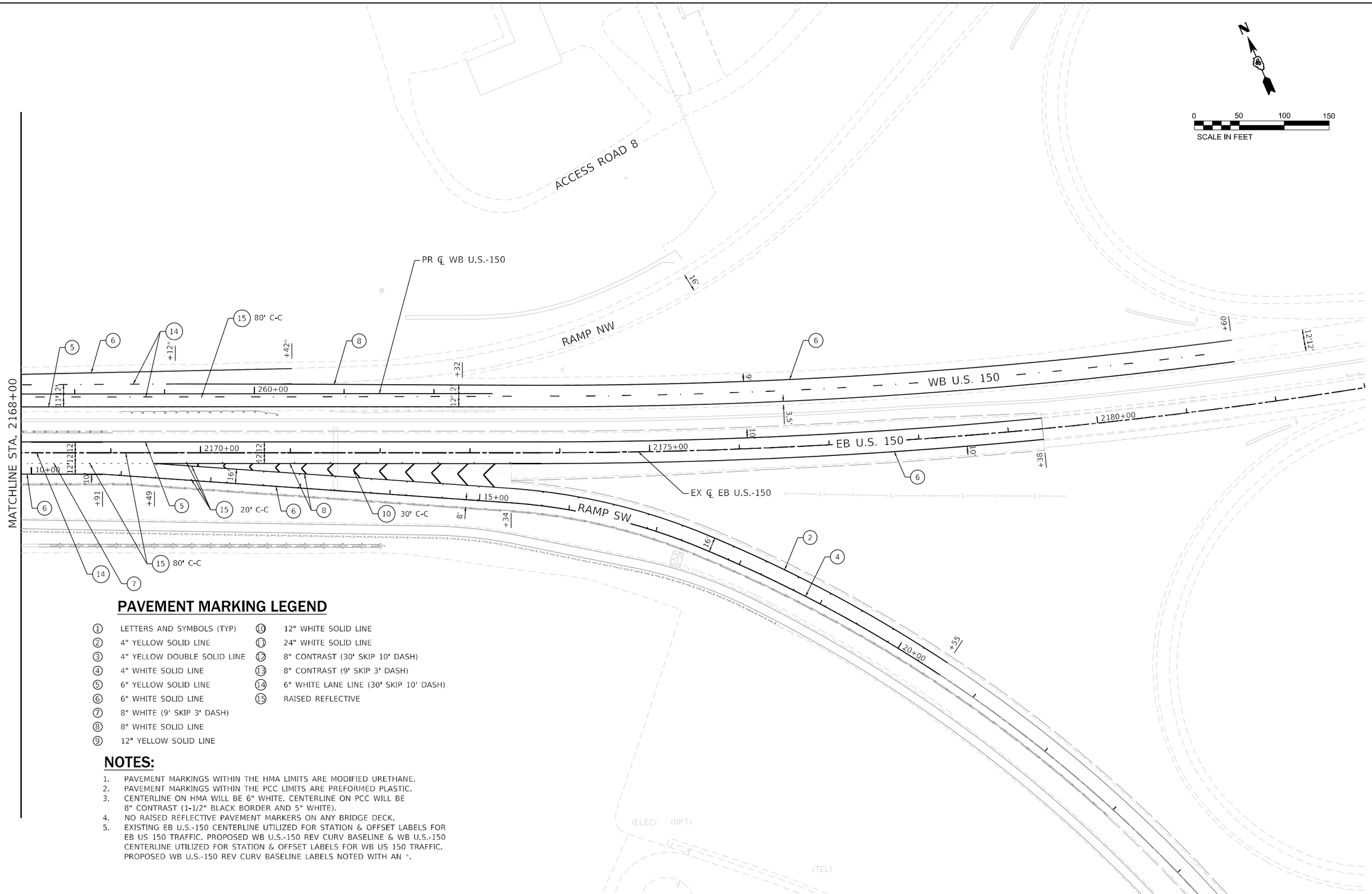

PAVEMENT MARKING LEGEND

1	LETTERS AND SYMBOLS (TYP)	10	12" WHITE SOLID LINE
2	4" YELLOW SOLID LINE	11	24" WHITE SOLID LINE
3	4" YELLOW DOUBLE SOLID LINE	12	8" CONTRAST (30' SKIP 10' DASH)
4	4" WHITE SOLID LINE	13	8" CONTRAST (9' SKIP 3' DASH)
5	6" YELLOW SOLID LINE	14	6" WHITE LANE LINE (30' SKIP 10' DASH)
6	6" WHITE SOLID LINE	15	RAISED REFLECTIVE
7	8" WHITE (9' SKIP 3' DASH)		
8	8" WHITE SOLID LINE		
9	12" YELLOW SOLID LINE		

NOTES:

1. PAVEMENT MARKINGS WITHIN THE HMA LIMITS ARE MODIFIED URETHANE.
2. PAVEMENT MARKINGS WITHIN THE PCC LIMITS ARE PREFORMED PLASTIC.
3. CENTERLINE ON HMA WILL BE 6" WHITE. CENTERLINE ON PCC WILL BE 8" CONTRAST (1-1/2" BLACK BORDER AND 5" WHITE).
4. NO RAISED REFLECTIVE PAVEMENT MARKERS ON ANY BRIDGE DECK.
5. EXISTING EB U.S.-150 CENTERLINE UTILIZED FOR STATION & OFFSET LABELS FOR EB US 150 TRAFFIC. PROPOSED WB U.S.-150 REV CURV BASELINE & WB U.S.-150 CENTERLINE UTILIZED FOR STATION & OFFSET LABELS FOR WB US 150 TRAFFIC. PROPOSED WB U.S.-150 REV CURV BASELINE LABELS NOTED WITH AN *.

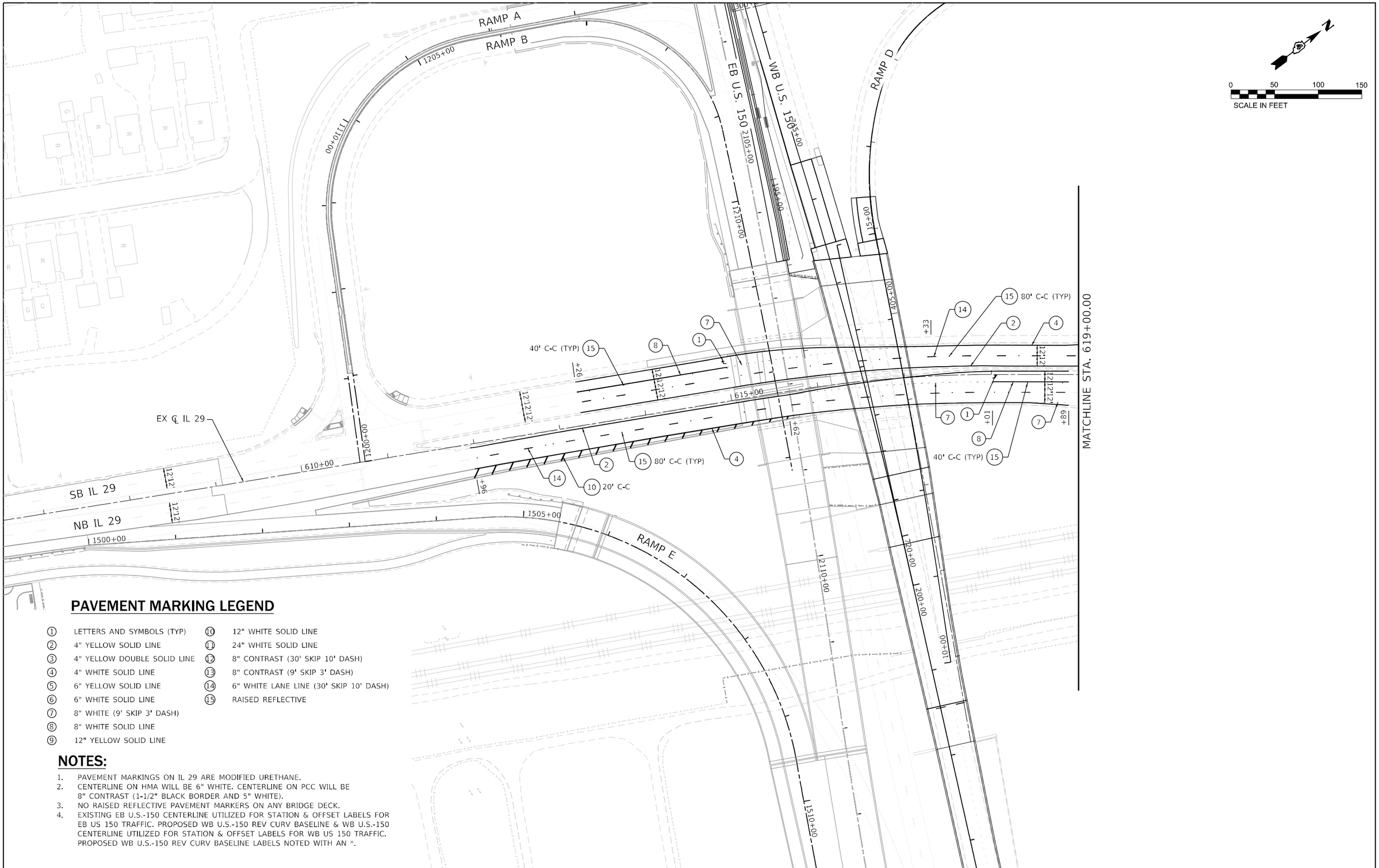

PAVEMENT MARKING LEGEND

1. LETTERS AND SYMBOLS (TYP)
2. 4" YELLOW SOLID LINE
3. 4" YELLOW DOUBLE SOLID LINE
4. 4" WHITE SOLID LINE
5. 6" YELLOW SOLID LINE
6. 6" WHITE SOLID LINE
7. 8" WHITE (9' SKIP 3' DASH)
8. 8" WHITE SOLID LINE
9. 12" YELLOW SOLID LINE
10. 12" WHITE SOLID LINE
11. 24" WHITE SOLID LINE
12. 8" CONTRAST (30' SKIP 10' DASH)
13. 8" CONTRAST (9' SKIP 3' DASH)
14. 6" WHITE LANE LINE (30' SKIP 10' DASH)
15. RAISED REFLECTIVE

NOTES:

1. PAVEMENT MARKINGS ON IL 29 ARE MODIFIED URETHANE.
2. CENTERLINE ON HMA WILL BE 6" WHITE. CENTERLINE ON PCC WILL BE 8" CONTRAST (1-1/2" BLACK BORDER AND 5" WHITE).
3. NO RAISED REFLECTIVE PAVEMENT MARKERS ON ANY BRIDGE DECK.
4. EXISTING EB U.S.-150 CENTERLINE UTILIZED FOR STATION & OFFSET LABELS FOR EB US 150 TRAFFIC. PROPOSED WB U.S.-150 REV CURV BASELINE & WB U.S.-150 CENTERLINE UTILIZED FOR STATION & OFFSET LABELS FOR WB US 150 TRAFFIC. PROPOSED WB U.S.-150 REV CURV BASELINE LABELS NOTED WITH AN *.

LIN ENGINEERING,LTD. Consulting Engineers Westmont, Illinois	USER NAME = jkeihn	DESIGNED - JK	REVISED -
		DRAWN - JK	REVISED -
	PLOT SCALE = 100.0000 ' / in.	CHECKED - RC	REVISED -
	PLOT DATE = 1/14/2025	DATE - 1/2025	REVISED -

STATE OF ILLINOIS
DEPARTMENT OF TRANSPORTATION

US 150 WESTBOUND McCLUGAGE BRIDGE PROJECT
IL 29 PAVEMENT MARKING PLANS

SCALE: 1"=50' | SHEET 8 OF 9 SHEETS | STA. 606+52.60 TO STA. 619+00.00

F.A.P. RTE.	SECTION	COUNTY	TOTAL SHEETS	SHEET NO.
317	(15B-1)BP,BRR;(14HB-1)BRR	PEORIA/TAZEWELL	418	85

CONTRACT NO. 68E44

ILLINOIS | FED. AID PROJECT

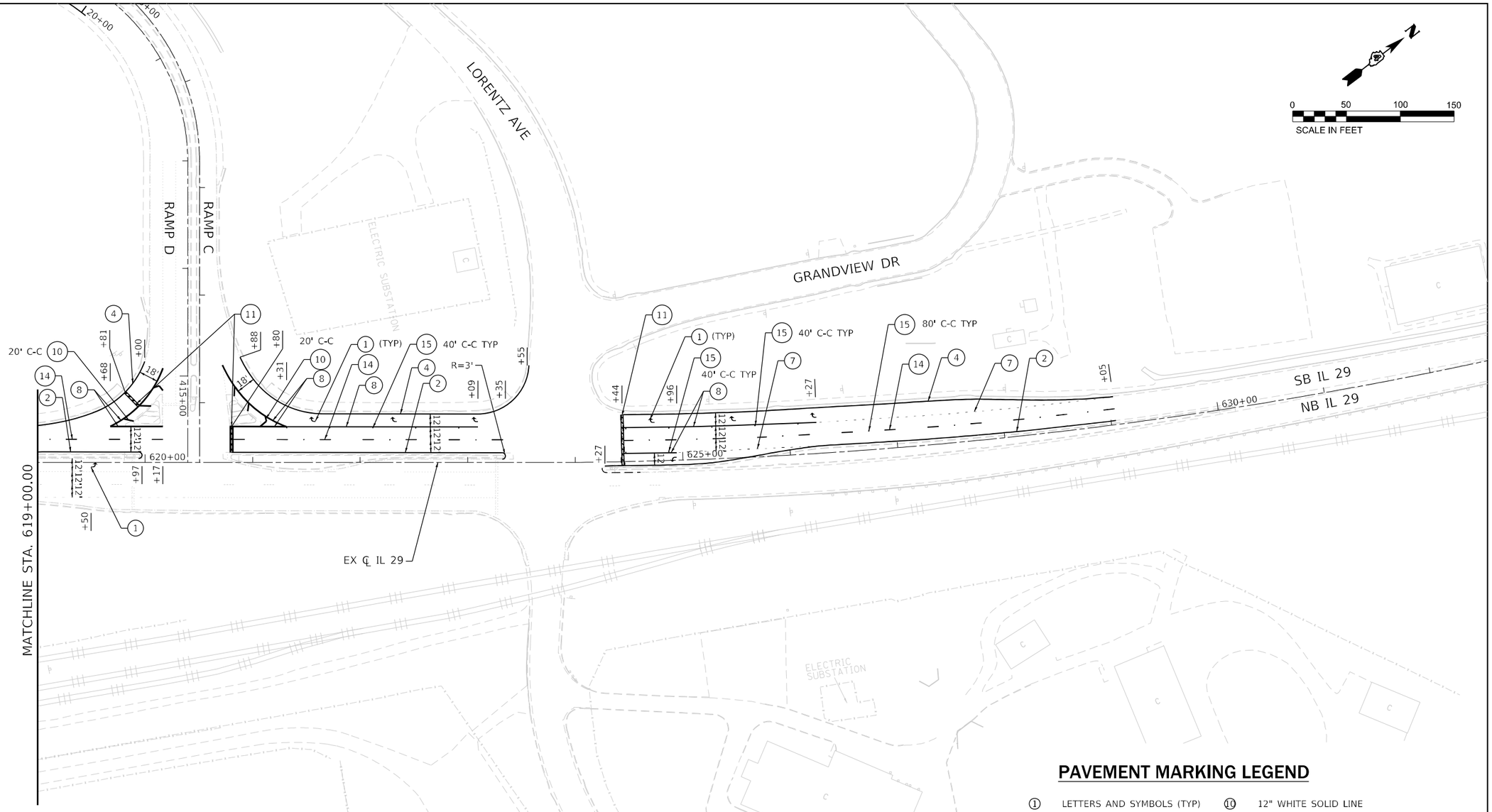

PAVEMENT MARKING LEGEND

1	LETTERS AND SYMBOLS (TYP)	10	12" WHITE SOLID LINE
2	4" YELLOW SOLID LINE	11	24" WHITE SOLID LINE
3	4" YELLOW DOUBLE SOLID LINE	12	8" CONTRAST (30' SKIP 10' DASH)
4	4" WHITE SOLID LINE	13	8" CONTRAST (9' SKIP 3' DASH)
5	6" YELLOW SOLID LINE	14	6" WHITE LANE LINE (30' SKIP 10' DASH)
6	6" WHITE SOLID LINE	15	RAISED REFLECTIVE
7	8" WHITE (9' SKIP 3' DASH)		
8	8" WHITE SOLID LINE		
9	12" YELLOW SOLID LINE		

NOTES:

1. PAVEMENT MARKINGS ON IL 29 ARE MODIFIED URETHANE.
2. CENTERLINE ON HMA WILL BE 6" WHITE. CENTERLINE ON PCC WILL BE 8" CONTRAST (1-1/2" BLACK BORDER AND 5" WHITE).
3. NO RAISED REFLECTIVE PAVEMENT MARKERS ON ANY BRIDGE DECK.
4. EXISTING EB U.S.-150 CENTERLINE UTILIZED FOR STATION & OFFSET LABELS FOR EB US 150 TRAFFIC. PROPOSED WB U.S.-150 REV CURV BASELINE & WB U.S.-150 CENTERLINE UTILIZED FOR STATION & OFFSET LABELS FOR WB US 150 TRAFFIC. PROPOSED WB U.S.-150 REV CURV BASELINE LABELS NOTED WITH AN *.

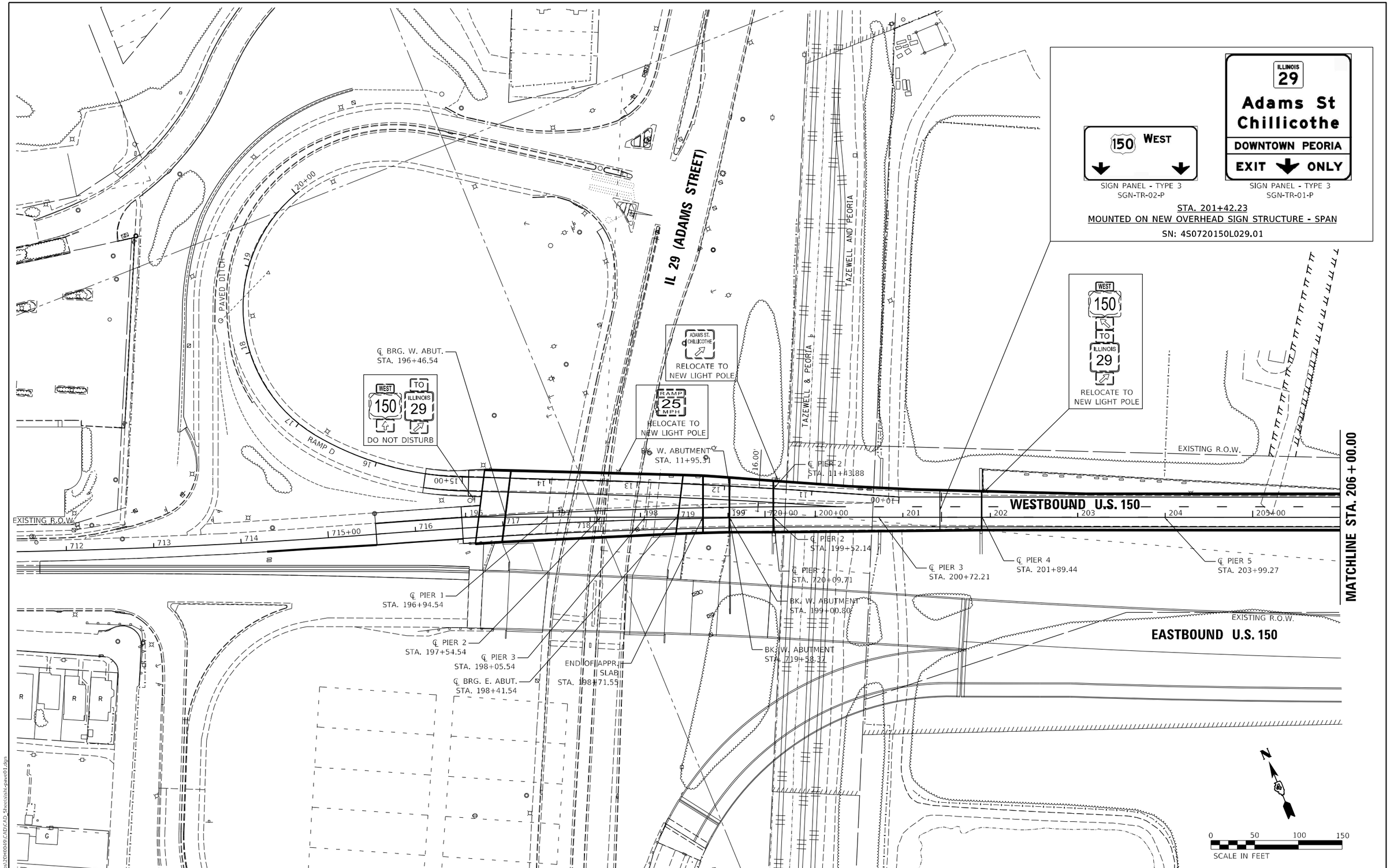

HANSON
Hanson Professional Services Inc.

LAYOUT	RLA	10/31/2023
DRAWN	CM/RLA	1/13/2025
REVIEWED	MGD	1/14/2025

MODEL: Default
FILE NAME: h:\projects\20H0049\CADD\CAD_Sheets\shk-jave01.dgn

USER NAME = Ander00846	DESIGNED - RLA	REVISED -	
	DRAWN - CM/RLA	REVISED -	
PLOT SCALE = 100.00 ' / in.	CHECKED - MGD	REVISED -	
PLOT DATE = 2/13/2025	DATE - 1/14/2025	REVISED -	

STATE OF ILLINOIS
DEPARTMENT OF TRANSPORTATION

WESTBOUND US 150 McCLUGAGE BRIDGE
SIGNING PLANS

SCALE: 1"=50' | SHEET OF SHEETS | STA. TO STA.

F.A.P. RTE.	SECTION	COUNTY	TOTAL SHEETS	SHEET NO.
317A	(15B-1)BP, BRR:(14HB-1)BRR	PEORIA/TAZWELL	418	87
		CONTRACT NO. 68E44		
	ILLINOIS	FED. AID PROJECT		

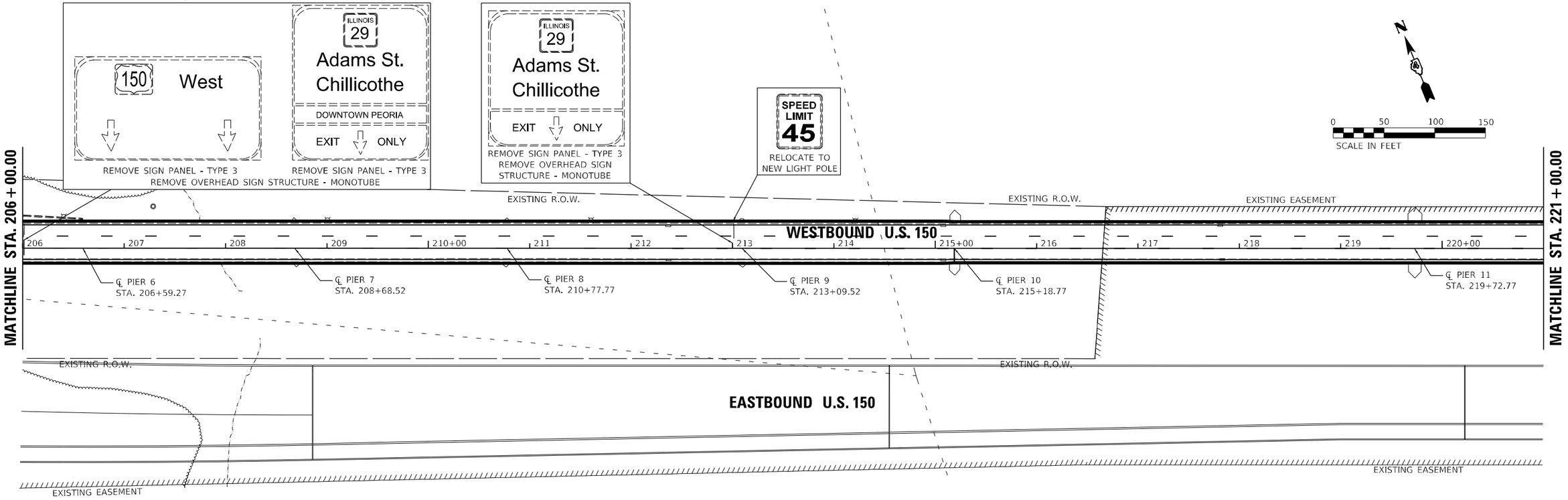

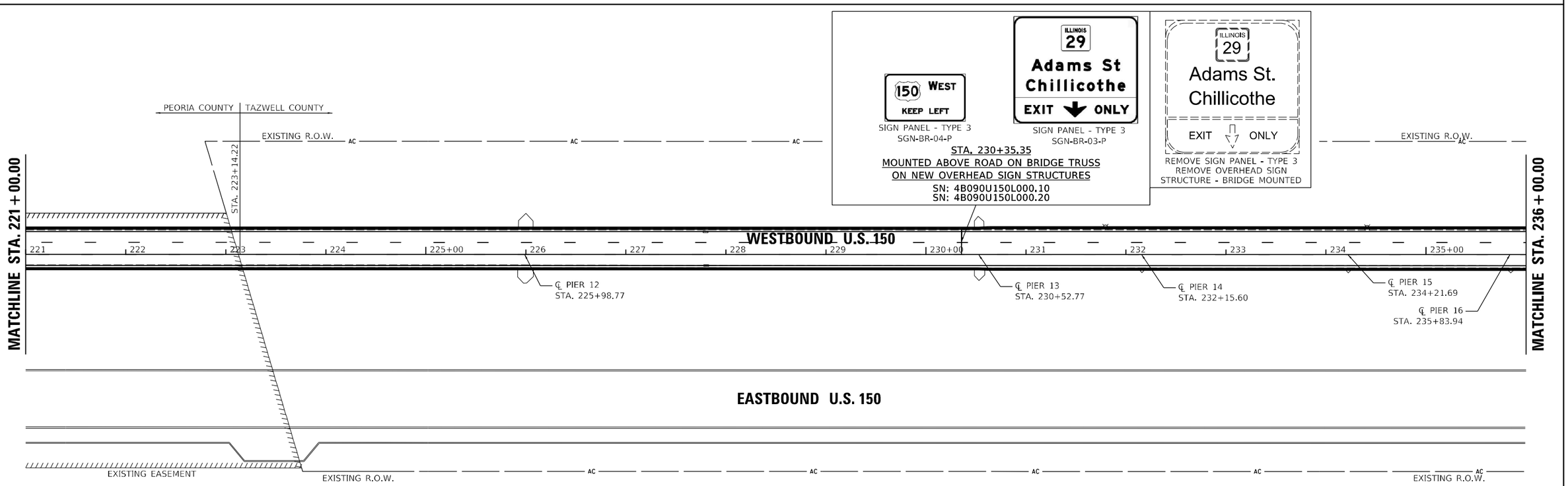

HANSON
Hanson Professional Services Inc.

LAYOUT	RLA	10/31/2023
DRAWN	CM/RLA	1/13/2025
REVIEWED	MGD	1/14/2025

MODEL: Default
FILE NAME: I:\20Jobs\20H0949\CAD\CAD_Sheets\Sh-pave02.dgn

USER NAME = Ander00846	DESIGNED - RLA	REVISED -	STATE OF ILLINOIS DEPARTMENT OF TRANSPORTATION
	DRAWN - CM/RLA	REVISED -	
PLOT SCALE = 100.00 ' / in.	CHECKED - MGD	REVISED -	
PLOT DATE = 2/13/2025	DATE - 1/14/2025	REVISED -	

WESTBOUND US 150 McCLUGAGE BRIDGE
SIGNING PLANS

SCALE: 1"=50' | SHEET OF SHEETS | STA. TO STA.

F.A.P. RTE.	SECTION	COUNTY	TOTAL SHEETS	SHEET NO.
317A	(15B-1)BP, BRR:(14HB-1)BRR	PEORIA/TAZWELL	418	88

CONTRACT NO. 68E44

ILLINOIS | FED. AID PROJECT

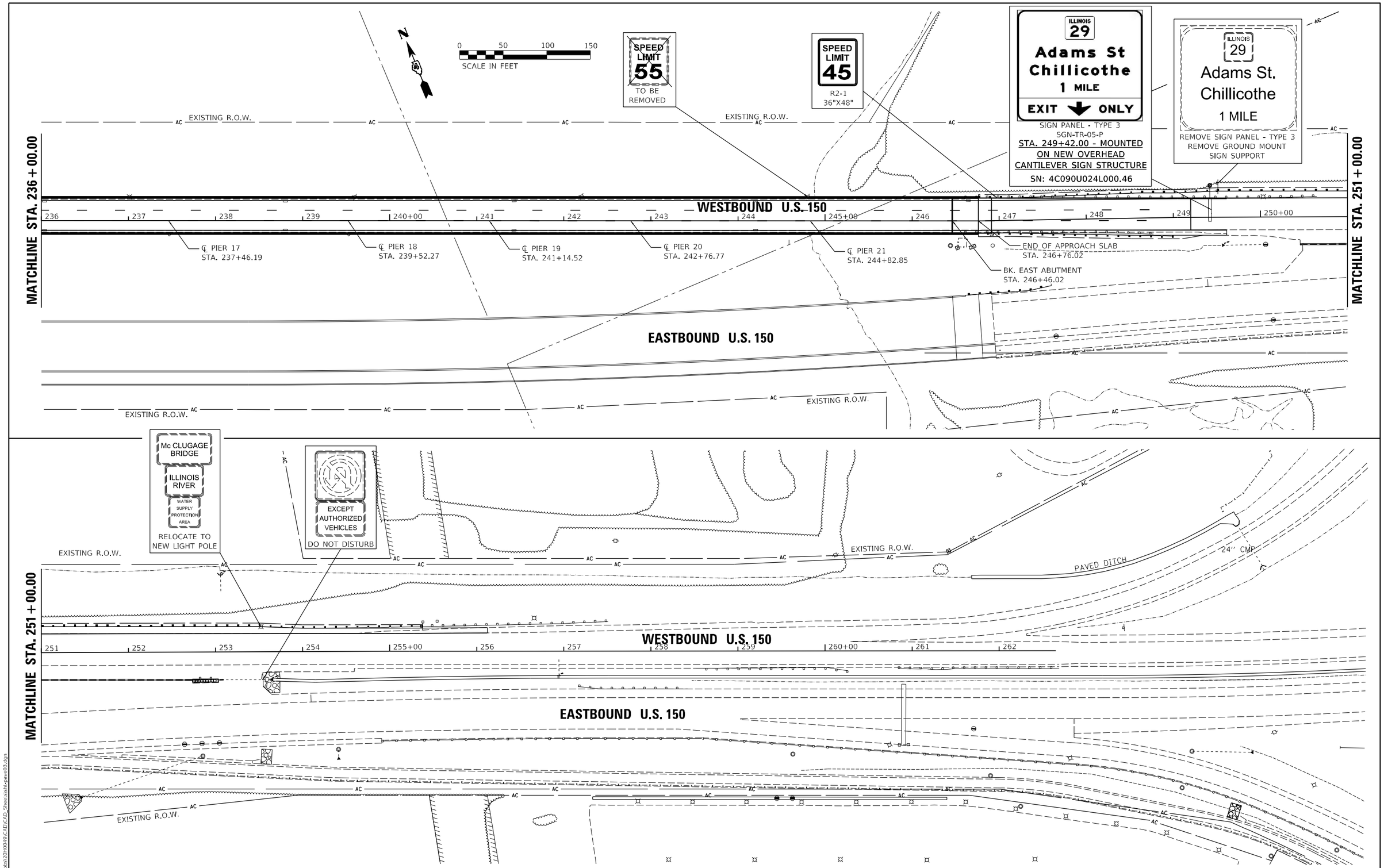

HANSON
Hanson Professional Services Inc.

LAYOUT	RLA	10/31/2023
DRAWN	CM/RLA	1/13/2025
REVIEWED	MGD	1/14/2025

MODEL: Default
FILE NAME: I:\20jobs\20H0049\CAD\CAD_Sheets\sh-pave03.dgn

USER NAME = Ander00846	DESIGNED - RLA	REVISED -	STATE OF ILLINOIS DEPARTMENT OF TRANSPORTATION	WESTBOUND US 150 McCLUGAGE BRIDGE SIGNING PLANS	
	DRAWN - CM/RLA	REVISED -			
PLOT SCALE = 100.00 ' / in.	CHECKED - MGD	REVISED -			
PLOT DATE = 2/13/2025	DATE - 1/14/2025	REVISED -		SCALE: 1"=50' SHEET OF SHEETS STA. TO STA.	

F.A.P. RTE.	SECTION	COUNTY	TOTAL SHEETS	SHEET NO.
317A	(15B-1)BP, BRR:(14HB-1)BRR	PEORIA/TAZWELL	418	89
		CONTRACT NO. 68E44		
		ILLINOIS FED. AID PROJECT		

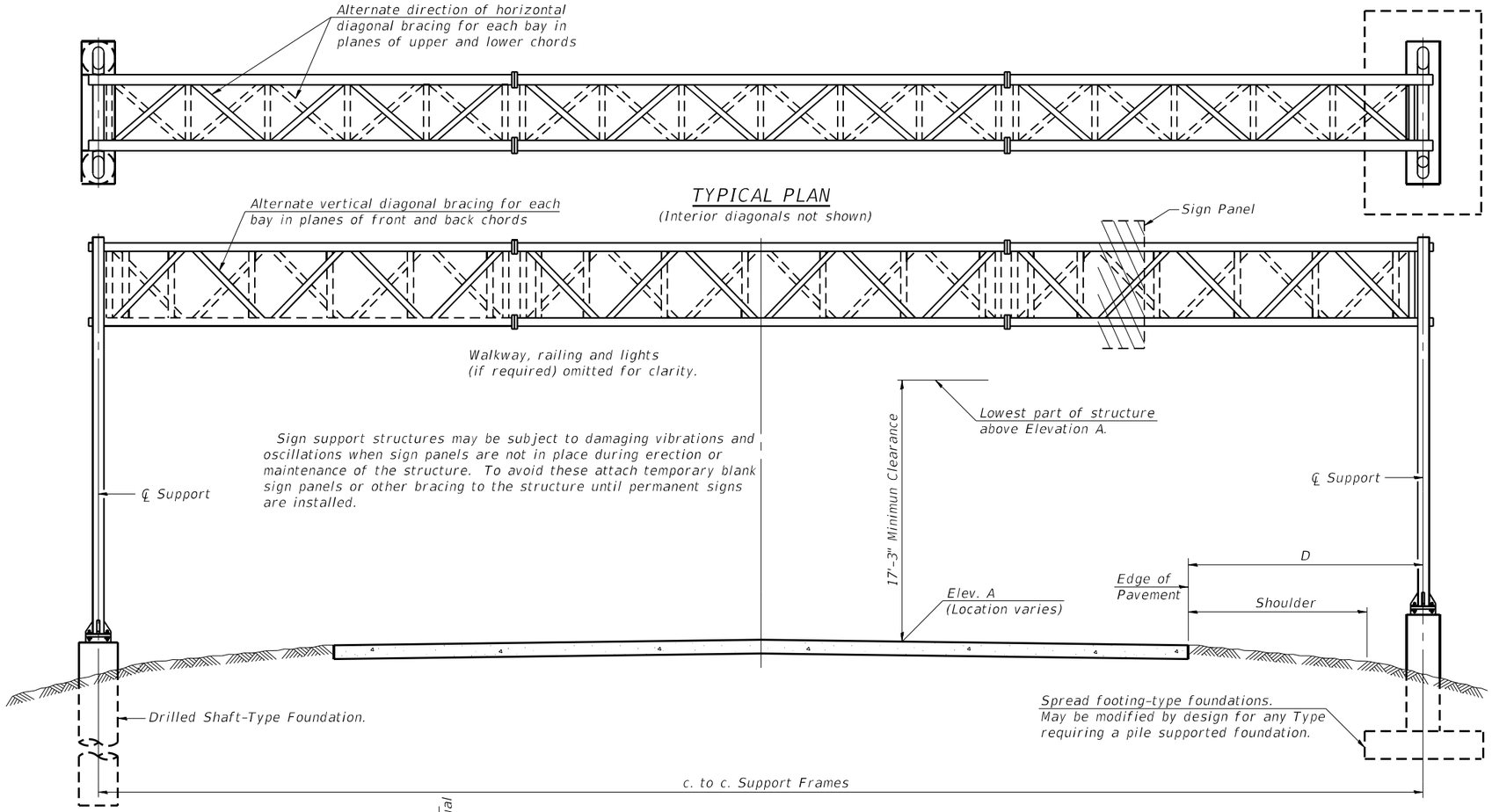

TYPICAL PLAN

(Interior diagonals not shown)

TYPICAL ELEVATION

(Looking at Face of Signs**)

Elev. A = Elevation at point of minimum clearance to sign, walkway support or truss.

Structure Number	Station	Design Truss Type	c. to c. Supports	Elev. A	Dim. D	Height of Tallest Sign	Total Sign Area
4S072U150L029.01	STA. 201+42.23	I-A	50'-5"	499.68	10'-0 7/8"	14'-6"	346.25ft²

**Looking upstation for structures with signs both sides.

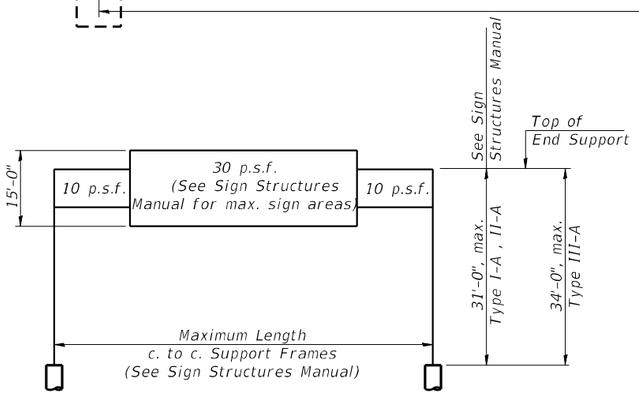

DESIGN WIND LOADING DIAGRAM

Parameters shown are basis for I.D.O.T. Standards and Sign Manual Tables. Installations not within dimensional limits shown require special analysis for all components.

GENERAL NOTES

DESIGN: AASHTO Standard Specifications for Structural Supports for Highway Signs, Luminaires and Traffic Signals. ("AASHTO Specifications")

CONSTRUCTION: Current (at time of letting) Illinois Department of Transportation Standard Specifications for Road and Bridge Construction, Supplemental Specifications and Special Provisions. ("Standard Specifications")

LOADING: 90 M.P.H. WIND VELOCITY

WALKWAY LOADING: Dead load plus 500 lbs. concentrated live load.

DESIGN STRESSES:
Field Units
f'c = 3,500 p.s.i.
fy = 60,000 p.s.i. (reinforcement)

WELDING: All welds to be continuous unless otherwise shown. All welding to be done in accordance with current AWS D1.1 and D1.2 Structural Welding Codes (Steel and Aluminum) and the Standard Specificiations.

MATERIALS: Aluminum Alloys as shown throughout plans. All Structural Steel Pipe shall be ASTM A53 Grade B or A500 Grade B or C. If A500 pipe is substituted for A53, then the outside diameter shall be as detailed and wall thickness greater than or equal to A53. All Structural Steel Plates and Shapes shall conform to AASHTO M270 Gr. 36, Gr. 50 or Gr. 50W*. Stainless steel for shims, sleeves and handhole covers shall be ASTM A240, Type 302 or 304, or another alloy suitable for exterior exposure and acceptable to the Engineer.
The steel pipe and stiffening ribs at the base plate for the column shall have a minimum longitudinal Charpy V-Notch (CVN) energy of 15 lb.-ft. at 40° F. (Zone 2) before galvanizing.

FASTENERS FOR ALUMINUM TRUSSES: All bolts noted as "high strength" must satisfy the requirements of AASHTO M164 (ASTM A325), or approved alternate, and must have matching lock nuts. Threaded studs for splices (if Members interfere) must satisfy the requirements of ASTM A449, ASTM A193, Grade B7, or approved alternate, and must have matching lock nuts. Bolts and lock nuts not required to be high strength must satisfy the requirements of ASTM A307. All bolts and lock nuts must be hot dip galvanized per AASHTO M232. The lock nuts must have nylon or steel inserts. A stainless steel flat washer conforming to ASTM A240 Type 302 or 304, is required under both head and nut or under both nuts where threaded studs are used. High strength bolt installation shall conform to Article 505.04 (f) (2)d of the IDOT Standard Specifications for Road and Bridge Construction. Rotational capacity ("ROCAP") testing of bolts will not be required.

U-BOLTS AND EYEBOLTS: U-Bolts and Eyebolts must be produced from ASTM A276 Type 304, 304L, 316 or 316L, Condition A, cold finished stainless steel, or an equivalent material acceptable to the Engineer. All nuts for U-Bolts and Eyebolts must be lock nuts equivalent to ASTM A307 with nylon or steel inserts and hot dip galvanized per AASHTO M232. A stainless steel flat washer conforming to ASTM A240, Type 302 or 304, is required under each U-Bolt and Eyebolt lock nut.

GALVANIZING: All Steel Grating, Plates, Shapes and Pipe shall be Hot Dip Galvanized after fabrication in accordance with AASHTO M111. Painting is not permitted.

ANCHOR RODS: Shall conform to ASTM F1554 Gr. 105.

CONCRETE SURFACES: All concrete surfaces above an elevation 6" below the lowest final ground line at each foundation shall be cleaned and coated with Concrete Sealer in accordance with the Standard Specifications.

REINFORCEMENT BARS: Reinforcement Bars designated (E) shall be epoxy coated in accordance with the Standard Specifications.

FOUNDATIONS: The contract unit price for Concrete Foundations and Drilled Shaft Concrete Foundations shall include reinforcement bars complete in place.

* If M270 Gr. 50W (M222) steel is proposed, chemistry for plate to be used shall first be approved by the Engineer as suitable for galvanizing and welding.

TOTAL BILL OF MATERIAL

Item	Unit	Total
OVERHEAD SIGN STRUCTURE - SPAN, TYPE I-A (4'-0" X 4'-6")	Foot	50.4

OS-A-1 5-5-2023

MODJESKI and MASTERS

USER NAME = AECook	DESIGNED - UB	REVISED -	
	DRAWN - ELK	REVISED -	
PLOT SCALE = 0:2.0000 ':' / in.	CHECKED - UB	REVISED -	
PLOT DATE = 1/20/2025	DATE - 1/20/2025	REVISED -	

STATE OF ILLINOIS
DEPARTMENT OF TRANSPORTATION

OVERHEAD SIGN STRUCTURES - GENERAL PLAN & ELEVATION - ALUMINUM TRUSS & STEEL SUPPORTS

SCALE: N.T.S. | SHEET 1 OF 8 SHEETS | STA. 201+38.73 TO STA. 201+45.73

F.A.P RTE.	SECTION	COUNTY	TOTAL SHEETS	SHEET NO.
317	(15B-1)BP,BRR; (14HB-1)BRR	PEO/TAZ	418	90

CONTRACT NO. 68E44

ILLINOIS FED. AID PROJECT

MODEL: Default
FILE NAME: P:\4312-VBM\CLingeRehab\CADD\Structural_Roadway (MM)\D468E44-sh-SignAlumTrss1.dgn
1/20/2025 7:33:30 AM

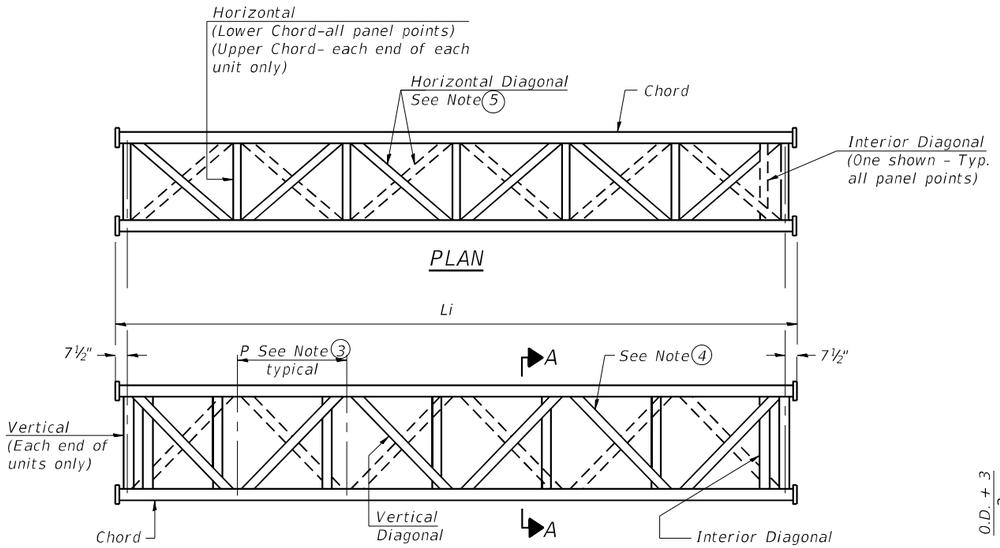

ELEVATION
TYPICAL INTERIOR UNIT
Even number of panels/interior unit required.

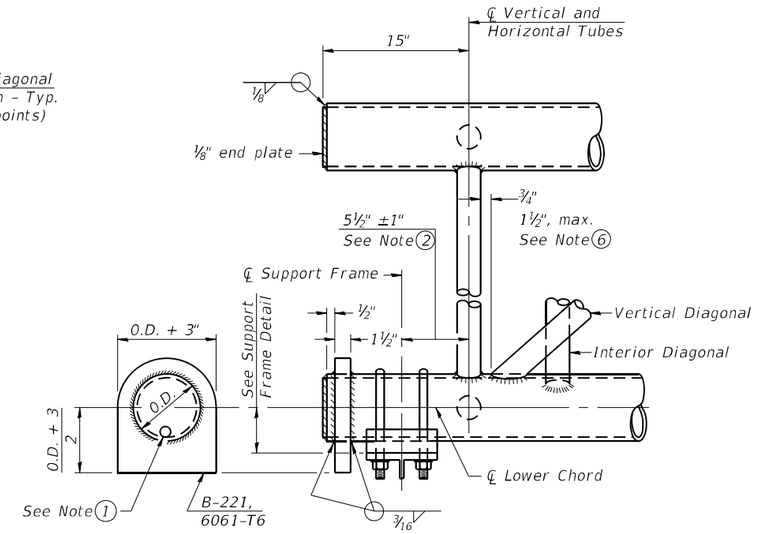

SUPPORT END DETAIL FOR EXTERIOR UNIT

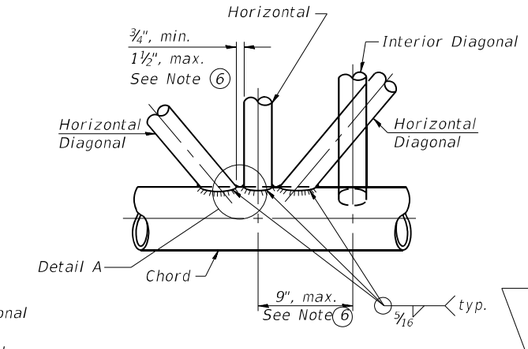

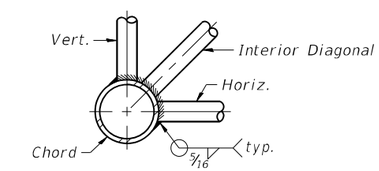

TYPICAL JOINT DETAILS

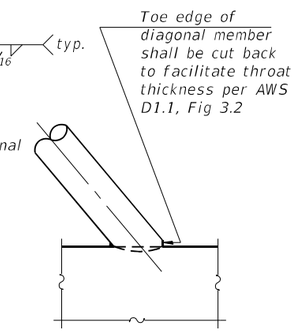

DETAIL A

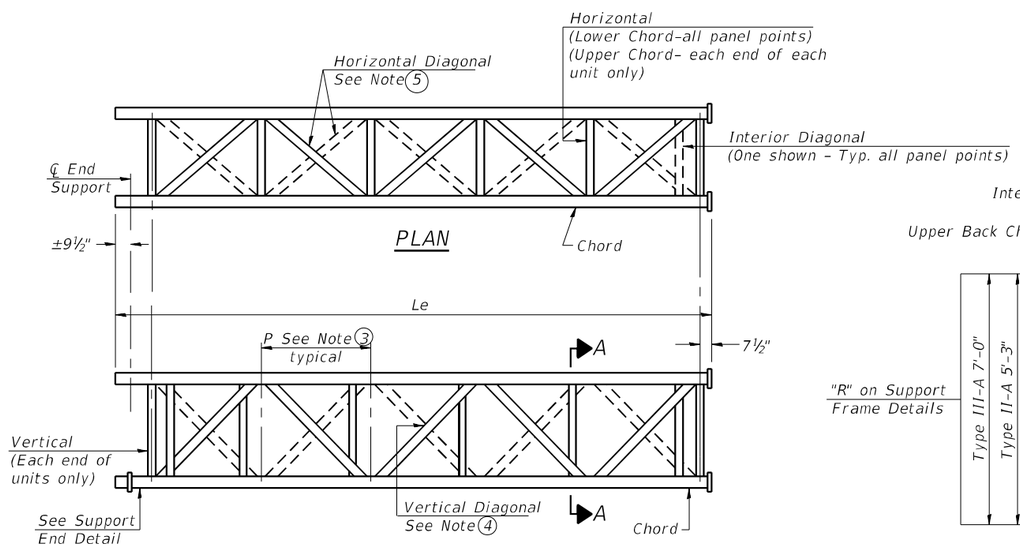

ELEVATION
TYPICAL EXTERIOR UNIT
Even or odd number of panels/exterior units allowed.

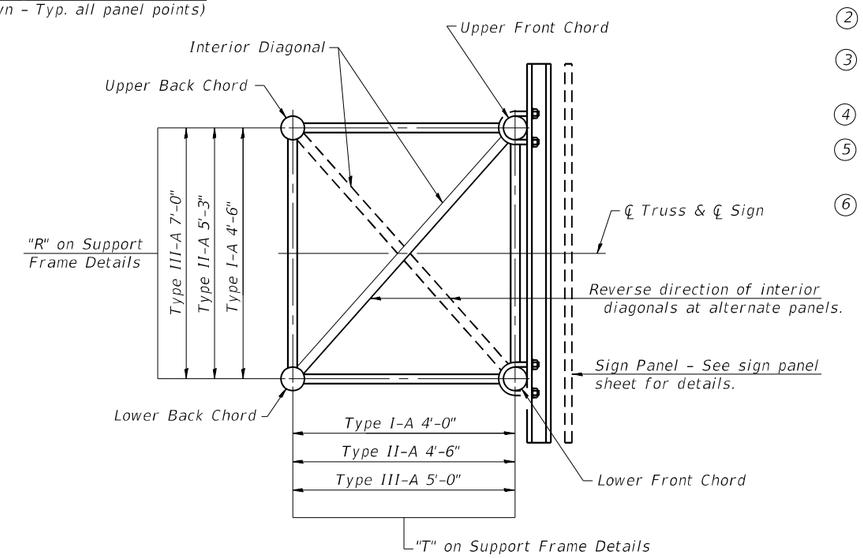

SECTION A-A

1. Contractor may alternatively use standard aluminum drive-fit cap to close end. ½" Ø drain hole in end plate/drive-fit cap. (Typ. at ends of all chords)
2. 5½" end dimension may vary by ±1" to provide uniform panel spacing (P).
3. Panel spacing (P) shall be uniform for entire truss and between 4'-0" and 5'-0" for Type I-A or 4'-0" and 5'-6" for Types II-A and III-A.
4. Vertical Diagonals in front and back face shall alternate.
5. Hidden lines show wind bracing alternates direction between planes of top and bottom chords.
6. All diagonals shall be detailed for minimum offset from the panel point based on the following: Offset shall be such as to provide a ¾" minimum to 1½" maximum clearance between any diagonal and any horizontal or vertical member, and to provide clearance for U-bolt connections of signs or walkway brackets.

OS-A-2 5-5-2023

MODEL: Default
FILE NAME: P:\4312-WBK-CLingageRehab\CADD\Structural_Roadway (MM)\D468E44-sht-Sign4LumTrss2.dgn

MODJESKI and MASTERS

USER NAME = AECook	DESIGNED - UB	REVISED -	
	DRAWN - ELK	REVISED -	
PLOT SCALE = 0:2.0000 ':' / in.	CHECKED - UB	REVISED -	
PLOT DATE = 1/20/2025	DATE - 1/20/2025	REVISED -	

STATE OF ILLINOIS
DEPARTMENT OF TRANSPORTATION

OVERHEAD SIGN STRUCTURES - ALUMINUM TRUSS
DETAILS FOR TRUSS TYPES I-A,II-A, AND III-A

SCALE: N.T.S. | SHEET 2 OF 8 SHEETS | STA. 201+38.73 TO STA. 201+45.73

F.A.P RTE.	SECTION	COUNTY	TOTAL SHEETS	SHEET NO.
317	(15B-1)BP,BRR; (14HB-1)BRR	PEO/TAZ	418	91
		CONTRACT NO. 68E44		
		ILLINOIS FED. AID PROJECT		

1/20/2025 7:33:39 AM

TRUSS UNIT TABLE

Structure Number	Station	Design Truss Type	Exterior Units (2)			Interior Unit				Upper & Lower Chord		Verticals; Horizontals; Vertical, Horizontal, and Interior Diagonals		Camber at Midspan	Splicing Flange					
			No. Panels per Unit	Unit Lgth.(Le)	Panel Lgth.(P)	No. Req'd.	No. Panels per Unit	Unit Lgth.(Li)	Panel Lgth.(P)	O.D.	Wall	O.D.	Wall		Bolts		Weld Sizes		A	B
															No./Splice	Dia.	W	W1		
4S072U150L029.01	STA. 201+42.23	I-A	6	26'-0"	4'-¼"	-	-	-	-	4½"	¼"	2¼"	¼"	⅝"	6	¾"	¼"	3/16"	8¼"	11¼"

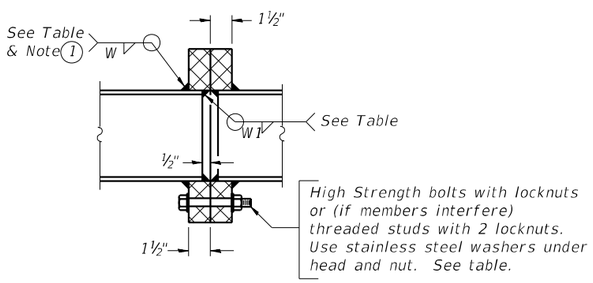

SECTION B-B

1 Splicing Flanges shall be attached to each truss unit with the truss shop assembled to camber shown. Truss units shall be in proper alignment and flange surfaces shall be shop bolted into full contact before welding. Sufficient external welds or tacks shall be made to secure flanges until remaining welds are made after disassembly. Adjacent flanges shall be "match marked" to insure proper field assembly.

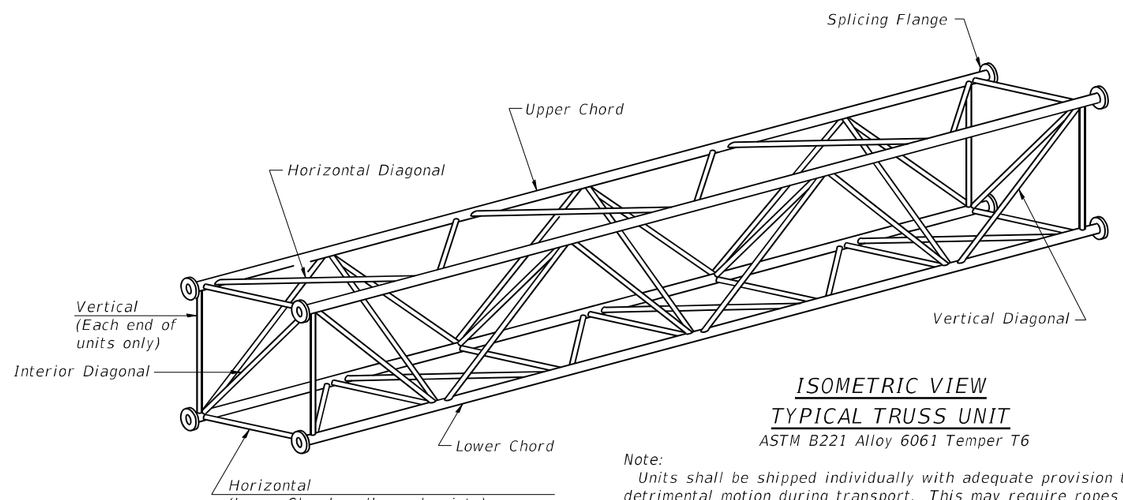

ISOMETRIC VIEW
TYPICAL TRUSS UNIT
ASTM B221 Alloy 6061 Temper T6

Note:
Units shall be shipped individually with adequate provision to prevent detrimental motion during transport. This may require ropes between horizontals and diagonals or energy dissipating (elastic) ties to the vehicle. The Contractor is responsible for maintaining the configuration and protection of the units.

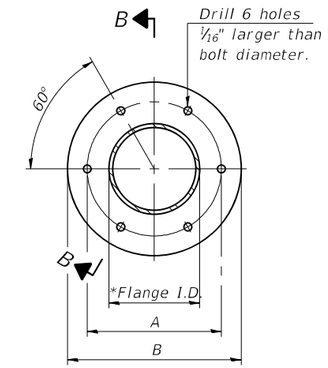

TRUSS TYPES I-A, II-A, & III-A

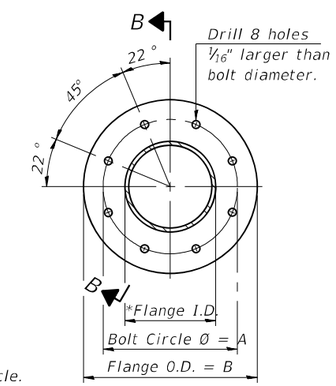

TRUSS TYPES II-A & III-A

SPLICING FLANGES

ASTM B221, Alloy 6061-T6
or ASTM B209, Alloy 6061-T651
*To fit O.D. of Chord with maximum gap of 1/16".

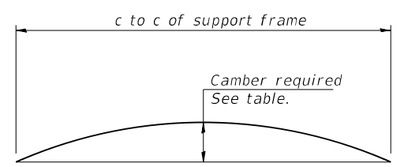

CAMBER DIAGRAM

Camber curve shown is theoretical. Actual camber attained by slope changes at splices between units.

CAMBER ATTAINMENT EXAMPLES:

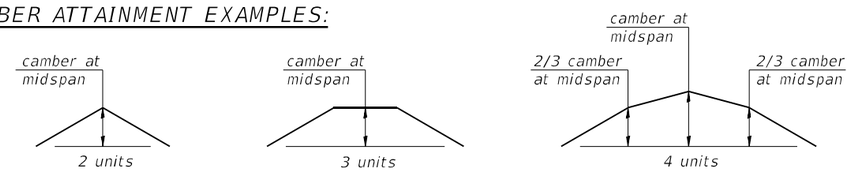

Camber shown is for fabrication only, measured with truss fully supported. (No-load condition)

0S4-A-2 5-5-2023

MODEL: Default
FILE NAME: P:\d312-WBM\CLigageRehab\CADD\Structural_Roadway (MM)\D468E44-sh-SignAlumTrss3.dgn

MODJESKI and MASTERS	USER NAME = AECook	DESIGNED - UB	REVISED -
		DRAWN - ELK	REVISED -
	PLOT SCALE = 0:2.0000 ':" / in.	CHECKED - UB	REVISED -
	PLOT DATE = 1/20/2025	DATE - 1/20/2025	REVISED -

STATE OF ILLINOIS
DEPARTMENT OF TRANSPORTATION

OVERHEAD SIGN STRUCTURES - ALUMINUM TRUSS
DETAILS FOR TRUSS TYPES I-A,II-A, AND III-A

SCALE: N.T.S. | SHEET 3 OF 8 SHEETS | STA. 201+38.73 TO STA. 201+45.73

F.A.P RTE.	SECTION	COUNTY	TOTAL SHEETS	SHEET NO.
317	(15B-1)BP,BRR; (14HB-1)BRR	PEO/TAZ	418	92

CONTRACT NO. 68E44
ILLINOIS | FED. AID PROJECT

1/20/2025 7:33:45 AM

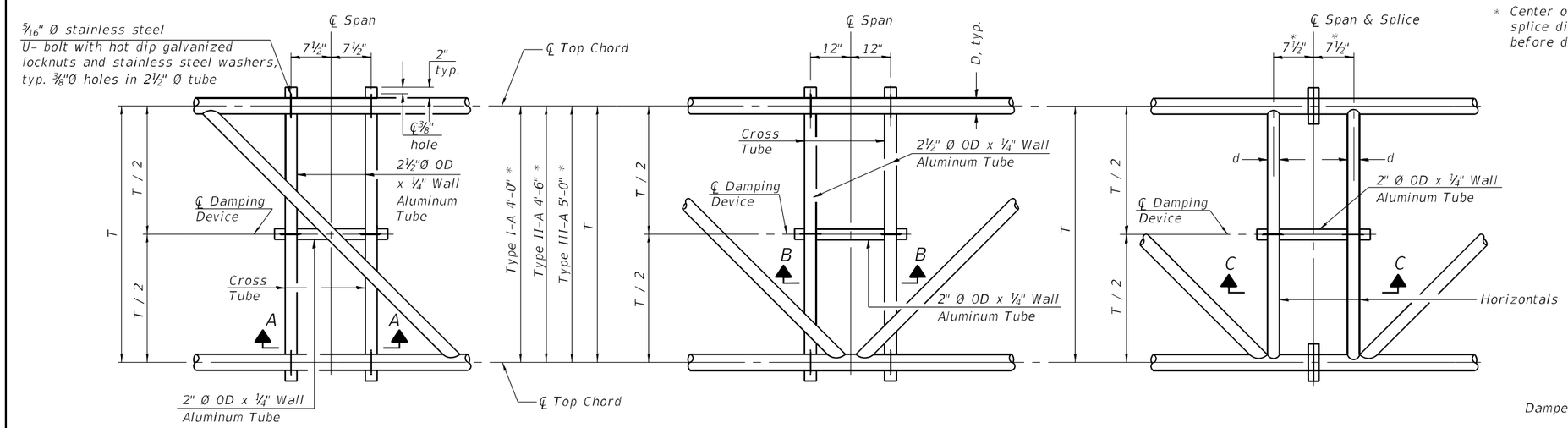

* Center of horizontal to center of splice dimension may vary. Verify before drilling holes in mounting tube.

PLAN DETAIL "A"
℄ Span between Panel Points

PLAN DETAIL "B"
℄ Span at Panel Point

PLAN DETAIL "C"
℄ Span at ℄ Chord Splice

NOTES

Damper: One damper per truss. (31 lbs. minimum Stockbridge-Type Aluminum - 29" minimum between ends of weights) Cost included in Overhead Sign Structure...

Materials: Materials: Aluminum tubes shall be ASTM B221 alloy 6061 temper T6. Cost included in Overhead Sign Structure...

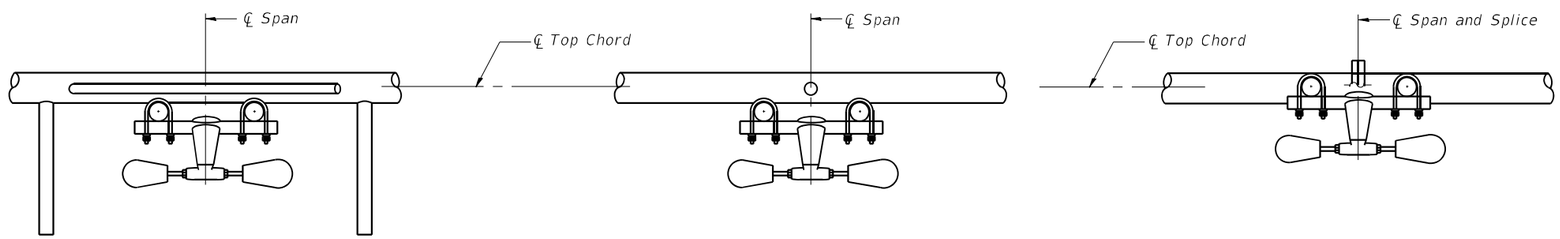

SECTION A-A

SECTION B-B

SECTION C-C

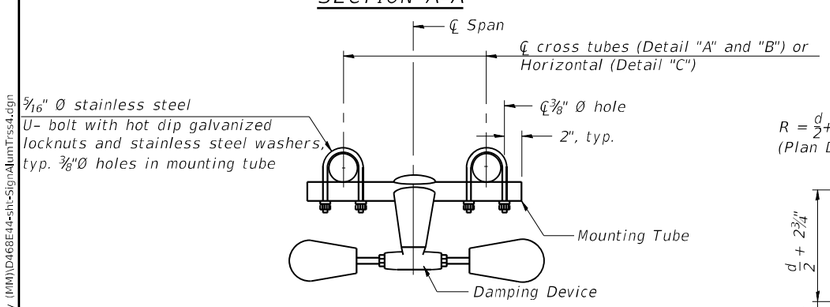

TRUSS DAMPING
DEVICE CONNECTION DETAIL
(Typical)

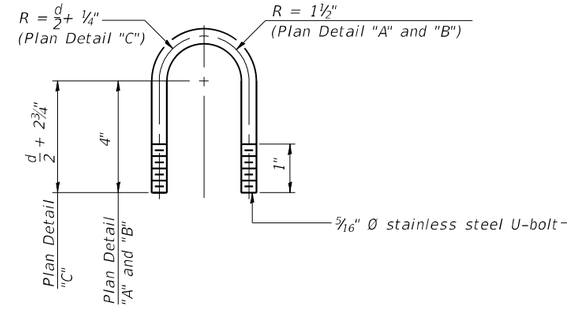

DAMPING DEVICE MOUNTING
TUBE U-BOLT DETAIL
(Typical)

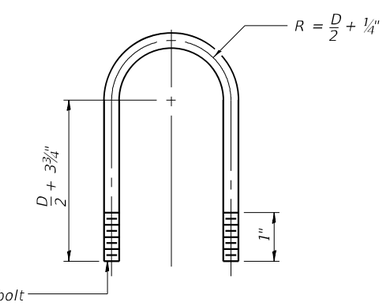

TOP CHORD TO CROSS TUBE
U-BOLT DETAIL
(Typical - Detail "A" and "B")

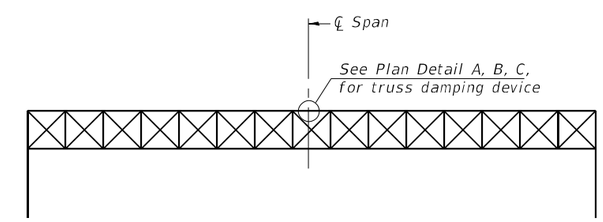

ELEVATION
Aluminum Overhead
Sign Truss

OS-A-D 5-5-2023

MODEL: Default
FILE NAME: P:\4312-VBR\C1LuggeRehab\CADD\Structural_Roadway (MM)\D468E44-sht-SignAlumTrss4.dgn

MODJESKI-MASTERS	USER NAME = AECook	DESIGNED - UB	REVISED -
		DRAWN - ELK	REVISED -
	PLOT SCALE = 0:2.0000 ':" / in.	CHECKED - UB	REVISED -
	PLOT DATE = 1/20/2025	DATE - 1/20/2025	REVISED -

STATE OF ILLINOIS
DEPARTMENT OF TRANSPORTATION

OVERHEAD SIGN STRUCTURE
DAMPING DEVICE

SCALE: N.T.S. | SHEET 4 OF 8 SHEETS | STA. 201+38.73 | TO STA. 201+45.73

F.A.P RTE.	SECTION	COUNTY	TOTAL SHEETS	SHEET NO.
317	(15B-1)BP,BRR; (14HB-1)BRR	PEO/TAZ	418	93
		CONTRACT NO. 68E44		
		ILLINOIS FED. AID PROJECT		

1/20/2025 7:33:52 AM

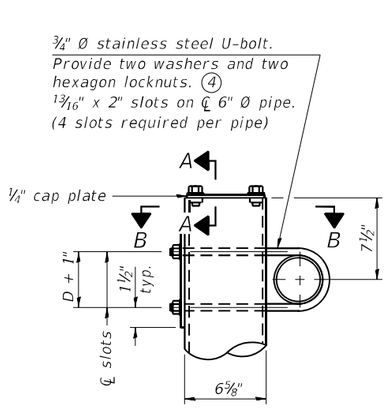

DETAIL A

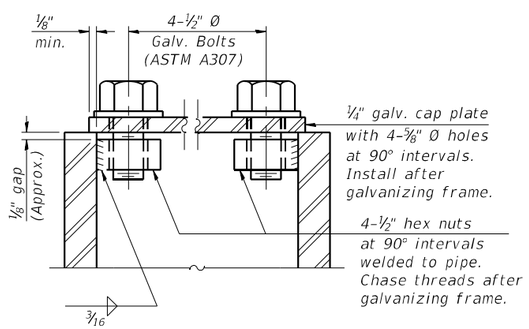

SECTION A-A

As an alternate to bolts, may use galvanized drive-fit caps installed after galvanizing frame.

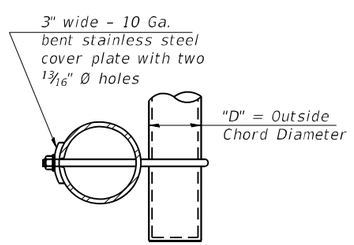

SECTION B-B

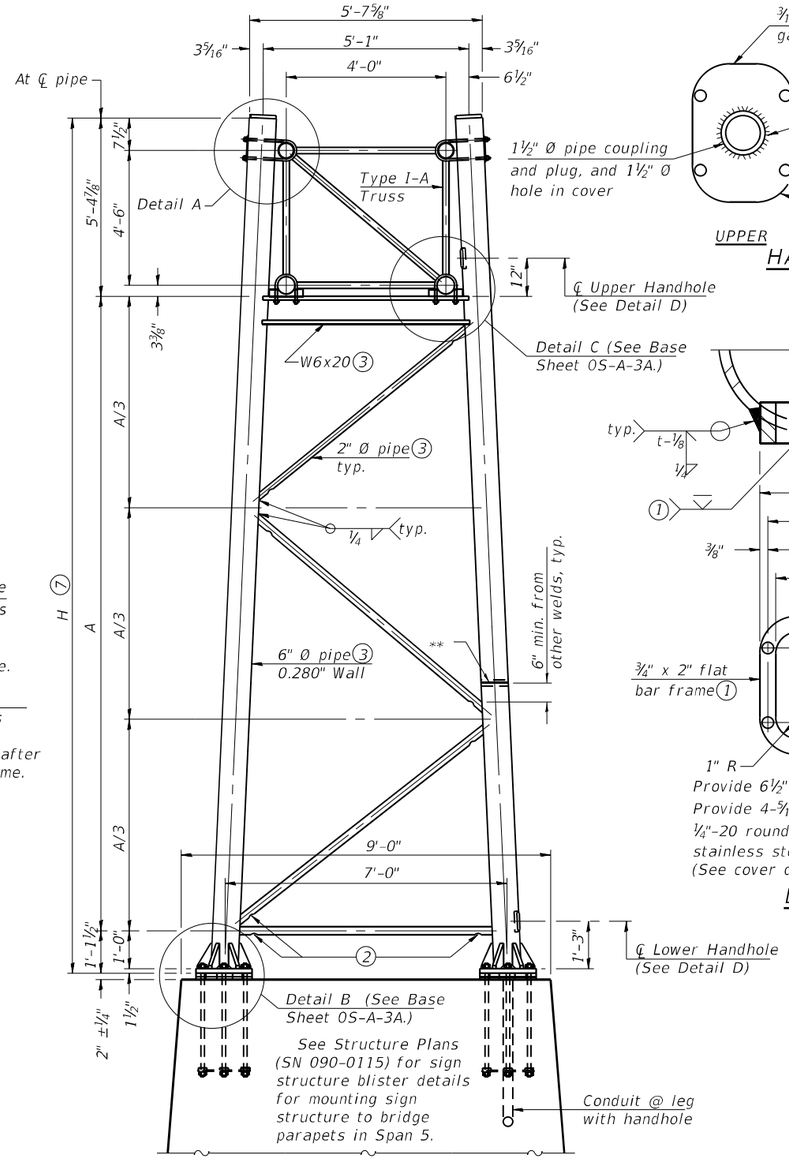

SIDE ELEVATION

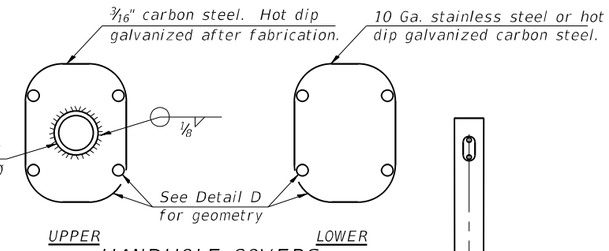

HANDHOLE COVERS

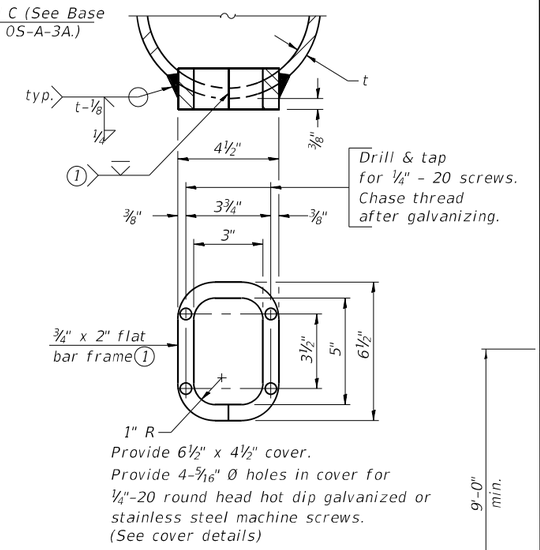

DETAIL D

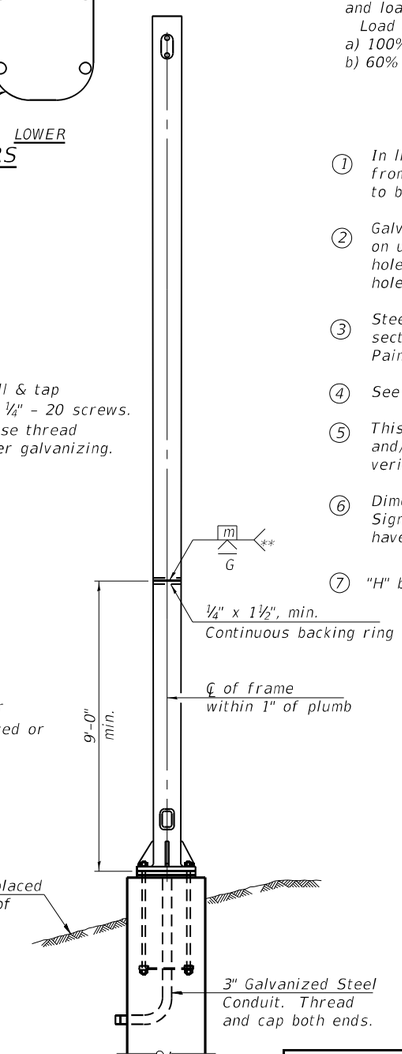

END ELEVATION

Support Design Loads: See Base Sheet OS-A-1 for design and loading criteria.

Load combinations checked include deadload plus:

a) 100% wind normal to sign, 20% parallel to sign

b) 60% wind normal to sign, 30% parallel to sign

(1) In lieu of fabricated handhole frame as shown, may cut from 2" plate (rolling direction vertical). All cut faces to be ground to ANSI Roughness of 500μ in or less.

(2) Galvanizing vent holes of adequate size shall be provided on underside at each end of bracing pipes. Alternately, holes may be provided in wall of pipe column. All vent holes shall be drilled and de-burred, typ.

(3) Steel pipe, plate, carbon steel handhole covers and rolled sections shall be hot dip galvanized after fabrication. Painting is not permitted. See Base Sheet OS-A-1.

(4) See General Notes for fasteners.

(5) This standard may be utilized for special short-span and/or short end support applications subject to verification of maximum loads and capacities by the designer.

(6) Dimensions shown are based on selection criteria in the Sign Structures Manual. Nonstandard applications must have dimensions verified or amended as appropriate.

(7) "H" based on 15'-0" or actual sign height, whichever is greater.

Structure Number	Station	Support Left	Support Right	H (7)	A
4S072U150L029.01	STA. 201+42.23	✓	✓	25'-0"	18'-5⅝"

6" Ø PIPE TRUSS SUPPORT DETAILS

** One butt welded joint is allowed only on one post per support frame. If used, weld procedure must be pre-approved by Engineer and joint shall receive 100% RT or UT (tension criteria) at Contractor's expense.

OS-A-3 5-5-2023

MODEL: Default
FILE NAME: P:\4312-WBMcCluggageRehab\CADD\Structural_Roadway (MM)\D468E44-sh-Sign-AlumTruss5.dgn

MODJESKI and MASTERS

USER NAME = AECook	DESIGNED - UB	REVISED -
	DRAWN - ELK	REVISED -
PLOT SCALE = 0:2.0000 ':" / in.	CHECKED - UB	REVISED -
PLOT DATE = 1/20/2025	DATE - 1/20/2025	REVISED -

STATE OF ILLINOIS
DEPARTMENT OF TRANSPORTATION

OVERHEAD SIGN STRUCTURES
SUPPORT FRAME FOR TYPE I-A ALUMINUM TRUSS

SCALE: N.T.S. | SHEET 5 OF 8 SHEETS | STA. 201+38.73 TO STA. 201+45.73

F.A.P RTE.	SECTION	COUNTY	TOTAL SHEETS	SHEET NO.
317	(15B-1)BP,BRR; (14HB-1)BRR	PEO/TAZ	418	94

CONTRACT NO. 68E44

ILLINOIS FED. AID PROJECT

1/20/2025 7:33:57 AM

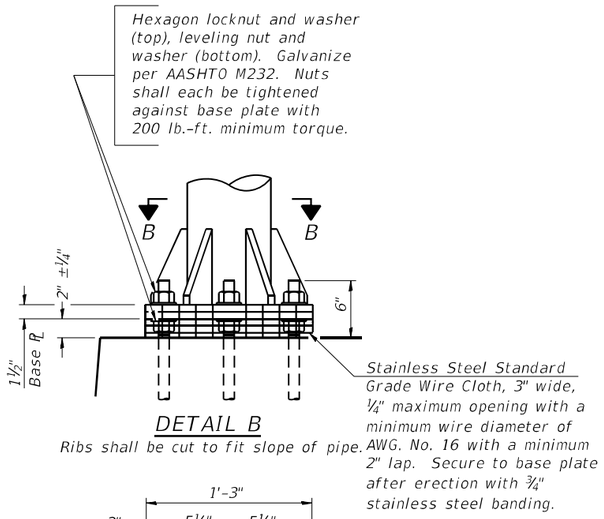

DETAIL B

Ribs shall be cut to fit slope of pipe.

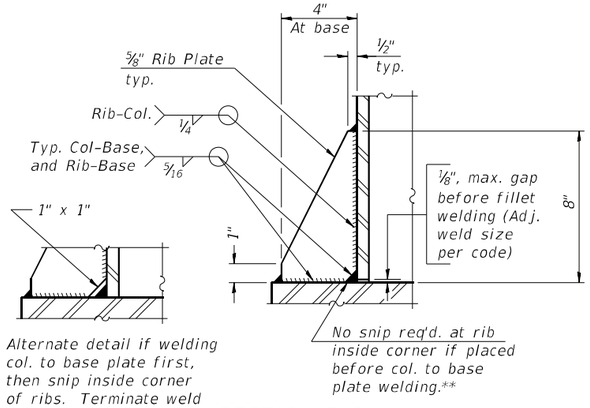

SECTION D-D

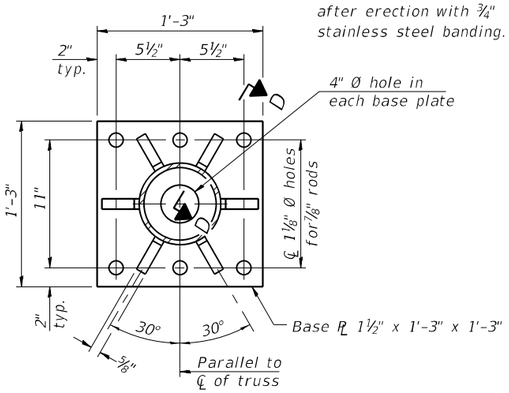

SECTION B-B

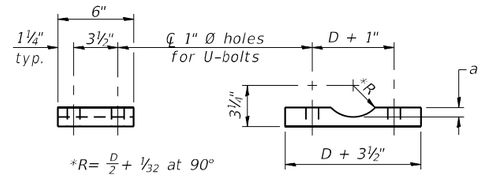

*R= $\frac{D}{2}$ + 1/32 at 90°

D = Outside Diameter of Chord.

SADDLE SHIM DETAIL

ASTM B26 Alloy 356-F

or

ASTM B209 Alloy 6061-T651

(4 required per sign truss)

Truss Chord Nominal Dia.	a
4½"	11/16"
5"	¾"
5½"	13/16"

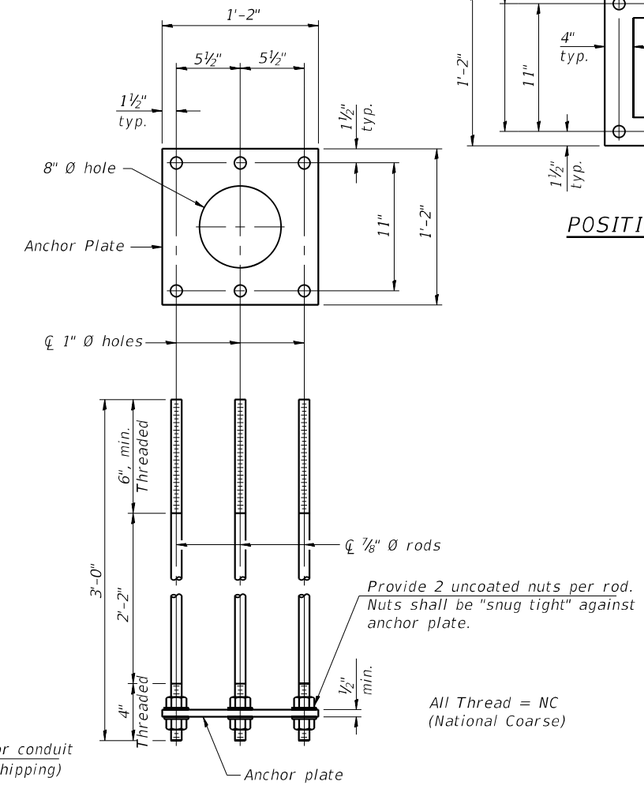

All Thread = NC
(National Coarse)

ANCHOR ROD DETAIL

Spread Footing Foundation

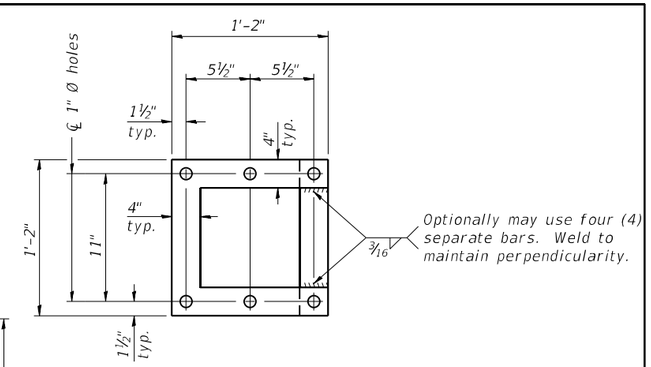

POSITIONING PLATE(S)

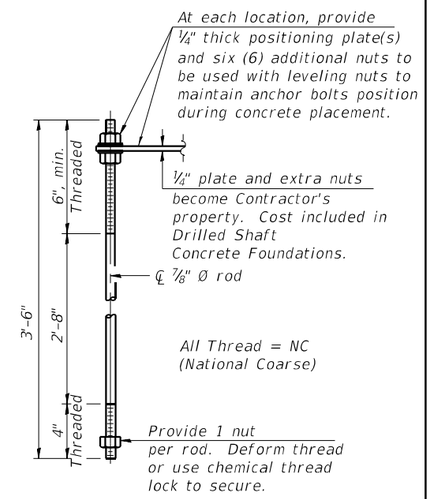

ANCHOR ROD DETAIL

Drilled Shaft Foundation

Anchor rods shall conform to ASTM F1554 Grade 105. Galvanize upper 12" minimum per AASHTO M232. No welding shall be permitted on rods.

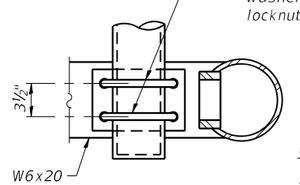

SECTION C-C

(Handhole cover not shown)

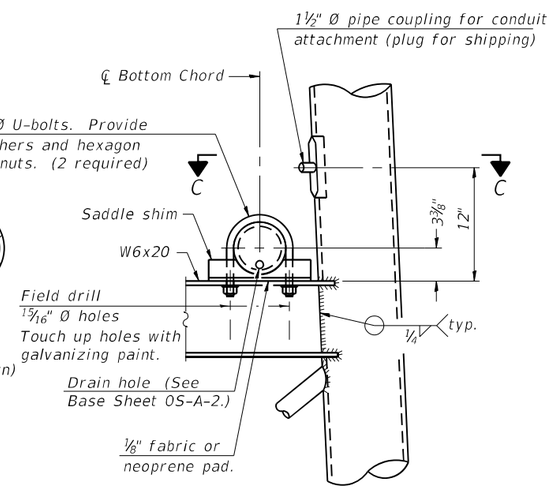

DETAIL C

TYPE I-A TRUSS

6" Ø PIPE SUPPORT FRAME DETAILS

OS-A-3A 5-5-2023

USER NAME = AECook	DESIGNED - UB	REVISED -	
	DRAWN - ELK	REVISED -	
PLOT SCALE = 0:2.0000 ':" / in.	CHECKED - UB	REVISED -	
PLOT DATE = 1/20/2025	DATE - 1/20/2025	REVISED -	

MODJESKI and MASTERS

STATE OF ILLINOIS
DEPARTMENT OF TRANSPORTATION

OVERHEAD SIGN STRUCTURES
SUPPORT FRAME FOR ALUMINUM TRUSS

SCALE: N.T.S. | SHEET 6 OF 8 SHEETS | STA. 201+38.73 TO STA. 201+45.73

F.A.P RTE.	SECTION	COUNTY	TOTAL SHEETS	SHEET NO.
317	(15B-1)BP,BRR; (14HB-1)BRR	PEO/TAZ	418	95

CONTRACT NO. 68E44

ILLINOIS | FED. AID PROJECT

MODEL: Default
FILE NAME: P:\4312-WBK\CLigageRehab\CADD\Structural_Roadway (MM)\D468E44-sht-Sign4lumTrss6.dgn

1/20/2025 7:34:05 AM

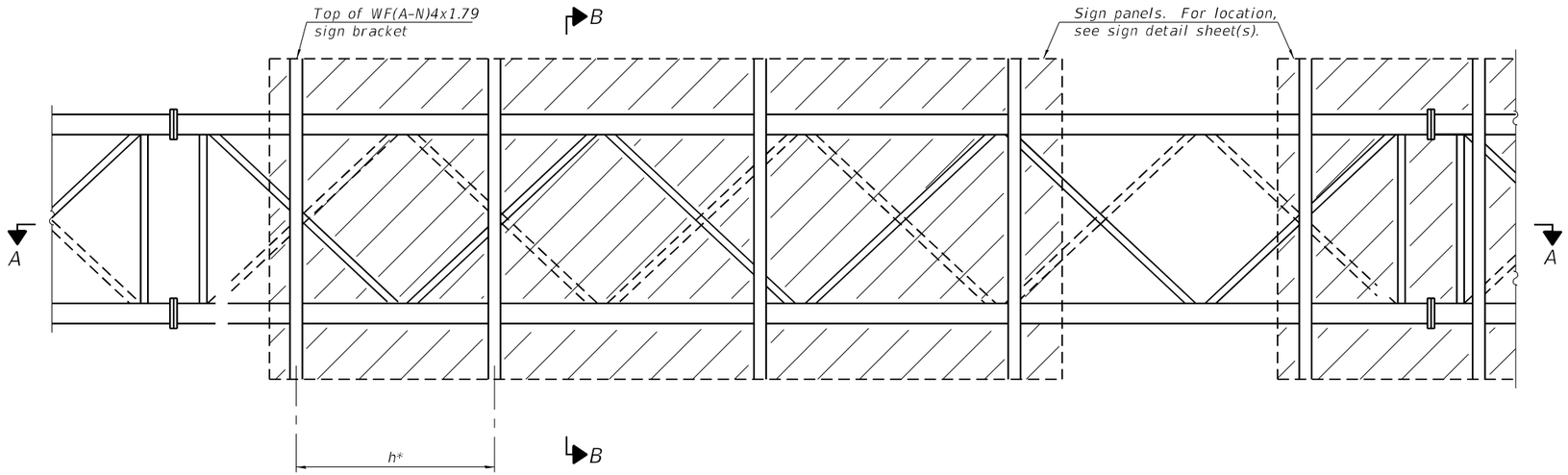

TYPICAL FRONT ELEVATION

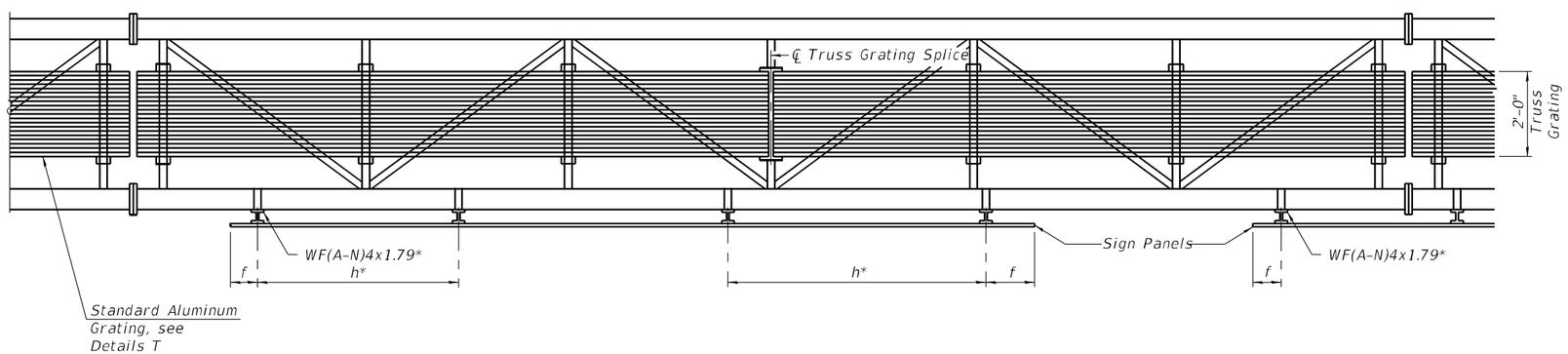

SECTION A-A

Place all sign brackets as close to panel points as practical.

BRACKET TABLE

WF(A-N)4x1.79 ASTM B308, Alloy 6061-T6		
Sign Width		Number Brackets Required
Greater Than	Less Than or Equal To	
	8'-0"	2
8'-0"	14'-0"	3
14'-0"	20'-0"	4
20'-0"	26'-0"	5
26'-0"	32'-0"	6

* Space sign brackets WF(A-N)4x1.79 for efficiency and within limits shown:

f = 12" maximum, 4" minimum (End of sign to ℄ of nearest bracket)
h = 6'-0" maximum (℄ to ℄ sign support brackets, WF(A-N)4x1.7

Notes:
For Detail T and Section B-B, see Base Sheet OS-A-10-NW.
Truss grating to facilitate inspection shall run full length (center to center of support frames) 12"± on overhead trusses. Cost of truss grating is included in "Overhead Sign Structure".
Truss Grating width dimensions are nominal and may vary ½"± based on available standard widths.

OS-A-9-NW 5-5-2023

MODJESKI and MASTERS

USER NAME = AECook	DESIGNED - UB	REVISED -	
	DRAWN - ELK	REVISED -	
PLOT SCALE = 0:2.0000 ':" / in.	CHECKED - UB	REVISED -	
PLOT DATE = 1/20/2025	DATE - 1/20/2025	REVISED -	

STATE OF ILLINOIS
DEPARTMENT OF TRANSPORTATION

OVERHEAD SIGN STRUCTURES
ALUMINUM WALKWAY DETAILS

SCALE: N.T.S. | SHEET 7 OF 8 SHEETS | STA. 201+38.73 TO STA. 201+45.73

F.A.P RTE.	SECTION	COUNTY	TOTAL SHEETS	SHEET NO.
317	(15B-1)BP,BRR; (14HB-1)BRR	PEO/TAZ	418	96
		CONTRACT NO. 68E44		
		ILLINOIS FED. AID PROJECT		

MODEL: Default
FILE NAME: P:\4312-VBM&C\LuggageRehab\CADD\Structural_Roadway (MM)\D468E44-sh-Sign-AlumTrss7.dgn
1/20/2025 7:34:11 AM

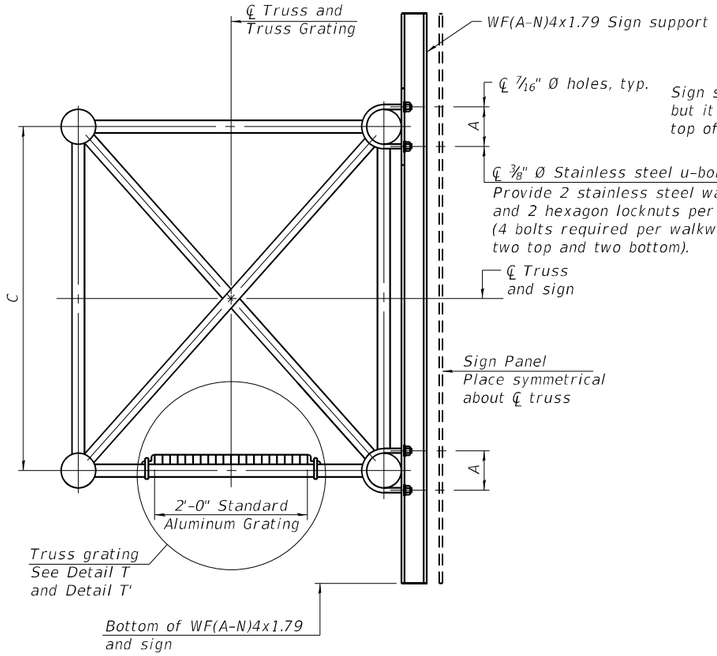

Sign shall be even with the top of the bracket, but it may extend no more than 6" above the top of the bracket for field adjustments.

SECTION B-B

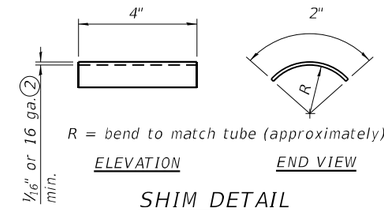

SHIM DETAIL

(1) Drilling holes in grating may be done in shop or field, based on Contractor's preference and subject to accurate alignment.

(2) Stainless steel shims shall be placed as shown in Detail T if needed to compensate for alignment variations between horizontal and diagonal pipes beyond adjustment provided by angles. Thicker shims may be used subject to shims performing properly.

(3) Tube to grating gap may vary from 0 to 1/2", max. to align walkway, allow for camber, etc.

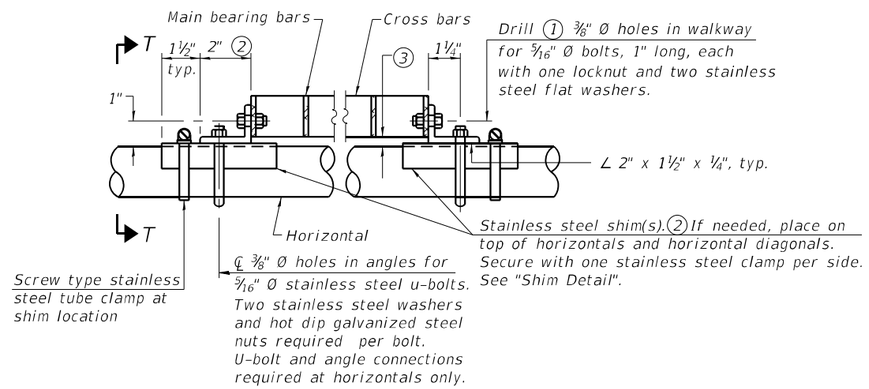

DETAIL T

(Continuous Truss grating)

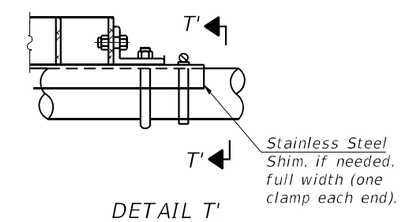

DETAIL T'

(Truss grating splice)

Details not shown same as Detail T.
Alternate materials may be used subject to the Engineer's review and approval.

SPECIFICATIONS FOR STANDARD ALUMINUM GRATING

Main Bearing Bars shall be 3/16" x 1½" on 1 3/16" centers and conform to ASTM B221 Alloy 6061-T6.

Cross bars shall be 3/16" x 1½" on 4" centers and conform to ASTM B221 Alloy 6063-T5 or 6061-T6.

OR

Aluminum Grating with modified "t" sections for main bearing bars shall meet the following requirements:

Main bars shall conform to ASTM B221 Alloy 6061-T6 and have a minimum section modulus equal to 0.0705 in.³ per bar, a depth of 1½", spaced on 1 3/16" centers.

Cross bars shall conform to ASTM B221 Alloy 6063-T5 or T-42 and spaced on 4" centers.

Structure Number	Station	A	C
4S072U150L029.01	STA. 201+42.33	4 7/8"	4'-6"

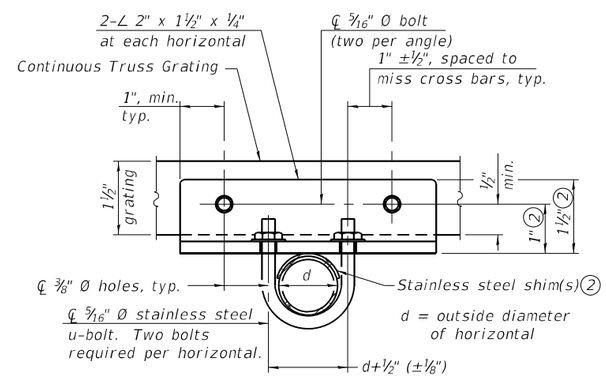

SECTION T-T

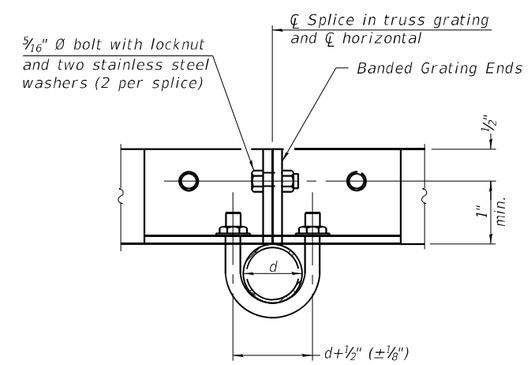

SECTION T'-T'

OS-A-10-NW 5-15-2023

MODEL: Default
FILE NAME: P:\4312-VBM\CLugageRehab\CADD\Structural_Roadway (MM)\D468E44-sht-SignAlumTrss8.dgn

MODJESKI and MASTERS

USER NAME = AECook	DESIGNED - UB	REVISED -
	DRAWN - ELK	REVISED -
PLOT SCALE = 0:2.0000 ':" / in.	CHECKED - UB	REVISED -
PLOT DATE = 1/20/2025	DATE - 1/20/2025	REVISED -

STATE OF ILLINOIS
DEPARTMENT OF TRANSPORTATION

OVERHEAD SIGN STRUCTURES
ALUMINUM WALKWAY DETAILS

SCALE: N.T.S. | SHEET 8 OF 8 SHEETS | STA. 201+38.73 TO STA. 201+45.73

F.A.P RTE.	SECTION	COUNTY	TOTAL SHEETS	SHEET NO.
317	(15B-1)BP,BRR; (14HB-1)BRR	PEO/TAZ	418	97

CONTRACT NO. 68E44

ILLINOIS FED. AID PROJECT

1/20/2025 7:34:17 AM

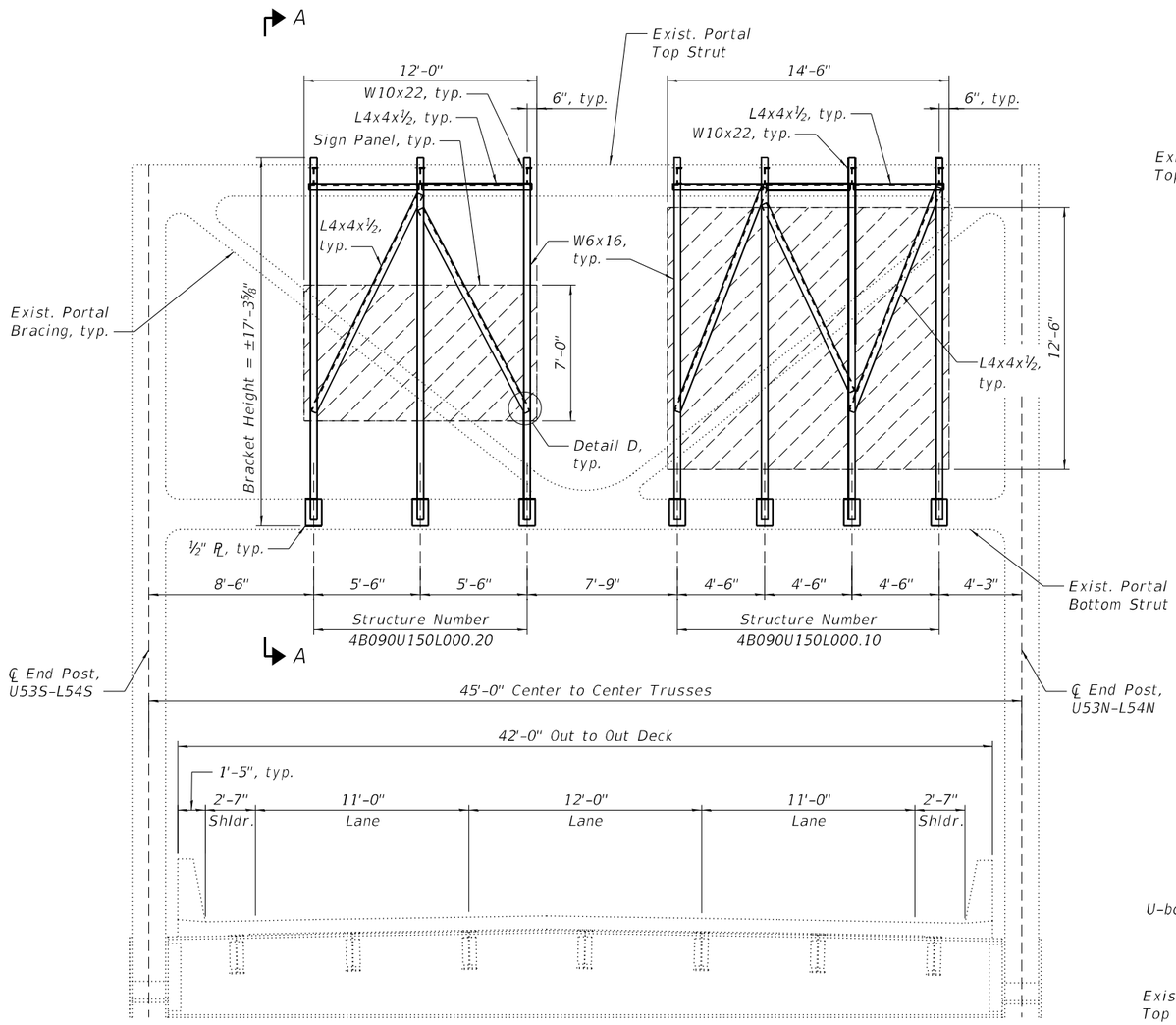

SECTION THRU BRIDGE - EAST END OF SPAN 14

(Looking West)

Bracket spacing may vary as approved by the Engineer, see (1).

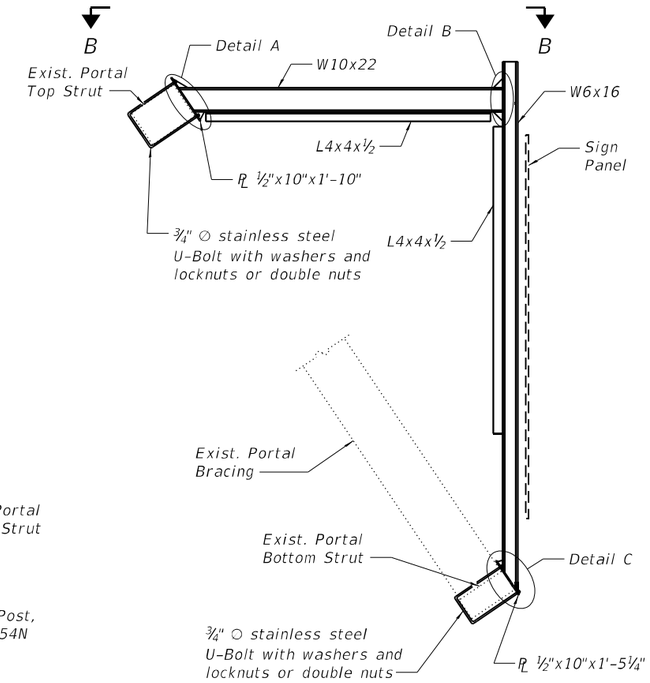

SECTION A-A

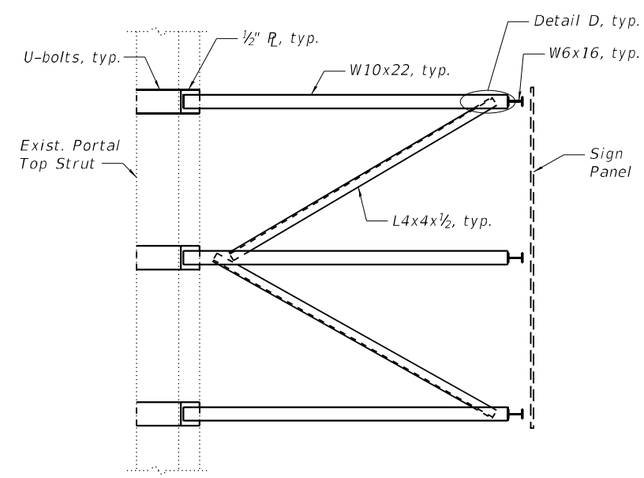

VIEW B-B

Structure Number 4B090U150L000.20 shown,
Structure Number 4B090U150L000.10 similar

GENERAL NOTES

SPECIFICATIONS:

DESIGN: AASHTO Standard Specifications for (2) Structural Supports for Highway Signs, Luminaires and Traffic Signals. ("AASHTO Specifications")

CONSTRUCTION: Current (at time of letting) Illinois Department of Transportation Standard Specifications for Road and Bridge Construction, Supplemental Specifications and Special Provisions. ("Standard Specifications")

LOADING: 90 M.P.H. WIND VELOCITY

WELDING: All welds to be continuous unless otherwise shown. All welding to be done in accordance with current AWS D1.1 Structural Welding Code (Steel) and the Standard Specificiations. Welding sign structure components to the existing bridge members is not permitted.

MATERIALS: All Structural Steel Plates and Shapes shall conform to AASHTO M270 Gr. 36, Gr. 50 (M183, M223 Gr. 50).

HIGH STRENGTH BOLTS: All bolts, washers, nuts and locknuts shall satisfy the requirements of ASTM designation A307 unless noted as "H.S." which shall require AASHTO M164 (A325), ASTM A449, or approved alternate. All fasteners shall be hot dip galvanized per AASHTO M232 unless otherwise specified.

GALVANIZING: All Steel Plates and Shapes shall be Hot Dip Galvanized after fabrication in accordance with AASHTO M111. Painting is not permitted.

U-BOLTS: U-Bolts must be produced from ASTM A276 Type 304, 304L, 316 or 316L, Condition A, cold finished stainless steel, or an equivalent material acceptable to the Engineer. All nuts for U-Bolts must be lock nuts equivalent to ASTM A307 with nylon or steel inserts and hot dip galvanized per AASHTO M232. A stainless steel flat washer conforming to ASTM A240, Type 302 or 304, is required under each U-Bolt lock nut.

Mount sign panel to maintain vertical clearance between bottom strut and roadway.

(1) Bracket spacing ≤ 6'-0", max. Spacing shall be uniform if possible but may vary ±6" to miss existing obstruction (light poles, web stiffeners, splice plates, etc.).

(2) Any design modifications shall be based on the current version of applicable specifications and submitted for the Engineer's approval.

(3) Unit price includes brackets, supports, U-bolts, fasteners, fabrication, delivery, erection, field drilling and other necessary items. Bridge mounted overhead sign structures will be measured for payment in feet from the center to center of the outermost brackets for each sign structure.

Structure Number	Sign Skew Angle (L) or (R)	Bridge Station	Bridge Structure Number	Contract Route Designation	No. of Brackets (Total)
4B090U150L000.10	0°	230+35.35	090-0115	F.A.P. 317	4
4B090U150L000.20	0°	230+35.35	090-0115	F.A.P. 317	3

TOTAL BILL OF MATERIAL

(3) OVERHEAD SIGN STRUCTURE-BRIDGE MOUNTED	Foot	24.5

MODEL: Default
FILE NAME: P:\4312-WBMcCLugageRehab\CADD\Structural_Roadway (MM)\D468E14-sh-SignBM1.dgn

MODJESKI and MASTERS

USER NAME = AECook	DESIGNED - UB	REVISED -	
	DRAWN - ELK	REVISED -	
PLOT SCALE = 0:2.0000 ':" / in.	CHECKED - UB	REVISED -	
PLOT DATE = 1/20/2025	DATE - 1/20/2025	REVISED -	

STATE OF ILLINOIS
DEPARTMENT OF TRANSPORTATION

BRIDGE MOUNT SIGN STRUCTURES
GENERAL PLAN AND ELEVATION

SCALE: N.T.S. | SHEET 1 OF 2 SHEETS | STA. 230+22.54 TO STA. 230+50.82

F.A.P RTE.	SECTION	COUNTY	TOTAL SHEETS	SHEET NO.
317	(15B-1)BP,BRR; (14HB-1)BRR	PEO/TAZ	418	98

CONTRACT NO. 68E44

ILLINOIS | FED. AID PROJECT

1/20/2025 7:34:24 AM

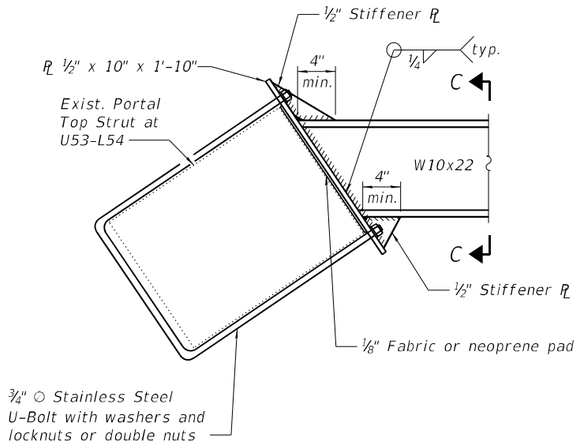

DETAIL A

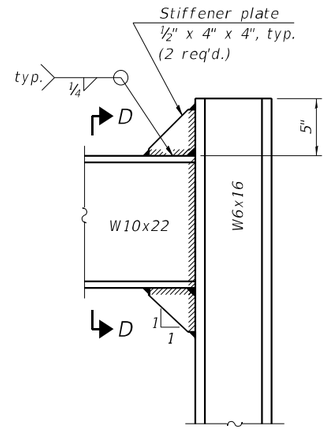

DETAIL B - WELDED W10x22 TO W6x16 CONNECTION

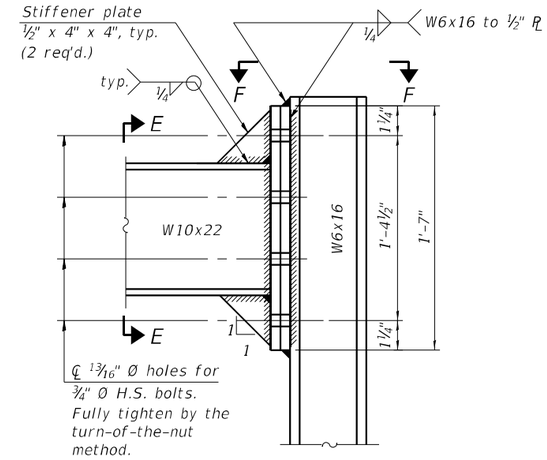

DETAIL B - ALTERNATE BOLTED W10x22 TO W6x12 CONNECTION

Alternate may be substituted by contractor to facilitate construction or galvanizing.

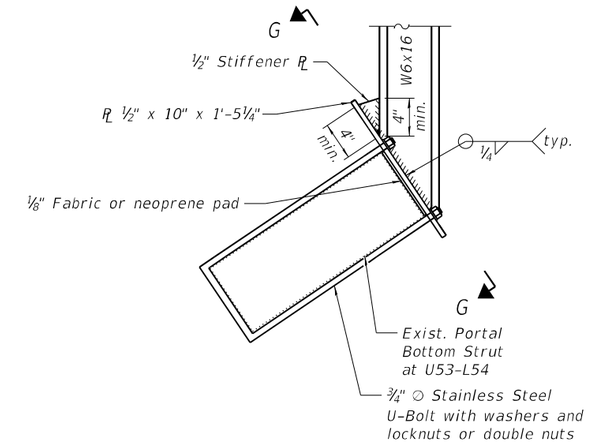

DETAIL C

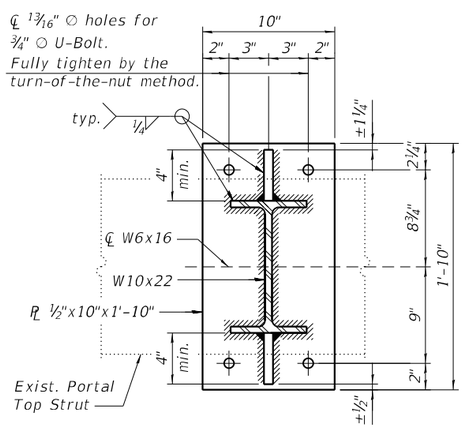

SECTION C-C

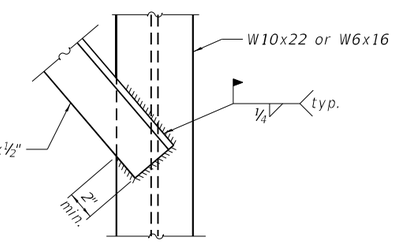

DETAIL D

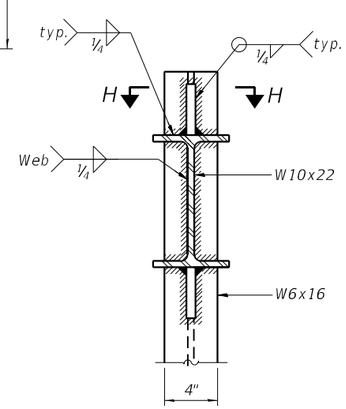

SECTION D-D

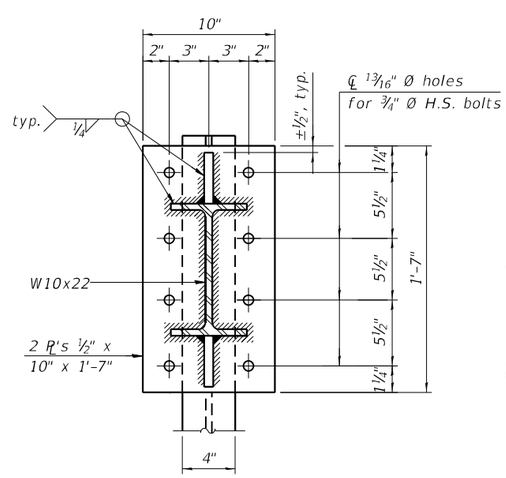

SECTION E-E

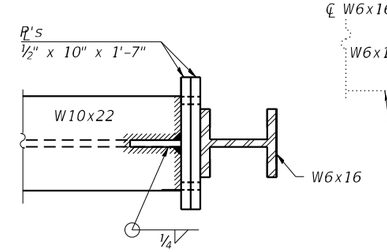

SECTION F-F

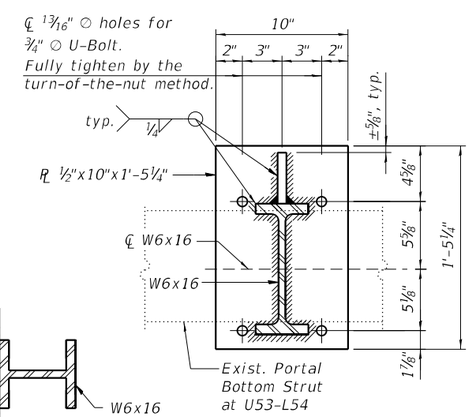

SECTION G-G

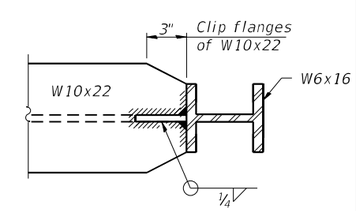

SECTION H-H

MODEL: Default
FILE NAME: P:\4312-VBM&C\LuggageRehab\CADD\Structural_Roadway (MM)\D468E44-sh-Sign-BM2.dgn

MODJESKI and MASTERS	USER NAME = AECook	DESIGNED - UB	REVISED -
		DRAWN - ELK	REVISED -
	PLOT SCALE = 0:2.0000 ':" / in.	CHECKED - YSS	REVISED -
	PLOT DATE = 1/20/2025	DATE - 1/20/2025	REVISED -

STATE OF ILLINOIS
DEPARTMENT OF TRANSPORTATION

BRIDGE MOUNT SIGN STRUCTURES
CONNECTION DETAILS

SCALE: N.T.S. | SHEET 2 OF 2 SHEETS | STA. 230+22.54 TO STA. 230+50.82

F.A.P RTE.	SECTION	COUNTY	TOTAL SHEETS	SHEET NO.
317	(15B-1)BP,BRR; (14HB-1)BRR	PEO/TAZ	418	99

CONTRACT NO. 68E44

ILLINOIS | FED. AID PROJECT

1/20/2025 7:34:30 AM

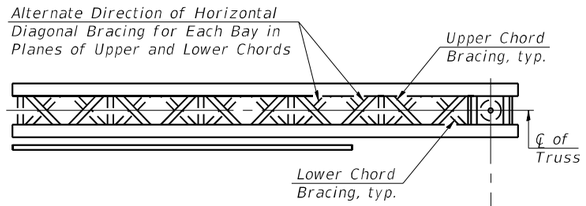

TYPICAL PLAN

(Walkway not shown)

Structure Number	Station	Design Truss Type	Cantilever Length (L)	Elev. A	Dim. D	Ds	Total Sign Area
4C090U024L000.46	249+42.00	II-C-A	27'-6"	464.92	6'-11"	14'-6"	210.25 ft²

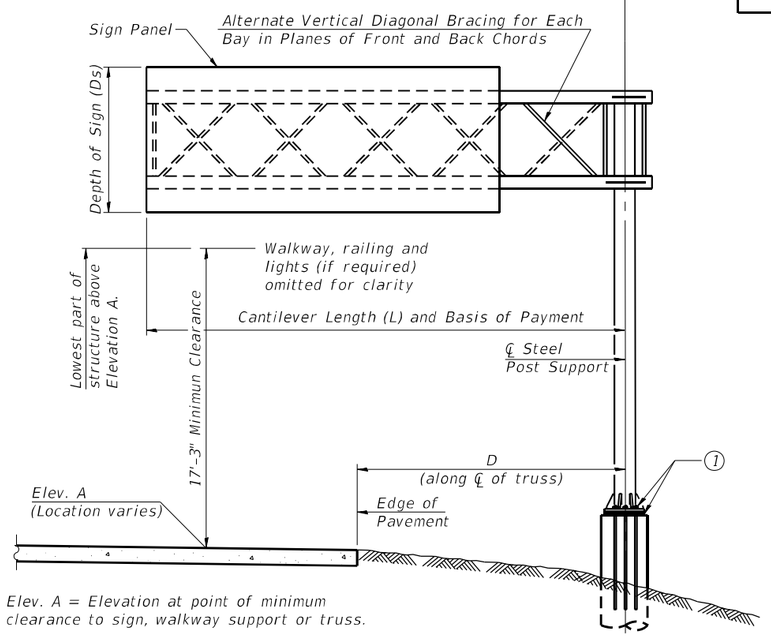

Elev. A = Elevation at point of minimum clearance to sign, walkway support or truss.

TYPICAL ELEVATION

Looking in Direction of Traffic

Sign support structures may be subject to damaging vibrations and oscillations when sign panels are not in place during erection or maintenance of the structure. To avoid these vibrations and oscillations, consideration should be given to attaching temporary blank sign panels to the structure.

Truss Type	Maximum Sign Area	Maximum Length
I-C-A	170 Sq. Ft.	25 Ft.
II-C-A	340 Sq. Ft.	30 Ft.
III-C-A	400 Sq. Ft.	40 Ft.

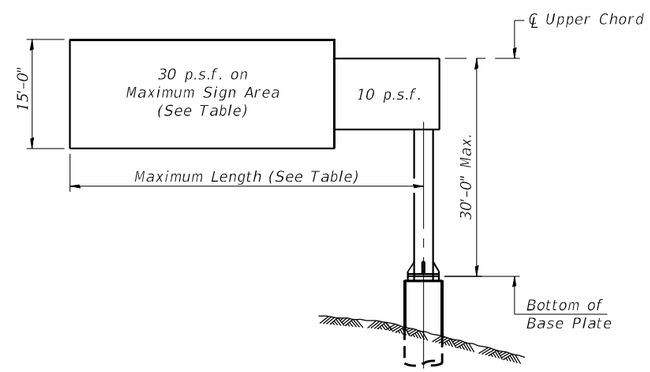

DESIGN WIND LOADING DIAGRAM

Parameters shown are basis for I.D.O.T. Standards Installations not within dimensional limits shown require special analysis for all components.

Note:
Trusses shall be shipped individually with adequate provision to prevent detrimental motion during transport. This may require ropes between horizontals and diagonals or energy dissipating (elastic) ties to the vehicle. The contractor is responsible for maintaining the configuration and protection of the trusses.

1 After adjustments to level truss and insure adequate vertical clearance, all top and leveling nuts shall be tightened against the base plate with a minimum torque of 200 lb.-ft. Stainless steel mesh shall then be placed around the perimeter of the base plate. Secure to base plate with stainless steel banding.

* If M270 Gr. 50W (M222) steel is proposed, chemistry for plate to be used shall first be approved by the Engineer as suitable for galvanizing and welding.

GENERAL NOTES

DESIGN: AASHTO Standard Specifications for Structural Supports for Highway Signs, Luminaires and Traffic Signals. ("AASHTO Specifications")

CONSTRUCTION: Current (at time of letting) Illinois Department of Transportation Standard Specifications for Road and Bridge Construction, Supplemental Specifications and Special Provisions. ("Standard Specifications")

LOADING: 90 M.P.H. WIND VELOCITY

WALKWAY LOADING: Dead load plus 500 lbs. concentrated live load.

DESIGN STRESSES:
Field Units
f' = 3,500 p.s.i.
fy = 60,000 p.s.i. (reinforcement)

WELDING: All welds to be continuous unless otherwise shown. All welding to be done in accordance with current AWS D1.1 and D1.2 Structural Welding Codes (Steel and Aluminum) and the Standard Specificiations.

MATERIALS: Aluminum Alloys as shown throughout plans. All Structural Steel Pipe shall be ASTM A53 Grade B or A500 Grade B or C. If A500 pipe is substituted for A53, then the outside diameter shall be as detailed and wall thickness greater than or equal to A53.
All Structural Steel Plates and Shapes shall conform to AASHTO M270 Gr. 36, Gr. 50 or Gr. 50W*. Stainless steel for shims, sleeves and handhole covers shall be ASTM A240, Type 302 or 304, or another alloy suitable for exterior exposure and acceptable to the Engineer.
The steel pipe and stiffening ribs at the base plate for the column shall have a minimum longitudinal Charpy V-Notch (CVN) energy of 15 lb.-ft. at 40° F. (Zone 2) before galvanizing.

FASTENERS FOR ALUMINUM TRUSSES: All bolts noted as "high strength" must satisfy the requirements of AASHTO M164 (ASTM A325), or approved alternate, and must have matching lock nuts. Threaded studs for splices (if Members interfere) must satisfy the requirements of ASTM A449, ASTM A193, Grade B7, or approved alternate, and must have matching lock nuts. Bolts and lock nuts not required to be high strength must satisfy the requirements of ASTM A307. All bolts and lock nuts must be hot dip galvanized per AASHTO M232. The lock nuts must have nylon or steel inserts. A stainless steel flat washer conforming to ASTM A240 Type 302 or 304, is required under both head and nut or under both nuts where threaded studs are used. High strength bolt installation shall conform to Article 505.04 (f) (2)d of the IDOT Standard Specifications for Road and Bridge Construction. Rotational capacity ("ROCAP") testing of bolts will not be required.

U-BOLTS AND EYEBOLTS: U-Bolts and Eyebolts must be produced from ASTM A276 Type 304, 304L, 316 or 316L, Condition A, cold finished stainless steel, or an equivalent material acceptable to the Engineer. All nuts for U-Bolts and Eyebolts must be lock nuts equivalent to ASTM A307 with nylon or steel inserts and hot dip galvanized per AASHTO M232. A stainless steel flat washer conforming to ASTM A240, Type 302 or 304, is required under each U-Bolt and Eyebolt lock nut.

GALVANIZING: All Steel Grating, Plates, Shapes and Pipe shall be Hot Dip Galvanized after fabrication in accordance with AASHTO M111. Painting is not permitted.

ANCHOR RODS: Shall conform to ASTM F1554 Gr. 105.

CONCRETE SURFACES: All concrete surfaces above an elevation 6" below the lowest final ground line at each foundation shall be cleaned and coated with Concrete Sealer in accordance with the Standard Specifications.

REINFORCEMENT BARS: Reinforcement Bars designated (E) shall be epoxy coated in accordance with the Standard Specifications.

FOUNDATIONS: The contract unit price for Drilled Shaft Concrete Foundations shall include reinforcement bars complete in place.

TOTAL BILL OF MATERIAL

ITEM	UNIT	TOTAL
OVERHEAD SIGN STRUCTURE - CANTILEVER, TYPE II-C-A (36" X 5'-6")	Foot	27.5
DRILLED SHAFT CONCRETE FOUNDATIONS	Cu. Yds.	9.3

OSC-A-1 5-15-2023

MODJESKI and MASTERS

USER NAME = AECook	DESIGNED -	REVISED -
	DRAWN -	REVISED -
PLOT SCALE = 0:2.0000 ':" / in.	CHECKED -	REVISED -
PLOT DATE = 1/20/2025	DATE - 1/20/2025	REVISED -

STATE OF ILLINOIS
DEPARTMENT OF TRANSPORTATION

CANTILEVER SIGN STRUCTURES - GENERAL PLAN & ELEVATION
ALUMINUM TRUSS & STEEL POST

SCALE: N.T.S. | SHEET 1 OF 8 SHEETS | STA. | TO STA.

F.A.P RTE.	SECTION	COUNTY	TOTAL SHEETS	SHEET NO.
317	(15B-1)BP,BRR; (14HB-1)BRR	PEO/TAZ	418	100

CONTRACT NO. 68E44

ILLINOIS | FED. AID PROJECT

MODEL: Default
FILE NAME: P:\4312-VBM\CLbgeRehab\CADD\Structural_Roadway (MM)\D468E44-sh-SignCnt1.dgn
1/20/2025 7:34:36 AM