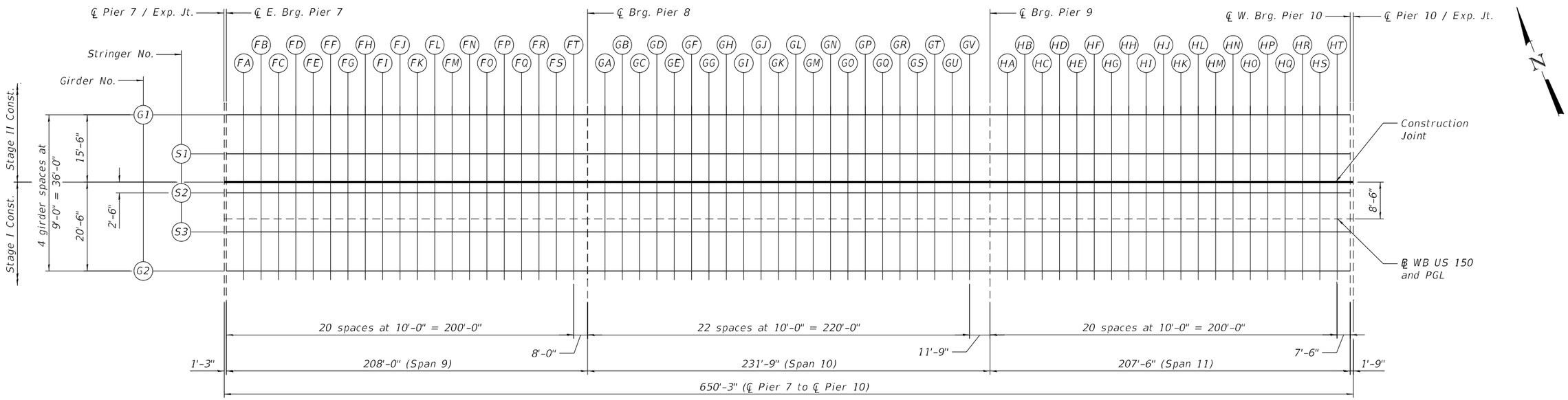

PLAN

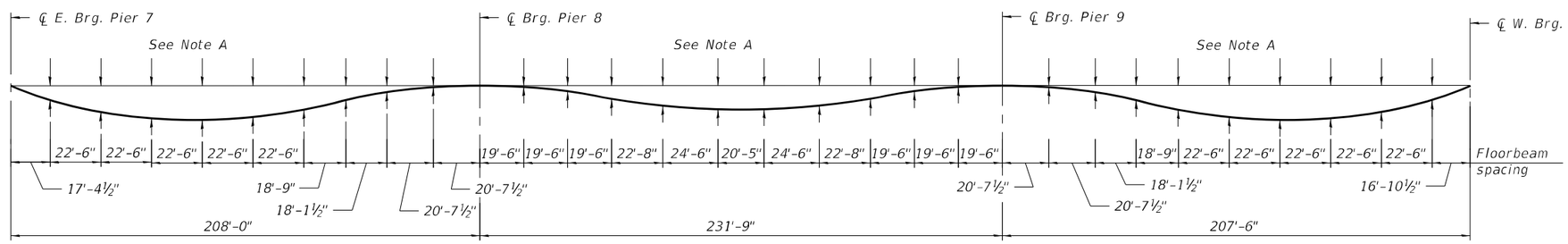

GIRDER
DEAD LOAD DEFLECTION DIAGRAM

Includes weight of concrete only.

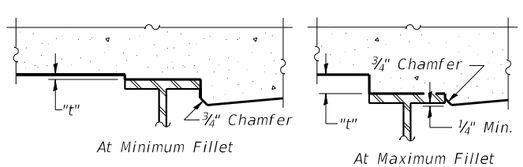

To determine "t": After all structural steel has been erected, elevations of the top flanges of the beams shall be taken at intervals shown on sheets S32 thru S34 of S214. These elevations subtracted from the "Theoretical Grade Elevations Adjusted for Dead Load Deflection and Grinding" shown on sheets S32 thru S34 of S214, minus the initial slab thickness prior to grinding, equals the fillet heights "t" above top flange of beams.

The slab is to be ground after curing to achieve smoothness, but the slab is not to be ground to elevations below the "Theoretical Grade Elevations" shown on sheets S32 thru S34 of S214. For grinding the deck, see Special Provisions.

FILLET HEIGHTS

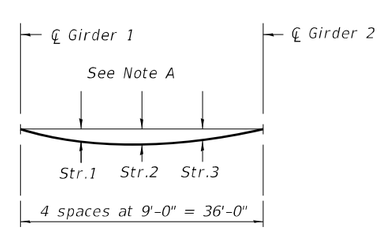

FLOORBEAM
DEAD LOAD DEFLECTION DIAGRAM

Includes weight of concrete only.

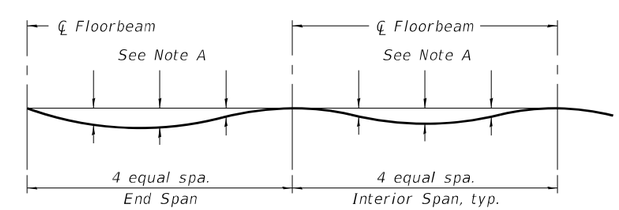

STRINGER
DEAD LOAD DEFLECTION DIAGRAM

Includes weight of concrete only.

Note:
The dead load deflections are not to be used in the field if the engineer is working from the grade elevations adjusted for dead load deflections and grinding as shown on sheets S32 thru S34 of S214.

Note A:
Dead load deflections will be provided to the Contractor in accordance with the special provision "Contractor Requirements for Dead Load Deflection and Top of Slab Elevation Data."

MODEL: PLOTSHEET-59-S11_1
FILE NAME: P:\4312-WBRtCbligageRehab\CADD\Structural_SN 090-0115_WBMainBridge_Final Plans\0900115-68E44-031-TOSE-5spans 9-11_01.dgn

MODJESKI and MASTERS

USER NAME =	DESIGNED - YSS	REVISED -	
	CHECKED - JCH	REVISED -	
PLOT SCALE =	DRAWN - JJE	REVISED -	
PLOT DATE =	CHECKED - YSS	REVISED -	

STATE OF ILLINOIS
DEPARTMENT OF TRANSPORTATION

TOP OF SLAB ELEVATIONS - SPANS 9-11 - 1
STRUCTURE NO. 090-0115

SHEET S31 OF S214 SHEETS

F.A.P. RTE.	SECTION	COUNTY	TOTAL SHEETS	SHEET NO.
317	(15B-1)BP,BRR	PEO/TAZ	418	201
		CONTRACT NO. 68E44		
	ILLINOIS	FED. AID PROJECT		

3/13/2025 12:39:25 PM

GIRDER 1

Location	Station	Offset	Theoretical Grade Elevations	Theoretical Grade Elevations Adjusted For Dead Load Deflection and Grinding
CL E. Brg. Pier 7	208+69.77	-24.00	498.40	
FA	208+79.77	-24.00	498.40	
FB	208+89.77	-24.00	498.40	
FC	208+99.77	-24.00	498.40	
FD	209+09.77	-24.00	498.40	
FE	209+19.77	-24.00	498.41	See Note A
FF	209+29.77	-24.00	498.41	
FG	209+39.77	-24.00	498.41	
FH	209+49.77	-24.00	498.41	
FI	209+59.77	-24.00	498.42	
FJ	209+69.77	-24.00	498.42	
FK	209+79.77	-24.00	498.42	
FL	209+89.77	-24.00	498.42	
FM	209+99.77	-24.00	498.42	
FN	210+09.77	-24.00	498.43	
FO	210+19.77	-24.00	498.43	
FP	210+29.77	-24.00	498.43	
FQ	210+39.77	-24.00	498.43	
FR	210+49.77	-24.00	498.44	
FS	210+59.77	-24.00	498.44	
FT	210+69.77	-24.00	498.44	
CL Brg. Pier 8	210+77.77	-24.00	498.44	
GA	210+87.77	-24.00	498.44	
GB	210+97.77	-24.00	498.45	
GC	211+07.77	-24.00	498.45	
GD	211+17.77	-24.00	498.45	
GE	211+27.77	-24.00	498.45	
GF	211+37.77	-24.00	498.45	
GG	211+47.77	-24.00	498.46	
GH	211+57.77	-24.00	498.46	
GI	211+67.77	-24.00	498.46	
GJ	211+77.77	-24.00	498.46	
GK	211+87.77	-24.00	498.47	
GL	211+97.77	-24.00	498.47	
GM	212+07.77	-24.00	498.48	
GN	212+17.77	-24.00	498.51	
GO	212+27.77	-24.00	498.54	
GP	212+37.77	-24.00	498.58	
GQ	212+47.77	-24.00	498.63	
GR	212+57.77	-24.00	498.69	
GS	212+67.77	-24.00	498.76	
GT	212+77.77	-24.00	498.84	
GU	212+87.77	-24.00	498.93	
GV	212+97.77	-24.00	499.03	
CL Brg. Pier 9	213+09.52	-24.00	499.15	
HA	213+19.52	-24.00	499.27	
HB	213+29.52	-24.00	499.39	
HC	213+39.52	-24.00	499.53	
HD	213+49.52	-24.00	499.68	
HE	213+59.52	-24.00	499.83	
HF	213+69.52	-24.00	499.99	
HG	213+79.52	-24.00	500.17	
HH	213+89.52	-24.00	500.35	
HI	213+99.52	-24.00	500.54	
HJ	214+09.52	-24.00	500.74	
HK	214+19.52	-24.00	500.94	
HL	214+29.52	-24.00	501.15	
HM	214+39.52	-24.00	501.35	
HN	214+49.52	-24.00	501.56	
HO	214+59.52	-24.00	501.76	
HP	214+69.52	-24.00	501.97	
HQ	214+79.52	-24.00	502.18	
HR	214+89.52	-24.00	502.38	
HS	214+99.52	-24.00	502.59	
HT	215+09.52	-24.00	502.79	
CL W. Brg. Pier 10	215+17.02	-24.00	502.94	
CL Pier 10 / Exp. Jt.	215+18.77	-24.00	502.98	

STRINGER 1

Location	Station	Offset	Theoretical Grade Elevations	Theoretical Grade Elevations Adjusted For Dead Load Deflection and Grinding
CL E. Brg. Pier 7	208+69.77	-15.00	498.58	
FA	208+79.77	-15.00	498.58	
FB	208+89.77	-15.00	498.58	
FC	208+99.77	-15.00	498.58	
FD	209+09.77	-15.00	498.58	
FE	209+19.77	-15.00	498.59	See Note A
FF	209+29.77	-15.00	498.59	
FG	209+39.77	-15.00	498.59	
FH	209+49.77	-15.00	498.59	
FI	209+59.77	-15.00	498.60	
FJ	209+69.77	-15.00	498.60	
FK	209+79.77	-15.00	498.60	
FL	209+89.77	-15.00	498.60	
FM	209+99.77	-15.00	498.60	
FN	210+09.77	-15.00	498.61	
FO	210+19.77	-15.00	498.61	
FP	210+29.77	-15.00	498.61	
FQ	210+39.77	-15.00	498.61	
FR	210+49.77	-15.00	498.62	
FS	210+59.77	-15.00	498.62	
FT	210+69.77	-15.00	498.62	
CL Brg. Pier 8	210+77.77	-15.00	498.62	
GA	210+87.77	-15.00	498.62	
GB	210+97.77	-15.00	498.63	
GC	211+07.77	-15.00	498.63	
GD	211+17.77	-15.00	498.63	
GE	211+27.77	-15.00	498.63	
GF	211+37.77	-15.00	498.63	
GG	211+47.77	-15.00	498.64	
GH	211+57.77	-15.00	498.64	
GI	211+67.77	-15.00	498.64	
GJ	211+77.77	-15.00	498.64	
GK	211+87.77	-15.00	498.65	
GL	211+97.77	-15.00	498.65	
GM	212+07.77	-15.00	498.66	
GN	212+17.77	-15.00	498.69	
GO	212+27.77	-15.00	498.72	
GP	212+37.77	-15.00	498.76	
GQ	212+47.77	-15.00	498.81	
GR	212+57.77	-15.00	498.87	
GS	212+67.77	-15.00	498.94	
GT	212+77.77	-15.00	499.02	
GU	212+87.77	-15.00	499.11	
GV	212+97.77	-15.00	499.21	
CL Brg. Pier 9	213+09.52	-15.00	499.33	
HA	213+19.52	-15.00	499.45	
HB	213+29.52	-15.00	499.57	
HC	213+39.52	-15.00	499.71	
HD	213+49.52	-15.00	499.86	
HE	213+59.52	-15.00	500.01	
HF	213+69.52	-15.00	500.17	
HG	213+79.52	-15.00	500.35	
HH	213+89.52	-15.00	500.53	
HI	213+99.52	-15.00	500.72	
HJ	214+09.52	-15.00	500.92	
HK	214+19.52	-15.00	501.12	
HL	214+29.52	-15.00	501.33	
HM	214+39.52	-15.00	501.53	
HN	214+49.52	-15.00	501.74	
HO	214+59.52	-15.00	501.94	
HP	214+69.52	-15.00	502.15	
HQ	214+79.52	-15.00	502.36	
HR	214+89.52	-15.00	502.56	
HS	214+99.52	-15.00	502.77	
HT	215+09.52	-15.00	502.97	
CL W. Brg. Pier 10	215+17.02	-15.00	503.12	
CL Pier 10 / Exp. Jt.	215+18.77	-15.00	503.16	

CONSTRUCTION JOINT

Location	Station	Offset	Theoretical Grade Elevations	Theoretical Grade Elevations Adjusted For Dead Load Deflection and Grinding
CL E. Brg. Pier 7	208+69.77	-8.50	498.69	
FA	208+79.77	-8.50	498.69	
FB	208+89.77	-8.50	498.69	
FC	208+99.77	-8.50	498.70	
FD	209+09.77	-8.50	498.70	
FE	209+19.77	-8.50	498.70	See Note A
FF	209+29.77	-8.50	498.70	
FG	209+39.77	-8.50	498.70	
FH	209+49.77	-8.50	498.71	
FI	209+59.77	-8.50	498.71	
FJ	209+69.77	-8.50	498.71	
FK	209+79.77	-8.50	498.71	
FL	209+89.77	-8.50	498.71	
FM	209+99.77	-8.50	498.72	
FN	210+09.77	-8.50	498.72	
FO	210+19.77	-8.50	498.72	
FP	210+29.77	-8.50	498.72	
FQ	210+39.77	-8.50	498.73	
FR	210+49.77	-8.50	498.73	
FS	210+59.77	-8.50	498.73	
FT	210+69.77	-8.50	498.73	
CL Brg. Pier 8	210+77.77	-8.50	498.73	
GA	210+87.77	-8.50	498.74	
GB	210+97.77	-8.50	498.74	
GC	211+07.77	-8.50	498.74	
GD	211+17.77	-8.50	498.74	
GE	211+27.77	-8.50	498.75	
GF	211+37.77	-8.50	498.75	
GG	211+47.77	-8.50	498.75	
GH	211+57.77	-8.50	498.75	
GI	211+67.77	-8.50	498.75	
GJ	211+77.77	-8.50	498.76	
GK	211+87.77	-8.50	498.76	
GL	211+97.77	-8.50	498.76	
GM	212+07.77	-8.50	498.78	
GN	212+17.77	-8.50	498.80	
GO	212+27.77	-8.50	498.83	
GP	212+37.77	-8.50	498.87	
GQ	212+47.77	-8.50	498.93	
GR	212+57.77	-8.50	498.99	
GS	212+67.77	-8.50	499.05	
GT	212+77.77	-8.50	499.13	
GU	212+87.77	-8.50	499.22	
GV	212+97.77	-8.50	499.32	
CL Brg. Pier 9	213+09.52	-8.50	499.44	
HA	213+19.52	-8.50	499.56	
HB	213+29.52	-8.50	499.69	
HC	213+39.52	-8.50	499.82	
HD	213+49.52	-8.50	499.97	
HE	213+59.52	-8.50	500.12	
HF	213+69.52	-8.50	500.29	
HG	213+79.52	-8.50	500.46	
HH	213+89.52	-8.50	500.64	
HI	213+99.52	-8.50	500.83	
HJ	214+09.52	-8.50	501.03	
HK	214+19.52	-8.50	501.24	
HL	214+29.52	-8.50	501.44	
HM	214+39.52	-8.50	501.65	
HN	214+49.52	-8.50	501.85	
HO	214+59.52	-8.50	502.06	
HP	214+69.52	-8.50	502.26	
HQ	214+79.52	-8.50	502.47	
HR	214+89.52	-8.50	502.67	
HS	214+99.52	-8.50	502.88	
HT	215+09.52	-8.50	503.08	
CL W. Brg. Pier 10	215+17.02	-8.50	503.24	
CL Pier 10 / Exp. Jt.	215+18.77	-8.50	503.27	

Note A:
Theoretical Grade Elevations Adjusted for Dead Load Deflection and Grinding will be provided to the Contractor in accordance with the special provision "Contractor Requirements for Dead Load Deflection and Top of Slab Elevation Data."

STRINGER 2

Location	Station	Offset	Theoretical Grade Elevations	Theoretical Grade Elevations Adjusted For Dead Load Deflection and Grinding
CL E. Brg. Pier 7	208+69.77	-6.00	498.73	
FA	208+79.77	-6.00	498.73	
FB	208+89.77	-6.00	498.73	
FC	208+99.77	-6.00	498.73	
FD	209+09.77	-6.00	498.73	
FE	209+19.77	-6.00	498.74	
FF	209+29.77	-6.00	498.74	
FG	209+39.77	-6.00	498.74	
FH	209+49.77	-6.00	498.74	
FI	209+59.77	-6.00	498.75	See Note A
FJ	209+69.77	-6.00	498.75	
FK	209+79.77	-6.00	498.75	
FL	209+89.77	-6.00	498.75	
FM	209+99.77	-6.00	498.75	
FN	210+09.77	-6.00	498.76	
FO	210+19.77	-6.00	498.76	
FP	210+29.77	-6.00	498.76	
FQ	210+39.77	-6.00	498.76	
FR	210+49.77	-6.00	498.77	
FS	210+59.77	-6.00	498.77	
FT	210+69.77	-6.00	498.77	
CL Brg. Pier 8	210+77.77	-6.00	498.77	
GA	210+87.77	-6.00	498.77	
GB	210+97.77	-6.00	498.78	
GC	211+07.77	-6.00	498.78	
GD	211+17.77	-6.00	498.78	
GE	211+27.77	-6.00	498.78	
GF	211+37.77	-6.00	498.78	
GG	211+47.77	-6.00	498.79	
GH	211+57.77	-6.00	498.79	
GI	211+67.77	-6.00	498.79	
GJ	211+77.77	-6.00	498.79	
GK	211+87.77	-6.00	498.80	
GL	211+97.77	-6.00	498.80	
GM	212+07.77	-6.00	498.81	
GN	212+17.77	-6.00	498.84	
GO	212+27.77	-6.00	498.87	
GP	212+37.77	-6.00	498.91	
GQ	212+47.77	-6.00	498.96	
GR	212+57.77	-6.00	499.02	
GS	212+67.77	-6.00	499.09	
GT	212+77.77	-6.00	499.17	
GU	212+87.77	-6.00	499.26	
GV	212+97.77	-6.00	499.36	
CL Brg. Pier 9	213+09.52	-6.00	499.48	
HA	213+19.52	-6.00	499.60	
HB	213+29.52	-6.00	499.72	
HC	213+39.52	-6.00	499.86	
HD	213+49.52	-6.00	500.01	
HE	213+59.52	-6.00	500.16	
HF	213+69.52	-6.00	500.32	
HG	213+79.52	-6.00	500.50	
HH	213+89.52	-6.00	500.68	
HI	213+99.52	-6.00	500.87	
HJ	214+09.52	-6.00	501.07	
HK	214+19.52	-6.00	501.27	
HL	214+29.52	-6.00	501.48	
HM	214+39.52	-6.00	501.68	
HN	214+49.52	-6.00	501.89	
HO	214+59.52	-6.00	502.09	
HP	214+69.52	-6.00	502.30	
HQ	214+79.52	-6.00	502.51	
HR	214+89.52	-6.00	502.71	
HS	214+99.52	-6.00	502.92	
HT	215+09.52	-6.00	503.12	
CL W. Brg. Pier 10	215+17.02	-6.00	503.27	
CL Pier 10 / Exp. Jt.	215+18.77	-6.00	503.31	

℄ WB US 150 AND PG

Location	Station	Offset	Theoretical Grade Elevations	Theoretical Grade Elevations Adjusted For Dead Load Deflection and Grinding
CL E. Brg. Pier 7	208+69.77	0.00	498.82	
FA	208+79.77	0.00	498.82	
FB	208+89.77	0.00	498.82	
FC	208+99.77	0.00	498.82	
FD	209+09.77	0.00	498.82	
FE	209+19.77	0.00	498.83	
FF	209+29.77	0.00	498.83	
FG	209+39.77	0.00	498.83	
FH	209+49.77	0.00	498.83	
FI	209+59.77	0.00	498.84	See Note A
FJ	209+69.77	0.00	498.84	
FK	209+79.77	0.00	498.84	
FL	209+89.77	0.00	498.84	
FM	209+99.77	0.00	498.84	
FN	210+09.77	0.00	498.85	
FO	210+19.77	0.00	498.85	
FP	210+29.77	0.00	498.85	
FQ	210+39.77	0.00	498.85	
FR	210+49.77	0.00	498.86	
FS	210+59.77	0.00	498.86	
FT	210+69.77	0.00	498.86	
CL Brg. Pier 8	210+77.77	0.00	498.86	
GA	210+87.77	0.00	498.86	
GB	210+97.77	0.00	498.87	
GC	211+07.77	0.00	498.87	
GD	211+17.77	0.00	498.87	
GE	211+27.77	0.00	498.87	
GF	211+37.77	0.00	498.87	
GG	211+47.77	0.00	498.88	
GH	211+57.77	0.00	498.88	
GI	211+67.77	0.00	498.88	
GJ	211+77.77	0.00	498.88	
GK	211+87.77	0.00	498.89	
GL	211+97.77	0.00	498.89	
GM	212+07.77	0.00	498.90	
GN	212+17.77	0.00	498.93	
GO	212+27.77	0.00	498.96	
GP	212+37.77	0.00	499.00	
GQ	212+47.77	0.00	499.05	
GR	212+57.77	0.00	499.11	
GS	212+67.77	0.00	499.18	
GT	212+77.77	0.00	499.26	
GU	212+87.77	0.00	499.35	
GV	212+97.77	0.00	499.45	
CL Brg. Pier 9	213+09.52	0.00	499.57	
HA	213+19.52	0.00	499.69	
HB	213+29.52	0.00	499.81	
HC	213+39.52	0.00	499.95	
HD	213+49.52	0.00	500.10	
HE	213+59.52	0.00	500.25	
HF	213+69.52	0.00	500.41	
HG	213+79.52	0.00	500.59	
HH	213+89.52	0.00	500.77	
HI	213+99.52	0.00	500.96	
HJ	214+09.52	0.00	501.16	
HK	214+19.52	0.00	501.36	
HL	214+29.52	0.00	501.57	
HM	214+39.52	0.00	501.77	
HN	214+49.52	0.00	501.98	
HO	214+59.52	0.00	502.18	
HP	214+69.52	0.00	502.39	
HQ	214+79.52	0.00	502.60	
HR	214+89.52	0.00	502.80	
HS	214+99.52	0.00	503.01	
HT	215+09.52	0.00	503.21	
CL W. Brg. Pier 10	215+17.02	0.00	503.36	
CL Pier 10 / Exp. Jt.	215+18.77	0.00	503.40	

STRINGER 3

Location	Station	Offset	Theoretical Grade Elevations	Theoretical Grade Elevations Adjusted For Dead Load Deflection and Grinding
CL E. Brg. Pier 7	208+69.77	3.00	498.77	
FA	208+79.77	3.00	498.77	
FB	208+89.77	3.00	498.78	
FC	208+99.77	3.00	498.78	
FD	209+09.77	3.00	498.78	
FE	209+19.77	3.00	498.78	
FF	209+29.77	3.00	498.78	
FG	209+39.77	3.00	498.79	
FH	209+49.77	3.00	498.79	
FI	209+59.77	3.00	498.79	See Note A
FJ	209+69.77	3.00	498.79	
FK	209+79.77	3.00	498.80	
FL	209+89.77	3.00	498.80	
FM	209+99.77	3.00	498.80	
FN	210+09.77	3.00	498.80	
FO	210+19.77	3.00	498.80	
FP	210+29.77	3.00	498.81	
FQ	210+39.77	3.00	498.81	
FR	210+49.77	3.00	498.81	
FS	210+59.77	3.00	498.81	
FT	210+69.77	3.00	498.81	
CL Brg. Pier 8	210+77.77	3.00	498.82	
GA	210+87.77	3.00	498.82	
GB	210+97.77	3.00	498.82	
GC	211+07.77	3.00	498.82	
GD	211+17.77	3.00	498.83	
GE	211+27.77	3.00	498.83	
GF	211+37.77	3.00	498.83	
GG	211+47.77	3.00	498.83	
GH	211+57.77	3.00	498.83	
GI	211+67.77	3.00	498.84	
GJ	211+77.77	3.00	498.84	
GK	211+87.77	3.00	498.84	
GL	211+97.77	3.00	498.85	
GM	212+07.77	3.00	498.86	
GN	212+17.77	3.00	498.88	
GO	212+27.77	3.00	498.92	
GP	212+37.77	3.00	498.96	
GQ	212+47.77	3.00	499.01	
GR	212+57.77	3.00	499.07	
GS	212+67.77	3.00	499.14	
GT	212+77.77	3.00	499.22	
GU	212+87.77	3.00	499.30	
GV	212+97.77	3.00	499.40	
CL Brg. Pier 9	213+09.52	3.00	499.53	
HA	213+19.52	3.00	499.64	
HB	213+29.52	3.00	499.77	
HC	213+39.52	3.00	499.91	
HD	213+49.52	3.00	500.05	
HE	213+59.52	3.00	500.20	
HF	213+69.52	3.00	500.37	
HG	213+79.52	3.00	500.54	
HH	213+89.52	3.00	500.72	
HI	213+99.52	3.00	500.91	
HJ	214+09.52	3.00	501.11	
HK	214+19.52	3.00	501.32	
HL	214+29.52	3.00	501.52	
HM	214+39.52	3.00	501.73	
HN	214+49.52	3.00	501.93	
HO	214+59.52	3.00	502.14	
HP	214+69.52	3.00	502.34	
HQ	214+79.52	3.00	502.55	
HR	214+89.52	3.00	502.76	
HS	214+99.52	3.00	502.96	
HT	215+09.52	3.00	503.17	
CL W. Brg. Pier 10	215+17.02	3.00	503.32	
CL Pier 10 / Exp. Jt.	215+18.77	3.00	503.36	

Note A:
Theoretical Grade Elevations Adjusted for Dead Load Deflection and Grinding will be provided to the Contractor in accordance with the special provision "Contractor Requirements for Dead Load Deflection and Top of Slab Elevation Data."

MODEL: Default
FILE NAME: P:\4312-VBM\CLLugageRehab\CADD\Structural_SN 090-0115_WBMainBridge_Final Plans\0900115-68E44-033-TOSE-Spans 9-11_03.dgn

MODJESKI and MASTERS

USER NAME =	DESIGNED - YSS	REVISED -	
	CHECKED - JCH	REVISED -	
PLOT SCALE =	DRAWN - JJE	REVISED -	
PLOT DATE =	CHECKED - YSS	REVISED -	

STATE OF ILLINOIS
DEPARTMENT OF TRANSPORTATION

TOP OF SLAB ELEVATIONS - SPANS 9-11 - 3
STRUCTURE NO. 090-0115

SHEET S33 OF S214 SHEETS

F.A.P. RTE.	SECTION	COUNTY	TOTAL SHEETS	SHEET NO.
317	(15B-1)BP,BRR	PEO/TAZ	418	203

CONTRACT NO. 68E44

ILLINOIS | FED. AID PROJECT

3/13/2025 12:39:31 PM

GIRDER 2

Location	Station	Offset	Theoretical Grade Elevations	Theoretical Grade Elevations Adjusted For Dead Load Deflection and Grinding
CL E. Brg. Pier 7	208+69.77	12.00	498.63	
FA	208+79.77	12.00	498.63	
FB	208+89.77	12.00	498.64	
FC	208+99.77	12.00	498.64	
FD	209+09.77	12.00	498.64	
FE	209+19.77	12.00	498.64	
FF	209+29.77	12.00	498.64	
FG	209+39.77	12.00	498.65	
FH	209+49.77	12.00	498.65	See Note A
FI	209+59.77	12.00	498.65	
FJ	209+69.77	12.00	498.65	
FK	209+79.77	12.00	498.66	
FL	209+89.77	12.00	498.66	
FM	209+99.77	12.00	498.66	
FN	210+09.77	12.00	498.66	
FO	210+19.77	12.00	498.66	
FP	210+29.77	12.00	498.67	
FQ	210+39.77	12.00	498.67	
FR	210+49.77	12.00	498.67	
FS	210+59.77	12.00	498.67	
FT	210+69.77	12.00	498.67	
CL Brg. Pier 8	210+77.77	12.00	498.68	
GA	210+87.77	12.00	498.68	
GB	210+97.77	12.00	498.68	
GC	211+07.77	12.00	498.68	
GD	211+17.77	12.00	498.69	
GE	211+27.77	12.00	498.69	
GF	211+37.77	12.00	498.69	
GG	211+47.77	12.00	498.69	
GH	211+57.77	12.00	498.69	
GI	211+67.77	12.00	498.70	
GJ	211+77.77	12.00	498.70	
GK	211+87.77	12.00	498.70	
GL	211+97.77	12.00	498.71	
GM	212+07.77	12.00	498.72	
GN	212+17.77	12.00	498.74	
GO	212+27.77	12.00	498.78	
GP	212+37.77	12.00	498.82	
GQ	212+47.77	12.00	498.87	
GR	212+57.77	12.00	498.93	
GS	212+67.77	12.00	499.00	
GT	212+77.77	12.00	499.08	
GU	212+87.77	12.00	499.16	
GV	212+97.77	12.00	499.26	
CL Brg. Pier 9	213+09.52	12.00	499.39	
HA	213+19.52	12.00	499.50	
HB	213+29.52	12.00	499.63	
HC	213+39.52	12.00	499.77	
HD	213+49.52	12.00	499.91	
HE	213+59.52	12.00	500.06	
HF	213+69.52	12.00	500.23	
HG	213+79.52	12.00	500.40	
HH	213+89.52	12.00	500.58	
HI	213+99.52	12.00	500.77	
HJ	214+09.52	12.00	500.97	
HK	214+19.52	12.00	501.18	
HL	214+29.52	12.00	501.38	
HM	214+39.52	12.00	501.59	
HN	214+49.52	12.00	501.79	
HO	214+59.52	12.00	502.00	
HP	214+69.52	12.00	502.20	
HQ	214+79.52	12.00	502.41	
HR	214+89.52	12.00	502.62	
HS	214+99.52	12.00	502.82	
HT	215+09.52	12.00	503.03	
CL W. Brg. Pier 10	215+17.02	12.00	503.18	
CL Pier 10 / Exp. Jt.	215+18.77	12.00	503.22	

Note A:
Theoretical Grade Elevations Adjusted for Dead Load Deflection and Grinding will be provided to the Contractor in accordance with the special provision "Contractor Requirements for Dead Load Deflection and Top of Slab Elevation Data."

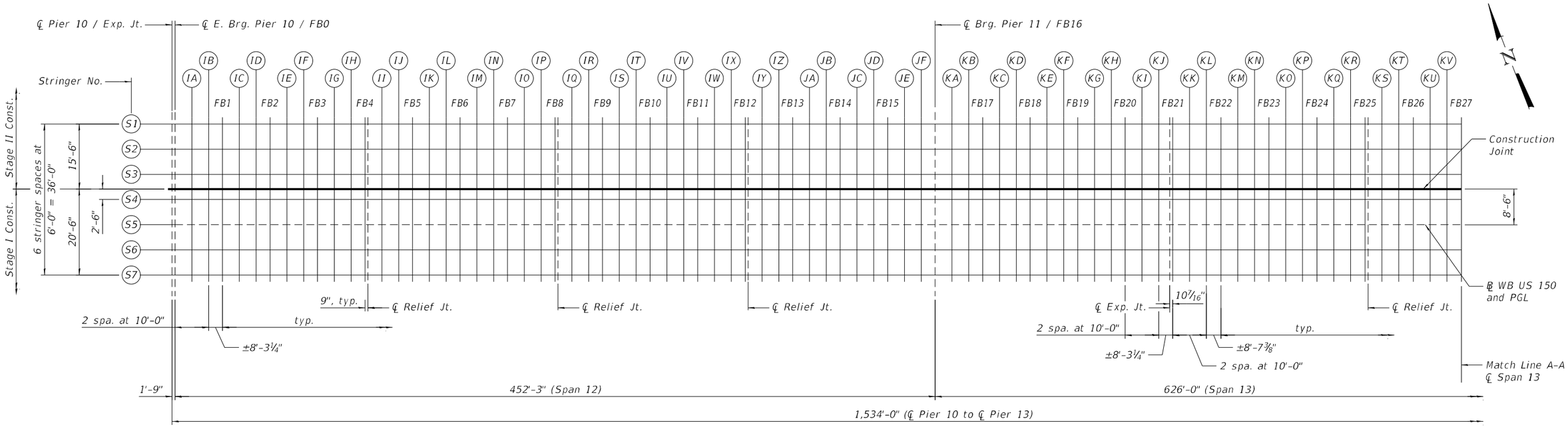

PLAN

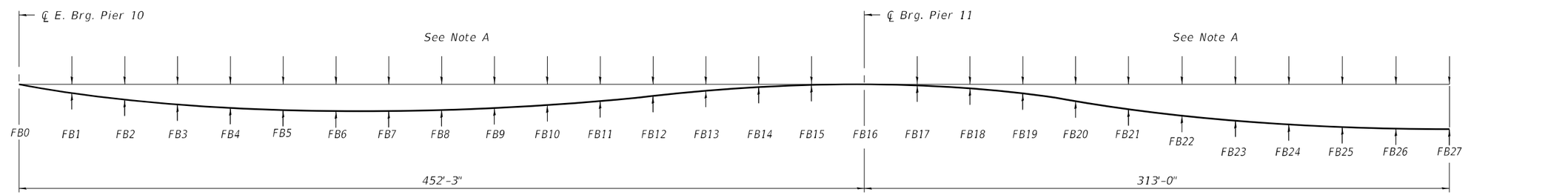

TRUSS
DEAD LOAD DEFLECTION DIAGRAM

Includes weight of concrete only.

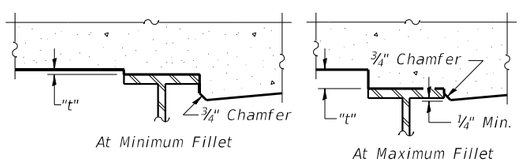

To determine "t": After all structural steel has been erected, elevations of the top flanges of the beams shall be taken at intervals shown on sheets S37 thru S44 of S214. These elevations subtracted from the "Theoretical Grade Elevations Adjusted for Dead Load Deflection and Grinding" shown on sheets S37 thru S44 of S214, minus the initial slab thickness prior to grinding, equals the fillet heights "t" above top flange of beams.

The slab is to be ground after curing to achieve smoothness, but the slab is not to be ground to elevations below the "Theoretical Grade Elevations" shown on sheets S37 thru S44 of S214. For grinding the deck, see Special Provisions.

FILLET HEIGHTS

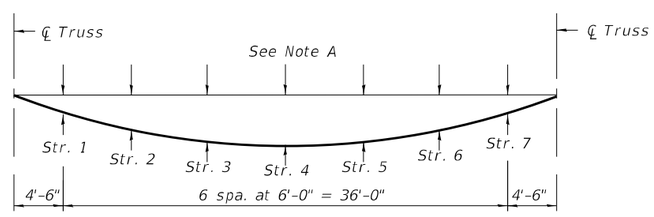

FLOORBEAM
DEAD LOAD DEFLECTION DIAGRAM

Includes weight of concrete only.

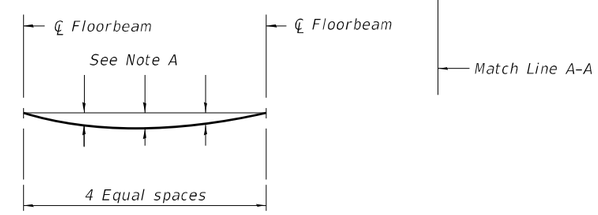

STRINGER
DEAD LOAD DEFLECTION DIAGRAM

Includes weight of concrete only.

Note:
The dead load deflections are not to be used in the field if the engineer is working from the grade elevations adjusted for dead load deflections and grinding as shown on sheets S37 thru S44 of S214.

Note A:
Dead load deflections will be provided to the Contractor in accordance with the special provision "Contractor Requirements for Dead Load Deflection and Top of Slab Elevation Data."

MODEL: PLOTSHEET-S12-S14_1
FILE NAME: P:\4312-WBRC\LugageRehab\CADD\Structural_SN 090-0115_WBMainBridge_Final Plans\0900115-68E44-035-TOSE-Spans 12-14_01.dgn

MODJESKI and MASTERS

USER NAME =	DESIGNED - YSS	REVISED -	
	CHECKED - JCH	REVISED -	
PLOT SCALE =	DRAWN - JJE	REVISED -	
PLOT DATE =	CHECKED - YSS	REVISED -	

STATE OF ILLINOIS
DEPARTMENT OF TRANSPORTATION

TOP OF SLAB ELEVATIONS - SPANS 12-14 - 1
STRUCTURE NO. 090-0115

SHEET S35 OF S214 SHEETS

F.A.P. RTE.	SECTION	COUNTY	TOTAL SHEETS	SHEET NO.
317	(15B-1)BP,BRR	PEO/TAZ	418	205
		CONTRACT NO. 68E44		
		ILLINOIS	FED. AID PROJECT	

3/13/2025 12:39:37 PM

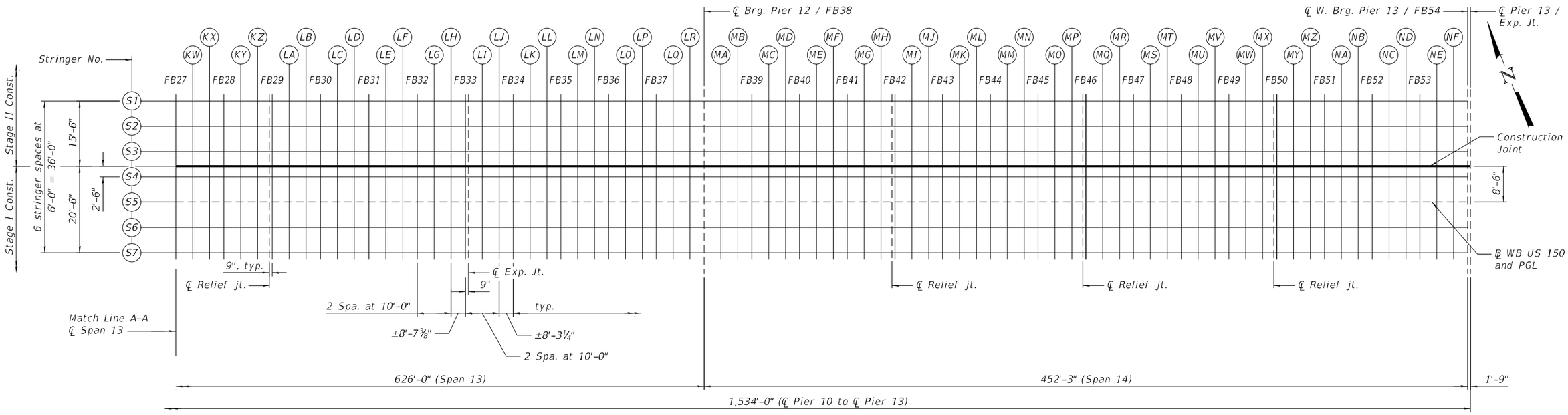

PLAN

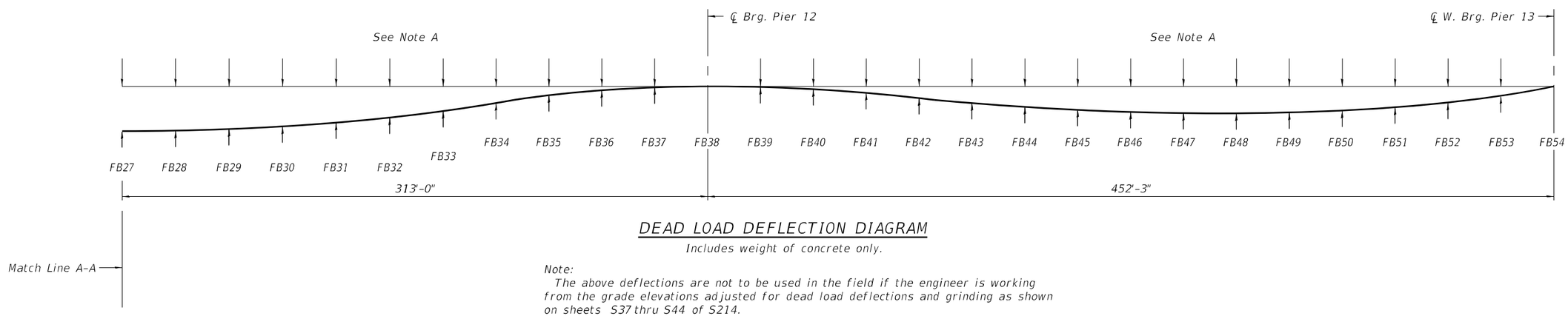

DEAD LOAD DEFLECTION DIAGRAM

Includes weight of concrete only.

Note:
The above deflections are not to be used in the field if the engineer is working from the grade elevations adjusted for dead load deflections and grinding as shown on sheets S37 thru S44 of S214.

Note A:
Dead load deflections will be provided to the Contractor in accordance with the special provision "Contractor Requirements for Dead Load Deflection and Top of Slab Elevation Data."

MODEL: PLOTSHEET-S12-S14_2
FILE NAME: P:\4312-WBMcCLugageRehab\CADD\Structural_SN 090-0115_WBMainBridge_Final Plans\09001115-68E44-036-TOSE-Spans 12-14_02.dgn

MODJESKI and MASTERS	USER NAME =	DESIGNED - YSS	REVISED -
		CHECKED - JCH	REVISED -
	PLOT SCALE =	DRAWN - JJE	REVISED -
	PLOT DATE =	CHECKED - YSS	REVISED -

STATE OF ILLINOIS
DEPARTMENT OF TRANSPORTATION

TOP OF SLAB ELEVATIONS - SPANS 12-14 - 2
STRUCTURE NO. 090-0115

SHEET S36 OF S214 SHEETS

F.A.P. RTE.	SECTION	COUNTY	TOTAL SHEETS	SHEET NO.
317	(15B-1)BP,BRR	PEO/TAZ	418	206
		CONTRACT NO. 68E44		
		ILLINOIS	FED. AID PROJECT	

3/13/2025 12:39:39 PM

STRINGER 1

Location	Station	Offset	Theoretical Grade Elevations	Theoretical Grade Elevations Adjusted For Dead Load Deflection and Grinding
CL E. Brg. Pier 10 / FB0	215+20.52	-24.00	503.02	
IA	215+30.52	-24.00	503.22	
IB	215+40.52	-24.00	503.43	
FB1	215+48.79	-24.00	503.60	
IC	215+58.79	-24.00	503.80	
ID	215+68.79	-24.00	504.01	
FB2	215+77.05	-24.00	504.18	See Note A
IE	215+87.05	-24.00	504.38	
IF	215+97.05	-24.00	504.59	
FB3	216+05.32	-24.00	504.76	
IG	216+15.32	-24.00	504.96	
IH	216+25.32	-24.00	505.17	
FB4	216+33.58	-24.00	505.34	
CL Relief Jt.	216+34.33	-24.00	505.35	
II	216+43.58	-24.00	505.54	
IJ	216+53.58	-24.00	505.75	
FB5	216+61.85	-24.00	505.92	
IK	216+71.85	-24.00	506.12	
IL	216+81.85	-24.00	506.33	
FB6	216+90.11	-24.00	506.50	
IM	217+00.11	-24.00	506.70	
IN	217+10.11	-24.00	506.91	
FB7	217+18.38	-24.00	507.08	
IO	217+28.38	-24.00	507.28	
IP	217+38.38	-24.00	507.49	
FB8	217+46.65	-24.00	507.66	
CL Relief Jt.	217+47.40	-24.00	507.67	
IQ	217+56.65	-24.00	507.86	
IR	217+66.65	-24.00	508.07	
FB9	217+74.91	-24.00	508.24	
IS	217+84.91	-24.00	508.44	
IT	217+94.91	-24.00	508.65	
FB10	218+03.18	-24.00	508.82	
IU	218+13.18	-24.00	509.02	
IV	218+23.18	-24.00	509.23	
FB11	218+31.44	-24.00	509.40	
IW	218+41.44	-24.00	509.60	
IX	218+51.44	-24.00	509.81	
FB12	218+59.71	-24.00	509.98	
CL Relief Jt.	218+60.46	-24.00	510.00	
IY	218+69.71	-24.00	510.18	
IZ	218+79.71	-24.00	510.39	
FB13	218+87.97	-24.00	510.55	
JA	218+97.97	-24.00	510.74	
JB	219+07.97	-24.00	510.93	
FB14	219+16.24	-24.00	511.08	
JC	219+26.24	-24.00	511.26	
JD	219+36.24	-24.00	511.43	
FB15	219+44.50	-24.00	511.57	
JE	219+54.50	-24.00	511.74	
JF	219+64.50	-24.00	511.90	

STRINGER 1 (Cont.)

Location	Station	Offset	Theoretical Grade Elevations	Theoretical Grade Elevations Adjusted For Dead Load Deflection and Grinding
CL Brg. Pier 11 / FB16	219+72.77	-24.00	512.03	
KA	219+82.77	-24.00	512.18	
KB	219+92.77	-24.00	512.33	
FB17	220+01.04	-24.00	512.44	
KC	220+11.04	-24.00	512.58	
KD	220+21.04	-24.00	512.71	
FB18	220+29.30	-24.00	512.82	See Note A
KE	220+39.30	-24.00	512.94	
KF	220+49.30	-24.00	513.06	
FB19	220+57.57	-24.00	513.15	
KG	220+67.57	-24.00	513.26	
KH	220+77.57	-24.00	513.37	
FB20	220+85.83	-24.00	513.45	
KI	220+95.83	-24.00	513.54	
KJ	221+05.83	-24.00	513.64	
CL Exp. Jt.	221+13.23	-24.00	513.70	
FB21	221+14.10	-24.00	513.71	
KK	221+24.10	-24.00	513.79	
KL	221+34.10	-24.00	513.86	
FB22	221+42.71	-24.00	513.93	
KM	221+52.71	-24.00	513.99	
KN	221+62.71	-24.00	514.06	
FB23	221+71.32	-24.00	514.11	
KO	221+81.32	-24.00	514.16	
KP	221+91.32	-24.00	514.21	
FB24	221+99.93	-24.00	514.25	
KQ	222+09.93	-24.00	514.29	
KR	222+19.93	-24.00	514.32	
FB25	222+28.55	-24.00	514.35	
CL Relief Jt.	222+29.30	-24.00	514.35	
KS	222+38.55	-24.00	514.37	
KT	222+48.55	-24.00	514.39	
FB26	222+57.16	-24.00	514.40	
KU	222+67.16	-24.00	514.42	
KV	222+77.16	-24.00	514.42	
FB27	222+85.77	-24.00	514.42	
KW	222+95.77	-24.00	514.42	
KX	223+05.77	-24.00	514.41	
FB28	223+14.38	-24.00	514.40	
KY	223+24.38	-24.00	514.39	
KZ	223+34.38	-24.00	514.36	
CL Relief Jt.	223+42.24	-24.00	514.34	
FB29	223+42.99	-24.00	514.34	
LA	223+52.99	-24.00	514.31	
LB	223+62.99	-24.00	514.27	
FB30	223+71.61	-24.00	514.24	
LC	223+81.61	-24.00	514.19	
LD	223+91.61	-24.00	514.14	
FB31	224+00.22	-24.00	514.10	
LE	224+10.22	-24.00	514.04	
LF	224+20.22	-24.00	513.97	
FB32	224+28.83	-24.00	513.91	
LG	224+38.83	-24.00	513.84	
LH	224+48.83	-24.00	513.76	
FB33	224+57.44	-24.00	513.69	
CL Exp. Jt.	224+58.19	-24.00	513.68	
LI	224+67.44	-24.00	513.60	
LJ	224+77.44	-24.00	513.51	
FB34	224+85.71	-24.00	513.43	
LK	224+95.71	-24.00	513.33	
LL	225+05.71	-24.00	513.22	
FB35	225+13.97	-24.00	513.13	
LM	225+23.97	-24.00	513.02	
LN	225+33.97	-24.00	512.90	
FB36	225+42.24	-24.00	512.79	
LO	225+52.24	-24.00	512.67	
LP	225+62.24	-24.00	512.53	
FB37	225+70.50	-24.00	512.42	
LQ	225+80.50	-24.00	512.27	
LR	225+90.50	-24.00	512.13	

STRINGER 1 (Cont.)

Location	Station	Offset	Theoretical Grade Elevations	Theoretical Grade Elevations Adjusted For Dead Load Deflection and Grinding
CL Brg. Pier 12 / FB38	225+98.77	-24.00	512.00	
MA	226+08.77	-24.00	511.84	
MB	226+18.77	-24.00	511.68	
FB39	226+27.04	-24.00	511.54	
MC	226+37.04	-24.00	511.37	
MD	226+47.04	-24.00	511.20	
FB40	226+55.30	-24.00	511.05	See Note A
ME	226+65.30	-24.00	510.86	
MF	226+75.30	-24.00	510.68	
FB41	226+83.57	-24.00	510.51	
MG	226+93.57	-24.00	510.32	
MH	227+03.57	-24.00	510.11	
CL Relief Jt.	227+11.08	-24.00	509.96	
FB42	227+11.83	-24.00	509.94	
MI	227+21.83	-24.00	509.74	
MJ	227+31.83	-24.00	509.53	
FB43	227+40.10	-24.00	509.36	
MK	227+50.10	-24.00	509.16	
ML	227+60.10	-24.00	508.95	
FB44	227+68.36	-24.00	508.78	
MM	227+78.36	-24.00	508.58	
MN	227+88.36	-24.00	508.37	
FB45	227+96.63	-24.00	508.20	
MO	228+06.63	-24.00	508.00	
MP	228+16.63	-24.00	507.79	
CL Relief Jt.	228+24.15	-24.00	507.64	
FB46	228+24.90	-24.00	507.62	
MQ	228+34.90	-24.00	507.42	
MR	228+44.90	-24.00	507.21	
FB47	228+53.16	-24.00	507.04	
MS	228+63.16	-24.00	506.83	
MT	228+73.16	-24.00	506.63	
FB48	228+81.43	-24.00	506.46	
MU	228+91.43	-24.00	506.25	
MV	229+01.43	-24.00	506.05	
FB49	229+09.69	-24.00	505.88	
MW	229+19.69	-24.00	505.67	
MX	229+29.69	-24.00	505.47	
CL Relief Jt.	229+37.21	-24.00	505.31	
FB50	229+37.96	-24.00	505.30	
MY	229+47.96	-24.00	505.09	
MZ	229+57.96	-24.00	504.89	
FB51	229+66.22	-24.00	504.72	
NA	229+76.22	-24.00	504.51	
NB	229+86.22	-24.00	504.31	
FB52	229+94.49	-24.00	504.14	
NC	230+04.49	-24.00	503.93	
ND	230+14.49	-24.00	503.73	
FB53	230+22.75	-24.00	503.56	
NE	230+32.75	-24.00	503.35	
NF	230+42.75	-24.00	503.15	
CL W. Brg. Pier 13 / FB54	230+51.02	-24.00	502.98	
CL Pier 13 / Exp. Jt.	230+52.77	-24.00	502.94	

Note A:
Theoretical Grade Elevations Adjusted for Dead Load Deflection and Grinding will be provided to the Contractor in accordance with the special provision "Contractor Requirements for Dead Load Deflection and Top of Slab Elevation Data."

MODEL: Default
FILE NAME: P:\4312-WBKcLugageRehab\CADD\Structural_SN 090-0115_WBMainBridge_Final Plans\0900115-68E44-037-TOSE-Spans 12-14_03.dgn

MODJESKI and MASTERS

USER NAME =	DESIGNED - YSS	REVISED -
	CHECKED - JCH	REVISED -
PLOT SCALE =	DRAWN - JJE	REVISED -
PLOT DATE =	CHECKED - YSS	REVISED -

STATE OF ILLINOIS
DEPARTMENT OF TRANSPORTATION

TOP OF SLAB ELEVATIONS - SPANS 12-14 - 3
STRUCTURE NO. 090-0115

SHEET S37 OF S214 SHEETS

F.A.P. RTE.	SECTION	COUNTY	TOTAL SHEETS	SHEET NO.
317	(15B-1)BP,BRR	PEO/TAZ	418	207
		CONTRACT NO. 68E44		
	ILLINOIS	FED. AID PROJECT		

3/13/2025 12:39:41 PM

STRINGER 2

Location	Station	Offset	Theoretical Grade Elevations	Theoretical Grade Elevations Adjusted For Dead Load Deflection and Grinding
CL E. Brg. Pier 10 / FB0	215+20.52	-18.00	503.14	
IA	215+30.52	-18.00	503.34	
IB	215+40.52	-18.00	503.55	
FB1	215+48.79	-18.00	503.72	
IC	215+58.79	-18.00	503.92	
ID	215+68.79	-18.00	504.13	See Note A
FB2	215+77.05	-18.00	504.30	
IE	215+87.05	-18.00	504.50	
IF	215+97.05	-18.00	504.71	
FB3	216+05.32	-18.00	504.88	
IG	216+15.32	-18.00	505.08	
IH	216+25.32	-18.00	505.29	
FB4	216+33.58	-18.00	505.46	
CL Relief Jt.	216+34.33	-18.00	505.47	
II	216+43.58	-18.00	505.66	
IJ	216+53.58	-18.00	505.87	
FB5	216+61.85	-18.00	506.04	
IK	216+71.85	-18.00	506.24	
IL	216+81.85	-18.00	506.45	
FB6	216+90.11	-18.00	506.62	
IM	217+00.11	-18.00	506.82	
IN	217+10.11	-18.00	507.03	
FB7	217+18.38	-18.00	507.20	
IO	217+28.38	-18.00	507.40	
IP	217+38.38	-18.00	507.61	
FB8	217+46.65	-18.00	507.78	
CL Relief Jt.	217+47.40	-18.00	507.79	
IQ	217+56.65	-18.00	507.98	
IR	217+66.65	-18.00	508.19	
FB9	217+74.91	-18.00	508.36	
IS	217+84.91	-18.00	508.56	
IT	217+94.91	-18.00	508.77	
FB10	218+03.18	-18.00	508.94	
IU	218+13.18	-18.00	509.14	
IV	218+23.18	-18.00	509.35	
FB11	218+31.44	-18.00	509.52	
IW	218+41.44	-18.00	509.72	
IX	218+51.44	-18.00	509.93	
FB12	218+59.71	-18.00	510.10	
CL Relief Jt.	218+60.46	-18.00	510.12	
IY	218+69.71	-18.00	510.30	
IZ	218+79.71	-18.00	510.51	
FB13	218+87.97	-18.00	510.67	
JA	218+97.97	-18.00	510.86	
JB	219+07.97	-18.00	511.05	
FB14	219+16.24	-18.00	511.20	
JC	219+26.24	-18.00	511.38	
JD	219+36.24	-18.00	511.55	
FB15	219+44.50	-18.00	511.69	
JE	219+54.50	-18.00	511.86	
JF	219+64.50	-18.00	512.02	

STRINGER 2 (Cont.)

Location	Station	Offset	Theoretical Grade Elevations	Theoretical Grade Elevations Adjusted For Dead Load Deflection and Grinding
CL Brg. Pier 11 / FB16	219+72.77	-18.00	512.15	
KA	219+82.77	-18.00	512.30	
KB	219+92.77	-18.00	512.45	
FB17	220+01.04	-18.00	512.56	
KC	220+11.04	-18.00	512.70	
KD	220+21.04	-18.00	512.83	
FB18	220+29.30	-18.00	512.94	See Note A
KE	220+39.30	-18.00	513.06	
KF	220+49.30	-18.00	513.18	
FB19	220+57.57	-18.00	513.27	
KG	220+67.57	-18.00	513.38	
KH	220+77.57	-18.00	513.49	
FB20	220+85.83	-18.00	513.57	
KI	220+95.83	-18.00	513.66	
KJ	221+05.83	-18.00	513.76	
CL Exp. Jt.	221+13.23	-18.00	513.82	
FB21	221+14.10	-18.00	513.83	
KK	221+24.10	-18.00	513.91	
KL	221+34.10	-18.00	513.98	
FB22	221+42.71	-18.00	514.05	
KM	221+52.71	-18.00	514.11	
KN	221+62.71	-18.00	514.18	
FB23	221+71.32	-18.00	514.23	
KO	221+81.32	-18.00	514.28	
KP	221+91.32	-18.00	514.33	
FB24	221+99.93	-18.00	514.37	
KQ	222+09.93	-18.00	514.41	
KR	222+19.93	-18.00	514.44	
FB25	222+28.55	-18.00	514.47	
CL Relief Jt.	222+29.30	-18.00	514.47	
KS	222+38.55	-18.00	514.49	
KT	222+48.55	-18.00	514.51	
FB26	222+57.16	-18.00	514.52	
KU	222+67.16	-18.00	514.54	
KV	222+77.16	-18.00	514.54	
FB27	222+85.77	-18.00	514.54	
KW	222+95.77	-18.00	514.54	
KX	223+05.77	-18.00	514.53	
FB28	223+14.38	-18.00	514.52	
KY	223+24.38	-18.00	514.51	
KZ	223+34.38	-18.00	514.48	
CL Relief Jt.	223+42.24	-18.00	514.46	
FB29	223+42.99	-18.00	514.46	
LA	223+52.99	-18.00	514.43	
LB	223+62.99	-18.00	514.39	
FB30	223+71.61	-18.00	514.36	
LC	223+81.61	-18.00	514.31	
LD	223+91.61	-18.00	514.26	
FB31	224+00.22	-18.00	514.22	
LE	224+10.22	-18.00	514.16	
LF	224+20.22	-18.00	514.09	
FB32	224+28.83	-18.00	514.03	
LG	224+38.83	-18.00	513.96	
LH	224+48.83	-18.00	513.88	
FB33	224+57.44	-18.00	513.81	
CL Exp. Jt.	224+58.19	-18.00	513.80	
LI	224+67.44	-18.00	513.72	
LJ	224+77.44	-18.00	513.63	
FB34	224+85.71	-18.00	513.55	
LK	224+95.71	-18.00	513.45	
LL	225+05.71	-18.00	513.34	
FB35	225+13.97	-18.00	513.25	
LM	225+23.97	-18.00	513.14	
LN	225+33.97	-18.00	513.02	
FB36	225+42.24	-18.00	512.91	
LO	225+52.24	-18.00	512.79	
LP	225+62.24	-18.00	512.65	
FB37	225+70.50	-18.00	512.54	
LQ	225+80.50	-18.00	512.39	
LR	225+90.50	-18.00	512.25	

STRINGER 2 (Cont.)

Location	Station	Offset	Theoretical Grade Elevations	Theoretical Grade Elevations Adjusted For Dead Load Deflection and Grinding
CL Brg. Pier 12 / FB38	225+98.77	-18.00	512.12	
MA	226+08.77	-18.00	511.96	
MB	226+18.77	-18.00	511.80	
FB39	226+27.04	-18.00	511.66	
MC	226+37.04	-18.00	511.49	
MD	226+47.04	-18.00	511.32	
FB40	226+55.30	-18.00	511.17	See Note A
ME	226+65.30	-18.00	510.98	
MF	226+75.30	-18.00	510.80	
FB41	226+83.57	-18.00	510.63	
MG	226+93.57	-18.00	510.44	
MH	227+03.57	-18.00	510.23	
CL Relief Jt.	227+11.08	-18.00	510.08	
FB42	227+11.83	-18.00	510.06	
MI	227+21.83	-18.00	509.86	
MJ	227+31.83	-18.00	509.65	
FB43	227+40.10	-18.00	509.48	
MK	227+50.10	-18.00	509.28	
ML	227+60.10	-18.00	509.07	
FB44	227+68.36	-18.00	508.90	
MM	227+78.36	-18.00	508.70	
MN	227+88.36	-18.00	508.49	
FB45	227+96.63	-18.00	508.32	
MO	228+06.63	-18.00	508.12	
MP	228+16.63	-18.00	507.91	
CL Relief Jt.	228+24.15	-18.00	507.76	
FB46	228+24.90	-18.00	507.74	
MQ	228+34.90	-18.00	507.54	
MR	228+44.90	-18.00	507.33	
FB47	228+53.16	-18.00	507.16	
MS	228+63.16	-18.00	506.95	
MT	228+73.16	-18.00	506.75	
FB48	228+81.43	-18.00	506.58	
MU	228+91.43	-18.00	506.37	
MV	229+01.43	-18.00	506.17	
FB49	229+09.69	-18.00	506.00	
MW	229+19.69	-18.00	505.79	
MX	229+29.69	-18.00	505.59	
CL Relief Jt.	229+37.21	-18.00	505.43	
FB50	229+37.96	-18.00	505.42	
MY	229+47.96	-18.00	505.21	
MZ	229+57.96	-18.00	505.01	
FB51	229+66.22	-18.00	504.84	
NA	229+76.22	-18.00	504.63	
NB	229+86.22	-18.00	504.43	
FB52	229+94.49	-18.00	504.26	
NC	230+04.49	-18.00	504.05	
ND	230+14.49	-18.00	503.85	
FB53	230+22.75	-18.00	503.68	
NE	230+32.75	-18.00	503.47	
NF	230+42.75	-18.00	503.27	
CL W. Brg. Pier 13 / FB54	230+51.02	-18.00	503.10	
CL Pier 13 / Exp. Jt.	230+52.77	-18.00	503.06	

Note A:
Theoretical Grade Elevations Adjusted for Dead Load Deflection and Grinding will be provided to the Contractor in accordance with the special provision "Contractor Requirements for Dead Load Deflection and Top of Slab Elevation Data."

MODEL: Default
FILE NAME: P:\4312-WBRKCLugageRehab\CADD\Structural_SN 090-0115_WBMainBridge_Final Plans\0900115-68E44-038-TOSE-Spans 12-14_04.dgn

MODJESKI and MASTERS

USER NAME =	DESIGNED - YSS	REVISED -
	CHECKED - JCH	REVISED -
PLOT SCALE =	DRAWN - JJE	REVISED -
PLOT DATE =	CHECKED - YSS	REVISED -

STATE OF ILLINOIS
DEPARTMENT OF TRANSPORTATION

TOP OF SLAB ELEVATIONS - SPANS 12-14 - 4
STRUCTURE NO. 090-0115

SHEET S38 OF S214 SHEETS

F.A.P. RTE.	SECTION	COUNTY	TOTAL SHEETS	SHEET NO.
317	(15B-1)BP,BRR	PEO/TAZ	418	208
		CONTRACT NO. 68E44		
	ILLINOIS	FED. AID PROJECT		

3/13/2025 12:39:45 PM

STRINGER 3

Location	Station	Offset	Theoretical Grade Elevations	Theoretical Grade Elevations Adjusted For Dead Load Deflection and Grinding
CL E. Brg. Pier 10 / FB0	215+20.52	-12.00	503.26	
IA	215+30.52	-12.00	503.46	
IB	215+40.52	-12.00	503.67	
FB1	215+48.79	-12.00	503.84	
IC	215+58.79	-12.00	504.04	
ID	215+68.79	-12.00	504.25	
FB2	215+77.05	-12.00	504.42	See Note A
IE	215+87.05	-12.00	504.62	
IF	215+97.05	-12.00	504.83	
FB3	216+05.32	-12.00	505.00	
IG	216+15.32	-12.00	505.20	
IH	216+25.32	-12.00	505.41	
FB4	216+33.58	-12.00	505.58	
CL Relief Jt.	216+34.33	-12.00	505.59	
II	216+43.58	-12.00	505.78	
IJ	216+53.58	-12.00	505.99	
FB5	216+61.85	-12.00	506.16	
IK	216+71.85	-12.00	506.36	
IL	216+81.85	-12.00	506.57	
FB6	216+90.11	-12.00	506.74	
IM	217+00.11	-12.00	506.94	
IN	217+10.11	-12.00	507.15	
FB7	217+18.38	-12.00	507.32	
IO	217+28.38	-12.00	507.52	
IP	217+38.38	-12.00	507.73	
FB8	217+46.65	-12.00	507.90	
CL Relief Jt.	217+47.40	-12.00	507.91	
IQ	217+56.65	-12.00	508.10	
IR	217+66.65	-12.00	508.31	
FB9	217+74.91	-12.00	508.48	
IS	217+84.91	-12.00	508.68	
IT	217+94.91	-12.00	508.89	
FB10	218+03.18	-12.00	509.06	
IU	218+13.18	-12.00	509.26	
IV	218+23.18	-12.00	509.47	
FB11	218+31.44	-12.00	509.64	
IW	218+41.44	-12.00	509.84	
IX	218+51.44	-12.00	510.05	
FB12	218+59.71	-12.00	510.22	
CL Relief Jt.	218+60.46	-12.00	510.24	
IY	218+69.71	-12.00	510.42	
IZ	218+79.71	-12.00	510.63	
FB13	218+87.97	-12.00	510.79	
JA	218+97.97	-12.00	510.98	
JB	219+07.97	-12.00	511.17	
FB14	219+16.24	-12.00	511.32	
JC	219+26.24	-12.00	511.50	
JD	219+36.24	-12.00	511.67	
FB15	219+44.50	-12.00	511.81	
JE	219+54.50	-12.00	511.98	
JF	219+64.50	-12.00	512.14	

STRINGER 3 (Cont.)

Location	Station	Offset	Theoretical Grade Elevations	Theoretical Grade Elevations Adjusted For Dead Load Deflection and Grinding
CL Brg. Pier 11 / FB16	219+72.77	-12.00	512.27	
KA	219+82.77	-12.00	512.42	
KB	219+92.77	-12.00	512.57	
FB17	220+01.04	-12.00	512.68	
KC	220+11.04	-12.00	512.82	
KD	220+21.04	-12.00	512.95	
FB18	220+29.30	-12.00	513.06	See Note A
KE	220+39.30	-12.00	513.18	
KF	220+49.30	-12.00	513.30	
FB19	220+57.57	-12.00	513.39	
KG	220+67.57	-12.00	513.50	
KH	220+77.57	-12.00	513.61	
FB20	220+85.83	-12.00	513.69	
KI	220+95.83	-12.00	513.78	
KJ	221+05.83	-12.00	513.88	
CL Exp. Jt.	221+13.23	-12.00	513.94	
FB21	221+14.10	-12.00	513.95	
KK	221+24.10	-12.00	514.03	
KL	221+34.10	-12.00	514.10	
FB22	221+42.71	-12.00	514.17	
KM	221+52.71	-12.00	514.23	
KN	221+62.71	-12.00	514.30	
FB23	221+71.32	-12.00	514.35	
KO	221+81.32	-12.00	514.40	
KP	221+91.32	-12.00	514.45	
FB24	221+99.93	-12.00	514.49	
KQ	222+09.93	-12.00	514.53	
KR	222+19.93	-12.00	514.56	
FB25	222+28.55	-12.00	514.59	
CL Relief Jt.	222+29.30	-12.00	514.59	
KS	222+38.55	-12.00	514.61	
KT	222+48.55	-12.00	514.63	
FB26	222+57.16	-12.00	514.64	
KU	222+67.16	-12.00	514.66	
KV	222+77.16	-12.00	514.66	
FB27	222+85.77	-12.00	514.66	
KW	222+95.77	-12.00	514.66	
KX	223+05.77	-12.00	514.65	
FB28	223+14.38	-12.00	514.64	
KY	223+24.38	-12.00	514.63	
KZ	223+34.38	-12.00	514.60	
CL Relief Jt.	223+42.24	-12.00	514.58	
FB29	223+42.99	-12.00	514.58	
LA	223+52.99	-12.00	514.55	
LB	223+62.99	-12.00	514.51	
FB30	223+71.61	-12.00	514.48	
LC	223+81.61	-12.00	514.43	
LD	223+91.61	-12.00	514.38	
FB31	224+00.22	-12.00	514.34	
LE	224+10.22	-12.00	514.28	
LF	224+20.22	-12.00	514.21	
FB32	224+28.83	-12.00	514.15	
LG	224+38.83	-12.00	514.08	
LH	224+48.83	-12.00	514.00	
FB33	224+57.44	-12.00	513.93	
CL Exp. Jt.	224+58.19	-12.00	513.92	
LI	224+67.44	-12.00	513.84	
LJ	224+77.44	-12.00	513.75	
FB34	224+85.71	-12.00	513.67	
LK	224+95.71	-12.00	513.57	
LL	225+05.71	-12.00	513.46	
FB35	225+13.97	-12.00	513.37	
LM	225+23.97	-12.00	513.26	
LN	225+33.97	-12.00	513.14	
FB36	225+42.24	-12.00	513.03	
LO	225+52.24	-12.00	512.91	
LP	225+62.24	-12.00	512.77	
FB37	225+70.50	-12.00	512.66	
LQ	225+80.50	-12.00	512.51	
LR	225+90.50	-12.00	512.37	

STRINGER 3 (Cont.)

Location	Station	Offset	Theoretical Grade Elevations	Theoretical Grade Elevations Adjusted For Dead Load Deflection and Grinding
CL Brg. Pier 12 / FB38	225+98.77	-12.00	512.24	
MA	226+08.77	-12.00	512.08	
MB	226+18.77	-12.00	511.92	
FB39	226+27.04	-12.00	511.78	
MC	226+37.04	-12.00	511.61	
MD	226+47.04	-12.00	511.44	
FB40	226+55.30	-12.00	511.29	See Note A
ME	226+65.30	-12.00	511.10	
MF	226+75.30	-12.00	510.92	
FB41	226+83.57	-12.00	510.75	
MG	226+93.57	-12.00	510.56	
MH	227+03.57	-12.00	510.35	
CL Relief Jt.	227+11.08	-12.00	510.20	
FB42	227+11.83	-12.00	510.18	
MI	227+21.83	-12.00	509.98	
MJ	227+31.83	-12.00	509.77	
FB43	227+40.10	-12.00	509.60	
MK	227+50.10	-12.00	509.40	
ML	227+60.10	-12.00	509.19	
FB44	227+68.36	-12.00	509.02	
MM	227+78.36	-12.00	508.82	
MN	227+88.36	-12.00	508.61	
FB45	227+96.63	-12.00	508.44	
MO	228+06.63	-12.00	508.24	
MP	228+16.63	-12.00	508.03	
CL Relief Jt.	228+24.15	-12.00	507.88	
FB46	228+24.90	-12.00	507.86	
MQ	228+34.90	-12.00	507.66	
MR	228+44.90	-12.00	507.45	
FB47	228+53.16	-12.00	507.28	
MS	228+63.16	-12.00	507.07	
MT	228+73.16	-12.00	506.87	
FB48	228+81.43	-12.00	506.70	
MU	228+91.43	-12.00	506.49	
MV	229+01.43	-12.00	506.29	
FB49	229+09.69	-12.00	506.12	
MW	229+19.69	-12.00	505.91	
MX	229+29.69	-12.00	505.71	
CL Relief Jt.	229+37.21	-12.00	505.55	
FB50	229+37.96	-12.00	505.54	
MY	229+47.96	-12.00	505.33	
MZ	229+57.96	-12.00	505.13	
FB51	229+66.22	-12.00	504.96	
NA	229+76.22	-12.00	504.75	
NB	229+86.22	-12.00	504.55	
FB52	229+94.49	-12.00	504.38	
NC	230+04.49	-12.00	504.17	
ND	230+14.49	-12.00	503.97	
FB53	230+22.75	-12.00	503.80	
NE	230+32.75	-12.00	503.59	
NF	230+42.75	-12.00	503.39	
CL W. Brg. Pier 13 / FB54	230+51.02	-12.00	503.22	
CL Pier 13 / Exp. Jt.	230+52.77	-12.00	503.18	

Note A:
Theoretical Grade Elevations Adjusted for Dead Load Deflection and Grinding will be provided to the Contractor in accordance with the special provision "Contractor Requirements for Dead Load Deflection and Top of Slab Elevation Data."

MODEL: Default
FILE NAME: P:\4312-WBRrCLugageRehab\CADD\Structural_SN 090-0115_WBMainBridge_Final Plans\0900115-68E44-039-TOSE-Spans 12-14_05.dgn

MODJESKI and MASTERS

USER NAME =	DESIGNED - YSS	REVISED -	
	CHECKED - JCH	REVISED -	
PLOT SCALE =	DRAWN - JJE	REVISED -	
PLOT DATE =	CHECKED - YSS	REVISED -	

STATE OF ILLINOIS
DEPARTMENT OF TRANSPORTATION

TOP OF SLAB ELEVATIONS - SPANS 12-14 - 5
STRUCTURE NO. 090-0115

SHEET S39 OF S214 SHEETS

F.A.P. RTE.	SECTION	COUNTY	TOTAL SHEETS	SHEET NO.
317	(15B-1)BP,BRR	PEO/TAZ	418	209
		CONTRACT NO. 68E44		
	ILLINOIS	FED. AID PROJECT		

3/13/2025 12:39:48 PM

CONSTRUCTION JOINT

Location	Station	Offset	Theoretical Grade Elevations	Theoretical Grade Elevations Adjusted For Dead Load Deflection and Grinding
CL E. Brg. Pier 10 / FB0	215+20.52	-8.50	503.31	
IA	215+30.52	-8.50	503.51	
IB	215+40.52	-8.50	503.72	
FB1	215+48.79	-8.50	503.89	
IC	215+58.79	-8.50	504.09	See Note A
ID	215+68.79	-8.50	504.30	
FB2	215+77.05	-8.50	504.47	
IE	215+87.05	-8.50	504.68	
IF	215+97.05	-8.50	504.88	
FB3	216+05.32	-8.50	505.05	
IG	216+15.32	-8.50	505.26	
IH	216+25.32	-8.50	505.46	
FB4	216+33.58	-8.50	505.63	
CL Relief Jt.	216+34.33	-8.50	505.65	
II	216+43.58	-8.50	505.84	
IJ	216+53.58	-8.50	506.04	
FB5	216+61.85	-8.50	506.21	
IK	216+71.85	-8.50	506.42	
IL	216+81.85	-8.50	506.62	
FB6	216+90.11	-8.50	506.79	
IM	217+00.11	-8.50	507.00	
IN	217+10.11	-8.50	507.20	
FB7	217+18.38	-8.50	507.37	
IO	217+28.38	-8.50	507.58	
IP	217+38.38	-8.50	507.78	
FB8	217+46.65	-8.50	507.95	
CL Relief Jt.	217+47.40	-8.50	507.97	
IQ	217+56.65	-8.50	508.16	
IR	217+66.65	-8.50	508.36	
FB9	217+74.91	-8.50	508.53	
IS	217+84.91	-8.50	508.74	
IT	217+94.91	-8.50	508.94	
FB10	218+03.18	-8.50	509.11	
IU	218+13.18	-8.50	509.32	
IV	218+23.18	-8.50	509.52	
FB11	218+31.44	-8.50	509.69	
IW	218+41.44	-8.50	509.90	
IX	218+51.44	-8.50	510.10	
FB12	218+59.71	-8.50	510.27	
CL Relief Jt.	218+60.46	-8.50	510.29	
IY	218+69.71	-8.50	510.48	
IZ	218+79.71	-8.50	510.68	
FB13	218+87.97	-8.50	510.84	
JA	218+97.97	-8.50	511.03	
JB	219+07.97	-8.50	511.22	
FB14	219+16.24	-8.50	511.37	
JC	219+26.24	-8.50	511.55	
JD	219+36.24	-8.50	511.73	
FB15	219+44.50	-8.50	511.87	
JE	219+54.50	-8.50	512.03	
JF	219+64.50	-8.50	512.19	

CONSTRUCTION JOINT (Cont.)

Location	Station	Offset	Theoretical Grade Elevations	Theoretical Grade Elevations Adjusted For Dead Load Deflection and Grinding
CL Brg. Pier 11 / FB16	219+72.77	-8.50	512.32	
KA	219+82.77	-8.50	512.47	
KB	219+92.77	-8.50	512.62	
FB17	220+01.04	-8.50	512.73	See Note A
KC	220+11.04	-8.50	512.87	
KD	220+21.04	-8.50	513.00	
FB18	220+29.30	-8.50	513.11	
KE	220+39.30	-8.50	513.23	
KF	220+49.30	-8.50	513.35	
FB19	220+57.57	-8.50	513.45	
KG	220+67.57	-8.50	513.55	
KH	220+77.57	-8.50	513.66	
FB20	220+85.83	-8.50	513.74	
KI	220+95.83	-8.50	513.84	
KJ	221+05.83	-8.50	513.93	
CL Exp. Jt.	221+13.23	-8.50	513.99	
FB21	221+14.10	-8.50	514.00	
KK	221+24.10	-8.50	514.08	
KL	221+34.10	-8.50	514.16	
FB22	221+42.71	-8.50	514.22	
KM	221+52.71	-8.50	514.29	
KN	221+62.71	-8.50	514.35	
FB23	221+71.32	-8.50	514.40	
KO	221+81.32	-8.50	514.45	
KP	221+91.32	-8.50	514.50	
FB24	221+99.93	-8.50	514.54	
KQ	222+09.93	-8.50	514.58	
KR	222+19.93	-8.50	514.61	
FB25	222+28.55	-8.50	514.64	
CL Relief Jt.	222+29.30	-8.50	514.64	
KS	222+38.55	-8.50	514.66	
KT	222+48.55	-8.50	514.68	
FB26	222+57.16	-8.50	514.70	
KU	222+67.16	-8.50	514.71	
KV	222+77.16	-8.50	514.71	
FB27	222+85.77	-8.50	514.72	
KW	222+95.77	-8.50	514.71	
KX	223+05.77	-8.50	514.71	
FB28	223+14.38	-8.50	514.69	
KY	223+24.38	-8.50	514.68	
KZ	223+34.38	-8.50	514.66	
CL Relief Jt.	223+42.24	-8.50	514.64	
FB29	223+42.99	-8.50	514.63	
LA	223+52.99	-8.50	514.60	
LB	223+62.99	-8.50	514.57	
FB30	223+71.61	-8.50	514.53	
LC	223+81.61	-8.50	514.49	
LD	223+91.61	-8.50	514.44	
FB31	224+00.22	-8.50	514.39	
LE	224+10.22	-8.50	514.33	
LF	224+20.22	-8.50	514.27	
FB32	224+28.83	-8.50	514.21	
LG	224+38.83	-8.50	514.13	
LH	224+48.83	-8.50	514.05	
FB33	224+57.44	-8.50	513.98	
CL Exp. Jt.	224+58.19	-8.50	513.98	
LI	224+67.44	-8.50	513.90	
LJ	224+77.44	-8.50	513.80	
FB34	224+85.71	-8.50	513.72	
LK	224+95.71	-8.50	513.62	
LL	225+05.71	-8.50	513.52	
FB35	225+13.97	-8.50	513.43	
LM	225+23.97	-8.50	513.31	
LN	225+33.97	-8.50	513.19	
FB36	225+42.24	-8.50	513.09	
LO	225+52.24	-8.50	512.96	
LP	225+62.24	-8.50	512.82	
FB37	225+70.50	-8.50	512.71	
LQ	225+80.50	-8.50	512.57	
LR	225+90.50	-8.50	512.42	

CONSTRUCTION JOINT (Cont.)

Location	Station	Offset	Theoretical Grade Elevations	Theoretical Grade Elevations Adjusted For Dead Load Deflection and Grinding
CL Brg. Pier 12 / FB38	225+98.77	-8.50	512.29	
MA	226+08.77	-8.50	512.14	
MB	226+18.77	-8.50	511.97	
FB39	226+27.04	-8.50	511.84	
MC	226+37.04	-8.50	511.67	See Note A
MD	226+47.04	-8.50	511.49	
FB40	226+55.30	-8.50	511.34	
ME	226+65.30	-8.50	511.16	
MF	226+75.30	-8.50	510.97	
FB41	226+83.57	-8.50	510.81	
MG	226+93.57	-8.50	510.61	
MH	227+03.57	-8.50	510.41	
CL Relief Jt.	227+11.08	-8.50	510.25	
FB42	227+11.83	-8.50	510.24	
MI	227+21.83	-8.50	510.03	
MJ	227+31.83	-8.50	509.82	
FB43	227+40.10	-8.50	509.65	
MK	227+50.10	-8.50	509.45	
ML	227+60.10	-8.50	509.24	
FB44	227+68.36	-8.50	509.07	
MM	227+78.36	-8.50	508.87	
MN	227+88.36	-8.50	508.66	
FB45	227+96.63	-8.50	508.49	
MO	228+06.63	-8.50	508.29	
MP	228+16.63	-8.50	508.08	
CL Relief Jt.	228+24.15	-8.50	507.93	
FB46	228+24.90	-8.50	507.91	
MQ	228+34.90	-8.50	507.71	
MR	228+44.90	-8.50	507.50	
FB47	228+53.16	-8.50	507.33	
MS	228+63.16	-8.50	507.13	
MT	228+73.16	-8.50	506.92	
FB48	228+81.43	-8.50	506.75	
MU	228+91.43	-8.50	506.55	
MV	229+01.43	-8.50	506.34	
FB49	229+09.69	-8.50	506.17	
MW	229+19.69	-8.50	505.97	
MX	229+29.69	-8.50	505.76	
CL Relief Jt.	229+37.21	-8.50	505.61	
FB50	229+37.96	-8.50	505.59	
MY	229+47.96	-8.50	505.39	
MZ	229+57.96	-8.50	505.18	
FB51	229+66.22	-8.50	505.01	
NA	229+76.22	-8.50	504.80	
NB	229+86.22	-8.50	504.60	
FB52	229+94.49	-8.50	504.43	
NC	230+04.49	-8.50	504.22	
ND	230+14.49	-8.50	504.02	
FB53	230+22.75	-8.50	503.85	
NE	230+32.75	-8.50	503.64	
NF	230+42.75	-8.50	503.44	
CL W. Brg. Pier 13 / FB54	230+51.02	-8.50	503.27	
CL Pier 13 / Exp. Jt.	230+52.77	-8.50	503.23	

Note A:
Theoretical Grade Elevations Adjusted for Dead Load Deflection and Grinding will be provided to the Contractor in accordance with the special provision "Contractor Requirements for Dead Load Deflection and Top of Slab Elevation Data."

MODEL: Default
FILE NAME: P:\4312-WBRrCLugageRehab\CADD\Structural_SN 090-0115_WBMainBridge_Final Plans\0900115-68E44-040-TOSE-Spans 12-14_06.dgn
3/13/2025 12:39:52 PM

MODJESKI and MASTERS

USER NAME =	DESIGNED - YSS	REVISED -
	CHECKED - JCH	REVISED -
PLOT SCALE =	DRAWN - JJE	REVISED -
PLOT DATE =	CHECKED - YSS	REVISED -

STATE OF ILLINOIS
DEPARTMENT OF TRANSPORTATION

TOP OF SLAB ELEVATIONS - SPANS 12-14 - 6
STRUCTURE NO. 090-0115

SHEET S40 OF S214 SHEETS

F.A.P. RTE.	SECTION	COUNTY	TOTAL SHEETS	SHEET NO.
317	(15B-1)BP,BRR	PEO/TAZ	418	210
		CONTRACT NO. 68E44		
	ILLINOIS	FED. AID PROJECT		

STRINGER 4

Location	Station	Offset	Theoretical Grade Elevations	Theoretical Grade Elevations Adjusted For Dead Load Deflection and Grinding
CL E. Brg. Pier 10 / FB0	215+20.52	-6.00	503.35	
IA	215+30.52	-6.00	503.55	
IB	215+40.52	-6.00	503.76	
FB1	215+48.79	-6.00	503.93	
IC	215+58.79	-6.00	504.13	
ID	215+68.79	-6.00	504.34	
FB2	215+77.05	-6.00	504.51	See Note A
IE	215+87.05	-6.00	504.71	
IF	215+97.05	-6.00	504.92	
FB3	216+05.32	-6.00	505.09	
IG	216+15.32	-6.00	505.29	
IH	216+25.32	-6.00	505.50	
FB4	216+33.58	-6.00	505.67	
CL Relief Jt.	216+34.33	-6.00	505.68	
II	216+43.58	-6.00	505.87	
IJ	216+53.58	-6.00	506.08	
FB5	216+61.85	-6.00	506.25	
IK	216+71.85	-6.00	506.45	
IL	216+81.85	-6.00	506.66	
FB6	216+90.11	-6.00	506.83	
IM	217+00.11	-6.00	507.03	
IN	217+10.11	-6.00	507.24	
FB7	217+18.38	-6.00	507.41	
IO	217+28.38	-6.00	507.61	
IP	217+38.38	-6.00	507.82	
FB8	217+46.65	-6.00	507.99	
CL Relief Jt.	217+47.40	-6.00	508.00	
IQ	217+56.65	-6.00	508.19	
IR	217+66.65	-6.00	508.40	
FB9	217+74.91	-6.00	508.57	
IS	217+84.91	-6.00	508.77	
IT	217+94.91	-6.00	508.98	
FB10	218+03.18	-6.00	509.15	
IU	218+13.18	-6.00	509.35	
IV	218+23.18	-6.00	509.56	
FB11	218+31.44	-6.00	509.73	
IW	218+41.44	-6.00	509.93	
IX	218+51.44	-6.00	510.14	
FB12	218+59.71	-6.00	510.31	
CL Relief Jt.	218+60.46	-6.00	510.33	
IY	218+69.71	-6.00	510.51	
IZ	218+79.71	-6.00	510.72	
FB13	218+87.97	-6.00	510.88	
JA	218+97.97	-6.00	511.07	
JB	219+07.97	-6.00	511.26	
FB14	219+16.24	-6.00	511.41	
JC	219+26.24	-6.00	511.59	
JD	219+36.24	-6.00	511.76	
FB15	219+44.50	-6.00	511.90	
JE	219+54.50	-6.00	512.07	
JF	219+64.50	-6.00	512.23	

STRINGER 4 (Cont.)

Location	Station	Offset	Theoretical Grade Elevations	Theoretical Grade Elevations Adjusted For Dead Load Deflection and Grinding
CL Brg. Pier 11 / FB16	219+72.77	-6.00	512.36	
KA	219+82.77	-6.00	512.51	
KB	219+92.77	-6.00	512.66	
FB17	220+01.04	-6.00	512.77	
KC	220+11.04	-6.00	512.91	
KD	220+21.04	-6.00	513.04	
FB18	220+29.30	-6.00	513.15	See Note A
KE	220+39.30	-6.00	513.27	
KF	220+49.30	-6.00	513.39	
FB19	220+57.57	-6.00	513.48	
KG	220+67.57	-6.00	513.59	
KH	220+77.57	-6.00	513.70	
FB20	220+85.83	-6.00	513.78	
KI	220+95.83	-6.00	513.87	
KJ	221+05.83	-6.00	513.97	
CL Exp. Jt.	221+13.23	-6.00	514.03	
FB21	221+14.10	-6.00	514.04	
KK	221+24.10	-6.00	514.12	
KL	221+34.10	-6.00	514.19	
FB22	221+42.71	-6.00	514.26	
KM	221+52.71	-6.00	514.32	
KN	221+62.71	-6.00	514.39	
FB23	221+71.32	-6.00	514.44	
KO	221+81.32	-6.00	514.49	
KP	221+91.32	-6.00	514.54	
FB24	221+99.93	-6.00	514.58	
KQ	222+09.93	-6.00	514.62	
KR	222+19.93	-6.00	514.65	
FB25	222+28.55	-6.00	514.68	
CL Relief Jt.	222+29.30	-6.00	514.68	
KS	222+38.55	-6.00	514.70	
KT	222+48.55	-6.00	514.72	
FB26	222+57.16	-6.00	514.73	
KU	222+67.16	-6.00	514.75	
KV	222+77.16	-6.00	514.75	
FB27	222+85.77	-6.00	514.75	
KW	222+95.77	-6.00	514.75	
KX	223+05.77	-6.00	514.74	
FB28	223+14.38	-6.00	514.73	
KY	223+24.38	-6.00	514.72	
KZ	223+34.38	-6.00	514.69	
CL Relief Jt.	223+42.24	-6.00	514.67	
FB29	223+42.99	-6.00	514.67	
LA	223+52.99	-6.00	514.64	
LB	223+62.99	-6.00	514.60	
FB30	223+71.61	-6.00	514.57	
LC	223+81.61	-6.00	514.52	
LD	223+91.61	-6.00	514.47	
FB31	224+00.22	-6.00	514.43	
LE	224+10.22	-6.00	514.37	
LF	224+20.22	-6.00	514.30	
FB32	224+28.83	-6.00	514.24	
LG	224+38.83	-6.00	514.17	
LH	224+48.83	-6.00	514.09	
FB33	224+57.44	-6.00	514.02	
CL Exp. Jt.	224+58.19	-6.00	514.01	
LI	224+67.44	-6.00	513.93	
LJ	224+77.44	-6.00	513.84	
FB34	224+85.71	-6.00	513.76	
LK	224+95.71	-6.00	513.66	
LL	225+05.71	-6.00	513.55	
FB35	225+13.97	-6.00	513.46	
LM	225+23.97	-6.00	513.35	
LN	225+33.97	-6.00	513.23	
FB36	225+42.24	-6.00	513.12	
LO	225+52.24	-6.00	513.00	
LP	225+62.24	-6.00	512.86	
FB37	225+70.50	-6.00	512.75	
LQ	225+80.50	-6.00	512.60	
LR	225+90.50	-6.00	512.46	

STRINGER 4 (Cont.)

Location	Station	Offset	Theoretical Grade Elevations	Theoretical Grade Elevations Adjusted For Dead Load Deflection and Grinding
CL Brg. Pier 12 / FB38	225+98.77	-6.00	512.33	
MA	226+08.77	-6.00	512.17	
MB	226+18.77	-6.00	512.01	
FB39	226+27.04	-6.00	511.87	
MC	226+37.04	-6.00	511.70	
MD	226+47.04	-6.00	511.53	
FB40	226+55.30	-6.00	511.38	See Note A
ME	226+65.30	-6.00	511.19	
MF	226+75.30	-6.00	511.01	
FB41	226+83.57	-6.00	510.84	
MG	226+93.57	-6.00	510.65	
MH	227+03.57	-6.00	510.44	
CL Relief Jt.	227+11.08	-6.00	510.29	
FB42	227+11.83	-6.00	510.27	
MI	227+21.83	-6.00	510.07	
MJ	227+31.83	-6.00	509.86	
FB43	227+40.10	-6.00	509.69	
MK	227+50.10	-6.00	509.49	
ML	227+60.10	-6.00	509.28	
FB44	227+68.36	-6.00	509.11	
MM	227+78.36	-6.00	508.91	
MN	227+88.36	-6.00	508.70	
FB45	227+96.63	-6.00	508.53	
MO	228+06.63	-6.00	508.33	
MP	228+16.63	-6.00	508.12	
CL Relief Jt.	228+24.15	-6.00	507.97	
FB46	228+24.90	-6.00	507.95	
MQ	228+34.90	-6.00	507.75	
MR	228+44.90	-6.00	507.54	
FB47	228+53.16	-6.00	507.37	
MS	228+63.16	-6.00	507.16	
MT	228+73.16	-6.00	506.96	
FB48	228+81.43	-6.00	506.79	
MU	228+91.43	-6.00	506.58	
MV	229+01.43	-6.00	506.38	
FB49	229+09.69	-6.00	506.21	
MW	229+19.69	-6.00	506.00	
MX	229+29.69	-6.00	505.80	
CL Relief Jt.	229+37.21	-6.00	505.64	
FB50	229+37.96	-6.00	505.63	
MY	229+47.96	-6.00	505.42	
MZ	229+57.96	-6.00	505.22	
FB51	229+66.22	-6.00	505.05	
NA	229+76.22	-6.00	504.84	
NB	229+86.22	-6.00	504.64	
FB52	229+94.49	-6.00	504.47	
NC	230+04.49	-6.00	504.26	
ND	230+14.49	-6.00	504.06	
FB53	230+22.75	-6.00	503.89	
NE	230+32.75	-6.00	503.68	
NF	230+42.75	-6.00	503.48	
CL W. Brg. Pier 13 / FB54	230+51.02	-6.00	503.31	
CL Pier 13 / Exp. Jt.	230+52.77	-6.00	503.27	

Note A:
Theoretical Grade Elevations Adjusted for Dead Load Deflection and Grinding will be provided to the Contractor in accordance with the special provision "Contractor Requirements for Dead Load Deflection and Top of Slab Elevation Data."

MODEL: Default
FILE NAME: P:\4312-WBRKCLugageRehab\CADD\Structural_SN 090-0115_WBMainBridge_Final Plans\0900115-68E44-041-TOSE-Spans 12-14_07.dgn

MODJESKI and MASTERS

USER NAME =	DESIGNED - YSS	REVISED -
	CHECKED - JCH	REVISED -
PLOT SCALE =	DRAWN - JJE	REVISED -
PLOT DATE =	CHECKED - YSS	REVISED -

STATE OF ILLINOIS
DEPARTMENT OF TRANSPORTATION

TOP OF SLAB ELEVATIONS - SPANS 12-14 - 7
STRUCTURE NO. 090-0115

SHEET S41 OF S214 SHEETS

F.A.P. RTE.	SECTION	COUNTY	TOTAL SHEETS	SHEET NO.
317	(15B-1)BP,BRR	PEO/TAZ	418	211
		CONTRACT NO. 68E44		
	ILLINOIS	FED. AID PROJECT		

3/13/2025 12:39:54 PM

℄ WB US 150 AND PG / STRINGER 5

Location	Station	Offset	Theoretical Grade Elevations	Theoretical Grade Elevations Adjusted For Dead Load Deflection and Grinding
CL E. Brg. Pier 10 / FB0	215+20.52	0.00	503.44	
IA	215+30.52	0.00	503.64	
IB	215+40.52	0.00	503.85	
FB1	215+48.79	0.00	504.02	
IC	215+58.79	0.00	504.22	
ID	215+68.79	0.00	504.43	
FB2	215+77.05	0.00	504.60	
IE	215+87.05	0.00	504.80	See Note A
IF	215+97.05	0.00	505.01	
FB3	216+05.32	0.00	505.18	
IG	216+15.32	0.00	505.38	
IH	216+25.32	0.00	505.59	
FB4	216+33.58	0.00	505.76	
CL Relief Jt.	216+34.33	0.00	505.77	
II	216+43.58	0.00	505.96	
IJ	216+53.58	0.00	506.17	
FB5	216+61.85	0.00	506.34	
IK	216+71.85	0.00	506.54	
IL	216+81.85	0.00	506.75	
FB6	216+90.11	0.00	506.92	
IM	217+00.11	0.00	507.12	
IN	217+10.11	0.00	507.33	
FB7	217+18.38	0.00	507.50	
IO	217+28.38	0.00	507.70	
IP	217+38.38	0.00	507.91	
FB8	217+46.65	0.00	508.08	
CL Relief Jt.	217+47.40	0.00	508.09	
IQ	217+56.65	0.00	508.28	
IR	217+66.65	0.00	508.49	
FB9	217+74.91	0.00	508.66	
IS	217+84.91	0.00	508.86	
IT	217+94.91	0.00	509.07	
FB10	218+03.18	0.00	509.24	
IU	218+13.18	0.00	509.44	
IV	218+23.18	0.00	509.65	
FB11	218+31.44	0.00	509.82	
IW	218+41.44	0.00	510.02	
IX	218+51.44	0.00	510.23	
FB12	218+59.71	0.00	510.40	
CL Relief Jt.	218+60.46	0.00	510.42	
IY	218+69.71	0.00	510.60	
IZ	218+79.71	0.00	510.81	
FB13	218+87.97	0.00	510.97	
JA	218+97.97	0.00	511.16	
JB	219+07.97	0.00	511.35	
FB14	219+16.24	0.00	511.50	
JC	219+26.24	0.00	511.68	
JD	219+36.24	0.00	511.85	
FB15	219+44.50	0.00	511.99	
JE	219+54.50	0.00	512.16	
JF	219+64.50	0.00	512.32	

℄ WB US 150 AND PG / STRINGER 5 (Cont.)

Location	Station	Offset	Theoretical Grade Elevations	Theoretical Grade Elevations Adjusted For Dead Load Deflection and Grinding
CL Brg. Pier 11 / FB16	219+72.77	0.00	512.45	
KA	219+82.77	0.00	512.60	
KB	219+92.77	0.00	512.75	
FB17	220+01.04	0.00	512.86	
KC	220+11.04	0.00	513.00	
KD	220+21.04	0.00	513.13	
FB18	220+29.30	0.00	513.24	
KE	220+39.30	0.00	513.36	See Note A
KF	220+49.30	0.00	513.48	
FB19	220+57.57	0.00	513.57	
KG	220+67.57	0.00	513.68	
KH	220+77.57	0.00	513.79	
FB20	220+85.83	0.00	513.87	
KI	220+95.83	0.00	513.96	
KJ	221+05.83	0.00	514.06	
CL Exp. Jt.	221+13.23	0.00	514.12	
FB21	221+14.10	0.00	514.13	
KK	221+24.10	0.00	514.21	
KL	221+34.10	0.00	514.28	
FB22	221+42.71	0.00	514.35	
KM	221+52.71	0.00	514.41	
KN	221+62.71	0.00	514.48	
FB23	221+71.32	0.00	514.53	
KO	221+81.32	0.00	514.58	
KP	221+91.32	0.00	514.63	
FB24	221+99.93	0.00	514.67	
KQ	222+09.93	0.00	514.71	
KR	222+19.93	0.00	514.74	
FB25	222+28.55	0.00	514.77	
CL Relief Jt.	222+29.30	0.00	514.77	
KS	222+38.55	0.00	514.79	
KT	222+48.55	0.00	514.81	
FB26	222+57.16	0.00	514.82	
KU	222+67.16	0.00	514.84	
KV	222+77.16	0.00	514.84	
FB27	222+85.77	0.00	514.84	
KW	222+95.77	0.00	514.84	
KX	223+05.77	0.00	514.83	
FB28	223+14.38	0.00	514.82	
KY	223+24.38	0.00	514.81	
KZ	223+34.38	0.00	514.78	
CL Relief Jt.	223+42.24	0.00	514.76	
FB29	223+42.99	0.00	514.76	
LA	223+52.99	0.00	514.73	
LB	223+62.99	0.00	514.69	
FB30	223+71.61	0.00	514.66	
LC	223+81.61	0.00	514.61	
LD	223+91.61	0.00	514.56	
FB31	224+00.22	0.00	514.52	
LE	224+10.22	0.00	514.46	
LF	224+20.22	0.00	514.39	
FB32	224+28.83	0.00	514.33	
LG	224+38.83	0.00	514.26	
LH	224+48.83	0.00	514.18	
FB33	224+57.44	0.00	514.11	
CL Exp. Jt.	224+58.19	0.00	514.10	
LI	224+67.44	0.00	514.02	
LJ	224+77.44	0.00	513.93	
FB34	224+85.71	0.00	513.85	
LK	224+95.71	0.00	513.75	
LL	225+05.71	0.00	513.64	
FB35	225+13.97	0.00	513.55	
LM	225+23.97	0.00	513.44	
LN	225+33.97	0.00	513.32	
FB36	225+42.24	0.00	513.21	
LO	225+52.24	0.00	513.09	
LP	225+62.24	0.00	512.95	
FB37	225+70.50	0.00	512.84	
LQ	225+80.50	0.00	512.69	
LR	225+90.50	0.00	512.55	

℄ WB US 150 AND PG / STRINGER 5 (Cont.)

Location	Station	Offset	Theoretical Grade Elevations	Theoretical Grade Elevations Adjusted For Dead Load Deflection and Grinding
CL Brg. Pier 12 / FB38	225+98.77	0.00	512.42	
MA	226+08.77	0.00	512.26	
MB	226+18.77	0.00	512.10	
FB39	226+27.04	0.00	511.96	
MC	226+37.04	0.00	511.79	
MD	226+47.04	0.00	511.62	
FB40	226+55.30	0.00	511.47	
ME	226+65.30	0.00	511.28	See Note A
MF	226+75.30	0.00	511.10	
FB41	226+83.57	0.00	510.93	
MG	226+93.57	0.00	510.74	
MH	227+03.57	0.00	510.53	
CL Relief Jt.	227+11.08	0.00	510.38	
FB42	227+11.83	0.00	510.36	
MI	227+21.83	0.00	510.16	
MJ	227+31.83	0.00	509.95	
FB43	227+40.10	0.00	509.78	
MK	227+50.10	0.00	509.58	
ML	227+60.10	0.00	509.37	
FB44	227+68.36	0.00	509.20	
MM	227+78.36	0.00	509.00	
MN	227+88.36	0.00	508.79	
FB45	227+96.63	0.00	508.62	
MO	228+06.63	0.00	508.42	
MP	228+16.63	0.00	508.21	
CL Relief Jt.	228+24.15	0.00	508.06	
FB46	228+24.90	0.00	508.04	
MQ	228+34.90	0.00	507.84	
MR	228+44.90	0.00	507.63	
FB47	228+53.16	0.00	507.46	
MS	228+63.16	0.00	507.25	
MT	228+73.16	0.00	507.05	
FB48	228+81.43	0.00	506.88	
MU	228+91.43	0.00	506.67	
MV	229+01.43	0.00	506.47	
FB49	229+09.69	0.00	506.30	
MW	229+19.69	0.00	506.09	
MX	229+29.69	0.00	505.89	
CL Relief Jt.	229+37.21	0.00	505.73	
FB50	229+37.96	0.00	505.72	
MY	229+47.96	0.00	505.51	
MZ	229+57.96	0.00	505.31	
FB51	229+66.22	0.00	505.14	
NA	229+76.22	0.00	504.93	
NB	229+86.22	0.00	504.73	
FB52	229+94.49	0.00	504.56	
NC	230+04.49	0.00	504.35	
ND	230+14.49	0.00	504.15	
FB53	230+22.75	0.00	503.98	
NE	230+32.75	0.00	503.77	
NF	230+42.75	0.00	503.57	
CL W. Brg. Pier 13 / FB54	230+51.02	0.00	503.40	
CL Pier 13 / Exp. Jt.	230+52.77	0.00	503.36	

Note A:
Theoretical Grade Elevations Adjusted for Dead Load Deflection and Grinding will be provided to the Contractor in accordance with the special provision "Contractor Requirements for Dead Load Deflection and Top of Slab Elevation Data."

MODEL: Default
FILE NAME: P:\4312-WBKcLugageRehab\CADD\Structural_SN 090-0115_WBMainBridge_Final Plans\0900115-68E44-042-TOSE-Spans 12-14_08.dgn

MODJESKI and MASTERS

USER NAME =	DESIGNED - YSS	REVISED -
	CHECKED - JCH	REVISED -
PLOT SCALE =	DRAWN - JJE	REVISED -
PLOT DATE =	CHECKED - YSS	REVISED -

STATE OF ILLINOIS
DEPARTMENT OF TRANSPORTATION

TOP OF SLAB ELEVATIONS - SPANS 12-14 - 8
STRUCTURE NO. 090-0115

SHEET S42 OF S214 SHEETS

F.A.P. RTE.	SECTION	COUNTY	TOTAL SHEETS	SHEET NO.
317	(15B-1)BP,BRR	PEO/TAZ	418	212
		CONTRACT NO. 68E44		
	ILLINOIS	FED. AID PROJECT		

3/13/2025 12:39:58 PM

STRINGER 6

Location	Station	Offset	Theoretical Grade Elevations	Theoretical Grade Elevations Adjusted For Dead Load Deflection and Grinding
CL E. Brg. Pier 10 / FB0	215+20.52	6.00	503.35	
IA	215+30.52	6.00	503.55	
IB	215+40.52	6.00	503.76	
FB1	215+48.79	6.00	503.93	
IC	215+58.79	6.00	504.13	
ID	215+68.79	6.00	504.34	
FB2	215+77.05	6.00	504.51	
IE	215+87.05	6.00	504.71	See Note A
IF	215+97.05	6.00	504.92	
FB3	216+05.32	6.00	505.09	
IG	216+15.32	6.00	505.29	
IH	216+25.32	6.00	505.50	
FB4	216+33.58	6.00	505.67	
CL Relief Jt.	216+34.33	6.00	505.68	
II	216+43.58	6.00	505.87	
IJ	216+53.58	6.00	506.08	
FB5	216+61.85	6.00	506.25	
IK	216+71.85	6.00	506.45	
IL	216+81.85	6.00	506.66	
FB6	216+90.11	6.00	506.83	
IM	217+00.11	6.00	507.03	
IN	217+10.11	6.00	507.24	
FB7	217+18.38	6.00	507.41	
IO	217+28.38	6.00	507.61	
IP	217+38.38	6.00	507.82	
FB8	217+46.65	6.00	507.99	
CL Relief Jt.	217+47.40	6.00	508.00	
IQ	217+56.65	6.00	508.19	
IR	217+66.65	6.00	508.40	
FB9	217+74.91	6.00	508.57	
IS	217+84.91	6.00	508.77	
IT	217+94.91	6.00	508.98	
FB10	218+03.18	6.00	509.15	
IU	218+13.18	6.00	509.35	
IV	218+23.18	6.00	509.56	
FB11	218+31.44	6.00	509.73	
IW	218+41.44	6.00	509.93	
IX	218+51.44	6.00	510.14	
FB12	218+59.71	6.00	510.31	
CL Relief Jt.	218+60.46	6.00	510.33	
IY	218+69.71	6.00	510.51	
IZ	218+79.71	6.00	510.72	
FB13	218+87.97	6.00	510.88	
JA	218+97.97	6.00	511.07	
JB	219+07.97	6.00	511.26	
FB14	219+16.24	6.00	511.41	
JC	219+26.24	6.00	511.59	
JD	219+36.24	6.00	511.76	
FB15	219+44.50	6.00	511.90	
JE	219+54.50	6.00	512.07	
JF	219+64.50	6.00	512.23	

STRINGER 6 (Cont.)

Location	Station	Offset	Theoretical Grade Elevations	Theoretical Grade Elevations Adjusted For Dead Load Deflection and Grinding
CL Brg. Pier 11 / FB16	219+72.77	6.00	512.36	
KA	219+82.77	6.00	512.51	
KB	219+92.77	6.00	512.66	
FB17	220+01.04	6.00	512.77	
KC	220+11.04	6.00	512.91	
KD	220+21.04	6.00	513.04	
FB18	220+29.30	6.00	513.15	
KE	220+39.30	6.00	513.27	See Note A
KF	220+49.30	6.00	513.39	
FB19	220+57.57	6.00	513.48	
KG	220+67.57	6.00	513.59	
KH	220+77.57	6.00	513.70	
FB20	220+85.83	6.00	513.78	
KI	220+95.83	6.00	513.87	
KJ	221+05.83	6.00	513.97	
CL Exp. Jt.	221+13.23	6.00	514.03	
FB21	221+14.10	6.00	514.04	
KK	221+24.10	6.00	514.12	
KL	221+34.10	6.00	514.19	
FB22	221+42.71	6.00	514.26	
KM	221+52.71	6.00	514.32	
KN	221+62.71	6.00	514.39	
FB23	221+71.32	6.00	514.44	
KO	221+81.32	6.00	514.49	
KP	221+91.32	6.00	514.54	
FB24	221+99.93	6.00	514.58	
KQ	222+09.93	6.00	514.62	
KR	222+19.93	6.00	514.65	
FB25	222+28.55	6.00	514.68	
CL Relief Jt.	222+29.30	6.00	514.68	
KS	222+38.55	6.00	514.70	
KT	222+48.55	6.00	514.72	
FB26	222+57.16	6.00	514.73	
KU	222+67.16	6.00	514.75	
KV	222+77.16	6.00	514.75	
FB27	222+85.77	6.00	514.75	
KW	222+95.77	6.00	514.75	
KX	223+05.77	6.00	514.74	
FB28	223+14.38	6.00	514.73	
KY	223+24.38	6.00	514.72	
KZ	223+34.38	6.00	514.69	
CL Relief Jt.	223+42.24	6.00	514.67	
FB29	223+42.99	6.00	514.67	
LA	223+52.99	6.00	514.64	
LB	223+62.99	6.00	514.60	
FB30	223+71.61	6.00	514.57	
LC	223+81.61	6.00	514.52	
LD	223+91.61	6.00	514.47	
FB31	224+00.22	6.00	514.43	
LE	224+10.22	6.00	514.37	
LF	224+20.22	6.00	514.30	
FB32	224+28.83	6.00	514.24	
LG	224+38.83	6.00	514.17	
LH	224+48.83	6.00	514.09	
FB33	224+57.44	6.00	514.02	
CL Exp. Jt.	224+58.19	6.00	514.01	
LI	224+67.44	6.00	513.93	
LJ	224+77.44	6.00	513.84	
FB34	224+85.71	6.00	513.76	
LK	224+95.71	6.00	513.66	
LL	225+05.71	6.00	513.55	
FB35	225+13.97	6.00	513.46	
LM	225+23.97	6.00	513.35	
LN	225+33.97	6.00	513.23	
FB36	225+42.24	6.00	513.12	
LO	225+52.24	6.00	513.00	
LP	225+62.24	6.00	512.86	
FB37	225+70.50	6.00	512.75	
LQ	225+80.50	6.00	512.60	
LR	225+90.50	6.00	512.46	

STRINGER 6 (Cont.)

Location	Station	Offset	Theoretical Grade Elevations	Theoretical Grade Elevations Adjusted For Dead Load Deflection and Grinding
CL Brg. Pier 12 / FB38	225+98.77	6.00	512.33	
MA	226+08.77	6.00	512.17	
MB	226+18.77	6.00	512.01	
FB39	226+27.04	6.00	511.87	
MC	226+37.04	6.00	511.70	
MD	226+47.04	6.00	511.53	
FB40	226+55.30	6.00	511.38	
ME	226+65.30	6.00	511.19	See Note A
MF	226+75.30	6.00	511.01	
FB41	226+83.57	6.00	510.84	
MG	226+93.57	6.00	510.65	
MH	227+03.57	6.00	510.44	
CL Relief Jt.	227+11.08	6.00	510.29	
FB42	227+11.83	6.00	510.27	
MI	227+21.83	6.00	510.07	
MJ	227+31.83	6.00	509.86	
FB43	227+40.10	6.00	509.69	
MK	227+50.10	6.00	509.49	
ML	227+60.10	6.00	509.28	
FB44	227+68.36	6.00	509.11	
MM	227+78.36	6.00	508.91	
MN	227+88.36	6.00	508.70	
FB45	227+96.63	6.00	508.53	
MO	228+06.63	6.00	508.33	
MP	228+16.63	6.00	508.12	
CL Relief Jt.	228+24.15	6.00	507.97	
FB46	228+24.90	6.00	507.95	
MQ	228+34.90	6.00	507.75	
MR	228+44.90	6.00	507.54	
FB47	228+53.16	6.00	507.37	
MS	228+63.16	6.00	507.16	
MT	228+73.16	6.00	506.96	
FB48	228+81.43	6.00	506.79	
MU	228+91.43	6.00	506.58	
MV	229+01.43	6.00	506.38	
FB49	229+09.69	6.00	506.21	
MW	229+19.69	6.00	506.00	
MX	229+29.69	6.00	505.80	
CL Relief Jt.	229+37.21	6.00	505.64	
FB50	229+37.96	6.00	505.63	
MY	229+47.96	6.00	505.42	
MZ	229+57.96	6.00	505.22	
FB51	229+66.22	6.00	505.05	
NA	229+76.22	6.00	504.84	
NB	229+86.22	6.00	504.64	
FB52	229+94.49	6.00	504.47	
NC	230+04.49	6.00	504.26	
ND	230+14.49	6.00	504.06	
FB53	230+22.75	6.00	503.89	
NE	230+32.75	6.00	503.68	
NF	230+42.75	6.00	503.48	
CL W. Brg. Pier 13 / FB54	230+51.02	6.00	503.31	
CL Pier 13 / Exp. Jt.	230+52.77	6.00	503.27	

Note A:
Theoretical Grade Elevations Adjusted for Dead Load Deflection and Grinding will be provided to the Contractor in accordance with the special provision "Contractor Requirements for Dead Load Deflection and Top of Slab Elevation Data."

STRINGER 7

Location	Station	Offset	Theoretical Grade Elevations	Theoretical Grade Elevations Adjusted For Dead Load Deflection and Grinding
CL E. Brg. Pier 10 / FB0	215+20.52	12.00	503.25	
IA	215+30.52	12.00	503.46	
IB	215+40.52	12.00	503.66	
FB1	215+48.79	12.00	503.83	
IC	215+58.79	12.00	504.04	
ID	215+68.79	12.00	504.24	
FB2	215+77.05	12.00	504.41	See Note A
IE	215+87.05	12.00	504.62	
IF	215+97.05	12.00	504.82	
FB3	216+05.32	12.00	504.99	
IG	216+15.32	12.00	505.20	
IH	216+25.32	12.00	505.40	
FB4	216+33.58	12.00	505.57	
CL Relief Jt.	216+34.33	12.00	505.59	
II	216+43.58	12.00	505.78	
IJ	216+53.58	12.00	505.98	
FB5	216+61.85	12.00	506.15	
IK	216+71.85	12.00	506.36	
IL	216+81.85	12.00	506.56	
FB6	216+90.11	12.00	506.73	
IM	217+00.11	12.00	506.94	
IN	217+10.11	12.00	507.14	
FB7	217+18.38	12.00	507.31	
IO	217+28.38	12.00	507.52	
IP	217+38.38	12.00	507.72	
FB8	217+46.65	12.00	507.89	
CL Relief Jt.	217+47.40	12.00	507.91	
IQ	217+56.65	12.00	508.10	
IR	217+66.65	12.00	508.30	
FB9	217+74.91	12.00	508.47	
IS	217+84.91	12.00	508.68	
IT	217+94.91	12.00	508.88	
FB10	218+03.18	12.00	509.05	
IU	218+13.18	12.00	509.26	
IV	218+23.18	12.00	509.46	
FB11	218+31.44	12.00	509.63	
IW	218+41.44	12.00	509.84	
IX	218+51.44	12.00	510.04	
FB12	218+59.71	12.00	510.21	
CL Relief Jt.	218+60.46	12.00	510.23	
IY	218+69.71	12.00	510.42	
IZ	218+79.71	12.00	510.62	
FB13	218+87.97	12.00	510.78	
JA	218+97.97	12.00	510.98	
JB	219+07.97	12.00	511.17	
FB14	219+16.24	12.00	511.32	
JC	219+26.24	12.00	511.50	
JD	219+36.24	12.00	511.67	
FB15	219+44.50	12.00	511.81	
JE	219+54.50	12.00	511.97	
JF	219+64.50	12.00	512.13	

STRINGER 7 (Cont.)

Location	Station	Offset	Theoretical Grade Elevations	Theoretical Grade Elevations Adjusted For Dead Load Deflection and Grinding
CL Brg. Pier 11 / FB16	219+72.77	12.00	512.26	
KA	219+82.77	12.00	512.41	
KB	219+92.77	12.00	512.56	
FB17	220+01.04	12.00	512.68	
KC	220+11.04	12.00	512.81	
KD	220+21.04	12.00	512.95	
FB18	220+29.30	12.00	513.05	See Note A
KE	220+39.30	12.00	513.18	
KF	220+49.30	12.00	513.29	
FB19	220+57.57	12.00	513.39	
KG	220+67.57	12.00	513.50	
KH	220+77.57	12.00	513.60	
FB20	220+85.83	12.00	513.68	
KI	220+95.83	12.00	513.78	
KJ	221+05.83	12.00	513.87	
CL Exp. Jt.	221+13.23	12.00	513.93	
FB21	221+14.10	12.00	513.94	
KK	221+24.10	12.00	514.02	
KL	221+34.10	12.00	514.10	
FB22	221+42.71	12.00	514.16	
KM	221+52.71	12.00	514.23	
KN	221+62.71	12.00	514.29	
FB23	221+71.32	12.00	514.34	
KO	221+81.32	12.00	514.39	
KP	221+91.32	12.00	514.44	
FB24	221+99.93	12.00	514.48	
KQ	222+09.93	12.00	514.52	
KR	222+19.93	12.00	514.55	
FB25	222+28.55	12.00	514.58	
CL Relief Jt.	222+29.30	12.00	514.58	
KS	222+38.55	12.00	514.61	
KT	222+48.55	12.00	514.63	
FB26	222+57.16	12.00	514.64	
KU	222+67.16	12.00	514.65	
KV	222+77.16	12.00	514.66	
FB27	222+85.77	12.00	514.66	
KW	222+95.77	12.00	514.66	
KX	223+05.77	12.00	514.65	
FB28	223+14.38	12.00	514.64	
KY	223+24.38	12.00	514.62	
KZ	223+34.38	12.00	514.60	
CL Relief Jt.	223+42.24	12.00	514.58	
FB29	223+42.99	12.00	514.58	
LA	223+52.99	12.00	514.54	
LB	223+62.99	12.00	514.51	
FB30	223+71.61	12.00	514.47	
LC	223+81.61	12.00	514.43	
LD	223+91.61	12.00	514.38	
FB31	224+00.22	12.00	514.33	
LE	224+10.22	12.00	514.27	
LF	224+20.22	12.00	514.21	
FB32	224+28.83	12.00	514.15	
LG	224+38.83	12.00	514.08	
LH	224+48.83	12.00	514.00	
FB33	224+57.44	12.00	513.93	
CL Exp. Jt.	224+58.19	12.00	513.92	
LI	224+67.44	12.00	513.84	
LJ	224+77.44	12.00	513.75	
FB34	224+85.71	12.00	513.67	
LK	224+95.71	12.00	513.57	
LL	225+05.71	12.00	513.46	
FB35	225+13.97	12.00	513.37	
LM	225+23.97	12.00	513.25	
LN	225+33.97	12.00	513.13	
FB36	225+42.24	12.00	513.03	
LO	225+52.24	12.00	512.90	
LP	225+62.24	12.00	512.77	
FB37	225+70.50	12.00	512.65	
LQ	225+80.50	12.00	512.51	
LR	225+90.50	12.00	512.36	

STRINGER 7 (Cont.)

Location	Station	Offset	Theoretical Grade Elevations	Theoretical Grade Elevations Adjusted For Dead Load Deflection and Grinding
CL Brg. Pier 12 / FB38	225+98.77	12.00	512.24	
MA	226+08.77	12.00	512.08	
MB	226+18.77	12.00	511.92	
FB39	226+27.04	12.00	511.78	
MC	226+37.04	12.00	511.61	
MD	226+47.04	12.00	511.43	
FB40	226+55.30	12.00	511.28	See Note A
ME	226+65.30	12.00	511.10	
MF	226+75.30	12.00	510.91	
FB41	226+83.57	12.00	510.75	
MG	226+93.57	12.00	510.55	
MH	227+03.57	12.00	510.35	
CL Relief Jt.	227+11.08	12.00	510.19	
FB42	227+11.83	12.00	510.18	
MI	227+21.83	12.00	509.97	
MJ	227+31.83	12.00	509.77	
FB43	227+40.10	12.00	509.60	
MK	227+50.10	12.00	509.39	
ML	227+60.10	12.00	509.19	
FB44	227+68.36	12.00	509.02	
MM	227+78.36	12.00	508.81	
MN	227+88.36	12.00	508.61	
FB45	227+96.63	12.00	508.44	
MO	228+06.63	12.00	508.23	
MP	228+16.63	12.00	508.03	
CL Relief Jt.	228+24.15	12.00	507.87	
FB46	228+24.90	12.00	507.86	
MQ	228+34.90	12.00	507.65	
MR	228+44.90	12.00	507.44	
FB47	228+53.16	12.00	507.27	
MS	228+63.16	12.00	507.07	
MT	228+73.16	12.00	506.86	
FB48	228+81.43	12.00	506.69	
MU	228+91.43	12.00	506.49	
MV	229+01.43	12.00	506.28	
FB49	229+09.69	12.00	506.11	
MW	229+19.69	12.00	505.91	
MX	229+29.69	12.00	505.70	
CL Relief Jt.	229+37.21	12.00	505.55	
FB50	229+37.96	12.00	505.53	
MY	229+47.96	12.00	505.33	
MZ	229+57.96	12.00	505.12	
FB51	229+66.22	12.00	504.95	
NA	229+76.22	12.00	504.75	
NB	229+86.22	12.00	504.54	
FB52	229+94.49	12.00	504.37	
NC	230+04.49	12.00	504.17	
ND	230+14.49	12.00	503.96	
FB53	230+22.75	12.00	503.79	
NE	230+32.75	12.00	503.59	
NF	230+42.75	12.00	503.38	
CL W. Brg. Pier 13 / FB54	230+51.02	12.00	503.21	
CL Pier 13 / Exp. Jt.	230+52.77	12.00	503.18	

Note A:
Theoretical Grade Elevations Adjusted for Dead Load Deflection and Grinding will be provided to the Contractor in accordance with the special provision "Contractor Requirements for Dead Load Deflection and Top of Slab Elevation Data."

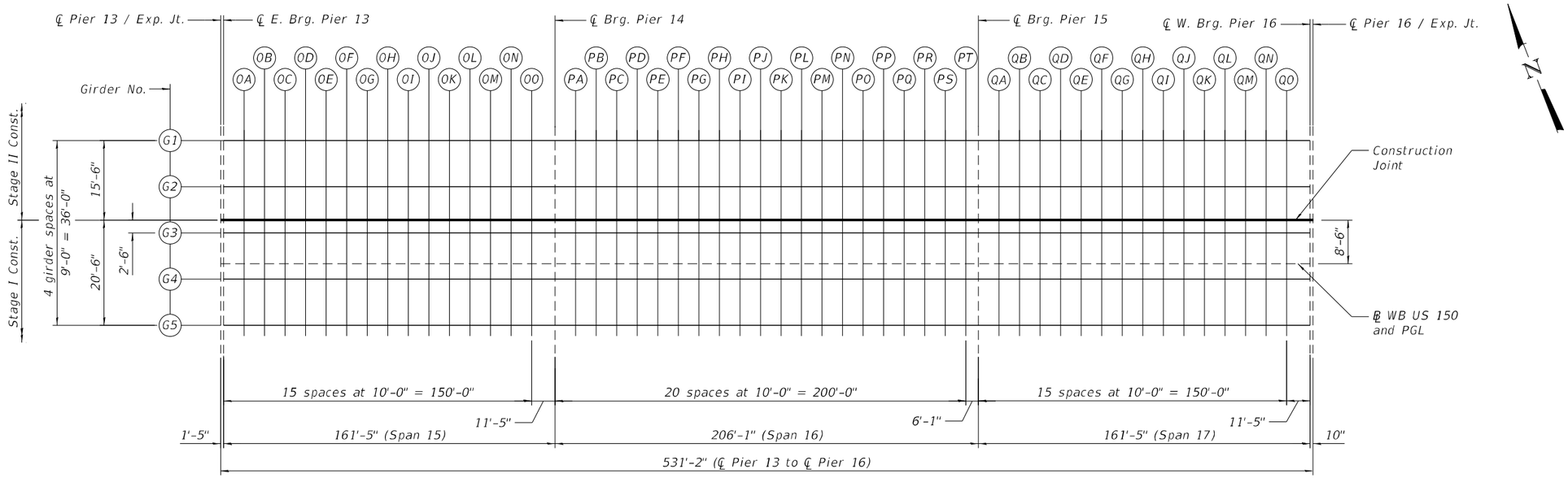

PLAN

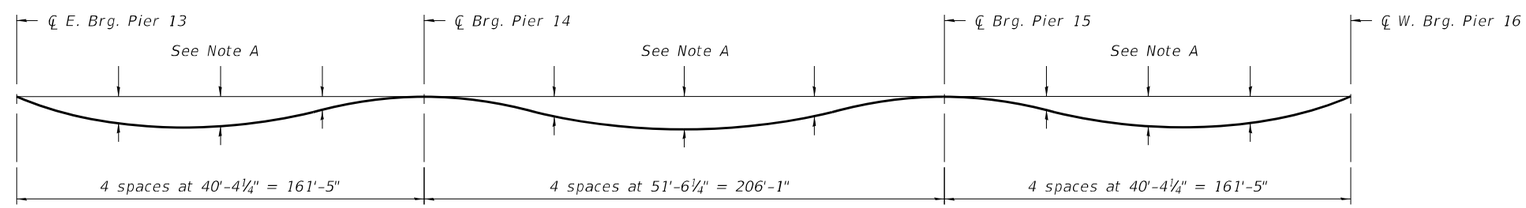

DEAD LOAD DEFLECTION DIAGRAM

Includes weight of concrete only.

Note:
The dead load deflections are not to be used in the field if the engineer is working from the grade elevations adjusted for dead load deflections and grinding as shown on sheets S46 thru S48 of S214.

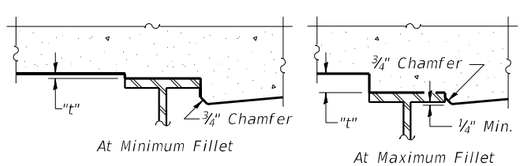

To determine "t": After all structural steel has been erected, elevations of the top flanges of the beams shall be taken at intervals shown on sheets S46 thru S48 of S214. These elevations subtracted from the "Theoretical Grade Elevations Adjusted for Dead Load Deflection and Grinding" shown on sheets S46 thru S48 of S214, minus the initial slab thickness prior to grinding, equals the fillet heights "t" above top flange of beams.

The slab is to be ground after curing to achieve smoothness, but the slab is not to be ground to elevations below the "Theoretical Grade Elevations" shown on sheets S46 thru S48 of S214. For grinding the deck, see Special Provisions.

FILLET HEIGHTS

Note A:
Dead load deflections will be provided to the Contractor in accordance with the special provision "Contractor Requirements for Dead Load Deflection and Top of Slab Elevation Data."

MODEL: PLOTSHEET-S15-S17_1
FILE NAME: P:\4312-WBMcClugageRehab\CADD\Structural_SN 090-0115_WBMainBridge_Final Plans\0900115-68E44-045-TOSE-Spans 15-17_01.dgn

MODJESKI and MASTERS	USER NAME =	DESIGNED - YSS	REVISED -
		CHECKED - JCH	REVISED -
	PLOT SCALE =	DRAWN - JJE	REVISED -
	PLOT DATE =	CHECKED - YSS	REVISED -

STATE OF ILLINOIS
DEPARTMENT OF TRANSPORTATION

TOP OF SLAB ELEVATIONS - SPANS 15-17 - 1
STRUCTURE NO. 090-0115

SHEET S45 OF S214 SHEETS

F.A.P. RTE.	SECTION	COUNTY	TOTAL SHEETS	SHEET NO.
317	(15B-1)BP,BRR	PEO/TAZ	418	215
		CONTRACT NO. 68E44		
		ILLINOIS	FED. AID PROJECT	

3/13/2025 12:40:08 PM

GIRDER 1

Location	Station	Offset	Theoretical Grade Elevations	Theoretical Grade Elevations Adjusted For Dead Load Deflection and Grinding
CL E. Brg. Pier 13	230+54.19	-24.00	502.91	
0A	230+64.19	-24.00	502.71	
0B	230+74.19	-24.00	502.50	
0C	230+84.19	-24.00	502.29	
0D	230+94.19	-24.00	502.09	
0E	231+04.19	-24.00	501.88	See Note A
0F	231+14.19	-24.00	501.68	
0G	231+24.19	-24.00	501.47	
0H	231+34.19	-24.00	501.27	
0I	231+44.19	-24.00	501.06	
0J	231+54.19	-24.00	500.86	
0K	231+64.19	-24.00	500.65	
0L	231+74.19	-24.00	500.45	
0M	231+84.19	-24.00	500.24	
0N	231+94.19	-24.00	500.04	
0O	232+04.19	-24.00	499.83	
CL Brg. Pier 14	232+15.60	-24.00	499.60	
PA	232+25.60	-24.00	499.39	
PB	232+35.60	-24.00	499.18	
PC	232+45.60	-24.00	498.98	
PD	232+55.60	-24.00	498.77	
PE	232+65.60	-24.00	498.57	
PF	232+75.60	-24.00	498.36	
PG	232+85.60	-24.00	498.16	
PH	232+95.60	-24.00	497.95	
PI	233+05.60	-24.00	497.75	
PJ	233+15.60	-24.00	497.54	
PK	233+25.60	-24.00	497.34	
PL	233+35.60	-24.00	497.13	
PM	233+45.60	-24.00	496.93	
PN	233+55.60	-24.00	496.72	
PO	233+65.60	-24.00	496.51	
PP	233+75.60	-24.00	496.31	
PQ	233+85.60	-24.00	496.10	
PR	233+95.60	-24.00	495.90	
PS	234+05.60	-24.00	495.69	
PT	234+15.60	-24.00	495.49	
CL Brg. Pier 15	234+21.69	-24.00	495.36	
QA	234+31.69	-24.00	495.16	
QB	234+41.69	-24.00	494.95	
QC	234+51.69	-24.00	494.75	
QD	234+61.69	-24.00	494.54	
QE	234+71.69	-24.00	494.34	
QF	234+81.69	-24.00	494.13	
QG	234+91.69	-24.00	493.92	
QH	235+01.69	-24.00	493.72	
QI	235+11.69	-24.00	493.51	
QJ	235+21.69	-24.00	493.31	
QK	235+31.69	-24.00	493.10	
QL	235+41.69	-24.00	492.90	
QM	235+51.69	-24.00	492.69	
QN	235+61.69	-24.00	492.49	
QO	235+71.69	-24.00	492.28	
CL W. Brg. Pier 16	235+83.11	-24.00	492.05	
CL Pier 16 / Exp. Jt.	235+83.94	-24.00	492.03	

GIRDER 2

Location	Station	Offset	Theoretical Grade Elevations	Theoretical Grade Elevations Adjusted For Dead Load Deflection and Grinding
CL E. Brg. Pier 13	230+54.19	-15.00	503.09	
0A	230+64.19	-15.00	502.89	
0B	230+74.19	-15.00	502.68	
0C	230+84.19	-15.00	502.47	
0D	230+94.19	-15.00	502.27	
0E	231+04.19	-15.00	502.06	See Note A
0F	231+14.19	-15.00	501.86	
0G	231+24.19	-15.00	501.65	
0H	231+34.19	-15.00	501.45	
0I	231+44.19	-15.00	501.24	
0J	231+54.19	-15.00	501.04	
0K	231+64.19	-15.00	500.83	
0L	231+74.19	-15.00	500.63	
0M	231+84.19	-15.00	500.42	
0N	231+94.19	-15.00	500.22	
0O	232+04.19	-15.00	500.01	
CL Brg. Pier 14	232+15.60	-15.00	499.78	
PA	232+25.60	-15.00	499.57	
PB	232+35.60	-15.00	499.36	
PC	232+45.60	-15.00	499.16	
PD	232+55.60	-15.00	498.95	
PE	232+65.60	-15.00	498.75	
PF	232+75.60	-15.00	498.54	
PG	232+85.60	-15.00	498.34	
PH	232+95.60	-15.00	498.13	
PI	233+05.60	-15.00	497.93	
PJ	233+15.60	-15.00	497.72	
PK	233+25.60	-15.00	497.52	
PL	233+35.60	-15.00	497.31	
PM	233+45.60	-15.00	497.11	
PN	233+55.60	-15.00	496.90	
PO	233+65.60	-15.00	496.69	
PP	233+75.60	-15.00	496.49	
PQ	233+85.60	-15.00	496.28	
PR	233+95.60	-15.00	496.08	
PS	234+05.60	-15.00	495.87	
PT	234+15.60	-15.00	495.67	
CL Brg. Pier 15	234+21.69	-15.00	495.54	
QA	234+31.69	-15.00	495.34	
QB	234+41.69	-15.00	495.13	
QC	234+51.69	-15.00	494.93	
QD	234+61.69	-15.00	494.72	
QE	234+71.69	-15.00	494.52	
QF	234+81.69	-15.00	494.31	
QG	234+91.69	-15.00	494.10	
QH	235+01.69	-15.00	493.90	
QI	235+11.69	-15.00	493.69	
QJ	235+21.69	-15.00	493.49	
QK	235+31.69	-15.00	493.28	
QL	235+41.69	-15.00	493.08	
QM	235+51.69	-15.00	492.87	
QN	235+61.69	-15.00	492.67	
QO	235+71.69	-15.00	492.46	
CL W. Brg. Pier 16	235+83.11	-15.00	492.23	
CL Pier 16/ Exp. Jt.	235+83.94	-15.00	492.21	

CONSTRUCTION JOINT

Location	Station	Offset	Theoretical Grade Elevations	Theoretical Grade Elevations Adjusted For Dead Load Deflection and Grinding
CL E. Brg. Pier 13	230+54.19	-8.50	503.20	
0A	230+64.19	-8.50	503.00	
0B	230+74.19	-8.50	502.79	
0C	230+84.19	-8.50	502.59	
0D	230+94.19	-8.50	502.38	
0E	231+04.19	-8.50	502.18	See Note A
0F	231+14.19	-8.50	501.97	
0G	231+24.19	-8.50	501.77	
0H	231+34.19	-8.50	501.56	
0I	231+44.19	-8.50	501.35	
0J	231+54.19	-8.50	501.15	
0K	231+64.19	-8.50	500.94	
0L	231+74.19	-8.50	500.74	
0M	231+84.19	-8.50	500.53	
0N	231+94.19	-8.50	500.33	
0O	232+04.19	-8.50	500.12	
CL Brg. Pier 14	232+15.60	-8.50	499.89	
PA	232+25.60	-8.50	499.68	
PB	232+35.60	-8.50	499.48	
PC	232+45.60	-8.50	499.27	
PD	232+55.60	-8.50	499.07	
PE	232+65.60	-8.50	498.86	
PF	232+75.60	-8.50	498.66	
PG	232+85.60	-8.50	498.45	
PH	232+95.60	-8.50	498.24	
PI	233+05.60	-8.50	498.04	
PJ	233+15.60	-8.50	497.83	
PK	233+25.60	-8.50	497.63	
PL	233+35.60	-8.50	497.42	
PM	233+45.60	-8.50	497.22	
PN	233+55.60	-8.50	497.01	
PO	233+65.60	-8.50	496.81	
PP	233+75.60	-8.50	496.60	
PQ	233+85.60	-8.50	496.40	
PR	233+95.60	-8.50	496.19	
PS	234+05.60	-8.50	495.99	
PT	234+15.60	-8.50	495.78	
CL Brg. Pier 15	234+21.69	-8.50	495.65	
QA	234+31.69	-8.50	495.45	
QB	234+41.69	-8.50	495.24	
QC	234+51.69	-8.50	495.04	
QD	234+61.69	-8.50	494.83	
QE	234+71.69	-8.50	494.63	
QF	234+81.69	-8.50	494.42	
QG	234+91.69	-8.50	494.22	
QH	235+01.69	-8.50	494.01	
QI	235+11.69	-8.50	493.81	
QJ	235+21.69	-8.50	493.60	
QK	235+31.69	-8.50	493.40	
QL	235+41.69	-8.50	493.19	
QM	235+51.69	-8.50	492.98	
QN	235+61.69	-8.50	492.78	
QO	235+71.69	-8.50	492.57	
CL W. Brg. Pier 16	235+83.11	-8.50	492.34	
CL Pier 16 / Exp. Jt.	235+83.94	-8.50	492.32	

Note A:
Theoretical Grade Elevations Adjusted for Dead Load Deflection and Grinding will be provided to the Contractor in accordance with the special provision "Contractor Requirements for Dead Load Deflection and Top of Slab Elevation Data."

MODEL: Default
FILE NAME: P:\4312-WBMcCLugageRehab\CADD\Structural_SN 090-0115_WBMainBridge_Final Plans\0900115-68E44-046-TOSE-Spans 15-17_02.dgn

MODJESKI and MASTERS

USER NAME =	DESIGNED - YSS	REVISED -
	CHECKED - JCH	REVISED -
PLOT SCALE =	DRAWN - JJE	REVISED -
PLOT DATE =	CHECKED - YSS	REVISED -

STATE OF ILLINOIS
DEPARTMENT OF TRANSPORTATION

TOP OF SLAB ELEVATIONS - SPANS 15-17 - 2
STRUCTURE NO. 090-0115

SHEET S46 OF S214 SHEETS

F.A.P. RTE.	SECTION	COUNTY	TOTAL SHEETS	SHEET NO.
317	(15B-1)BP,BRR	PEO/TAZ	418	216
		CONTRACT NO. 68E44		
	ILLINOIS	FED. AID PROJECT		

3/13/2025 12:40:10 PM

GIRDER 3

Location	Station	Offset	Theoretical Grade Elevations	Theoretical Grade Elevations Adjusted For Dead Load Deflection and Grinding
CL E. Brg. Pier 13	230+54.19	-6.00	503.24	
0A	230+64.19	-6.00	503.04	
0B	230+74.19	-6.00	502.83	
0C	230+84.19	-6.00	502.62	
0D	230+94.19	-6.00	502.42	
0E	231+04.19	-6.00	502.21	
0F	231+14.19	-6.00	502.01	
0G	231+24.19	-6.00	501.80	See Note A
0H	231+34.19	-6.00	501.60	
0I	231+44.19	-6.00	501.39	
0J	231+54.19	-6.00	501.19	
0K	231+64.19	-6.00	500.98	
0L	231+74.19	-6.00	500.78	
0M	231+84.19	-6.00	500.57	
0N	231+94.19	-6.00	500.37	
0O	232+04.19	-6.00	500.16	
CL Brg. Pier 14	232+15.60	-6.00	499.93	
PA	232+25.60	-6.00	499.72	
PB	232+35.60	-6.00	499.51	
PC	232+45.60	-6.00	499.31	
PD	232+55.60	-6.00	499.10	
PE	232+65.60	-6.00	498.90	
PF	232+75.60	-6.00	498.69	
PG	232+85.60	-6.00	498.49	
PH	232+95.60	-6.00	498.28	
PI	233+05.60	-6.00	498.08	
PJ	233+15.60	-6.00	497.87	
PK	233+25.60	-6.00	497.67	
PL	233+35.60	-6.00	497.46	
PM	233+45.60	-6.00	497.26	
PN	233+55.60	-6.00	497.05	
PO	233+65.60	-6.00	496.84	
PP	233+75.60	-6.00	496.64	
PQ	233+85.60	-6.00	496.43	
PR	233+95.60	-6.00	496.23	
PS	234+05.60	-6.00	496.02	
PT	234+15.60	-6.00	495.82	
CL Brg. Pier 15	234+21.69	-6.00	495.69	
QA	234+31.69	-6.00	495.49	
QB	234+41.69	-6.00	495.28	
QC	234+51.69	-6.00	495.08	
QD	234+61.69	-6.00	494.87	
QE	234+71.69	-6.00	494.67	
QF	234+81.69	-6.00	494.46	
QG	234+91.69	-6.00	494.25	
QH	235+01.69	-6.00	494.05	
QI	235+11.69	-6.00	493.84	
QJ	235+21.69	-6.00	493.64	
QK	235+31.69	-6.00	493.43	
QL	235+41.69	-6.00	493.23	
QM	235+51.69	-6.00	493.02	
QN	235+61.69	-6.00	492.82	
QO	235+71.69	-6.00	492.61	
CL W. Brg. Pier 16	235+83.11	-6.00	492.38	
CL Pier 16 / Exp. Jt.	235+83.94	-6.00	492.36	

℄ WB US 150 AND PG

Location	Station	Offset	Theoretical Grade Elevations	Theoretical Grade Elevations Adjusted For Dead Load Deflection and Grinding
CL E. Brg. Pier 13	230+54.19	0.00	503.33	
0A	230+64.19	0.00	503.13	
0B	230+74.19	0.00	502.92	
0C	230+84.19	0.00	502.71	
0D	230+94.19	0.00	502.51	
0E	231+04.19	0.00	502.30	
0F	231+14.19	0.00	502.10	
0G	231+24.19	0.00	501.89	See Note A
0H	231+34.19	0.00	501.69	
0I	231+44.19	0.00	501.48	
0J	231+54.19	0.00	501.28	
0K	231+64.19	0.00	501.07	
0L	231+74.19	0.00	500.87	
0M	231+84.19	0.00	500.66	
0N	231+94.19	0.00	500.46	
0O	232+04.19	0.00	500.25	
CL Brg. Pier 14	232+15.60	0.00	500.02	
PA	232+25.60	0.00	499.81	
PB	232+35.60	0.00	499.60	
PC	232+45.60	0.00	499.40	
PD	232+55.60	0.00	499.19	
PE	232+65.60	0.00	498.99	
PF	232+75.60	0.00	498.78	
PG	232+85.60	0.00	498.58	
PH	232+95.60	0.00	498.37	
PI	233+05.60	0.00	498.17	
PJ	233+15.60	0.00	497.96	
PK	233+25.60	0.00	497.76	
PL	233+35.60	0.00	497.55	
PM	233+45.60	0.00	497.35	
PN	233+55.60	0.00	497.14	
PO	233+65.60	0.00	496.93	
PP	233+75.60	0.00	496.73	
PQ	233+85.60	0.00	496.52	
PR	233+95.60	0.00	496.32	
PS	234+05.60	0.00	496.11	
PT	234+15.60	0.00	495.91	
CL Brg. Pier 15	234+21.69	0.00	495.78	
QA	234+31.69	0.00	495.58	
QB	234+41.69	0.00	495.37	
QC	234+51.69	0.00	495.17	
QD	234+61.69	0.00	494.96	
QE	234+71.69	0.00	494.76	
QF	234+81.69	0.00	494.55	
QG	234+91.69	0.00	494.34	
QH	235+01.69	0.00	494.14	
QI	235+11.69	0.00	493.93	
QJ	235+21.69	0.00	493.73	
QK	235+31.69	0.00	493.52	
QL	235+41.69	0.00	493.32	
QM	235+51.69	0.00	493.11	
QN	235+61.69	0.00	492.91	
QO	235+71.69	0.00	492.70	
CL W. Brg. Pier 16	235+83.11	0.00	492.47	
CL Pier 16 / Exp. Jt.	235+83.94	0.00	492.45	

GIRDER 4

Location	Station	Offset	Theoretical Grade Elevations	Theoretical Grade Elevations Adjusted For Dead Load Deflection and Grinding
CL E. Brg. Pier 13	230+54.19	3.00	503.29	
0A	230+64.19	3.00	503.08	
0B	230+74.19	3.00	502.88	
0C	230+84.19	3.00	502.67	
0D	230+94.19	3.00	502.46	
0E	231+04.19	3.00	502.26	
0F	231+14.19	3.00	502.05	
0G	231+24.19	3.00	501.85	See Note A
0H	231+34.19	3.00	501.64	
0I	231+44.19	3.00	501.44	
0J	231+54.19	3.00	501.23	
0K	231+64.19	3.00	501.03	
0L	231+74.19	3.00	500.82	
0M	231+84.19	3.00	500.62	
0N	231+94.19	3.00	500.41	
0O	232+04.19	3.00	500.20	
CL Brg. Pier 14	232+15.60	3.00	499.97	
PA	232+25.60	3.00	499.77	
PB	232+35.60	3.00	499.56	
PC	232+45.60	3.00	499.35	
PD	232+55.60	3.00	499.15	
PE	232+65.60	3.00	498.94	
PF	232+75.60	3.00	498.74	
PG	232+85.60	3.00	498.53	
PH	232+95.60	3.00	498.33	
PI	233+05.60	3.00	498.12	
PJ	233+15.60	3.00	497.92	
PK	233+25.60	3.00	497.71	
PL	233+35.60	3.00	497.51	
PM	233+45.60	3.00	497.30	
PN	233+55.60	3.00	497.09	
PO	233+65.60	3.00	496.89	
PP	233+75.60	3.00	496.68	
PQ	233+85.60	3.00	496.48	
PR	233+95.60	3.00	496.27	
PS	234+05.60	3.00	496.07	
PT	234+15.60	3.00	495.86	
CL Brg. Pier 15	234+21.69	3.00	495.74	
QA	234+31.69	3.00	495.53	
QB	234+41.69	3.00	495.33	
QC	234+51.69	3.00	495.12	
QD	234+61.69	3.00	494.92	
QE	234+71.69	3.00	494.71	
QF	234+81.69	3.00	494.50	
QG	234+91.69	3.00	494.30	
QH	235+01.69	3.00	494.09	
QI	235+11.69	3.00	493.89	
QJ	235+21.69	3.00	493.68	
QK	235+31.69	3.00	493.48	
QL	235+41.69	3.00	493.27	
QM	235+51.69	3.00	493.07	
QN	235+61.69	3.00	492.86	
QO	235+71.69	3.00	492.66	
CL W. Brg. Pier 16	235+83.11	3.00	492.42	
CL Pier 16 / Exp. Jt.	235+83.94	3.00	492.41	

Note A:
Theoretical Grade Elevations Adjusted for Dead Load Deflection and Grinding will be provided to the Contractor in accordance with the special provision "Contractor Requirements for Dead Load Deflection and Top of Slab Elevation Data."

MODEL: Default
FILE NAME: P:\4312-WBRtC1LugageRehab\CADD\Structural_SN 090-0115_WBMainBridge_Final Plans\0900115-68E44-047-TOSE-Spans 15-17_03.dgn

MODJESKI and MASTERS

USER NAME =	DESIGNED - YSS	REVISED -
	CHECKED - JCH	REVISED -
PLOT SCALE =	DRAWN - JJE	REVISED -
PLOT DATE =	CHECKED - YSS	REVISED -

STATE OF ILLINOIS
DEPARTMENT OF TRANSPORTATION

TOP OF SLAB ELEVATIONS - SPANS 15-17 - 3
STRUCTURE NO. 090-0115

SHEET S47 OF S214 SHEETS

F.A.P. RTE.	SECTION	COUNTY	TOTAL SHEETS	SHEET NO.
317	(15B-1)BP,BRR	PEO/TAZ	418	217
		CONTRACT NO. 68E44		
	ILLINOIS	FED. AID PROJECT		

3/13/2025 12:40:15 PM

GIRDER 5

Location	Station	Offset	Theoretical Grade Elevations	Theoretical Grade Elevations Adjusted For Dead Load Deflection and Grinding
CL E. Brg. Pier 13	230+54.19	12.00	503.15	
OA	230+64.19	12.00	502.94	
OB	230+74.19	12.00	502.74	
OC	230+84.19	12.00	502.53	
OD	230+94.19	12.00	502.32	
OE	231+04.19	12.00	502.12	
OF	231+14.19	12.00	501.91	
OG	231+24.19	12.00	501.71	See Note A
OH	231+34.19	12.00	501.50	
OI	231+44.19	12.00	501.30	
OJ	231+54.19	12.00	501.09	
OK	231+64.19	12.00	500.89	
OL	231+74.19	12.00	500.68	
OM	231+84.19	12.00	500.48	
ON	231+94.19	12.00	500.27	
OO	232+04.19	12.00	500.06	
CL Brg. Pier 14	232+15.60	12.00	499.83	
PA	232+25.60	12.00	499.63	
PB	232+35.60	12.00	499.42	
PC	232+45.60	12.00	499.21	
PD	232+55.60	12.00	499.01	
PE	232+65.60	12.00	498.80	
PF	232+75.60	12.00	498.60	
PG	232+85.60	12.00	498.39	
PH	232+95.60	12.00	498.19	
PI	233+05.60	12.00	497.98	
PJ	233+15.60	12.00	497.78	
PK	233+25.60	12.00	497.57	
PL	233+35.60	12.00	497.37	
PM	233+45.60	12.00	497.16	
PN	233+55.60	12.00	496.95	
PO	233+65.60	12.00	496.75	
PP	233+75.60	12.00	496.54	
PQ	233+85.60	12.00	496.34	
PR	233+95.60	12.00	496.13	
PS	234+05.60	12.00	495.93	
PT	234+15.60	12.00	495.72	
CL Brg. Pier 15	234+21.69	12.00	495.60	
QA	234+31.69	12.00	495.39	
QB	234+41.69	12.00	495.19	
QC	234+51.69	12.00	494.98	
QD	234+61.69	12.00	494.78	
QE	234+71.69	12.00	494.57	
QF	234+81.69	12.00	494.36	
QG	234+91.69	12.00	494.16	
QH	235+01.69	12.00	493.95	
QI	235+11.69	12.00	493.75	
QJ	235+21.69	12.00	493.54	
QK	235+31.69	12.00	493.34	
QL	235+41.69	12.00	493.13	
QM	235+51.69	12.00	492.93	
QN	235+61.69	12.00	492.72	
QO	235+71.69	12.00	492.52	
CL W. Brg. Pier 16	235+83.11	12.00	492.28	
CL Pier 16 / Exp. Jt.	235+83.94	12.00	492.27	

Note A:
Theoretical Grade Elevations Adjusted for Dead Load Deflection and Grinding will be provided to the Contractor in accordance with the special provision "Contractor Requirements for Dead Load Deflection and Top of Slab Elevation Data."

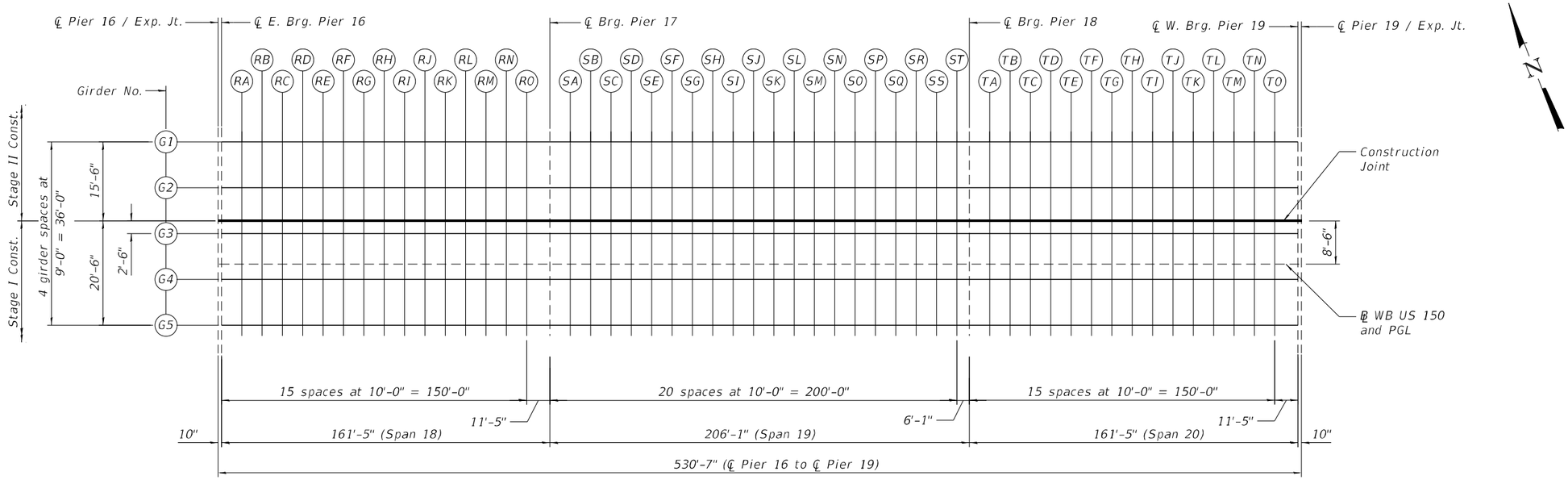

PLAN

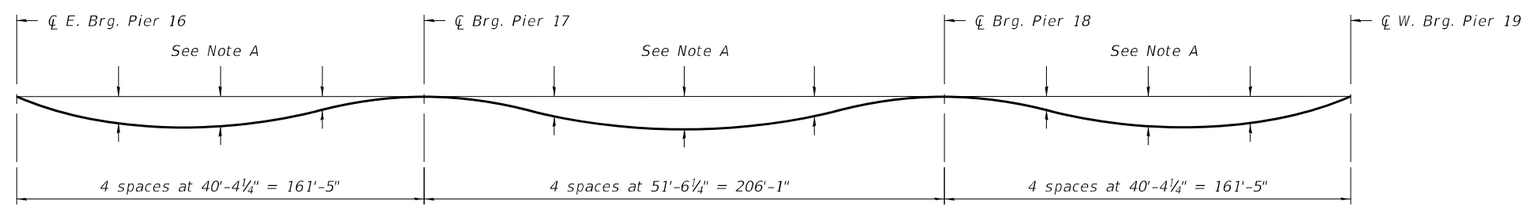

DEAD LOAD DEFLECTION DIAGRAM

Includes weight of concrete only.

Note:
The above deflections are not to be used in the field if the engineer is working from the grade elevations adjusted for dead load deflections and grinding as shown on sheets S50 thru S52 of S214.

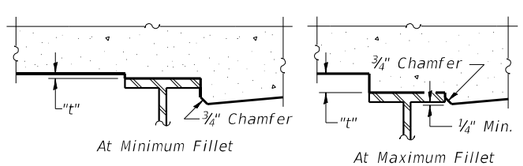

To determine "t": After all structural steel has been erected, elevations of the top flanges of the beams shall be taken at intervals shown on sheets S50 thru S52 of S214. These elevations subtracted from the "Theoretical Grade Elevations Adjusted for Dead Load Deflection and Grinding" shown on sheets S50 thru S52 of S214, minus the initial slab thickness prior to grinding, equals the fillet heights "t" above top flange of beams.

The slab is to be ground after curing to achieve smoothness, but the slab is not to be ground to elevations below the "Theoretical Grade Elevations" shown on sheets S50 thru S52 of S214. For grinding the deck, see Special Provisions.

FILLET HEIGHTS

Note A:
Dead load deflections will be provided to the Contractor in accordance with the special provision "Contractor Requirements for Dead Load Deflection and Top of Slab Elevation Data."

MODEL: PLOTSHEET-S18-S20_1
FILE NAME: P:\4312-WBMcCluggageRehab\CADD\Structural_SN 090-0115_WBMainBridge_Final Plans\0900115-68E44-049-TOSE-Spans 18-20_01.dgn

MODJESKI and MASTERS

USER NAME =	DESIGNED - YSS	REVISED -	
	CHECKED - JCH	REVISED -	
PLOT SCALE =	DRAWN - JJE	REVISED -	
PLOT DATE =	CHECKED - YSS	REVISED -	

STATE OF ILLINOIS
DEPARTMENT OF TRANSPORTATION

TOP OF SLAB ELEVATIONS - SPANS 18-20 - 1
STRUCTURE NO. 090-0115

SHEET S49 OF S214 SHEETS

F.A.P. RTE.	SECTION	COUNTY	TOTAL SHEETS	SHEET NO.
317	(15B-1)BP,BRR	PEO/TAZ	418	219

CONTRACT NO. 68E44

ILLINOIS | FED. AID PROJECT

3/13/2025 12:40:20 PM

GIRDER 1

Location	Station	Offset	Theoretical Grade Elevations	Theoretical Grade Elevations Adjusted For Dead Load Deflection and Grinding
CL E. Brg. Pier 16	235+84.77	-24.00	492.01	
RA	235+94.77	-24.00	491.81	
RB	236+04.77	-24.00	491.60	
RC	236+14.77	-24.00	491.40	
RD	236+24.77	-24.00	491.20	
RE	236+34.77	-24.00	490.99	
RF	236+44.77	-24.00	490.79	
RG	236+54.77	-24.00	490.58	See Note A
RH	236+64.77	-24.00	490.38	
RI	236+74.77	-24.00	490.17	
RJ	236+84.77	-24.00	489.97	
RK	236+94.77	-24.00	489.77	
RL	237+04.77	-24.00	489.56	
RM	237+14.77	-24.00	489.36	
RN	237+24.77	-24.00	489.15	
RO	237+34.77	-24.00	488.95	
CL Brg. Pier 17	237+46.19	-24.00	488.71	
SA	237+56.19	-24.00	488.51	
SB	237+66.19	-24.00	488.31	
SC	237+76.19	-24.00	488.10	
SD	237+86.19	-24.00	487.90	
SE	237+96.19	-24.00	487.69	
SF	238+06.19	-24.00	487.49	
SG	238+16.19	-24.00	487.28	
SH	238+26.19	-24.00	487.08	
SI	238+36.19	-24.00	486.88	
SJ	238+46.19	-24.00	486.67	
SK	238+56.19	-24.00	486.47	
SL	238+66.19	-24.00	486.26	
SM	238+76.19	-24.00	486.06	
SN	238+86.19	-24.00	485.85	
SO	238+96.19	-24.00	485.65	
SP	239+06.19	-24.00	485.45	
SQ	239+16.19	-24.00	485.24	
SR	239+26.19	-24.00	485.04	
SS	239+36.19	-24.00	484.83	
ST	239+46.19	-24.00	484.63	
CL Brg. Pier 18	239+52.27	-24.00	484.50	
TA	239+62.27	-24.00	484.30	
TB	239+72.27	-24.00	484.10	
TC	239+82.27	-24.00	483.89	
TD	239+92.27	-24.00	483.69	
TE	240+02.27	-24.00	483.48	
TF	240+12.27	-24.00	483.28	
TG	240+22.27	-24.00	483.07	
TH	240+32.27	-24.00	482.87	
TI	240+42.27	-24.00	482.67	
TJ	240+52.27	-24.00	482.46	
TK	240+62.27	-24.00	482.26	
TL	240+72.27	-24.00	482.05	
TM	240+82.27	-24.00	481.85	
TN	240+92.27	-24.00	481.64	
TO	241+02.27	-24.00	481.44	
CL W. Brg. Pier 19	241+13.69	-24.00	481.21	
CL Pier 19 / Exp. Jt.	241+14.52	-24.00	481.19	

GIRDER 2

Location	Station	Offset	Theoretical Grade Elevations	Theoretical Grade Elevations Adjusted For Dead Load Deflection and Grinding
CL E. Brg. Pier 16	235+84.77	-15.00	492.19	
RA	235+94.77	-15.00	491.99	
RB	236+04.77	-15.00	491.78	
RC	236+14.77	-15.00	491.58	
RD	236+24.77	-15.00	491.38	
RE	236+34.77	-15.00	491.17	
RF	236+44.77	-15.00	490.97	
RG	236+54.77	-15.00	490.76	See Note A
RH	236+64.77	-15.00	490.56	
RI	236+74.77	-15.00	490.35	
RJ	236+84.77	-15.00	490.15	
RK	236+94.77	-15.00	489.95	
RL	237+04.77	-15.00	489.74	
RM	237+14.77	-15.00	489.54	
RN	237+24.77	-15.00	489.33	
RO	237+34.77	-15.00	489.13	
CL Brg. Pier 17	237+46.19	-15.00	488.89	
SA	237+56.19	-15.00	488.69	
SB	237+66.19	-15.00	488.49	
SC	237+76.19	-15.00	488.28	
SD	237+86.19	-15.00	488.08	
SE	237+96.19	-15.00	487.87	
SF	238+06.19	-15.00	487.67	
SG	238+16.19	-15.00	487.46	
SH	238+26.19	-15.00	487.26	
SI	238+36.19	-15.00	487.06	
SJ	238+46.19	-15.00	486.85	
SK	238+56.19	-15.00	486.65	
SL	238+66.19	-15.00	486.44	
SM	238+76.19	-15.00	486.24	
SN	238+86.19	-15.00	486.03	
SO	238+96.19	-15.00	485.83	
SP	239+06.19	-15.00	485.63	
SQ	239+16.19	-15.00	485.42	
SR	239+26.19	-15.00	485.22	
SS	239+36.19	-15.00	485.01	
ST	239+46.19	-15.00	484.81	
CL Brg. Pier 18	239+52.27	-15.00	484.68	
TA	239+62.27	-15.00	484.48	
TB	239+72.27	-15.00	484.28	
TC	239+82.27	-15.00	484.07	
TD	239+92.27	-15.00	483.87	
TE	240+02.27	-15.00	483.66	
TF	240+12.27	-15.00	483.46	
TG	240+22.27	-15.00	483.25	
TH	240+32.27	-15.00	483.05	
TI	240+42.27	-15.00	482.85	
TJ	240+52.27	-15.00	482.64	
TK	240+62.27	-15.00	482.44	
TL	240+72.27	-15.00	482.23	
TM	240+82.27	-15.00	482.03	
TN	240+92.27	-15.00	481.82	
TO	241+02.27	-15.00	481.62	
CL W. Brg. Pier 19	241+13.69	-15.00	481.39	
CL Pier 19 / Exp. Jt.	241+14.52	-15.00	481.37	

CONSTRUCTION JOINT

Location	Station	Offset	Theoretical Grade Elevations	Theoretical Grade Elevations Adjusted For Dead Load Deflection and Grinding
CL E. Brg. Pier 16	235+84.77	-8.50	492.31	
RA	235+94.77	-8.50	492.10	
RB	236+04.77	-8.50	491.90	
RC	236+14.77	-8.50	491.69	
RD	236+24.77	-8.50	491.49	
RE	236+34.77	-8.50	491.28	
RF	236+44.77	-8.50	491.08	
RG	236+54.77	-8.50	490.88	See Note A
RH	236+64.77	-8.50	490.67	
RI	236+74.77	-8.50	490.47	
RJ	236+84.77	-8.50	490.26	
RK	236+94.77	-8.50	490.06	
RL	237+04.77	-8.50	489.85	
RM	237+14.77	-8.50	489.65	
RN	237+24.77	-8.50	489.44	
RO	237+34.77	-8.50	489.24	
CL Brg. Pier 17	237+46.19	-8.50	489.01	
SA	237+56.19	-8.50	488.80	
SB	237+66.19	-8.50	488.60	
SC	237+76.19	-8.50	488.39	
SD	237+86.19	-8.50	488.19	
SE	237+96.19	-8.50	487.99	
SF	238+06.19	-8.50	487.78	
SG	238+16.19	-8.50	487.58	
SH	238+26.19	-8.50	487.37	
SI	238+36.19	-8.50	487.17	
SJ	238+46.19	-8.50	486.96	
SK	238+56.19	-8.50	486.76	
SL	238+66.19	-8.50	486.56	
SM	238+76.19	-8.50	486.35	
SN	238+86.19	-8.50	486.15	
SO	238+96.19	-8.50	485.94	
SP	239+06.19	-8.50	485.74	
SQ	239+16.19	-8.50	485.53	
SR	239+26.19	-8.50	485.33	
SS	239+36.19	-8.50	485.13	
ST	239+46.19	-8.50	484.92	
CL Brg. Pier 18	239+52.27	-8.50	484.80	
TA	239+62.27	-8.50	484.59	
TB	239+72.27	-8.50	484.39	
TC	239+82.27	-8.50	484.18	
TD	239+92.27	-8.50	483.98	
TE	240+02.27	-8.50	483.78	
TF	240+12.27	-8.50	483.57	
TG	240+22.27	-8.50	483.37	
TH	240+32.27	-8.50	483.16	
TI	240+42.27	-8.50	482.96	
TJ	240+52.27	-8.50	482.75	
TK	240+62.27	-8.50	482.55	
TL	240+72.27	-8.50	482.34	
TM	240+82.27	-8.50	482.14	
TN	240+92.27	-8.50	481.94	
TO	241+02.27	-8.50	481.73	
CL W. Brg. Pier 19	241+13.69	-8.50	481.50	
CL Pier 19 / Exp. Jt.	241+14.52	-8.50	481.48	

Note A:
Theoretical Grade Elevations Adjusted for Dead Load Deflection and Grinding will be provided to the Contractor in accordance with the special provision "Contractor Requirements for Dead Load Deflection and Top of Slab Elevation Data."

MODEL: Default
FILE NAME: P:\4312-WBMcCLugageRehab\CADDS\Structural_SN 090-0115_WBMainBridge_Final Plans\0900115-68E44-050-TOSE-Spans 18-20_02.dgn

MODJESKI and MASTERS

USER NAME =	DESIGNED - YSS	REVISED -
	CHECKED - JCH	REVISED -
PLOT SCALE =	DRAWN - JJE	REVISED -
PLOT DATE =	CHECKED - YSS	REVISED -

STATE OF ILLINOIS
DEPARTMENT OF TRANSPORTATION

TOP OF SLAB ELEVATIONS - SPANS 18-20 - 2
STRUCTURE NO. 090-0115

SHEET S50 OF S214 SHEETS

F.A.P. RTE.	SECTION	COUNTY	TOTAL SHEETS	SHEET NO.
317	(15B-1)BP,BRR	PEO/TAZ	418	220
		CONTRACT NO. 68E44		
	ILLINOIS	FED. AID PROJECT		

3/13/2025 12:40:23 PM

GIRDER 3

Location	Station	Offset	Theoretical Grade Elevations	Theoretical Grade Elevations Adjusted For Dead Load Deflection and Grinding
CL E. Brg. Pier 16	235+84.77	-6.00	492.34	
RA	235+94.77	-6.00	492.14	
RB	236+04.77	-6.00	491.93	
RC	236+14.77	-6.00	491.73	
RD	236+24.77	-6.00	491.53	
RE	236+34.77	-6.00	491.32	
RF	236+44.77	-6.00	491.12	
RG	236+54.77	-6.00	490.91	
RH	236+64.77	-6.00	490.71	See Note A
RI	236+74.77	-6.00	490.50	
RJ	236+84.77	-6.00	490.30	
RK	236+94.77	-6.00	490.10	
RL	237+04.77	-6.00	489.89	
RM	237+14.77	-6.00	489.69	
RN	237+24.77	-6.00	489.48	
RO	237+34.77	-6.00	489.28	
CL Brg. Pier 17	237+46.19	-6.00	489.04	
SA	237+56.19	-6.00	488.84	
SB	237+66.19	-6.00	488.64	
SC	237+76.19	-6.00	488.43	
SD	237+86.19	-6.00	488.23	
SE	237+96.19	-6.00	488.02	
SF	238+06.19	-6.00	487.82	
SG	238+16.19	-6.00	487.61	
SH	238+26.19	-6.00	487.41	
SI	238+36.19	-6.00	487.21	
SJ	238+46.19	-6.00	487.00	
SK	238+56.19	-6.00	486.80	
SL	238+66.19	-6.00	486.59	
SM	238+76.19	-6.00	486.39	
SN	238+86.19	-6.00	486.18	
SO	238+96.19	-6.00	485.98	
SP	239+06.19	-6.00	485.78	
SQ	239+16.19	-6.00	485.57	
SR	239+26.19	-6.00	485.37	
SS	239+36.19	-6.00	485.16	
ST	239+46.19	-6.00	484.96	
CL Brg. Pier 18	239+52.27	-6.00	484.83	
TA	239+62.27	-6.00	484.63	
TB	239+72.27	-6.00	484.43	
TC	239+82.27	-6.00	484.22	
TD	239+92.27	-6.00	484.02	
TE	240+02.27	-6.00	483.81	
TF	240+12.27	-6.00	483.61	
TG	240+22.27	-6.00	483.40	
TH	240+32.27	-6.00	483.20	
TI	240+42.27	-6.00	483.00	
TJ	240+52.27	-6.00	482.79	
TK	240+62.27	-6.00	482.59	
TL	240+72.27	-6.00	482.38	
TM	240+82.27	-6.00	482.18	
TN	240+92.27	-6.00	481.97	
TO	241+02.27	-6.00	481.77	
CL W. Brg. Pier 19	241+13.69	-6.00	481.54	
CL Pier 19 / Exp. Jt.	241+14.52	-6.00	481.52	

℄ WB US 150 AND PG

Location	Station	Offset	Theoretical Grade Elevations	Theoretical Grade Elevations Adjusted For Dead Load Deflection and Grinding
CL E. Brg. Pier 16	235+84.77	0.00	492.43	
RA	235+94.77	0.00	492.23	
RB	236+04.77	0.00	492.02	
RC	236+14.77	0.00	491.82	
RD	236+24.77	0.00	491.62	
RE	236+34.77	0.00	491.41	
RF	236+44.77	0.00	491.21	
RG	236+54.77	0.00	491.00	
RH	236+64.77	0.00	490.80	See Note A
RI	236+74.77	0.00	490.59	
RJ	236+84.77	0.00	490.39	
RK	236+94.77	0.00	490.19	
RL	237+04.77	0.00	489.98	
RM	237+14.77	0.00	489.78	
RN	237+24.77	0.00	489.57	
RO	237+34.77	0.00	489.37	
CL Brg. Pier 17	237+46.19	0.00	489.13	
SA	237+56.19	0.00	488.93	
SB	237+66.19	0.00	488.73	
SC	237+76.19	0.00	488.52	
SD	237+86.19	0.00	488.32	
SE	237+96.19	0.00	488.11	
SF	238+06.19	0.00	487.91	
SG	238+16.19	0.00	487.70	
SH	238+26.19	0.00	487.50	
SI	238+36.19	0.00	487.30	
SJ	238+46.19	0.00	487.09	
SK	238+56.19	0.00	486.89	
SL	238+66.19	0.00	486.68	
SM	238+76.19	0.00	486.48	
SN	238+86.19	0.00	486.27	
SO	238+96.19	0.00	486.07	
SP	239+06.19	0.00	485.87	
SQ	239+16.19	0.00	485.66	
SR	239+26.19	0.00	485.46	
SS	239+36.19	0.00	485.25	
ST	239+46.19	0.00	485.05	
CL Brg. Pier 18	239+52.27	0.00	484.92	
TA	239+62.27	0.00	484.72	
TB	239+72.27	0.00	484.52	
TC	239+82.27	0.00	484.31	
TD	239+92.27	0.00	484.11	
TE	240+02.27	0.00	483.90	
TF	240+12.27	0.00	483.70	
TG	240+22.27	0.00	483.49	
TH	240+32.27	0.00	483.29	
TI	240+42.27	0.00	483.09	
TJ	240+52.27	0.00	482.88	
TK	240+62.27	0.00	482.68	
TL	240+72.27	0.00	482.47	
TM	240+82.27	0.00	482.27	
TN	240+92.27	0.00	482.06	
TO	241+02.27	0.00	481.86	
CL W. Brg. Pier 19	241+13.69	0.00	481.63	
CL Pier 19 / Exp. Jt.	241+14.52	0.00	481.61	

GIRDER 4

Location	Station	Offset	Theoretical Grade Elevations	Theoretical Grade Elevations Adjusted For Dead Load Deflection and Grinding
CL E. Brg. Pier 16	235+84.77	3.00	492.39	
RA	235+94.77	3.00	492.18	
RB	236+04.77	3.00	491.98	
RC	236+14.77	3.00	491.78	
RD	236+24.77	3.00	491.57	
RE	236+34.77	3.00	491.37	
RF	236+44.77	3.00	491.16	
RG	236+54.77	3.00	490.96	
RH	236+64.77	3.00	490.75	See Note A
RI	236+74.77	3.00	490.55	
RJ	236+84.77	3.00	490.34	
RK	236+94.77	3.00	490.14	
RL	237+04.77	3.00	489.94	
RM	237+14.77	3.00	489.73	
RN	237+24.77	3.00	489.53	
RO	237+34.77	3.00	489.32	
CL Brg. Pier 17	237+46.19	3.00	489.09	
SA	237+56.19	3.00	488.89	
SB	237+66.19	3.00	488.68	
SC	237+76.19	3.00	488.48	
SD	237+86.19	3.00	488.27	
SE	237+96.19	3.00	488.07	
SF	238+06.19	3.00	487.86	
SG	238+16.19	3.00	487.66	
SH	238+26.19	3.00	487.46	
SI	238+36.19	3.00	487.25	
SJ	238+46.19	3.00	487.05	
SK	238+56.19	3.00	486.84	
SL	238+66.19	3.00	486.64	
SM	238+76.19	3.00	486.43	
SN	238+86.19	3.00	486.23	
SO	238+96.19	3.00	486.03	
SP	239+06.19	3.00	485.82	
SQ	239+16.19	3.00	485.62	
SR	239+26.19	3.00	485.41	
SS	239+36.19	3.00	485.21	
ST	239+46.19	3.00	485.00	
CL Brg. Pier 18	239+52.27	3.00	484.88	
TA	239+62.27	3.00	484.67	
TB	239+72.27	3.00	484.47	
TC	239+82.27	3.00	484.27	
TD	239+92.27	3.00	484.06	
TE	240+02.27	3.00	483.86	
TF	240+12.27	3.00	483.65	
TG	240+22.27	3.00	483.45	
TH	240+32.27	3.00	483.24	
TI	240+42.27	3.00	483.04	
TJ	240+52.27	3.00	482.84	
TK	240+62.27	3.00	482.63	
TL	240+72.27	3.00	482.43	
TM	240+82.27	3.00	482.22	
TN	240+92.27	3.00	482.02	
TO	241+02.27	3.00	481.81	
CL W. Brg. Pier 19	241+13.69	3.00	481.58	
CL Pier 19 / Exp. Jt.	241+14.52	3.00	481.56	

Note A:
Theoretical Grade Elevations Adjusted for Dead Load Deflection and Grinding will be provided to the Contractor in accordance with the special provision "Contractor Requirements for Dead Load Deflection and Top of Slab Elevation Data."

MODEL: Default
FILE NAME: P:\4312-WBRtC1LugageRehab\CADD\Structural_SN 090-0115_WBMainBridge_Final Plans\0900115-68E44-051-TOSE-Spans 18-20_03.dgn

MODJESKI and MASTERS

USER NAME =	DESIGNED - YSS	REVISED -
	CHECKED - JCH	REVISED -
PLOT SCALE =	DRAWN - JJE	REVISED -
PLOT DATE =	CHECKED - YSS	REVISED -

STATE OF ILLINOIS
DEPARTMENT OF TRANSPORTATION

TOP OF SLAB ELEVATIONS - SPANS 18-20 - 3
STRUCTURE NO. 090-0115

SHEET S51 OF S214 SHEETS

F.A.P. RTE.	SECTION	COUNTY	TOTAL SHEETS	SHEET NO.
317	(15B-1)BP,BRR	PEO/TAZ	418	221
		CONTRACT NO. 68E44		
	ILLINOIS	FED. AID PROJECT		

3/13/2025 12:40:26 PM

GIRDER 5

Location	Station	Offset	Theoretical Grade Elevations	Theoretical Grade Elevations Adjusted For Dead Load Deflection and Grinding
CL E. Brg. Pier 16	235+84.77	12.00	492.25	
RA	235+94.77	12.00	492.04	
RB	236+04.77	12.00	491.84	
RC	236+14.77	12.00	491.64	
RD	236+24.77	12.00	491.43	
RE	236+34.77	12.00	491.23	
RF	236+44.77	12.00	491.02	
RG	236+54.77	12.00	490.82	
RH	236+64.77	12.00	490.61	See Note A
RI	236+74.77	12.00	490.41	
RJ	236+84.77	12.00	490.20	
RK	236+94.77	12.00	490.00	
RL	237+04.77	12.00	489.80	
RM	237+14.77	12.00	489.59	
RN	237+24.77	12.00	489.39	
RO	237+34.77	12.00	489.18	
CL Brg. Pier 17	237+46.19	12.00	488.95	
SA	237+56.19	12.00	488.75	
SB	237+66.19	12.00	488.54	
SC	237+76.19	12.00	488.34	
SD	237+86.19	12.00	488.13	
SE	237+96.19	12.00	487.93	
SF	238+06.19	12.00	487.72	
SG	238+16.19	12.00	487.52	
SH	238+26.19	12.00	487.32	
SI	238+36.19	12.00	487.11	
SJ	238+46.19	12.00	486.91	
SK	238+56.19	12.00	486.70	
SL	238+66.19	12.00	486.50	
SM	238+76.19	12.00	486.29	
SN	238+86.19	12.00	486.09	
SO	238+96.19	12.00	485.89	
SP	239+06.19	12.00	485.68	
SQ	239+16.19	12.00	485.48	
SR	239+26.19	12.00	485.27	
SS	239+36.19	12.00	485.07	
ST	239+46.19	12.00	484.86	
CL Brg. Pier 18	239+52.27	12.00	484.74	
TA	239+62.27	12.00	484.53	
TB	239+72.27	12.00	484.33	
TC	239+82.27	12.00	484.13	
TD	239+92.27	12.00	483.92	
TE	240+02.27	12.00	483.72	
TF	240+12.27	12.00	483.51	
TG	240+22.27	12.00	483.31	
TH	240+32.27	12.00	483.10	
TI	240+42.27	12.00	482.90	
TJ	240+52.27	12.00	482.70	
TK	240+62.27	12.00	482.49	
TL	240+72.27	12.00	482.29	
TM	240+82.27	12.00	482.08	
TN	240+92.27	12.00	481.88	
TO	241+02.27	12.00	481.67	
CL W. Brg. Pier 19	241+13.69	12.00	481.44	
CL Pier 19 / Exp. Jt.	241+14.52	12.00	481.42	

Note A:
Theoretical Grade Elevations Adjusted for Dead Load Deflection and Grinding will be provided to the Contractor in accordance with the special provision "Contractor Requirements for Dead Load Deflection and Top of Slab Elevation Data."

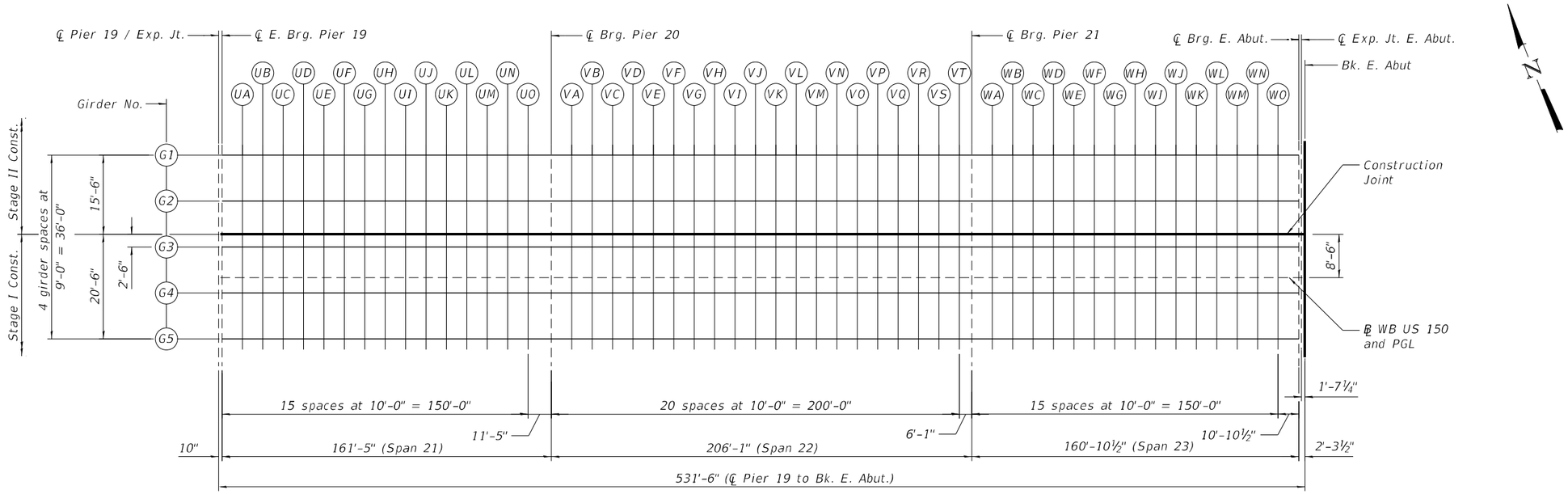

PLAN

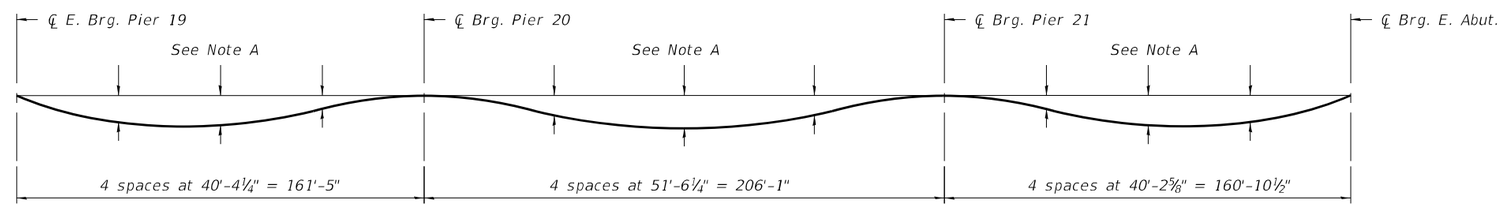

DEAD LOAD DEFLECTION DIAGRAM

Includes weight of concrete only.

Note:
The above deflections are not to be used in the field if the engineer is working from the grade elevations adjusted for dead load deflections and grinding as shown on sheets S54 thru S56 of S214.

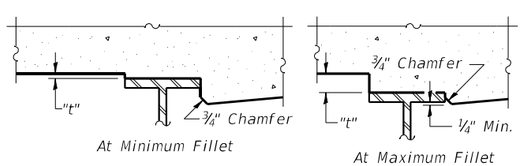

To determine "t": After all structural steel has been erected, elevations of the top flanges of the beams shall be taken at intervals shown on sheets S54 thru S56 of S214. These elevations subtracted from the "Theoretical Grade Elevations Adjusted for Dead Load Deflection and Grinding" shown on sheets S54 thru S56 of S214, minus the initial slab thickness prior to grinding, equals the fillet heights "t" above top flange of beams.

The slab is to be ground after curing to achieve smoothness, but the slab is not to be ground to elevations below the "Theoretical Grade Elevations" shown on sheets S54 thru S56 of S214. For grinding the deck, see Special Provisions.

FILLET HEIGHTS

Note A:
Dead load deflections will be provided to the Contractor in accordance with the special provision "Contractor Requirements for Dead Load Deflection and Top of Slab Elevation Data."

MODEL: PLOTSHEET-S21-S23_1
FILE NAME: P:\4312-WBMcClugageRehab\CADD\Structural_SN 090-0115_WBMainBridge_Final Plans\0900115-68E44-053-TOSE-Spans 21-23_01.dgn

MODJESKI and MASTERS	USER NAME =	DESIGNED - YSS	REVISED -
		CHECKED - JCH	REVISED -
	PLOT SCALE =	DRAWN - JJE	REVISED -
	PLOT DATE =	CHECKED - YSS	REVISED -

STATE OF ILLINOIS
DEPARTMENT OF TRANSPORTATION

TOP OF SLAB ELEVATIONS - SPANS 21-23 - 1
STRUCTURE NO. 090-0115

SHEET S53 OF S214 SHEETS

F.A.P. RTE.	SECTION	COUNTY	TOTAL SHEETS	SHEET NO.
317	(15B-1)BP,BRR	PEO/TAZ	418	223
		CONTRACT NO. 68E44		
		ILLINOIS	FED. AID PROJECT	

3/13/2025 12:40:32 PM

GIRDER 1

Location	Station	Offset	Theoretical Grade Elevations	Theoretical Grade Elevations Adjusted For Dead Load Deflection and Grinding
CL E. Brg. Pier 19	241+15.35	-24.00	481.17	
UA	241+25.35	-24.00	480.97	
UB	241+35.35	-24.00	480.76	
UC	241+45.35	-24.00	480.56	
UD	241+55.35	-24.00	480.35	
UE	241+65.35	-24.00	480.15	
UF	241+75.35	-24.00	479.95	
UG	241+85.35	-24.00	479.74	
UH	241+95.35	-24.00	479.54	
UI	242+05.35	-24.00	479.33	See Note A
UJ	242+15.35	-24.00	479.13	
UK	242+25.35	-24.00	478.92	
UL	242+35.35	-24.00	478.72	
UM	242+45.35	-24.00	478.52	
UN	242+55.35	-24.00	478.31	
UO	242+65.35	-24.00	478.11	
CL Brg. Pier 20	242+76.77	-24.00	477.87	
VA	242+86.77	-24.00	477.67	
VB	242+96.77	-24.00	477.47	
VC	243+06.77	-24.00	477.26	
VD	243+16.77	-24.00	477.06	
VE	243+26.77	-24.00	476.85	
VF	243+36.77	-24.00	476.65	
VG	243+46.77	-24.00	476.44	
VH	243+56.77	-24.00	476.24	
VI	243+66.77	-24.00	476.04	
VJ	243+76.77	-24.00	475.83	
VK	243+86.77	-24.00	475.63	
VL	243+96.77	-24.00	475.42	
VM	244+06.77	-24.00	475.22	
VN	244+16.77	-24.00	475.01	
VO	244+26.77	-24.00	474.81	
VP	244+36.77	-24.00	474.60	
VQ	244+46.77	-24.00	474.40	
VR	244+56.77	-24.00	474.20	
VS	244+66.77	-24.00	473.99	
VT	244+76.77	-24.00	473.79	
CL Brg. Pier 21	244+82.85	-24.00	473.66	
WA	244+92.85	-24.00	473.46	
WB	245+02.85	-24.00	473.25	
WC	245+12.85	-24.00	473.05	
WD	245+22.85	-24.00	472.85	
WE	245+32.85	-24.00	472.64	
WF	245+42.85	-24.00	472.44	
WG	245+52.85	-24.00	472.23	
WH	245+62.85	-24.00	472.03	
WI	245+72.85	-24.00	471.82	
WJ	245+82.85	-24.00	471.62	
WK	245+92.85	-24.00	471.42	
WL	246+02.85	-24.00	471.21	
WM	246+12.85	-24.00	471.01	
WN	246+22.85	-24.00	470.80	
WO	246+32.85	-24.00	470.60	
CL Brg. E. Abut.	246+43.73	-24.00	470.38	
CL Exp. Jt. E. Abut.	246+44.42	-24.00	470.36	
Bk. E. Abut.	246+46.02	-24.00	470.33	

GIRDER 2

Location	Station	Offset	Theoretical Grade Elevations	Theoretical Grade Elevations Adjusted For Dead Load Deflection and Grinding
CL E. Brg. Pier 19	241+15.35	-15.00	481.35	
UA	241+25.35	-15.00	481.15	
UB	241+35.35	-15.00	480.94	
UC	241+45.35	-15.00	480.74	
UD	241+55.35	-15.00	480.53	
UE	241+65.35	-15.00	480.33	
UF	241+75.35	-15.00	480.13	
UG	241+85.35	-15.00	479.92	
UH	241+95.35	-15.00	479.72	
UI	242+05.35	-15.00	479.51	See Note A
UJ	242+15.35	-15.00	479.31	
UK	242+25.35	-15.00	479.10	
UL	242+35.35	-15.00	478.90	
UM	242+45.35	-15.00	478.70	
UN	242+55.35	-15.00	478.49	
UO	242+65.35	-15.00	478.29	
CL Brg. Pier 20	242+76.77	-15.00	478.05	
VA	242+86.77	-15.00	477.85	
VB	242+96.77	-15.00	477.65	
VC	243+06.77	-15.00	477.44	
VD	243+16.77	-15.00	477.24	
VE	243+26.77	-15.00	477.03	
VF	243+36.77	-15.00	476.83	
VG	243+46.77	-15.00	476.62	
VH	243+56.77	-15.00	476.42	
VI	243+66.77	-15.00	476.22	
VJ	243+76.77	-15.00	476.01	
VK	243+86.77	-15.00	475.81	
VL	243+96.77	-15.00	475.60	
VM	244+06.77	-15.00	475.40	
VN	244+16.77	-15.00	475.19	
VO	244+26.77	-15.00	474.99	
VP	244+36.77	-15.00	474.78	
VQ	244+46.77	-15.00	474.58	
VR	244+56.77	-15.00	474.38	
VS	244+66.77	-15.00	474.17	
VT	244+76.77	-15.00	473.97	
CL Brg. Pier 21	244+82.85	-15.00	473.84	
WA	244+92.85	-15.00	473.64	
WB	245+02.85	-15.00	473.43	
WC	245+12.85	-15.00	473.23	
WD	245+22.85	-15.00	473.03	
WE	245+32.85	-15.00	472.82	
WF	245+42.85	-15.00	472.62	
WG	245+52.85	-15.00	472.41	
WH	245+62.85	-15.00	472.21	
WI	245+72.85	-15.00	472.00	
WJ	245+82.85	-15.00	471.80	
WK	245+92.85	-15.00	471.60	
WL	246+02.85	-15.00	471.39	
WM	246+12.85	-15.00	471.19	
WN	246+22.85	-15.00	470.98	
WO	246+32.85	-15.00	470.78	
CL Brg. E. Abut.	246+43.73	-15.00	470.56	
CL Exp. Jt. E. Abut.	246+44.42	-15.00	470.54	
Bk. E. Abut.	246+46.02	-15.00	470.51	

CONSTRUCTION JOINT

Location	Station	Offset	Theoretical Grade Elevations	Theoretical Grade Elevations Adjusted For Dead Load Deflection and Grinding
CL E. Brg. Pier 19	241+15.35	-8.50	481.46	
UA	241+25.35	-8.50	481.26	
UB	241+35.35	-8.50	481.06	
UC	241+45.35	-8.50	480.85	
UD	241+55.35	-8.50	480.65	
UE	241+65.35	-8.50	480.44	
UF	241+75.35	-8.50	480.24	
UG	241+85.35	-8.50	480.03	
UH	241+95.35	-8.50	479.83	
UI	242+05.35	-8.50	479.63	See Note A
UJ	242+15.35	-8.50	479.42	
UK	242+25.35	-8.50	479.22	
UL	242+35.35	-8.50	479.01	
UM	242+45.35	-8.50	478.81	
UN	242+55.35	-8.50	478.60	
UO	242+65.35	-8.50	478.40	
CL Brg. Pier 20	242+76.77	-8.50	478.17	
VA	242+86.77	-8.50	477.96	
VB	242+96.77	-8.50	477.76	
VC	243+06.77	-8.50	477.55	
VD	243+16.77	-8.50	477.35	
VE	243+26.77	-8.50	477.14	
VF	243+36.77	-8.50	476.94	
VG	243+46.77	-8.50	476.74	
VH	243+56.77	-8.50	476.53	
VI	243+66.77	-8.50	476.33	
VJ	243+76.77	-8.50	476.12	
VK	243+86.77	-8.50	475.92	
VL	243+96.77	-8.50	475.71	
VM	244+06.77	-8.50	475.51	
VN	244+16.77	-8.50	475.31	
VO	244+26.77	-8.50	475.10	
VP	244+36.77	-8.50	474.90	
VQ	244+46.77	-8.50	474.69	
VR	244+56.77	-8.50	474.49	
VS	244+66.77	-8.50	474.28	
VT	244+76.77	-8.50	474.08	
CL Brg. Pier 21	244+82.85	-8.50	473.96	
WA	244+92.85	-8.50	473.75	
WB	245+02.85	-8.50	473.55	
WC	245+12.85	-8.50	473.34	
WD	245+22.85	-8.50	473.14	
WE	245+32.85	-8.50	472.93	
WF	245+42.85	-8.50	472.73	
WG	245+52.85	-8.50	472.53	
WH	245+62.85	-8.50	472.32	
WI	245+72.85	-8.50	472.12	
WJ	245+82.85	-8.50	471.91	
WK	245+92.85	-8.50	471.71	
WL	246+02.85	-8.50	471.50	
WM	246+12.85	-8.50	471.30	
WN	246+22.85	-8.50	471.10	
WO	246+32.85	-8.50	470.89	
CL Brg. E. Abut.	246+43.73	-8.50	470.67	
CL Exp. Jt. E. Abut.	246+44.42	-8.50	470.65	
Bk. E. Abut.	246+46.02	-8.50	470.62	

Note A:
Theoretical Grade Elevations Adjusted for Dead Load Deflection and Grinding will be provided to the Contractor in accordance with the special provision "Contractor Requirements for Dead Load Deflection and Top of Slab Elevation Data."

GIRDER 3

Location	Station	Offset	Theoretical Grade Elevations	Theoretical Grade Elevations Adjusted For Dead Load Deflection and Grinding
CL E. Brg. Pier 19	241+15.35	-6.00	481.50	
UA	241+25.35	-6.00	481.30	
UB	241+35.35	-6.00	481.09	
UC	241+45.35	-6.00	480.89	
UD	241+55.35	-6.00	480.68	
UE	241+65.35	-6.00	480.48	
UF	241+75.35	-6.00	480.28	
UG	241+85.35	-6.00	480.07	See Note A
UH	241+95.35	-6.00	479.87	
UI	242+05.35	-6.00	479.66	
UJ	242+15.35	-6.00	479.46	
UK	242+25.35	-6.00	479.25	
UL	242+35.35	-6.00	479.05	
UM	242+45.35	-6.00	478.85	
UN	242+55.35	-6.00	478.64	
UO	242+65.35	-6.00	478.44	
CL Brg. Pier 20	242+76.77	-6.00	478.20	
VA	242+86.77	-6.00	478.00	
VB	242+96.77	-6.00	477.80	
VC	243+06.77	-6.00	477.59	
VD	243+16.77	-6.00	477.39	
VE	243+26.77	-6.00	477.18	
VF	243+36.77	-6.00	476.98	
VG	243+46.77	-6.00	476.77	
VH	243+56.77	-6.00	476.57	
VI	243+66.77	-6.00	476.37	
VJ	243+76.77	-6.00	476.16	
VK	243+86.77	-6.00	475.96	
VL	243+96.77	-6.00	475.75	
VM	244+06.77	-6.00	475.55	
VN	244+16.77	-6.00	475.34	
VO	244+26.77	-6.00	475.14	
VP	244+36.77	-6.00	474.93	
VQ	244+46.77	-6.00	474.73	
VR	244+56.77	-6.00	474.53	
VS	244+66.77	-6.00	474.32	
VT	244+76.77	-6.00	474.12	
CL Brg. Pier 21	244+82.85	-6.00	473.99	
WA	244+92.85	-6.00	473.79	
WB	245+02.85	-6.00	473.58	
WC	245+12.85	-6.00	473.38	
WD	245+22.85	-6.00	473.18	
WE	245+32.85	-6.00	472.97	
WF	245+42.85	-6.00	472.77	
WG	245+52.85	-6.00	472.56	
WH	245+62.85	-6.00	472.36	
WI	245+72.85	-6.00	472.15	
WJ	245+82.85	-6.00	471.95	
WK	245+92.85	-6.00	471.75	
WL	246+02.85	-6.00	471.54	
WM	246+12.85	-6.00	471.34	
WN	246+22.85	-6.00	471.13	
WO	246+32.85	-6.00	470.93	
CL Brg. E. Abut.	246+43.73	-6.00	470.71	
CL Exp. Jt. E. Abut.	246+44.42	-6.00	470.69	
Bk. E. Abut.	246+46.02	-6.00	470.66	

℄ WB US 150 AND PG

Location	Station	Offset	Theoretical Grade Elevations	Theoretical Grade Elevations Adjusted For Dead Load Deflection and Grinding
CL E. Brg. Pier 19	241+15.35	0.00	481.59	
UA	241+25.35	0.00	481.39	
UB	241+35.35	0.00	481.18	
UC	241+45.35	0.00	480.98	
UD	241+55.35	0.00	480.77	
UE	241+65.35	0.00	480.57	
UF	241+75.35	0.00	480.37	
UG	241+85.35	0.00	480.16	See Note A
UH	241+95.35	0.00	479.96	
UI	242+05.35	0.00	479.75	
UJ	242+15.35	0.00	479.55	
UK	242+25.35	0.00	479.34	
UL	242+35.35	0.00	479.14	
UM	242+45.35	0.00	478.94	
UN	242+55.35	0.00	478.73	
UO	242+65.35	0.00	478.53	
CL Brg. Pier 20	242+76.77	0.00	478.29	
VA	242+86.77	0.00	478.09	
VB	242+96.77	0.00	477.89	
VC	243+06.77	0.00	477.68	
VD	243+16.77	0.00	477.48	
VE	243+26.77	0.00	477.27	
VF	243+36.77	0.00	477.07	
VG	243+46.77	0.00	476.86	
VH	243+56.77	0.00	476.66	
VI	243+66.77	0.00	476.46	
VJ	243+76.77	0.00	476.25	
VK	243+86.77	0.00	476.05	
VL	243+96.77	0.00	475.84	
VM	244+06.77	0.00	475.64	
VN	244+16.77	0.00	475.43	
VO	244+26.77	0.00	475.23	
VP	244+36.77	0.00	475.02	
VQ	244+46.77	0.00	474.82	
VR	244+56.77	0.00	474.62	
VS	244+66.77	0.00	474.41	
VT	244+76.77	0.00	474.21	
CL Brg. Pier 21	244+82.85	0.00	474.08	
WA	244+92.85	0.00	473.88	
WB	245+02.85	0.00	473.67	
WC	245+12.85	0.00	473.47	
WD	245+22.85	0.00	473.27	
WE	245+32.85	0.00	473.06	
WF	245+42.85	0.00	472.86	
WG	245+52.85	0.00	472.65	
WH	245+62.85	0.00	472.45	
WI	245+72.85	0.00	472.24	
WJ	245+82.85	0.00	472.04	
WK	245+92.85	0.00	471.84	
WL	246+02.85	0.00	471.63	
WM	246+12.85	0.00	471.43	
WN	246+22.85	0.00	471.22	
WO	246+32.85	0.00	471.02	
CL Brg. E. Abut.	246+43.73	0.00	470.80	
CL Exp. Jt. E. Abut.	246+44.42	0.00	470.78	
Bk. E. Abut.	246+46.02	0.00	470.75	

GIRDER 4

Location	Station	Offset	Theoretical Grade Elevations	Theoretical Grade Elevations Adjusted For Dead Load Deflection and Grinding
CL E. Brg. Pier 19	241+15.35	3.00	481.55	
UA	241+25.35	3.00	481.34	
UB	241+35.35	3.00	481.14	
UC	241+45.35	3.00	480.93	
UD	241+55.35	3.00	480.73	
UE	241+65.35	3.00	480.53	
UF	241+75.35	3.00	480.32	
UG	241+85.35	3.00	480.12	See Note A
UH	241+95.35	3.00	479.91	
UI	242+05.35	3.00	479.71	
UJ	242+15.35	3.00	479.50	
UK	242+25.35	3.00	479.30	
UL	242+35.35	3.00	479.10	
UM	242+45.35	3.00	478.89	
UN	242+55.35	3.00	478.69	
UO	242+65.35	3.00	478.48	
CL Brg. Pier 20	242+76.77	3.00	478.25	
VA	242+86.77	3.00	478.04	
VB	242+96.77	3.00	477.84	
VC	243+06.77	3.00	477.64	
VD	243+16.77	3.00	477.43	
VE	243+26.77	3.00	477.23	
VF	243+36.77	3.00	477.02	
VG	243+46.77	3.00	476.82	
VH	243+56.77	3.00	476.61	
VI	243+66.77	3.00	476.41	
VJ	243+76.77	3.00	476.21	
VK	243+86.77	3.00	476.00	
VL	243+96.77	3.00	475.80	
VM	244+06.77	3.00	475.59	
VN	244+16.77	3.00	475.39	
VO	244+26.77	3.00	475.18	
VP	244+36.77	3.00	474.98	
VQ	244+46.77	3.00	474.78	
VR	244+56.77	3.00	474.57	
VS	244+66.77	3.00	474.37	
VT	244+76.77	3.00	474.16	
CL Brg. Pier 21	244+82.85	3.00	474.04	
WA	244+92.85	3.00	473.83	
WB	245+02.85	3.00	473.63	
WC	245+12.85	3.00	473.43	
WD	245+22.85	3.00	473.22	
WE	245+32.85	3.00	473.02	
WF	245+42.85	3.00	472.81	
WG	245+52.85	3.00	472.61	
WH	245+62.85	3.00	472.40	
WI	245+72.85	3.00	472.20	
WJ	245+82.85	3.00	472.00	
WK	245+92.85	3.00	471.79	
WL	246+02.85	3.00	471.59	
WM	246+12.85	3.00	471.38	
WN	246+22.85	3.00	471.18	
WO	246+32.85	3.00	470.97	
CL Brg. E. Abut.	246+43.73	3.00	470.75	
CL Exp. Jt. E. Abut.	246+44.42	3.00	470.74	
Bk. E. Abut.	246+46.02	3.00	470.70	

Note A:
Theoretical Grade Elevations Adjusted for Dead Load Deflection and Grinding will be provided to the Contractor in accordance with the special provision "Contractor Requirements for Dead Load Deflection and Top of Slab Elevation Data."

MODEL: Default
FILE NAME: P:\4312-WBRtC1LugageRehab\CADDStructural_SN 090-0115_WBMainBridge_Final Plans\0900115-68E44-055-TOSE-Spans 21-23_03.dgn

MODJESKI and MASTERS

USER NAME =	DESIGNED - YSS	REVISED -	
	CHECKED - JCH	REVISED -	
PLOT SCALE =	DRAWN - JJE	REVISED -	
PLOT DATE =	CHECKED - YSS	REVISED -	

STATE OF ILLINOIS
DEPARTMENT OF TRANSPORTATION

TOP OF SLAB ELEVATIONS - SPANS 21-23 - 3
STRUCTURE NO. 090-0115

SHEET S55 OF S214 SHEETS

F.A.P. RTE.	SECTION	COUNTY	TOTAL SHEETS	SHEET NO.
317	(15B-1)BP,BRR	PEO/TAZ	418	225

CONTRACT NO. 68E44

ILLINOIS | FED. AID PROJECT

3/13/2025 12:40:46 PM

GIRDER 5

Location	Station	Offset	Theoretical Grade Elevations	Theoretical Grade Elevations Adjusted For Dead Load Deflection and Grinding
CL E. Brg. Pier 19	241+15.35	12.00	481.41	
UA	241+25.35	12.00	481.20	
UB	241+35.35	12.00	481.00	
UC	241+45.35	12.00	480.79	
UD	241+55.35	12.00	480.59	
UE	241+65.35	12.00	480.39	
UF	241+75.35	12.00	480.18	
UG	241+85.35	12.00	479.98	
UH	241+95.35	12.00	479.77	See Note A
UI	242+05.35	12.00	479.57	
UJ	242+15.35	12.00	479.36	
UK	242+25.35	12.00	479.16	
UL	242+35.35	12.00	478.96	
UM	242+45.35	12.00	478.75	
UN	242+55.35	12.00	478.55	
UO	242+65.35	12.00	478.34	
CL Brg. Pier 20	242+76.77	12.00	478.11	
VA	242+86.77	12.00	477.90	
VB	242+96.77	12.00	477.70	
VC	243+06.77	12.00	477.50	
VD	243+16.77	12.00	477.29	
VE	243+26.77	12.00	477.09	
VF	243+36.77	12.00	476.88	
VG	243+46.77	12.00	476.68	
VH	243+56.77	12.00	476.47	
VI	243+66.77	12.00	476.27	
VJ	243+76.77	12.00	476.07	
VK	243+86.77	12.00	475.86	
VL	243+96.77	12.00	475.66	
VM	244+06.77	12.00	475.45	
VN	244+16.77	12.00	475.25	
VO	244+26.77	12.00	475.04	
VP	244+36.77	12.00	474.84	
VQ	244+46.77	12.00	474.64	
VR	244+56.77	12.00	474.43	
VS	244+66.77	12.00	474.23	
VT	244+76.77	12.00	474.02	
CL Brg. Pier 21	244+82.85	12.00	473.90	
WA	244+92.85	12.00	473.69	
WB	245+02.85	12.00	473.49	
WC	245+12.85	12.00	473.29	
WD	245+22.85	12.00	473.08	
WE	245+32.85	12.00	472.88	
WF	245+42.85	12.00	472.67	
WG	245+52.85	12.00	472.47	
WH	245+62.85	12.00	472.26	
WI	245+72.85	12.00	472.06	
WJ	245+82.85	12.00	471.86	
WK	245+92.85	12.00	471.65	
WL	246+02.85	12.00	471.45	
WM	246+12.85	12.00	471.24	
WN	246+22.85	12.00	471.04	
WO	246+32.85	12.00	470.83	
CL Brg. E. Abut.	246+43.73	12.00	470.61	
CL Exp. Jt. E. Abut.	246+44.42	12.00	470.60	
Bk. E. Abut.	246+46.02	12.00	470.56	

Note A:
Theoretical Grade Elevations Adjusted for Dead Load Deflection and Grinding will be provided to the Contractor in accordance with the special provision "Contractor Requirements for Dead Load Deflection and Top of Slab Elevation Data."

NORTH EDGE OF SHOULDER

Location	Station	Offset	Theoretical Grade Elevations	Theoretical Grade Elevations Adjusted For Grinding
W. End West Appr. Pav't.	12+25.06	9.59	504.38	504.40
A1	12+15.05	9.36	504.14	504.17
A2	12+05.04	9.13	503.91	503.93
E. End West Appr. Pav't.	11+95.03	8.92	503.67	503.69

NORTH EDGE OF PAVEMENT / ℄ RAMP D AND PG

Location	Station	Offset	Theoretical Grade Elevations	Theoretical Grade Elevations Adjusted For Grinding
W. End West Appr. Pav't.	12+24.60	0.00	504.56	504.58
A1	12+14.58	0.00	504.32	504.34
A2	12+04.57	0.00	504.08	504.10
E. End West Appr. Pav't.	11+94.56	0.00	503.84	503.86

NORTH EDGE OF MEDIAN

Location	Station	Offset	Theoretical Grade Elevations	Theoretical Grade Elevations Adjusted For Grinding
W. End West Appr. Pav't.	12+23.82	-16.00	504.86	504.88
A1	12+13.78	-16.00	504.62	504.64
A2	12+03.74	-16.00	504.38	504.40
E. End West Appr. Pav't.	11+93.70	-16.00	504.14	504.16

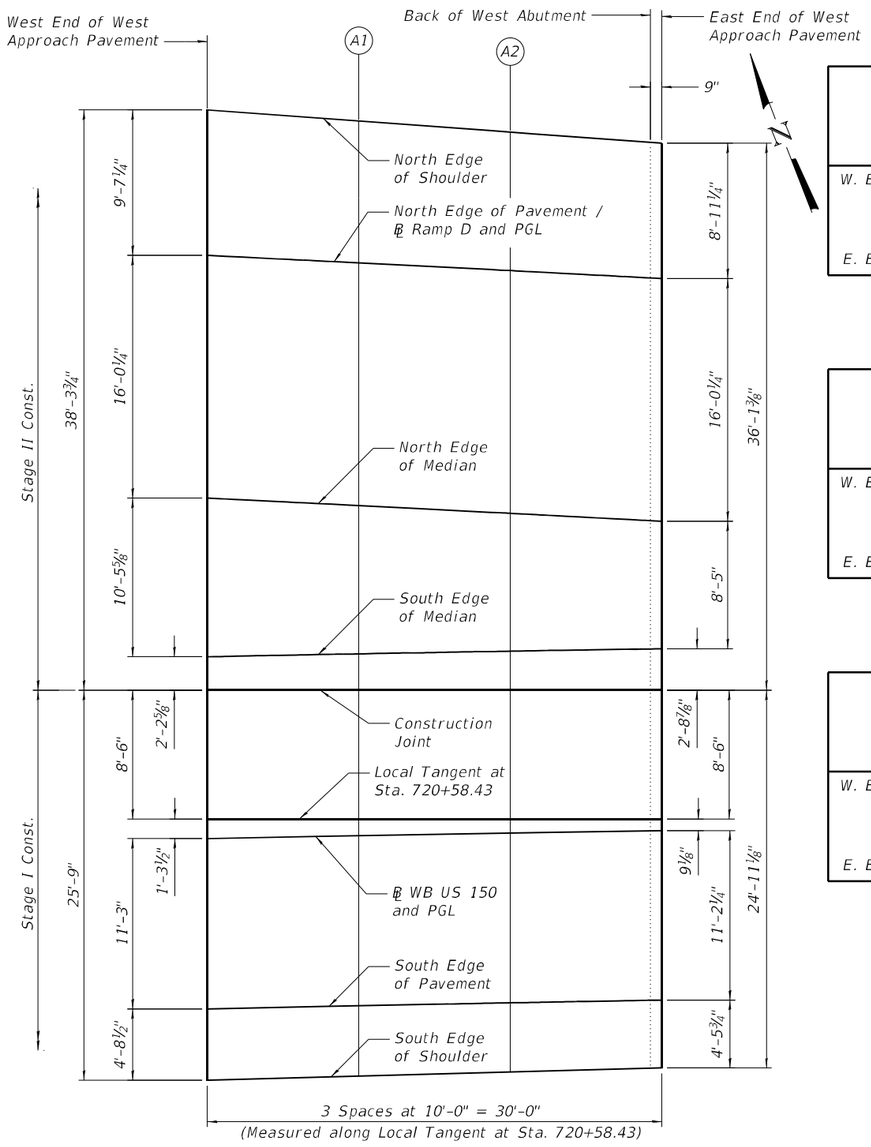

PLAN - WEST APPROACH

SOUTH EDGE OF MEDIAN

Location	Station	Offset	Theoretical Grade Elevations	Theoretical Grade Elevations Adjusted For Grinding
W. End West Appr. Pav't.	719+29.36	-12.00	504.91	504.93
A1	719+39.34	-12.00	504.66	504.68
A2	719+49.32	-12.00	504.41	504.43
E. End West Appr. Pav't.	719+59.31	-12.00	504.16	504.18

CONSTRUCTION JOINT

Location	Station	Offset	Theoretical Grade Elevations	Theoretical Grade Elevations Adjusted For Grinding
W. End West Appr. Pav't.	719+29.31	-9.78	504.94	504.97
A1	719+39.30	-9.59	504.70	504.72
A2	719+49.28	-9.42	504.45	504.47
E. End West Appr. Pav't.	719+59.26	-9.26	504.20	504.23

LOCAL TANGENT AT STA. 720+58.43

Location	Station	Offset	Theoretical Grade Elevations	Theoretical Grade Elevations Adjusted For Grinding
W. End West Appr. Pav't.	719+29.14	-1.29	505.08	505.10
A1	719+39.14	-1.09	504.83	504.85
A2	719+49.14	-0.92	504.58	504.60
E. End West Appr. Pav't.	719+59.13	-0.76	504.33	504.36

℄ WB US 150 AND PG

Location	Station	Offset	Theoretical Grade Elevations	Theoretical Grade Elevations Adjusted For Grinding
W. End West Appr. Pav't.	719+29.12	0.00	505.10	505.12
A1	719+39.12	0.00	504.85	504.87
A2	719+49.12	0.00	504.60	504.62
E. End West Appr. Pav't.	719+59.12	0.00	504.35	504.37

SOUTH EDGE OF PAVEMENT

Location	Station	Offset	Theoretical Grade Elevations	Theoretical Grade Elevations Adjusted For Grinding
W. End West Appr. Pav't.	719+28.89	11.24	504.93	504.95
A1	719+38.91	11.23	504.68	504.70
A2	719+48.93	11.21	504.43	504.45
E. End West Appr. Pav't.	719+58.95	11.19	504.18	504.20

SOUTH EDGE OF SHOULDER

Location	Station	Offset	Theoretical Grade Elevations	Theoretical Grade Elevations Adjusted For Grinding
W. End West Appr. Pav't.	719+28.80	15.96	504.84	504.86
A1	719+38.83	15.87	504.59	504.61
A2	719+48.85	15.78	504.34	504.36
E. End West Appr. Pav't.	719+58.88	15.67	504.10	504.12

Note:
Offsets for the north edges of the shoulder, pavement, and median are measured from the Profile Grade for ℄ Ramp D. Offsets for the construction joint and south edge of the median, pavement, and shoulder are measured from the Profile Grade for ℄ WB US 150.

MODEL: Default
FILE NAME: P:\4312-WBR&CLugageRehab\CADD\Structural_SN 090-0115_WBMainBridge_Final Plans\0900115-68E44-057-TOSE_WARP1.dgn
3/13/2025 2:54:42 PM

MODJESKI and MASTERS

USER NAME =	DESIGNED - YSS	REVISED -	
	CHECKED - UB	REVISED -	
PLOT SCALE =	DRAWN - JJE	REVISED -	
PLOT DATE =	CHECKED - YSS	REVISED -	

STATE OF ILLINOIS
DEPARTMENT OF TRANSPORTATION

TOP OF APPROACH SLAB ELEVATIONS - 1
STRUCTURE NO. 090-0115

SHEET S57 OF S214 SHEETS

F.A.P. RTE.	SECTION	COUNTY	TOTAL SHEETS	SHEET NO.
317	(15B-1)BP,BRR	PEO/TAZ	418	227

CONTRACT NO. 68E44

ILLINOIS | FED. AID PROJECT

NORTH EDGE OF SHOULDER

Location	Station	Offset	Theoretical Grade Elevations	Theoretical Grade Elevations Adjusted For Grinding
W. End East Appr. Pav't.	246+44.52	-26.08	470.32	470.34
A3	246+54.52	-26.08	470.11	470.13
A4	246+64.52	-26.08	469.91	469.93
E. End East Appr. Pav't.	246+74.52	-26.08	469.70	469.72

NORTH EDGE OF PAVEMENT

Location	Station	Offset	Theoretical Grade Elevations	Theoretical Grade Elevations Adjusted For Grinding
W. End East Appr. Pav't.	246+44.52	-23.00	470.38	470.40
A3	246+54.52	-23.00	470.17	470.20
A4	246+64.52	-23.00	469.97	469.99
E. End East Appr. Pav't.	246+74.52	-23.00	469.76	469.79

NORTH EDGE OF MIDDLE LANE

Location	Station	Offset	Theoretical Grade Elevations	Theoretical Grade Elevations Adjusted For Grinding
W. End East Appr. Pav't.	246+44.52	-12.00	470.60	470.62
A3	246+54.52	-12.00	470.39	470.42
A4	246+64.52	-12.00	470.19	470.21
E. End East Appr. Pav't.	246+74.52	-12.00	469.98	470.01

CONSTRUCTION JOINT

Location	Station	Offset	Theoretical Grade Elevations	Theoretical Grade Elevations Adjusted For Grinding
W. End East Appr. Pav't.	246+44.52	-8.50	470.65	470.67
A3	246+54.52	-8.50	470.45	470.47
A4	246+64.52	-8.50	470.24	470.26
E. End East Appr. Pav't.	246+74.52	-8.50	470.04	470.06

℄ WB US 150 AND PG

Location	Station	Offset	Theoretical Grade Elevations	Theoretical Grade Elevations Adjusted For Grinding
W. End East Appr. Pav't.	246+44.52	0.00	470.78	470.80
A3	246+54.52	0.00	470.57	470.60
A4	246+64.52	0.00	470.37	470.39
E. End East Appr. Pav't.	246+74.52	0.00	470.16	470.19

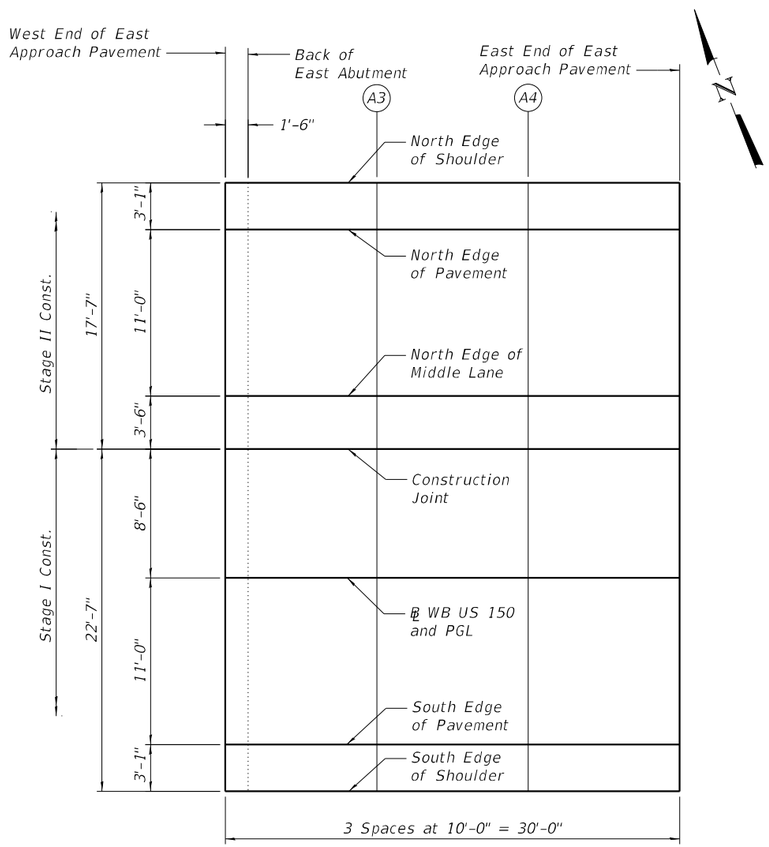

PLAN - EAST APPROACH

SOUTH EDGE OF PAVEMENT

Location	Station	Offset	Theoretical Grade Elevations	Theoretical Grade Elevations Adjusted For Grinding
W. End East Appr. Pav't.	246+44.52	11.00	470.62	470.64
A3	246+54.52	11.00	470.41	470.43
A4	246+64.52	11.00	470.20	470.23
E. End East Appr. Pav't.	246+74.52	11.00	470.00	470.02

SOUTH EDGE OF SHOULDER

Location	Station	Offset	Theoretical Grade Elevations	Theoretical Grade Elevations Adjusted For Grinding
W. End East Appr. Pav't.	246+44.52	14.08	470.55	470.57
A3	246+54.52	14.08	470.35	470.37
A4	246+64.52	14.08	470.14	470.16
E. End East Appr. Pav't.	246+74.52	14.08	469.94	469.96

MODEL: Default
FILE NAME: P:\4312-WBMcCluggageRehab\CADD\Structural_SN 090-0115_WBMainBridge_Final Plans\09001115-68E44-058-TOSE_EAPP1.dgn
3/13/2025 2:54:46 PM

MODJESKI and MASTERS

USER NAME =	DESIGNED - YSS	REVISED -	
	CHECKED - JCH	REVISED -	
PLOT SCALE =	DRAWN - JJE	REVISED -	
PLOT DATE =	CHECKED - YSS	REVISED -	

STATE OF ILLINOIS
DEPARTMENT OF TRANSPORTATION

TOP OF APPROACH SLAB ELEVATIONS - 2
STRUCTURE NO. 090-0115

SHEET S58 OF S214 SHEETS

F.A.P. RTE.	SECTION	COUNTY	TOTAL SHEETS	SHEET NO.
317	(15B-1)BP,BRR	PEO/TAZ	418	228
		CONTRACT NO. 68E44		
		ILLINOIS FED. AID PROJECT		

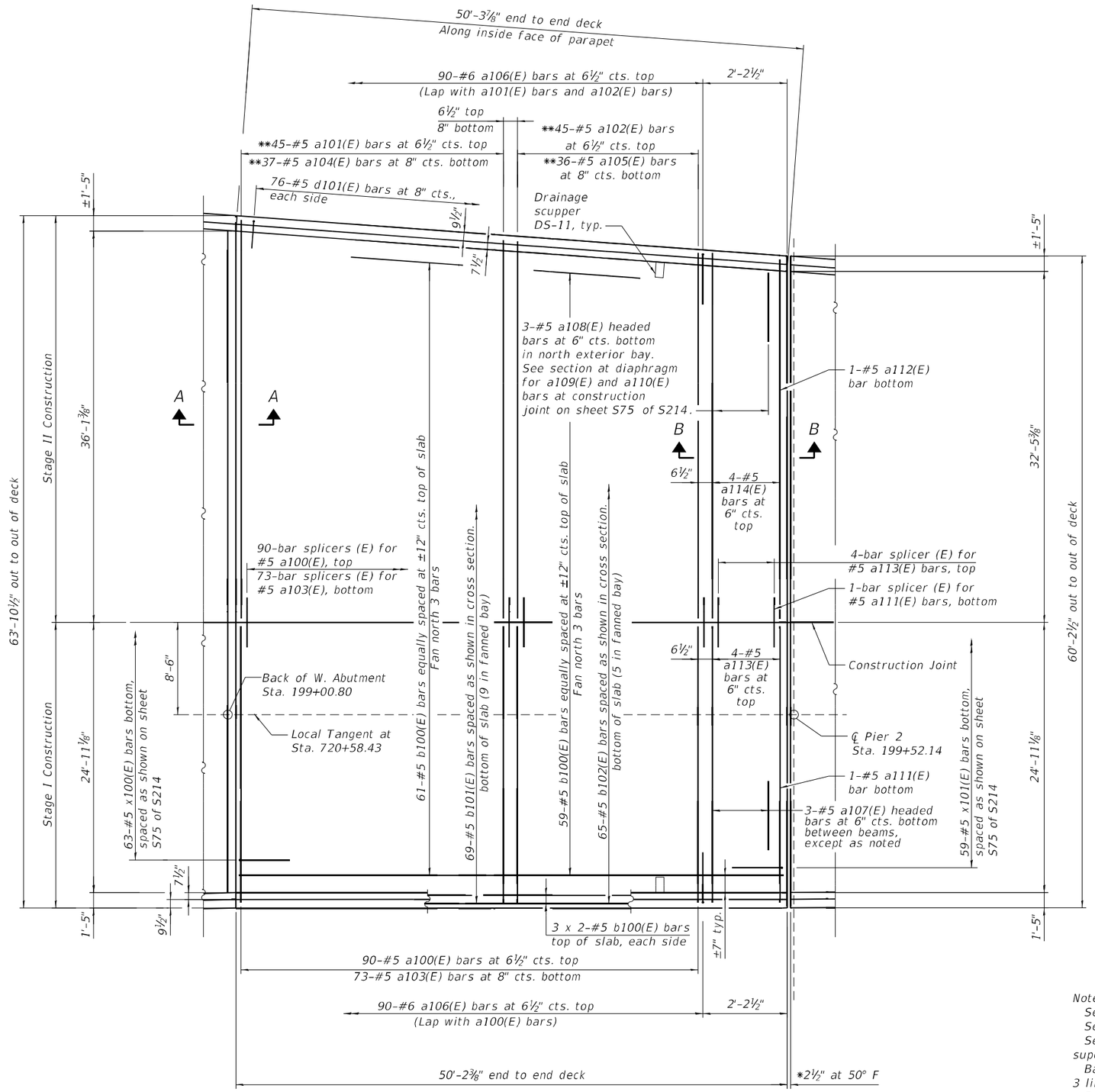

PLAN
Span 3

* Dimension showing deck opening. For strip seal joint opening, see sheet S118 of S214.

** Trim bars in field to fit.

MINIMUM BAR LAP

#5 bar = 3'-6"

Notes:
See sheet S67 of S214 for cross section.
See sheet S114 of S214 drainage scupper stations.
See sheets S75 thru S81 of S214 for superstructure details and Bill of Material.
Bars indicated thus 3 x 2-#5 etc. indicates 3 lines of bars with 2 lengths per line.
For Sections A-A and B-B, see sheet S75 of S214.

MODJESKI and MASTERS

USER NAME =	DESIGNED - UB	REVISED -	
	CHECKED - YSS	REVISED -	
PLOT SCALE =	DRAWN - AEC	REVISED -	
PLOT DATE =	CHECKED - YSS	REVISED -	

STATE OF ILLINOIS
DEPARTMENT OF TRANSPORTATION

SUPERSTRUCTURE - WEST APPROACH - SPAN 3
STRUCTURE NO. 090-0115

SHEET S59 OF S214 SHEETS

F.A.P. RTE.	SECTION	COUNTY	TOTAL SHEETS	SHEET NO.
317	(15B-1)BP,BRR	PEO/TAZ	418	229

CONTRACT NO. 68E44

ILLINOIS | FED. AID PROJECT

MODEL: Default
FILE NAME: P:\4312-VBM\CLugageRehab\CADD\Structural_SN 090-0115_WBMainBridge_Final Plans\0900115-68E44-059-Sup-WestAppr-Span3.dgn

3/13/2025 2:54:50 PM

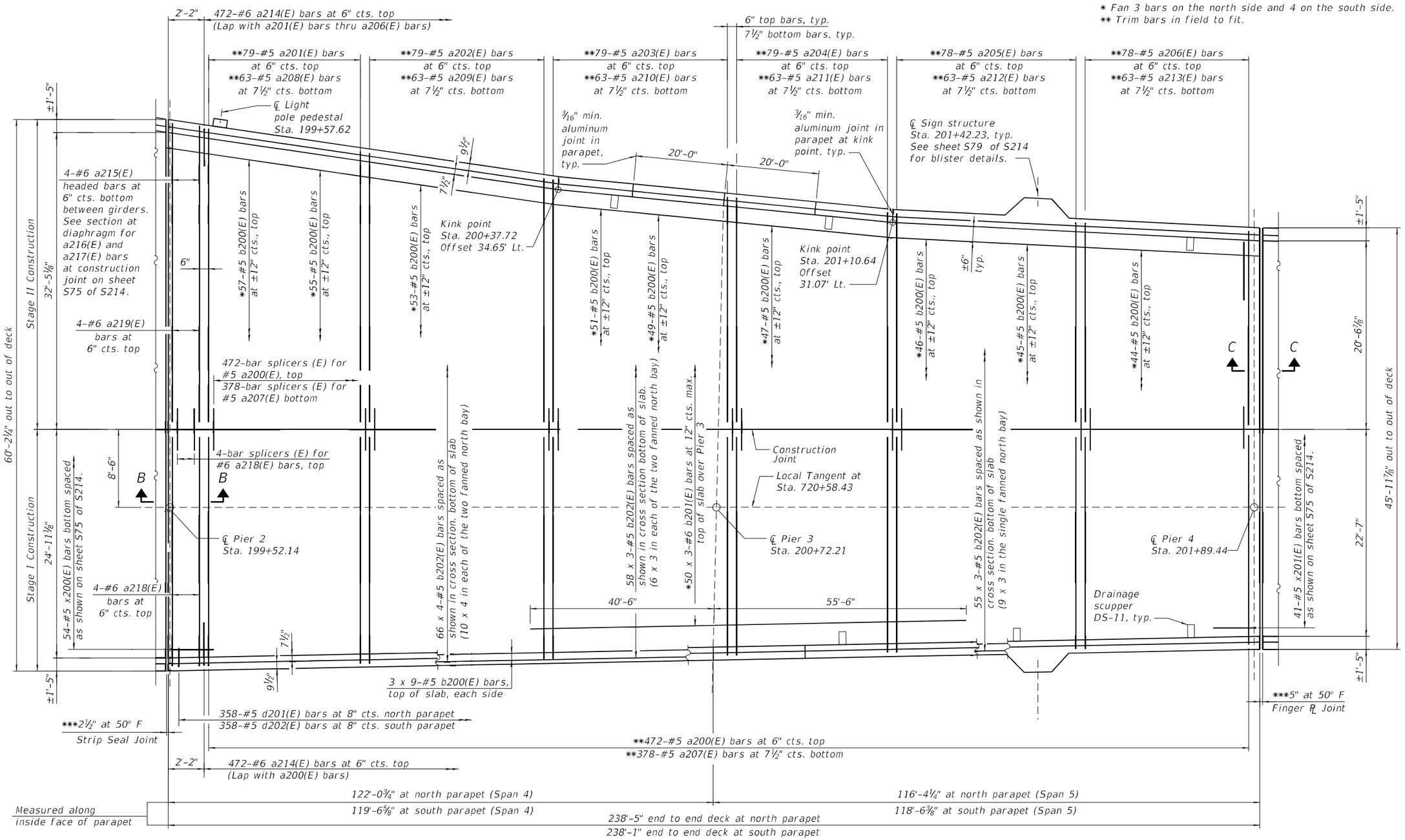

Notes:

Longitudinal bars are placed in continuous lines along the slab. As the slab narrows, bar lines are reduced as shown, with each succeeding bar line spliced to the preceding bars. Continuous bar lines extend the full slab length, while others terminate.

Bend b200(E) and b202(E) bars to fit at kink points.

See sheet S67 of S214 for cross section.

See sheets S75 thru S81 of S214 for superstructure details and Bill of Material.

Bars indicated thus 3 x 9-#5 etc. indicates 3 lines of bars with 9 lengths per line.

See sheet S114 of S214 for drainage scupper stations.

For Sections B-B and C-C, see sheet S75 of S214.

MINIMUM BAR LAP

#5 bar = 3'-6"
#6 bar = 3'-7"

*** Dimensions showing deck openings.
For strip seal joint opening see sheet S118 of S214.
For finger plate joint opening see sheet S120 of S214.

PLAN

Spans 4 and 5

MODJESKI and MASTERS	USER NAME =	DESIGNED - UB	REVISED -	STATE OF ILLINOIS DEPARTMENT OF TRANSPORTATION	SUPERSTRUCTURE - WEST APPROACH - SPANS 4-5 STRUCTURE NO. 090-0115	F.A.P. RTE. 317	SECTION (15B-1)BP,BRR
		CHECKED - YSS	REVISED -			COUNTY PEO/TAZ	TOTAL SHEETS 418
	PLOT SCALE =	DRAWN - AEC	REVISED -			SHEET NO. 230	CONTRACT NO. 68E44
	PLOT DATE =	CHECKED - YSS	REVISED -		SHEET S60 OF S214 SHEETS	ILLINOIS	FED. AID PROJECT

MODEL: Default
FILE NAME: P:\4312-WBM\CUIgageRehab\CADD\Structural_SN 090-0115_WBMainBridge_Final Plans\09001115-68E44-060-Sup-WestAppr-Span4-5.dgn
3/13/2025 2:54:54 PM

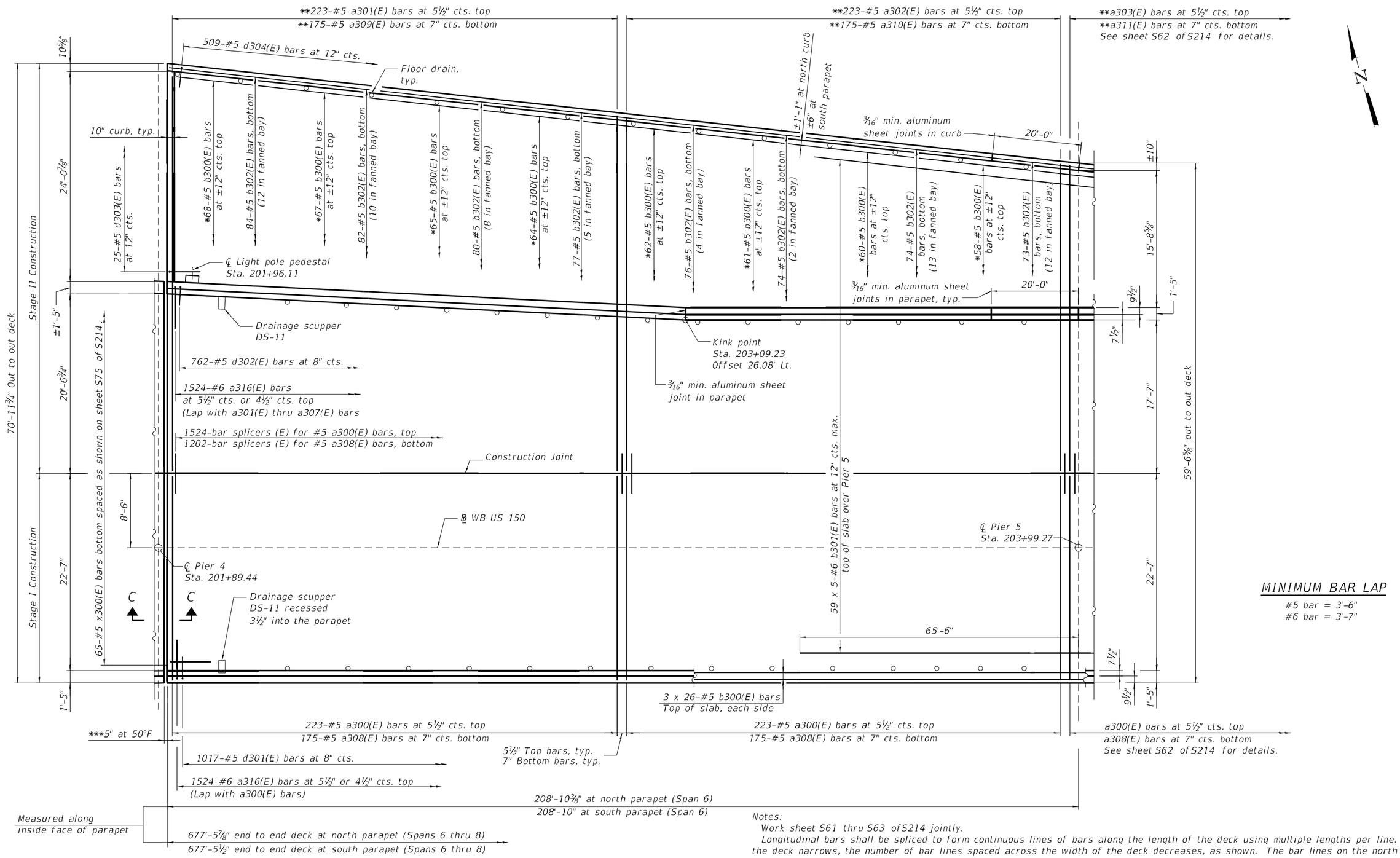

MINIMUM BAR LAP

#5 bar = 3'-6"
#6 bar = 3'-7"

Notes:

Work sheet S61 thru S63 of S214 jointly.

Longitudinal bars shall be spliced to form continuous lines of bars along the length of the deck using multiple lengths per line. As the deck narrows, the number of bar lines spaced across the width of the deck decreases, as shown. The bar lines on the north side of the deck have fewer lengths per line as their bar lines terminate.

Space b302(E) bars as shown in cross section, see sheet S68 of S214 for cross section.

See sheet S114 of S214 for floor drains and drainage scupper stations.

See sheets S75 thru S81 of S214 for superstructure details and Bill of Material.

Bars indicated thus 3 x 26-#5 etc. indicates 3 lines of bars with 26 lengths per line.

For Section C-C, see sheet S75 of S214.

* Fan 3 bars on the north side.
** Trim bars in field to fit.
*** Dimension showing deck opening. For finger plate joint opening, see sheet S120 of S214

PLAN

Span 6

MODEL: Default
FILE NAME: P:\4312-WBKrCLegacyRehab\CADD\Structural_SN 090-0115_WBMainBridge_Final Plans\09001115-68E44-061-Sup-WestAppr-Span6.dgn
3/13/2025 2:54:59 PM

MODJESKI and MASTERS

USER NAME =	DESIGNED - UB	REVISED -	
	CHECKED - YSS	REVISED -	
PLOT SCALE =	DRAWN - AEC	REVISED -	
PLOT DATE =	CHECKED - UB	REVISED -	

STATE OF ILLINOIS
DEPARTMENT OF TRANSPORTATION

SUPERSTRUCTURE - WEST APPROACH - SPAN 6
STRUCTURE NO. 090-0115

SHEET S61 OF S214 SHEETS

F.A.P. RTE.	SECTION	COUNTY	TOTAL SHEETS	SHEET NO.
317	(15B-1)BP,BRR	PEO/TAZ	418	231
		CONTRACT NO. 68E44		
	ILLINOIS	FED. AID PROJECT		

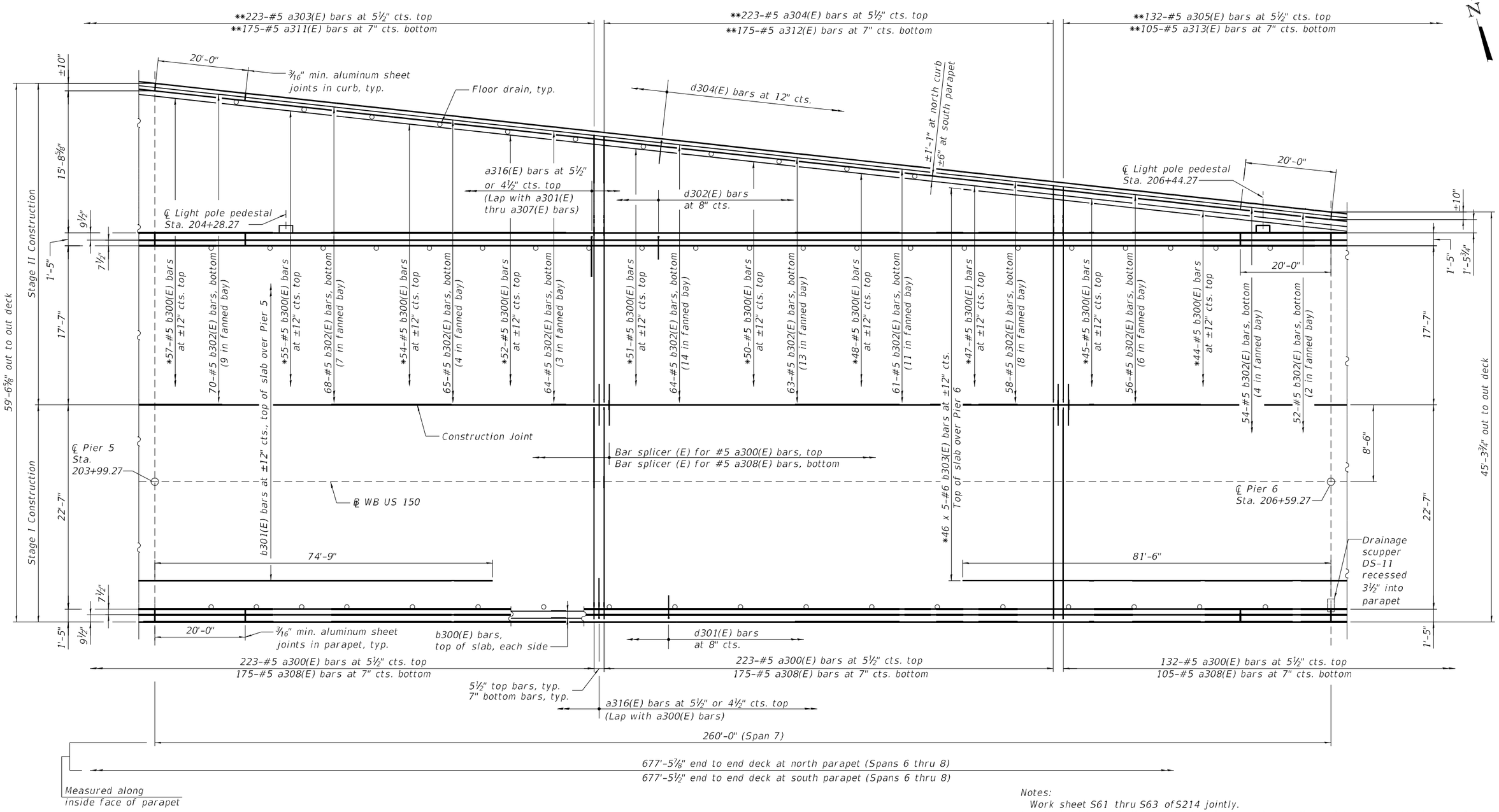

MINIMUM BAR LAP

#5 bar = 3'-6"
#6 bar = 3'-7"

* Fan 3 bars on the north side.
** Trim bars in field to fit.

PLAN

Span 7

Notes:

Work sheet S61 thru S63 of S214 jointly.

Longitudinal bars shall be spliced to form continuous lines of bars along the length of the deck using multiple lengths per line. As the deck narrows, the number of bar lines spaced across the width of the deck decreases, as shown. The bar lines on the north side of the deck have fewer lengths per line as their bar lines terminate.

Space b302(E) bars as shown in cross section, see sheet S68 of S214 for cross section.

See sheet S114 of S214 for floor drains and drainage scupper stations.

See sheets S75 thru S81 of S214 for superstructure details and Bill of Material.

Bars indicated thus 46 x 5-#6 etc. indicates 46 lines of bars with 5 lengths per line.

MODEL: Default
FILE NAME: P:\4312-WBM<CLigageRehab\CADD\Structural_SN 090-0115_WBMainBridge_Final Plans\0900115-68E44-062-Sup-WestAppr-Span7.dgn

MODJESKI and MASTERS

USER NAME =	DESIGNED - UB	REVISED -	
	CHECKED - YSS	REVISED -	
PLOT SCALE =	DRAWN - AEC	REVISED -	
PLOT DATE =	CHECKED - UB	REVISED -	

STATE OF ILLINOIS
DEPARTMENT OF TRANSPORTATION

SUPERSTRUCTURE - WEST APPROACH - SPAN 7
STRUCTURE NO. 090-0115

SHEET S62 OF S214 SHEETS

F.A.P. RTE.	SECTION	COUNTY	TOTAL SHEETS	SHEET NO.
317	(15B-1)BP,BRR	PEO/TAZ	418	232

CONTRACT NO. 68E44

ILLINOIS | FED. AID PROJECT

3/13/2025 2:55:03 PM

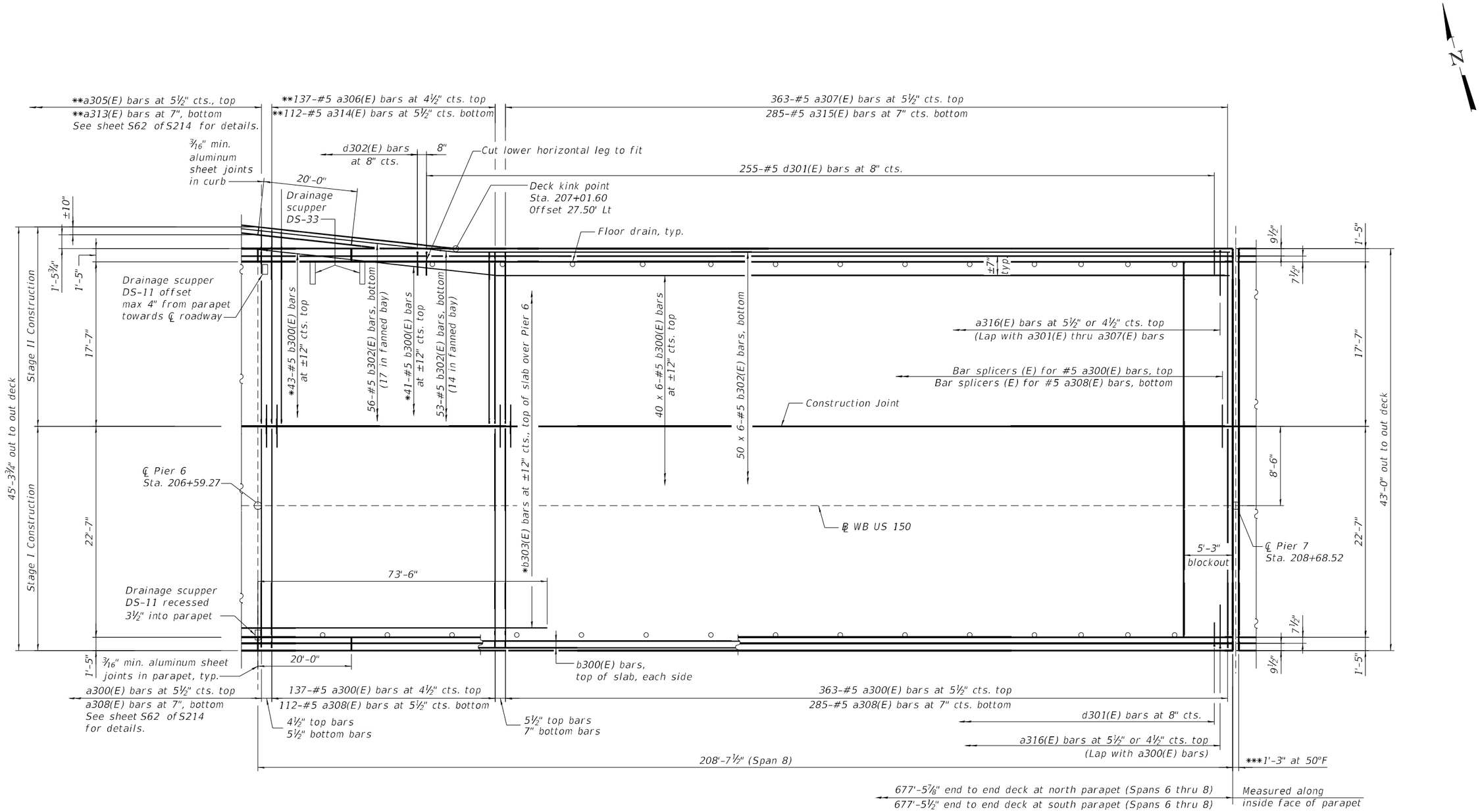

PLAN

Span 8

d304(E) bars at end of north curb not shown for clarity. See Detail B on sheet S73 of S214

* Fan 3 bars on the north side.
** Trim bars in field to fit.
*** Dimension showing deck opening. Modular joint opening per manufacturer, see sheet S122 of S214 for details. For superstructure details at modular joint, see sheet S76 of S214.

MINIMUM BAR LAP

#5 bar = 3'-6"
#6 bar = 3'-7"

Notes:
Work sheet S61 thru S63 of S214 jointly.
Longitudinal bars shall be spliced to form continuous lines of bars along the length of the deck using multiple lengths per line. As the deck narrows, the number of bar lines spaced across the width of the deck decreases, as shown. The bar lines on the north side of the deck have fewer lengths per line as their bar lines terminate.
Bend b300(E) and b302(E) bars to fit at kink points.
Space b302(E) bars as shown in cross section, see sheet S68 of S214 for cross section.
See sheet S114 of S214 for floor drains and drainage scupper stations.
See sheets S75 thru S81 of S214 for superstructure details and Bill of Material.
Bars indicated thus 40 x 6-#5 etc. indicates 40 lines of bars with 6 lengths per line.

MODJESKI and MASTERS

USER NAME =	DESIGNED - UB	REVISED -	
	CHECKED - YSS	REVISED -	
PLOT SCALE =	DRAWN - AEC	REVISED -	
PLOT DATE =	CHECKED - UB	REVISED -	

STATE OF ILLINOIS
DEPARTMENT OF TRANSPORTATION

SUPERSTRUCTURE - WEST APPROACH - SPAN 8
STRUCTURE NO. 090-0115

SHEET S63 OF S214 SHEETS

F.A.P. RTE.	SECTION	COUNTY	TOTAL SHEETS	SHEET NO.
317	(15B-1)BP,BRR	PEO/TAZ	418	233

CONTRACT NO. 68E44
ILLINOIS FED. AID PROJECT

MODEL: Default
FILE NAME: P:\4312-WBMcClugageRehab\CADD\Structural_SN 090-0115_WBMainBridge_Final Plans\0900115-68E44-063-Sup-WestApp-Span8.dgn
3/13/2025 2:55:07 PM

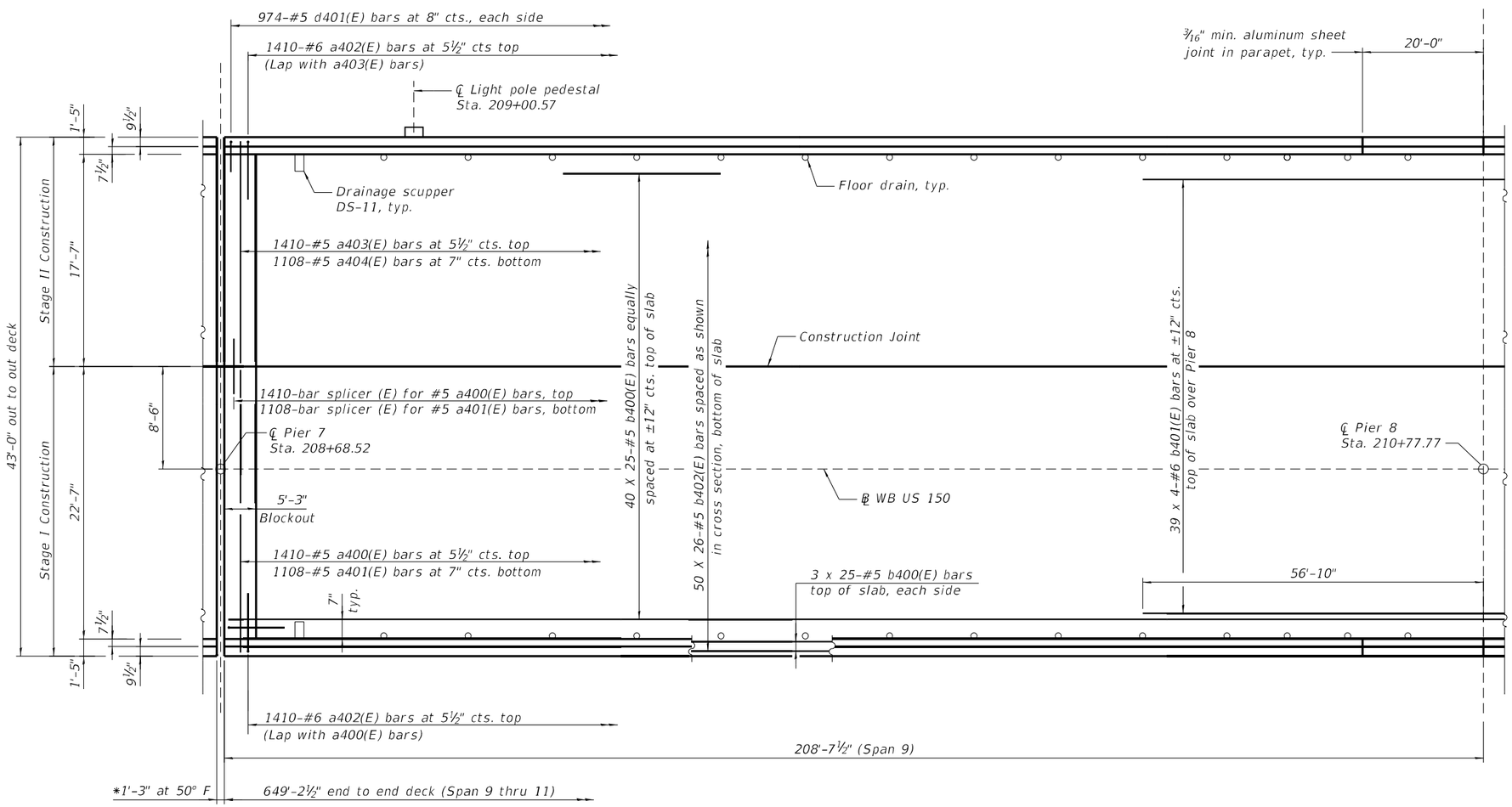

PLAN
Span 9

* Dimension showing deck opening. Modular joint opening per manufacturer, see sheet S122 of S214 for details. For superstructure details at modular joint, see sheet S76 of S214.

MINIMUM BAR LAP

#5 bar = 3'-6"
#6 bar = 3'-7"

Notes:
See sheet S69 of S214 for cross section.
See sheet S114 of S214 for floor drains and drainage scupper stations.
See sheets S75 thru S81 of S214 for superstructure details and Bill of Material.
Bars indicated thus 40 x 25-#5 etc. indicates 40 lines of bars with 25 lengths per line.

MODEL: Default
FILE NAME: P:\4312-WBMcCLugageRehab\CADD\Structural_SN 090-0115_WBMainBridge_Final Plans\0900115-68E44-064-Sup-WestApp-Span9.dgn
3/13/2025 2:55:11 PM

MODJESKI and MASTERS

USER NAME =	DESIGNED - UB	REVISED -	
	CHECKED - YSS	REVISED -	
PLOT SCALE =	DRAWN - AEC	REVISED -	
PLOT DATE =	CHECKED - UB	REVISED -	

STATE OF ILLINOIS
DEPARTMENT OF TRANSPORTATION

SUPERSTRUCTURE - WEST APPROACH - SPAN 9
STRUCTURE NO. 090-0115

SHEET S64 OF S214 SHEETS

F.A.P. RTE.	SECTION	COUNTY	TOTAL SHEETS	SHEET NO.
317	(15B-1)BP,BRR	PEO/TAZ	418	234
		CONTRACT NO. 68E44		
	ILLINOIS	FED. AID PROJECT		

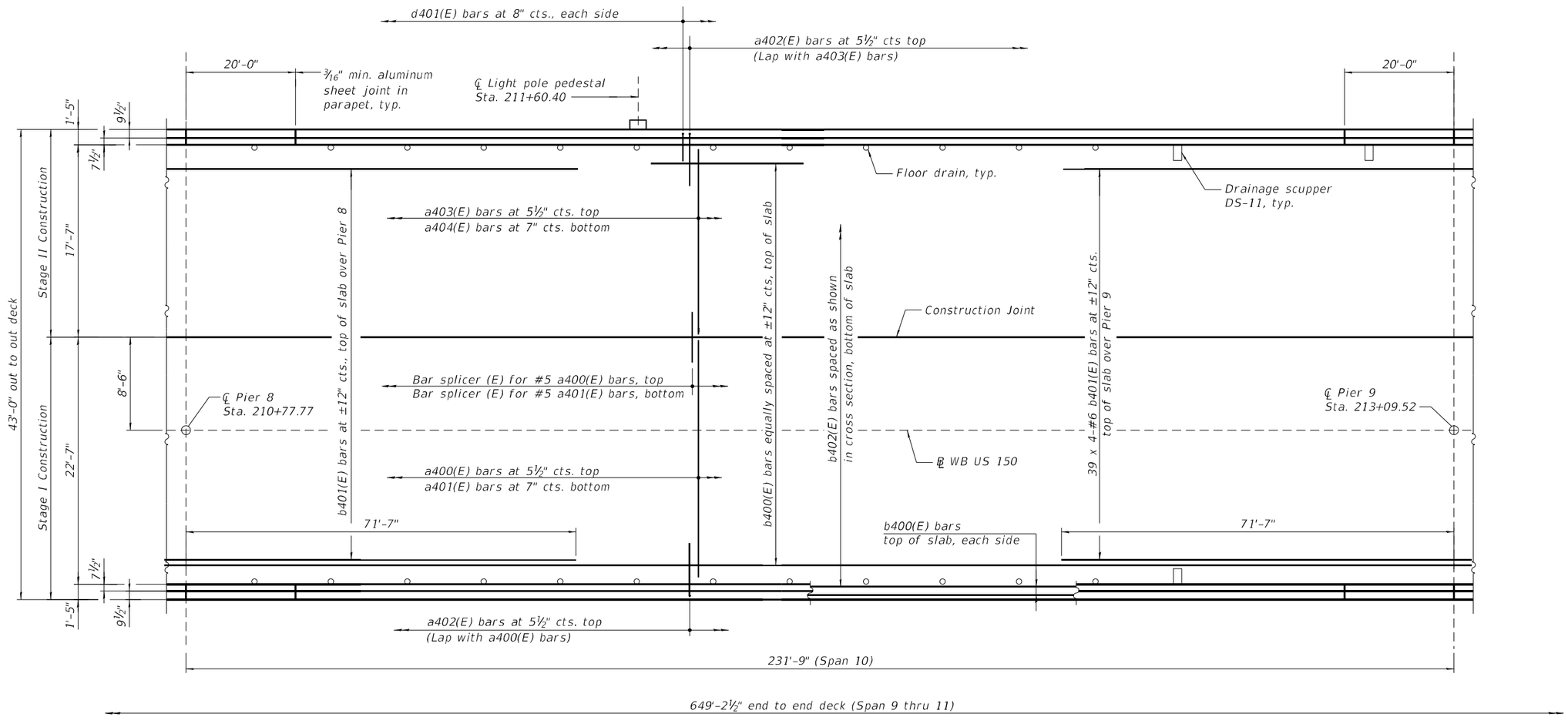

PLAN

Span 10

MINIMUM BAR LAP

#5 bar = 3'-6"
#6 bar = 3'-7"

Notes:

See sheet S69 of S214 for cross section.

See sheet S114 of S214 for floor drains and drainage scupper stations.

See sheets S75 thru S81 of S214 for superstructure details and Bill of Material.

Bars indicated thus 39 x 4-#6 etc. indicates 39 lines of bars with 4 lengths per line.

MODJESKI and MASTERS

USER NAME =	DESIGNED - UB	REVISED -
	CHECKED - YSS	REVISED -
PLOT SCALE =	DRAWN - AEC	REVISED -
PLOT DATE =	CHECKED - UB	REVISED -

STATE OF ILLINOIS
DEPARTMENT OF TRANSPORTATION

SUPERSTRUCTURE - WEST APPROACH - SPAN 10
STRUCTURE NO. 090-0115

SHEET S65 OF S214 SHEETS

F.A.P. RTE.	SECTION	COUNTY	TOTAL SHEETS	SHEET NO.
317	(15B-1)BP,BRR	PEO/TAZ	418	235

CONTRACT NO. 68E44

ILLINOIS | FED. AID PROJECT

MODEL: Default
FILE NAME: P:\4312-VBMcCLugageRehab\CADD\Structural_SN 090-0115_WBMainBridge_Final Plans\0900115-68E44-065-Sup-WestApp-Span10.dgn

3/13/2025 2:55:17 PM

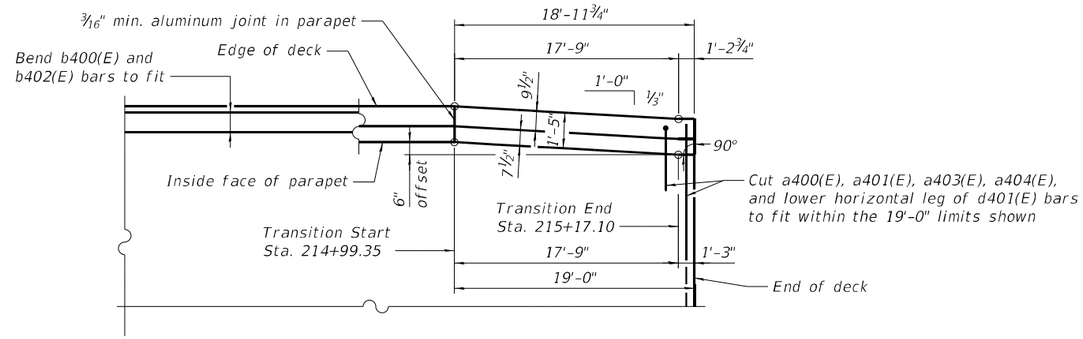

SHOULDER WIDTH TRANSITION DETAIL

North parapet details shown, south parapet similar

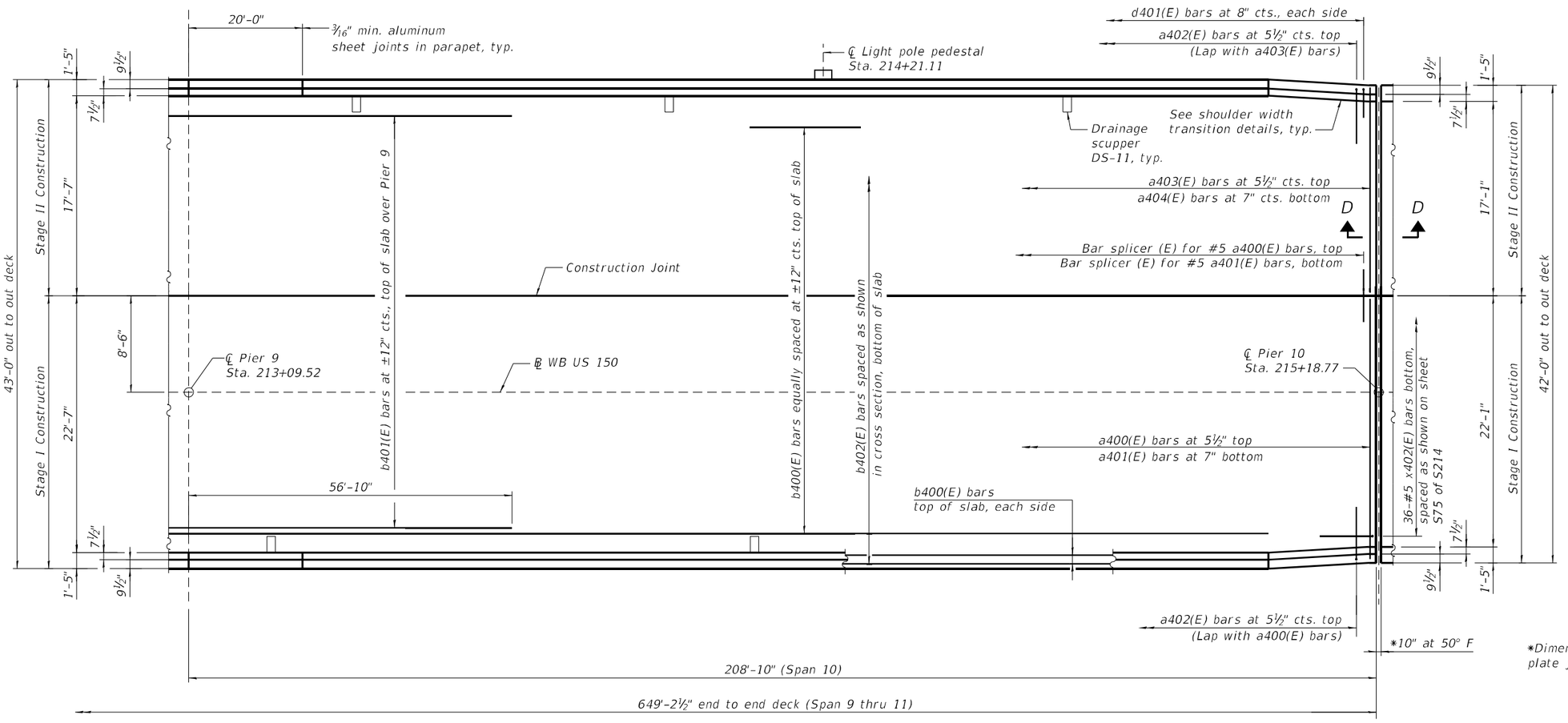

*Dimension showing deck opening. For finger plate joint opening, see sheet S125 of S214.

PLAN

Span 11

MINIMUM BAR LAP

#5 bar = 3'-6"
#6 bar = 3'-7"

Notes:
See sheet S69 of S214 for cross section.
See sheet S114 of S214 for drainage scupper stations.
See sheets S75 thru S81 of S214 for superstructure details and Bill of Material.
For Section D-D, see sheet S75 of S214.

MODEL: Default
FILE NAME: P:\4312-WBKcCligageRehab\CADD\Structural_SN 090-0115_WBMainBridge_Final Plans\0900115-68E44-066-Sup-WestAppr-Span11.dgn
3/13/2025 2:55:20 PM

MODJESKI and MASTERS

USER NAME =	DESIGNED - UB	REVISED -	
	CHECKED - YSS	REVISED -	
PLOT SCALE =	DRAWN - AEC	REVISED -	
PLOT DATE =	CHECKED - UB	REVISED -	

STATE OF ILLINOIS
DEPARTMENT OF TRANSPORTATION

SUPERSTRUCTURE - WEST APPROACH - SPAN 11
STRUCTURE NO. 090-0115

SHEET S66 OF S214 SHEETS

F.A.P. RTE.	SECTION	COUNTY	TOTAL SHEETS	SHEET NO.
317	(15B-1)BP,BRR	PEO/TAZ	418	236

CONTRACT NO. 68E44

ILLINOIS | FED. AID PROJECT

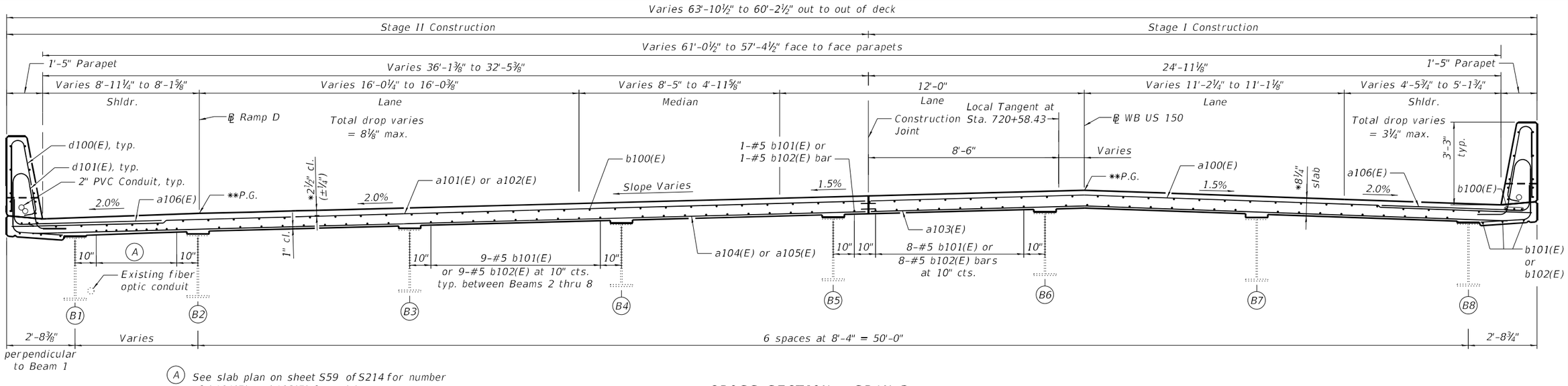

(A) See slab plan on sheet S59 of S214 for number of b101(E) or b102(E) fanned bars.

(B) See slab plan on sheet S60 of S214 for number of b202(E) fanned bars between Girders 1 thru 3.

CROSS SECTION - SPAN 3

Looking East

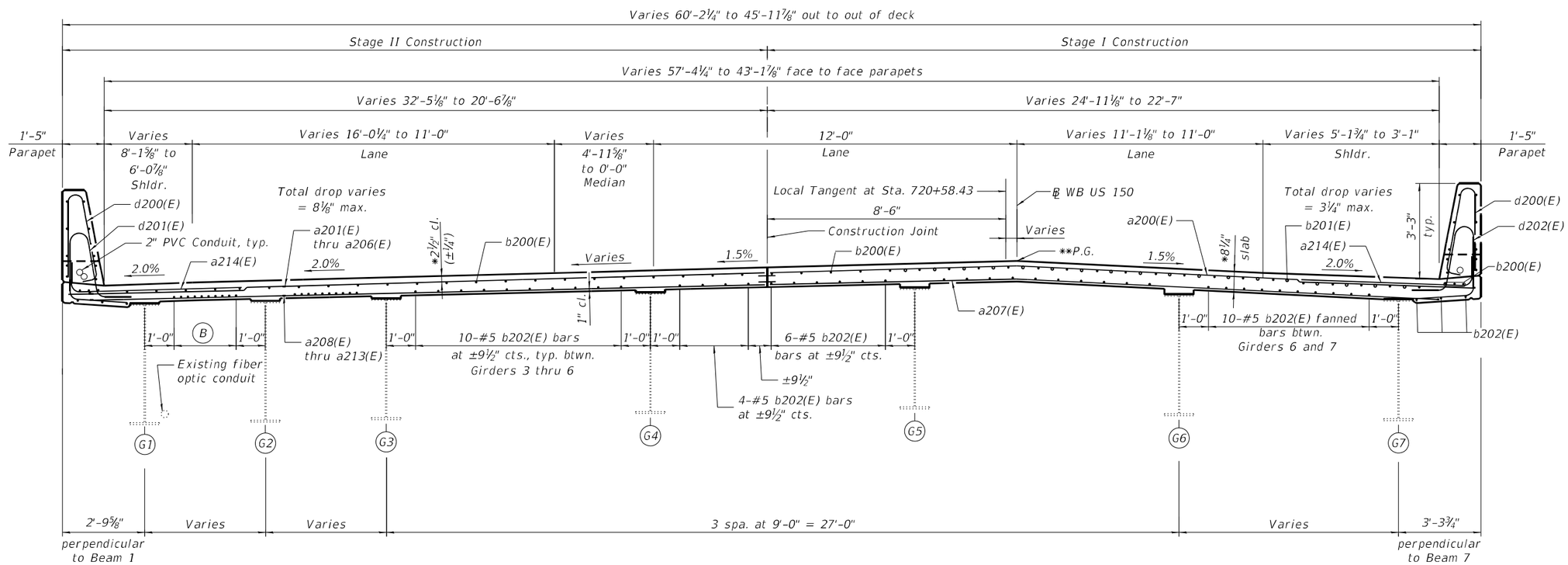

*Prior to grinding

**After grinding

NEAR MIDSPAN

CROSS SECTION - SPANS 4 AND 5

Looking East

Girder 2 is only located along a portion of the flared cross section

See framing plan on sheet S137 of S214 for details.

NEAR PIER

Note:
See sheets S75 thru S81 of S214 for superstructure details and Bill of Material.

MODEL: Default
FILE NAME: P:\4312-WBMcCLugageRehab\CADD\Structural_SN 090-0115_WBMainBridge_Final Plans\0900115-68E44-067-Sup-WestAppr-CrossSection1.dgn

3/13/2025 2:55:25 PM

MODJESKI and MASTERS

USER NAME =	DESIGNED - YJ	REVISED -	
	CHECKED - UB	REVISED -	
PLOT SCALE =	DRAWN - AEC	REVISED -	
PLOT DATE =	CHECKED - UB	REVISED -	

STATE OF ILLINOIS
DEPARTMENT OF TRANSPORTATION

SUPERSTRUCTURE - WEST APPROACH - CROSS SECTION - 1
STRUCTURE NO. 090-0115

SHEET S67 OF S214 SHEETS

F.A.P. RTE.	SECTION	COUNTY	TOTAL SHEETS	SHEET NO.
317	(15B-1)BP,BRR	PEO/TAZ	418	237
		CONTRACT NO. 68E44		
	ILLINOIS	FED. AID PROJECT		

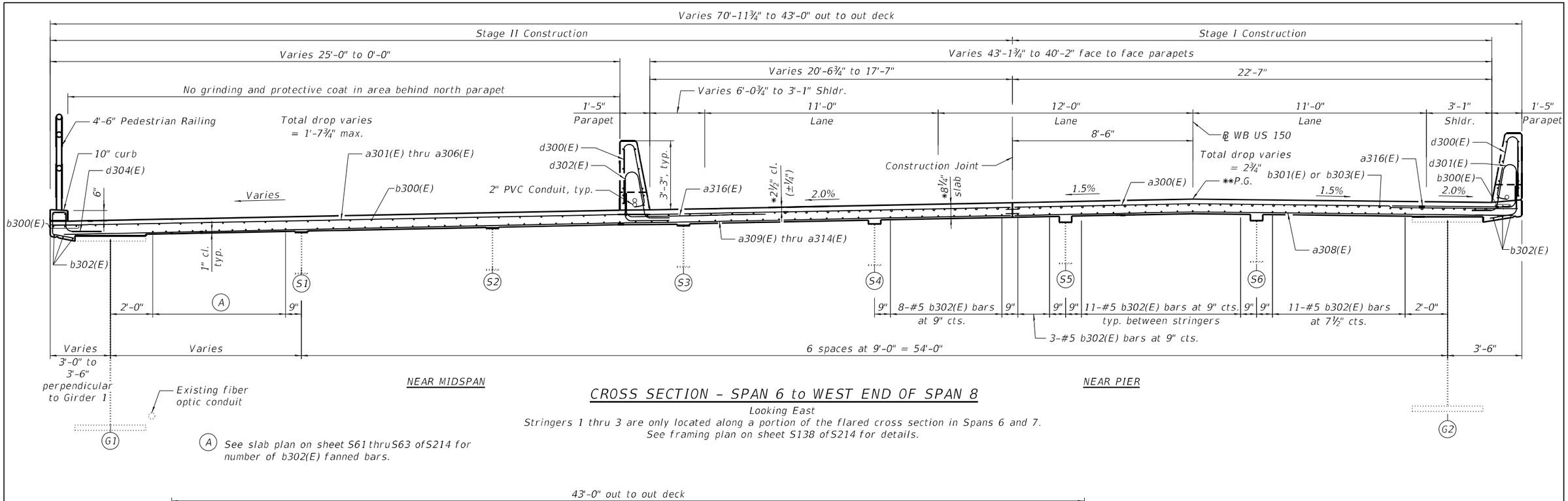

CROSS SECTION - SPAN 6 to WEST END OF SPAN 8

Looking East

Stringers 1 thru 3 are only located along a portion of the flared cross section in Spans 6 and 7.
See framing plan on sheet S138 of S214 for details.

(A) See slab plan on sheet S61 thru S63 of S214 for number of b302(E) fanned bars.

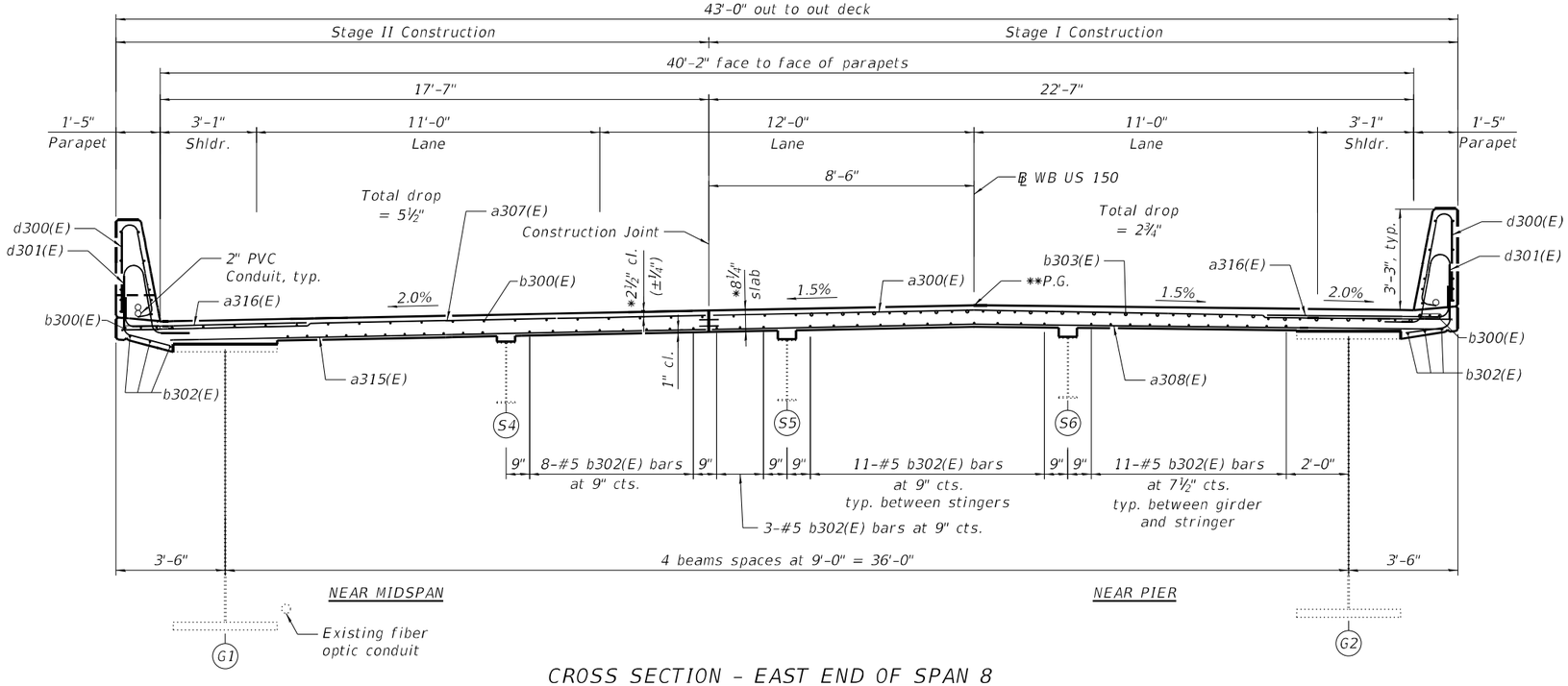

CROSS SECTION - EAST END OF SPAN 8

Looking East

*Prior to grinding

**After grinding

Notes:
See sheets S75 thru S81 of S214 for superstructure details and Bill of Material.
See sheets S108 and S109 of S214 for pedestrian railing details.

MODEL: Default
FILE NAME: P:\4312-WBMcCLugageRehab\CADD\Structural_SN 090-0115_WBMainBridge_Final Plans\0900115-68E44-068-Sup-WestApp-CrossSection2.dgn

MODJESKI and MASTERS

USER NAME =	DESIGNED - UB	REVISED -	
	CHECKED - YSS	REVISED -	
PLOT SCALE =	DRAWN - AEC	REVISED -	
PLOT DATE =	CHECKED - UB	REVISED -	

STATE OF ILLINOIS
DEPARTMENT OF TRANSPORTATION

SUPERSTRUCTURE - WEST APPROACH - CROSS SECTION - 2
STRUCTURE NO. 090-0115

SHEET S68 OF S214 SHEETS

F.A.P. RTE.	SECTION	COUNTY	TOTAL SHEETS	SHEET NO.
317	(15B-1)BP,BRR	PEO/TAZ	418	238
		CONTRACT NO. 68E44		
		ILLINOIS	FED. AID PROJECT	

3/13/2025 2:55:30 PM

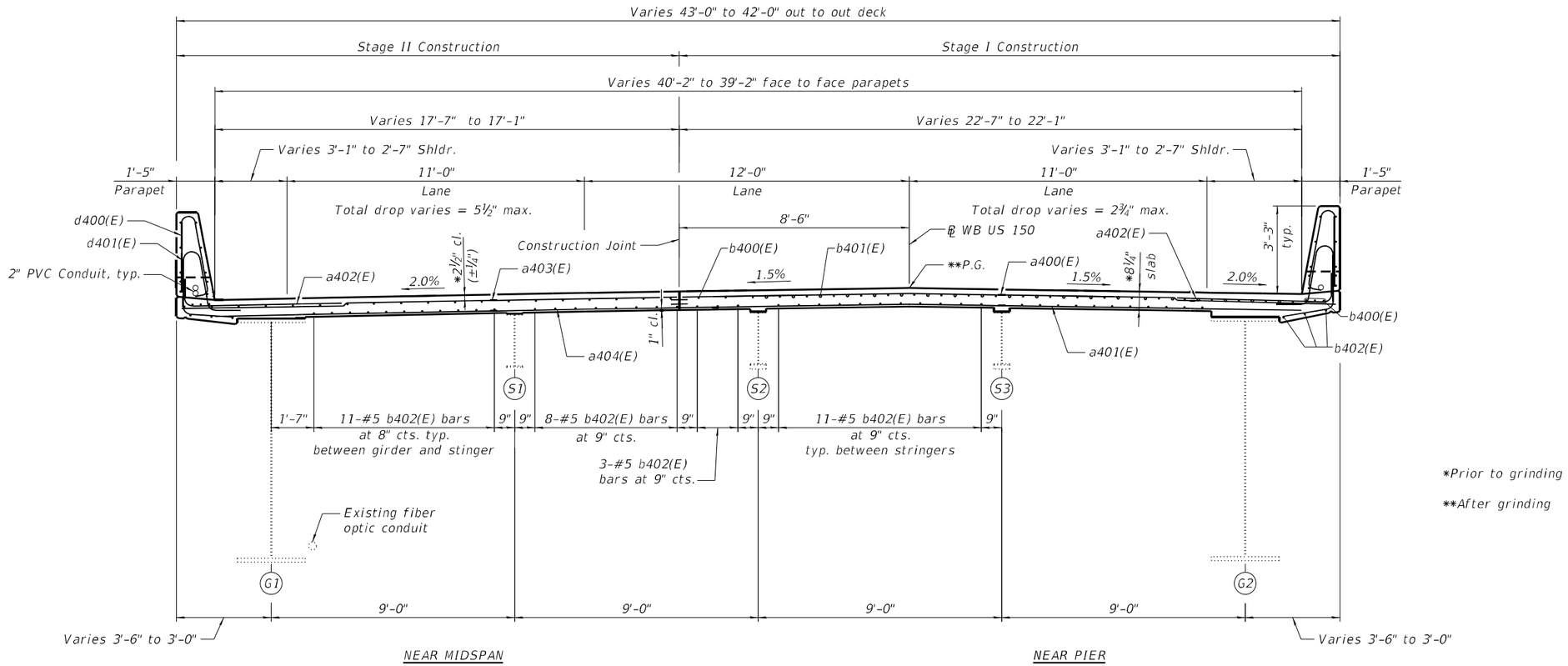

*Prior to grinding

**After grinding

CROSS SECTION - SPANS 9 THRU 11

Looking East

Shoulder width transition from Sta. 214+99.35 to Sta. 215+17.10

Note:
See sheets S75 thru S81 of S214 for superstructure details and Bill of Material.

USER NAME =	DESIGNED - UB	REVISED -	STATE OF ILLINOIS DEPARTMENT OF TRANSPORTATION
	CHECKED - YSS	REVISED -	
PLOT SCALE =	DRAWN - AEC	REVISED -	
PLOT DATE =	CHECKED - UB	REVISED -	

MODJESKI and MASTERS

SUPERSTRUCTURE - WEST APPROACH - CROSS SECTION - 3
STRUCTURE NO. 090-0115

SHEET S69 OF S214 SHEETS

F.A.P. RTE.	SECTION	COUNTY	TOTAL SHEETS	SHEET NO.
317	(15B-1)BP,BRR	PEO/TAZ	418	239
		CONTRACT NO. 68E44		
		ILLINOIS FED. AID PROJECT		

MODEL: Default
FILE NAME: P:\4312-VBM-CLugageRehab\CADD\Structural_SN 090-0115_WBMainBridge_Final Plans\0900115-68E44-069-Sup-WestApp-CrossSection3.dgn
3/13/2025 2:55:34 PM

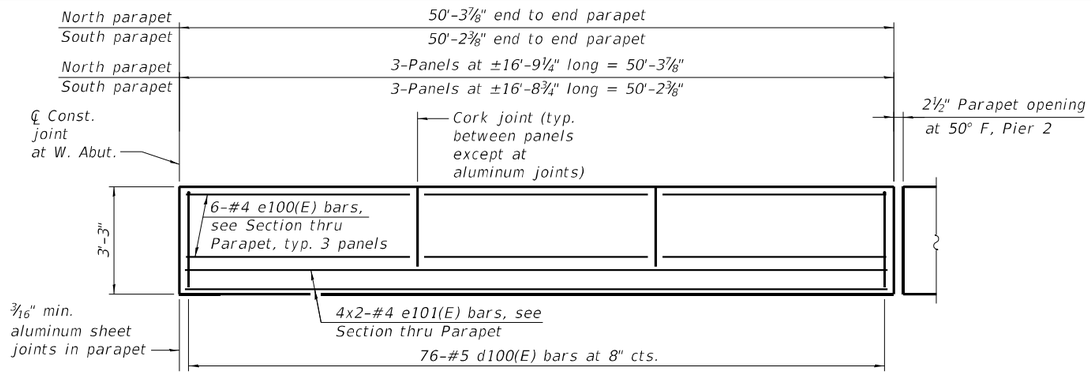

INSIDE ELEVATION OF PARAPET - SPAN 3

North parapet shown, South parapet opposite hand

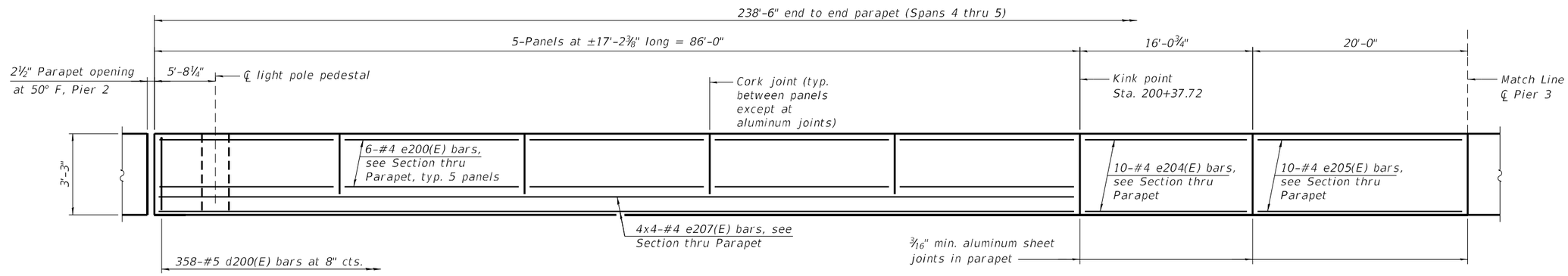

INSIDE ELEVATION OF NORTH PARAPET - SPAN 4

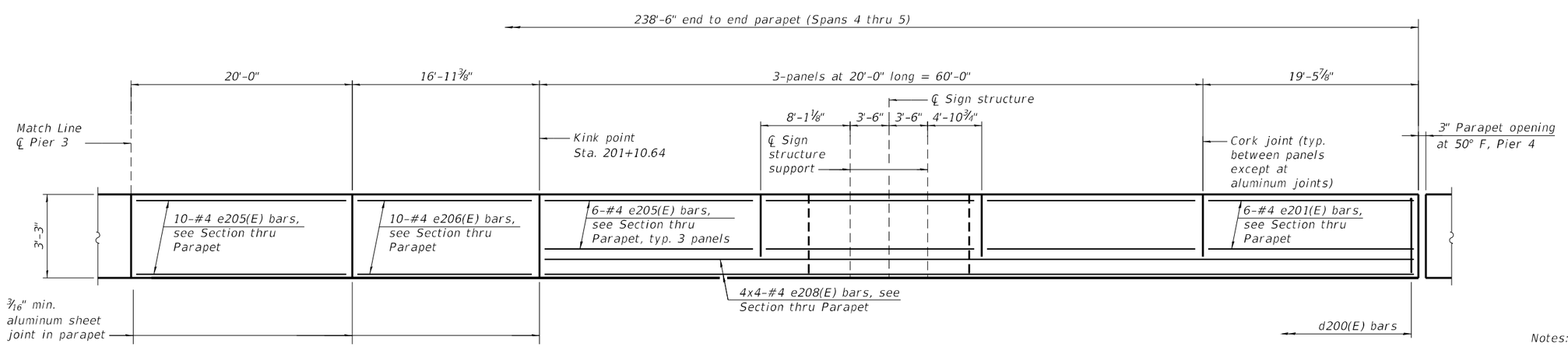

INSIDE ELEVATION OF NORTH PARAPET - SPAN 5

MINIMUM BAR LAP

#4 bar = 2'-5"

Notes:

See sheet S77 of S214 for section thru parapet.

Work sheets S70 and S71 of S214 jointly.

Bars indicated thus 4 x 4-#4 etc. indicates 4 lines of bars with 4 lengths per line.

MODEL: Default
FILE NAME: P:\4312-WBMcCLugageRehab\CADD\Structural_SN 090-0115_WBMainBridge_Final Plans\0900115-68E44-070-Sup-WestApp-ParapetI.dgn
3/13/2025 2:55:37 PM

MODJESKI and MASTERS

USER NAME =	DESIGNED - UB	REVISED -	
	CHECKED - YSS	REVISED -	
PLOT SCALE =	DRAWN - AEC	REVISED -	
PLOT DATE =	CHECKED - UB	REVISED -	

STATE OF ILLINOIS
DEPARTMENT OF TRANSPORTATION

SUPERSTRUCTURE - WEST APPROACH - PARAPET - 1
STRUCTURE NO. 090-0115

SHEET S70 OF S214 SHEETS

F.A.P. RTE.	SECTION	COUNTY	TOTAL SHEETS	SHEET NO.
317	(15B-1)BP,BRR	PEO/TAZ	418	240

CONTRACT NO. 68E44

ILLINOIS | FED. AID PROJECT

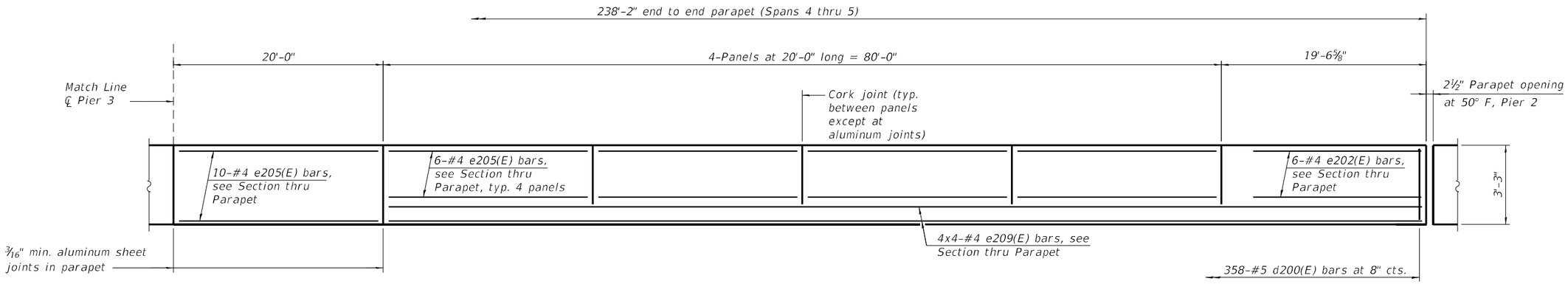

INSIDE ELEVATION OF SOUTH PARAPET - SPAN 4

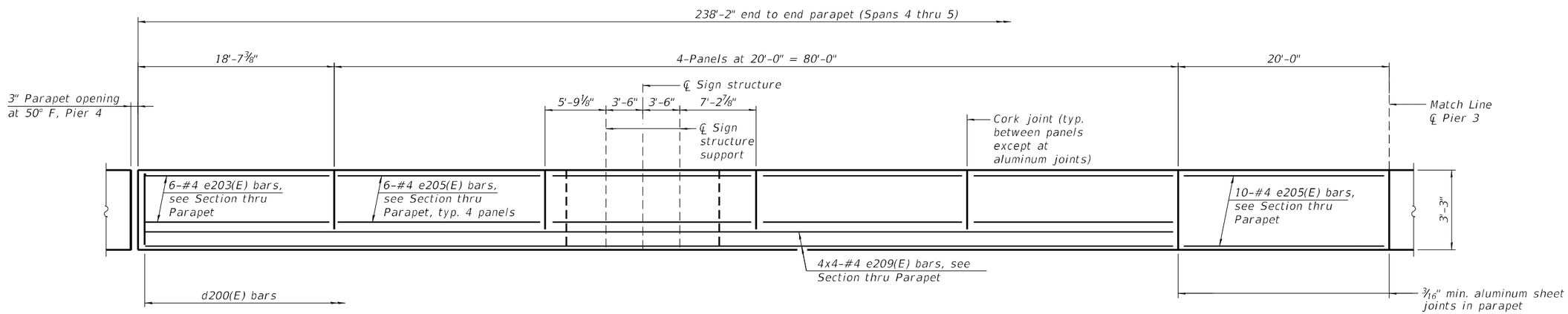

INSIDE ELEVATION OF SOUTH PARAPET - SPAN 5

MINIMUM BAR LAP

#4 bar = 2'-5"

Notes:

See sheet S77 of S214 for section thru parapet.

Work sheets S70 and S71 of S214 jointly.

Bars indicated thus 4 x 4-#4 etc. indicates 4 lines of bars with 4 lengths per line.

MODEL: Default
FILE NAME: P:\4312-WBMcCLugageRehab\CADD\Structural_SN 090-0115_WBMainBridge_Final Plans\0900115-68E44-071-Sup-WestApp-Parapet2.dgn

MODJESKI and MASTERS	USER NAME =	DESIGNED - UB	REVISED -	STATE OF ILLINOIS DEPARTMENT OF TRANSPORTATION	SUPERSTRUCTURE - WEST APPROACH - PARAPET - 2 STRUCTURE NO. 090-0115	F.A.P. RTE.	SECTION	COUNTY	TOTAL SHEETS	SHEET NO.
		CHECKED - YSS	REVISED -			317	(15B-1)BP,BRR	PEO/TAZ	418	241
	PLOT SCALE =	DRAWN - AEC	REVISED -					CONTRACT NO. 68E44		
	PLOT DATE =	CHECKED - YSS	REVISED -		SHEET S71 OF S214 SHEETS		ILLINOIS	FED. AID PROJECT		

3/13/2025 2:55:40 PM

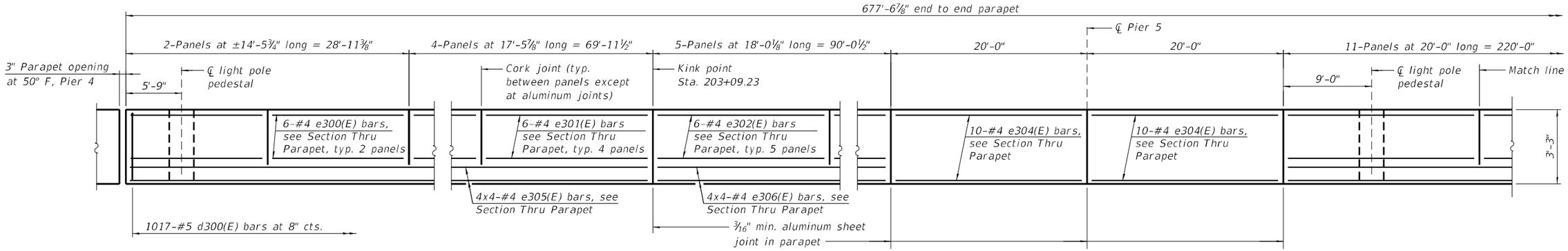

PART INSIDE ELEVATION OF NORTH PARAPET - SPAN 6 AND PARTIAL SPAN 7

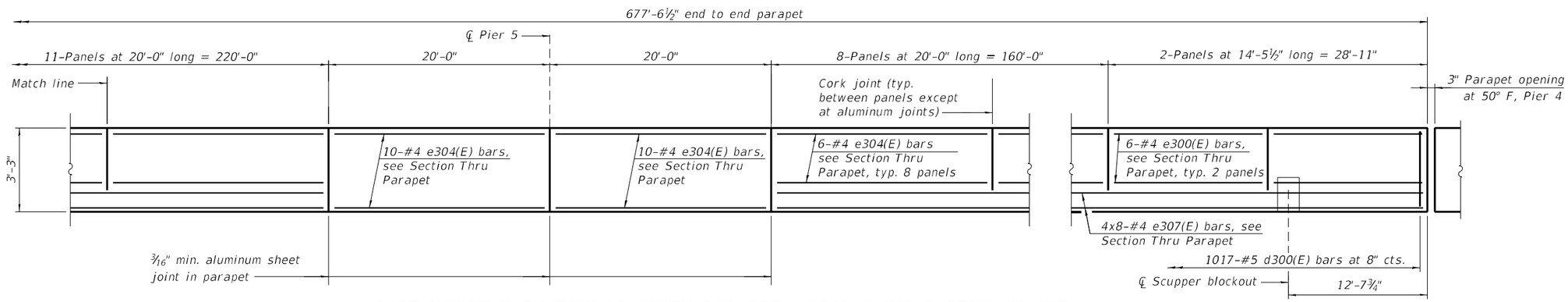

PART INSIDE ELEVATION OF SOUTH PARAPET - SPAN 6 AND PARTIAL SPAN 7

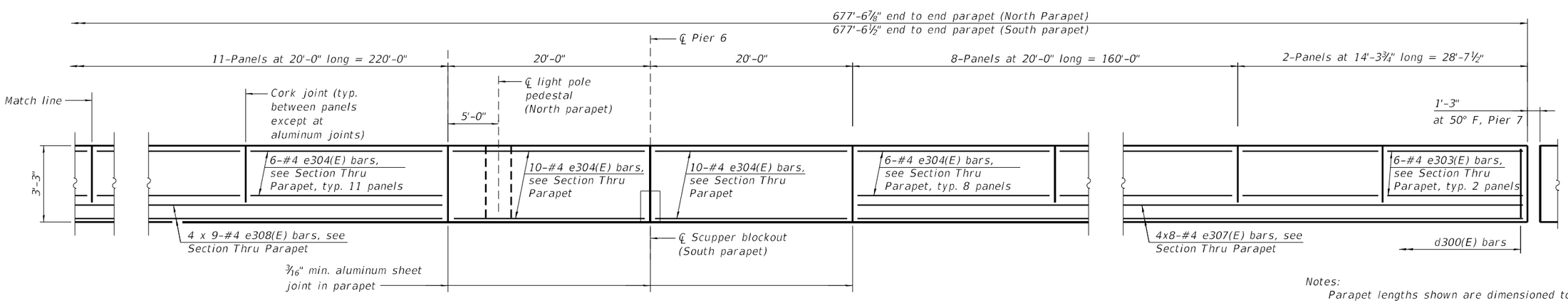

PART INSIDE ELEVATION OF PARAPET - PARTIAL SPAN 7 AND 8

North parapet shown, south parapet opposite hand

Notes:

Parapet lengths shown are dimensioned to the deck opening at Pier 7, not the modular joint opening. Joint/parapet opening per manufacturer, see sheet S122 and S123 of S214 for details.

See sheet S73 of S214 for scupper blockout details.

See sheet S77 of S214 for Section Thru Parapet.

Bars indicated thus 4 x 8-#4 etc. indicates 4 lines of bars with 8 lengths per line.

MINIMUM BAR LAP

#4 bar = 2'-5"

MODEL: Default
FILE NAME: P:\4312-WBMcCLugageRehab\CADD\Structural_SN 090-0115_WBMainBridge_Final Plans\0900115-68E44-072-Sup-WestApp-Parapet3.dgn

MODJESKI and MASTERS

USER NAME =	DESIGNED - YJ	REVISED -	
	CHECKED - UB	REVISED -	
PLOT SCALE =	DRAWN - AEC	REVISED -	
PLOT DATE =	CHECKED - UB	REVISED -	

STATE OF ILLINOIS
DEPARTMENT OF TRANSPORTATION

SUPERSTRUCTURE - WEST APPROACH - PARAPET - 3
STRUCTURE NO. 090-0115

SHEET S72 OF S214 SHEETS

F.A.P. RTE.	SECTION	COUNTY	TOTAL SHEETS	SHEET NO.
317	(15B-1)BP,BRR	PEO/TAZ	418	242
		CONTRACT NO. 68E44		
	ILLINOIS	FED. AID PROJECT		

3/13/2025 2:55:43 PM

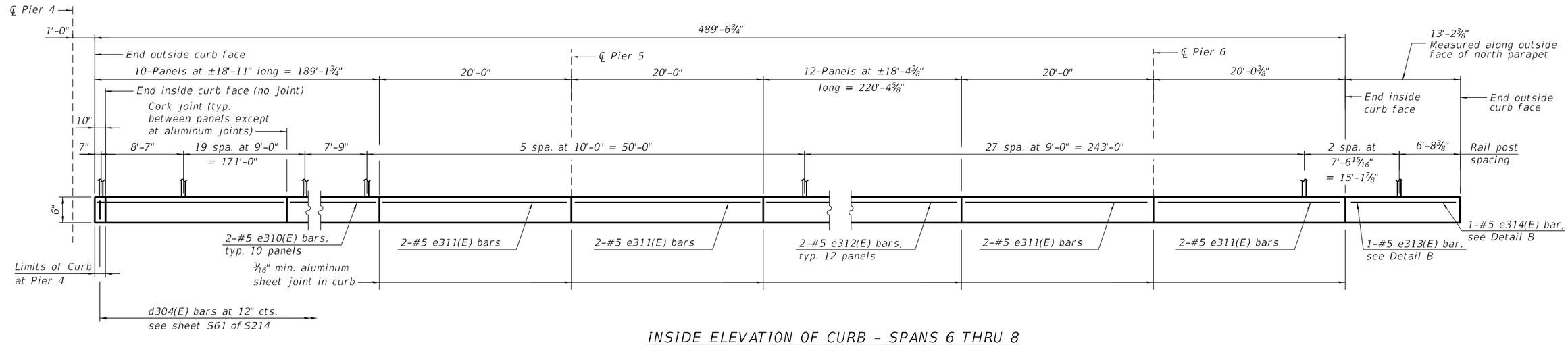

INSIDE ELEVATION OF CURB - SPANS 6 THRU 8

Looking north

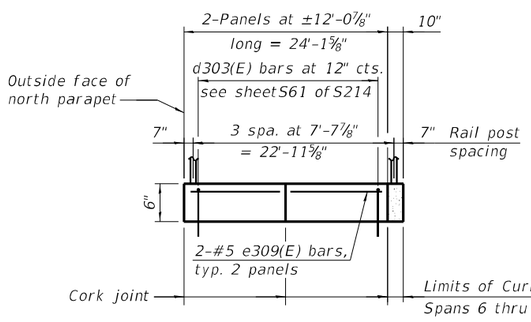

INSIDE ELEVATION OF CURB AT PIER 4

Looking west

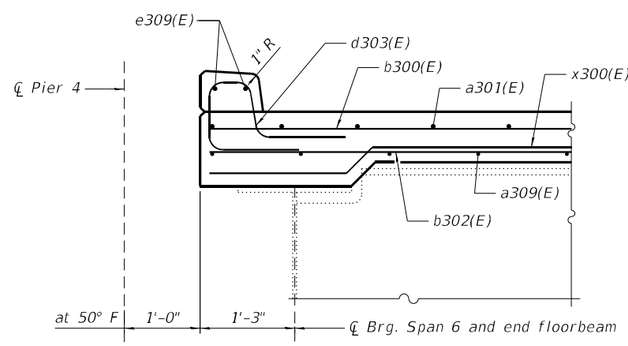

SECTION THRU CURB AT PIER 4

For cross section at curb - Spans 6 thru 8, see sheet S77 of S214

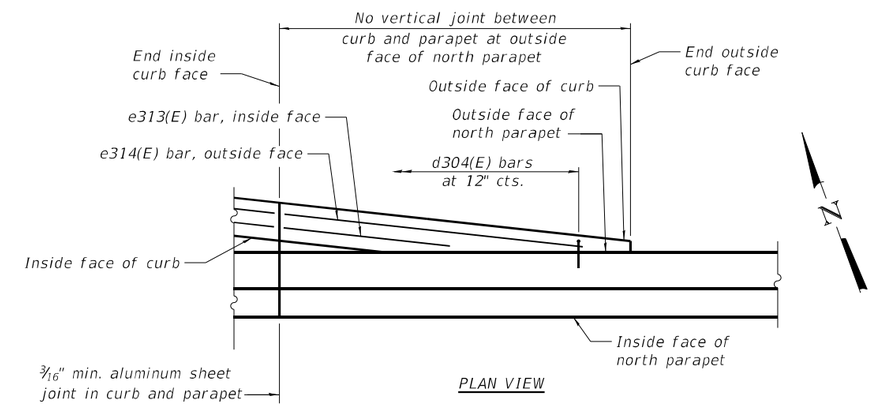

DETAIL B

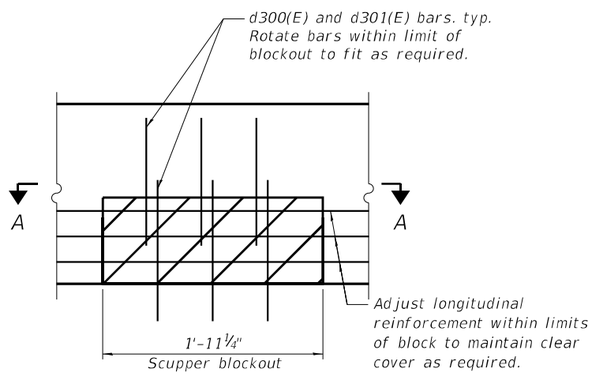

SCUPPER BLOCKOUT DETAIL

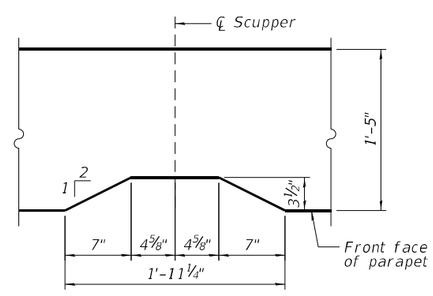

SECTION A-A

Reinforcement not shown for clarity.

Notes:

See sheet S77 of S214 for section thru north parapet.

See sheets S108 and S109 of S214 for pedestrian railing details.

MODEL: Default
FILE NAME: P:\4312-WBK\CLugageRehab\CADD\Structural_SN 090-0115_WBMainBridge_Final Plans\0900115-68E44-073-Sup-WestApp-Parapet4.dgn
3/13/2025 2:55:48 PM

MODJESKI and MASTERS

USER NAME =	DESIGNED - YJ	REVISED -	
	CHECKED - UB	REVISED -	
PLOT SCALE =	DRAWN - AEC	REVISED -	
PLOT DATE =	CHECKED - UB	REVISED -	

STATE OF ILLINOIS
DEPARTMENT OF TRANSPORTATION

SUPERSTRUCTURE - WEST APPROACH - PARAPET - 4
STRUCTURE NO. 090-0115

SHEET S73 OF S214 SHEETS

F.A.P. RTE.	SECTION	COUNTY	TOTAL SHEETS	SHEET NO.
317	(15B-1)BP,BRR	PEO/TAZ	418	243

CONTRACT NO. 68E44

ILLINOIS FED. AID PROJECT

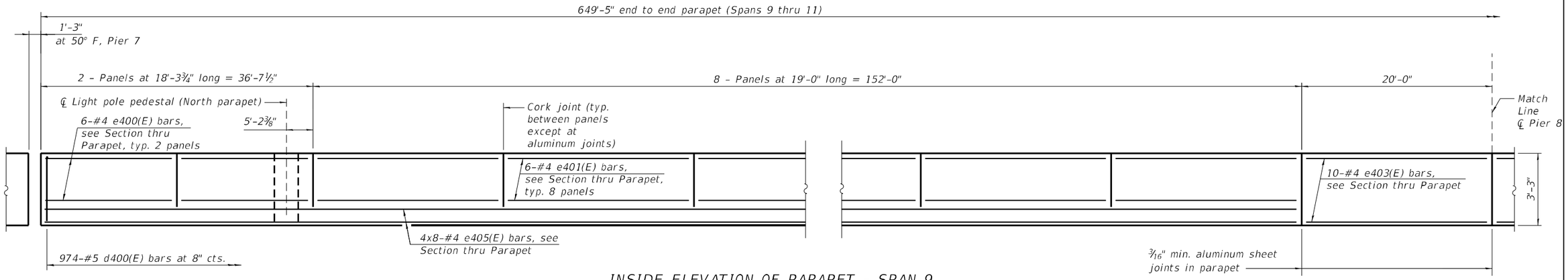

INSIDE ELEVATION OF PARAPET - SPAN 9

North parapet shown, south parapet opposite hand

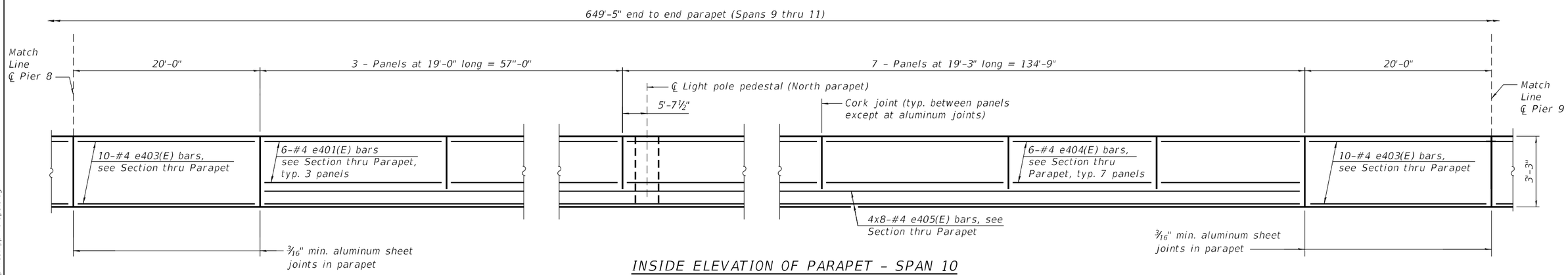

INSIDE ELEVATION OF PARAPET - SPAN 10

North parapet shown, south parapet opposite hand

*Bend bar to fit at shoulder width transition

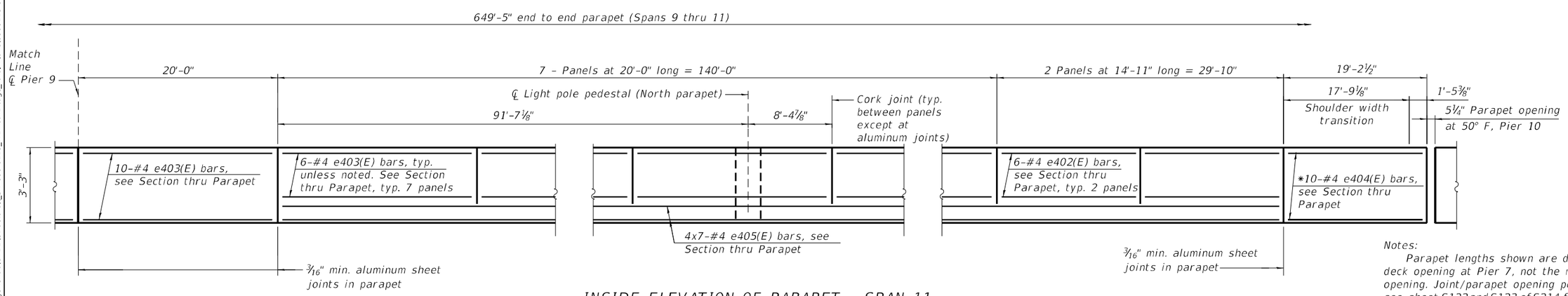

INSIDE ELEVATION OF PARAPET - SPAN 11

North parapet shown, south parapet opposite hand

MINIMUM BAR LAP

#4 bar = 2'-5"

Notes:

Parapet lengths shown are dimensioned to the deck opening at Pier 7, not the modular joint opening. Joint/parapet opening per manufacturer, see sheet S122 and S123 of S214 for details.

See sheet S77 of S214 for Section Thru Parapet.

Bars indicated thus 4 x 8-#6 etc. indicates 4 lines of bars with 8 lengths per line.

MODEL: Default
FILE NAME: P:\4312-WBRc1LuggeRehab\CADD\Structural_SN 090-0115_WBMainBridge_Final Plans\0900115-68E44-074-Sup-WestApp-Parapet5.dgn

MODJESKI and MASTERS	USER NAME =	DESIGNED - UB	REVISED -
		CHECKED - YSS	REVISED -
	PLOT SCALE =	DRAWN - AEC	REVISED -
	PLOT DATE =	CHECKED - UB	REVISED -

STATE OF ILLINOIS
DEPARTMENT OF TRANSPORTATION

SUPERSTRUCTURE - WEST APPROACH - PARAPET - 5
STRUCTURE NO. 090-0115

SHEET S74 OF S214 SHEETS

F.A.P. RTE.	SECTION	COUNTY	TOTAL SHEETS	SHEET NO.
317	(15B-1)BP,BRR	PEO/TAZ	418	244
		CONTRACT NO. 68E44		
		ILLINOIS	FED. AID PROJECT	

3/13/2025 2:55:51 PM

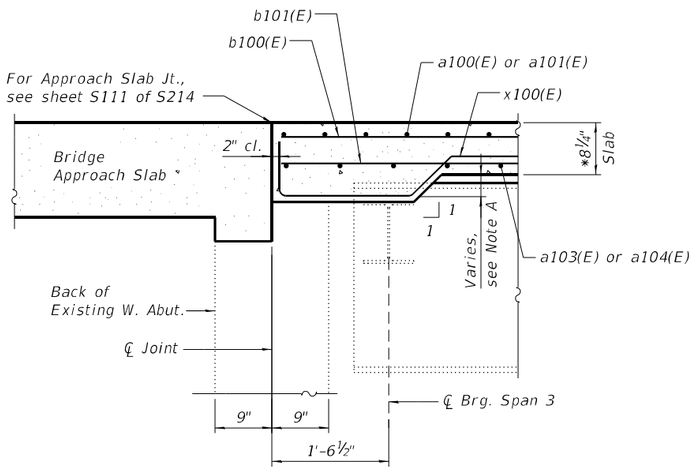

SECTION A-A

* Prior to grinding

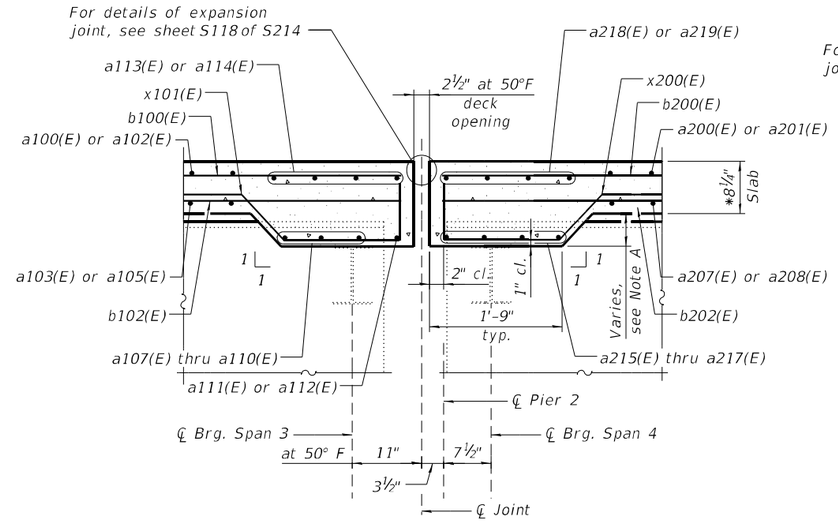

SECTION B-B

Strip Seal Expansion Joint

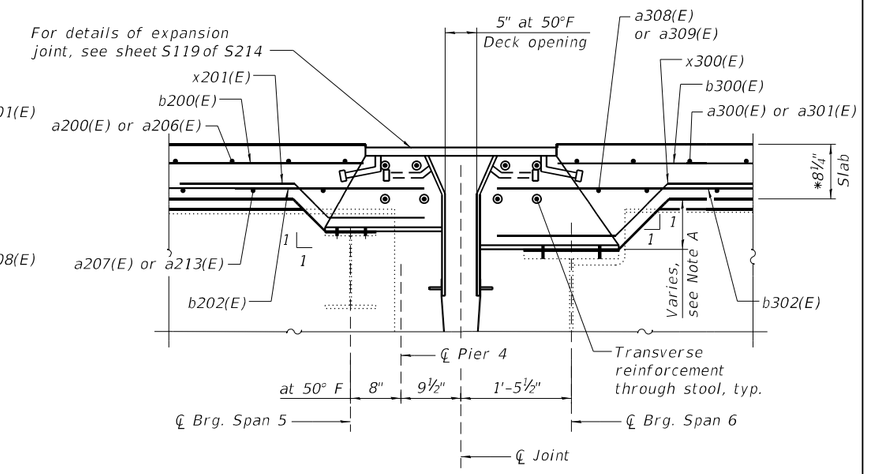

SECTION C-C

Finger ℞ Expansion Joint

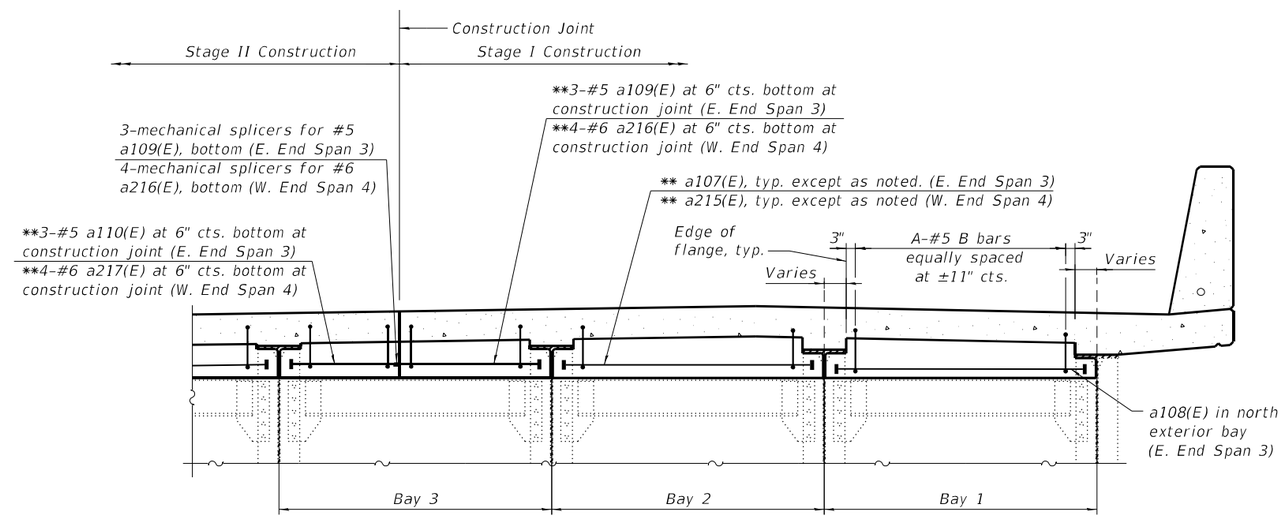

SECTION AT DIAPHRAGM

Looking East
Section at W. end of Span 4 shown,
section at other locations shown in Reinforcement Table similar.

** Headed bars at E. end of Span 3 and W. end of Span 4 only, a111(E), and a112(E) not shown for clarity.

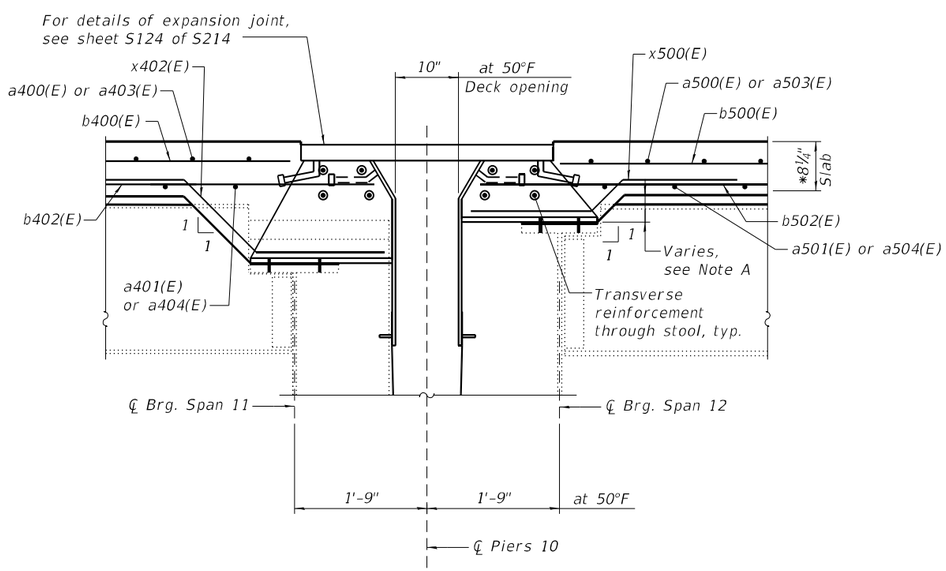

SECTION D-D

Finger ℞ Expansion Joint

Note A:
Dimensions will be provided to the Contractor in accordance with the Special Provision "Contractor Requirements for Dead Load Deflection and Top of Slab Elevation Data".

REINFORCEMENT TABLE

Location	A (Number of B bars in Each Bay)							B bars
	Bay 7	Bay 6	Bay 5	Bay 4	Bay 3	Bay 2	Bay 1	
W. End Span 3	9	9	9	9	9 (1, 8)	9	9	x100(E)
E. End Span 3	5	9	9	9	9 (1, 8)	9	9	x101(E)
W. End Span 4	N/A	9	9	9	9 (4, 5)	9	9	x200(E)
E. End Span 5	N/A	N/A	7	9	9 (4, 5)	9	7	x201(E)
W. End Span 6	11	9	9	9	9 (7, 2)	9	9	x300(E)
E. End Span 11	N/A	N/A	N/A	9	9 (7, 2)	9	9	x402(E)

Notes:
Bay numbering is from South to North.
In Bay 3, a stage construction bay, the number of B bars shown as '9 (4, 5)' indicating 4 bars in Stage II and 5 bars in Stage I.

Note:
See sheet S59 thru S66 of S214 for section locations.

MODEL: Default
FILE NAME: P:\4312-WBK\CLigageRehab\CADD\Structural_SN 090-0115_WBMainBridge_Final Plans\09001115-68E44-075-Sup-WestAppr-Details1.dgn
3/13/2025 2:55:55 PM

MODJESKI and MASTERS

USER NAME =	DESIGNED - UB	REVISED -	
	CHECKED - YSS	REVISED -	
PLOT SCALE =	DRAWN - AEC	REVISED -	
PLOT DATE =	CHECKED - YSS	REVISED -	

STATE OF ILLINOIS
DEPARTMENT OF TRANSPORTATION

SUPERSTRUCTURE - WEST APPROACH - DETAILS - 1
STRUCTURE NO. 090-0115

SHEET S75 OF S214 SHEETS

F.A.P. RTE.	SECTION	COUNTY	TOTAL SHEETS	SHEET NO.
317	(15B-1)BP,BRR	PEO/TAZ	418	245
		CONTRACT NO. 68E44		
		ILLINOIS	FED. AID PROJECT	

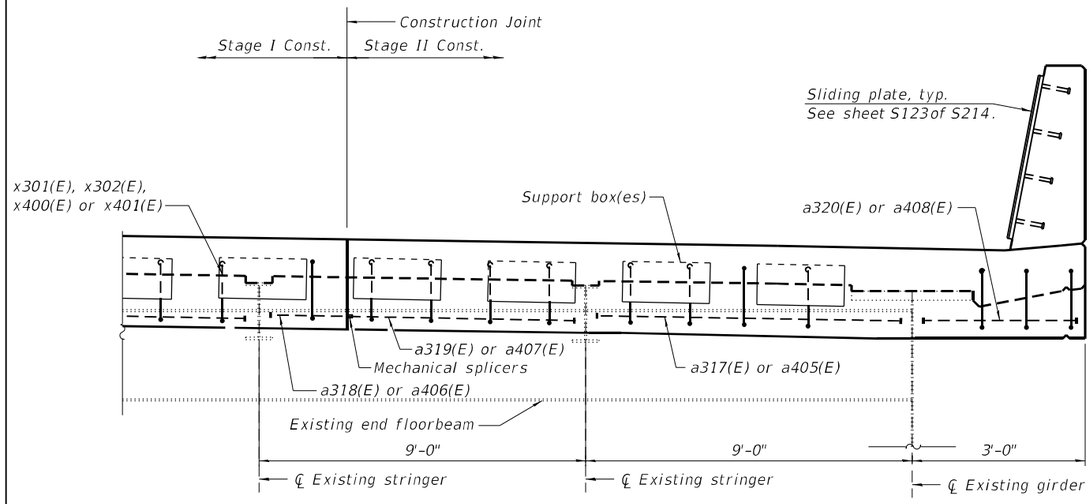

SECTION A-A

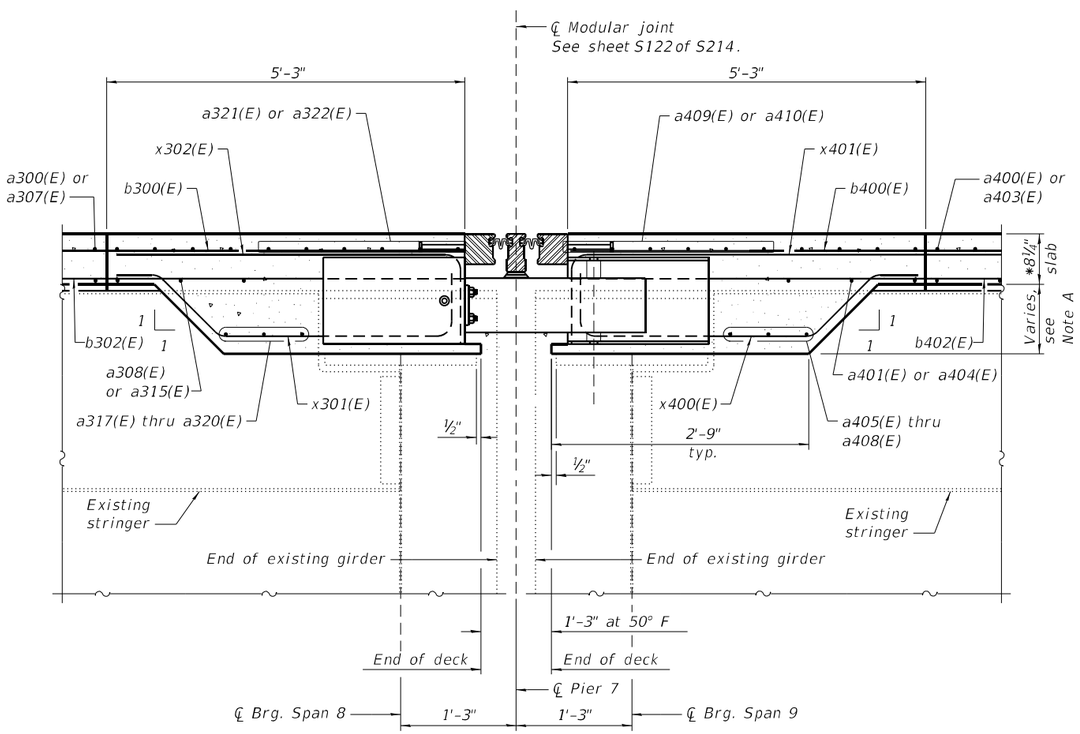

SECTION B-B

(Dimensions shown at right ∠'s to the joint)

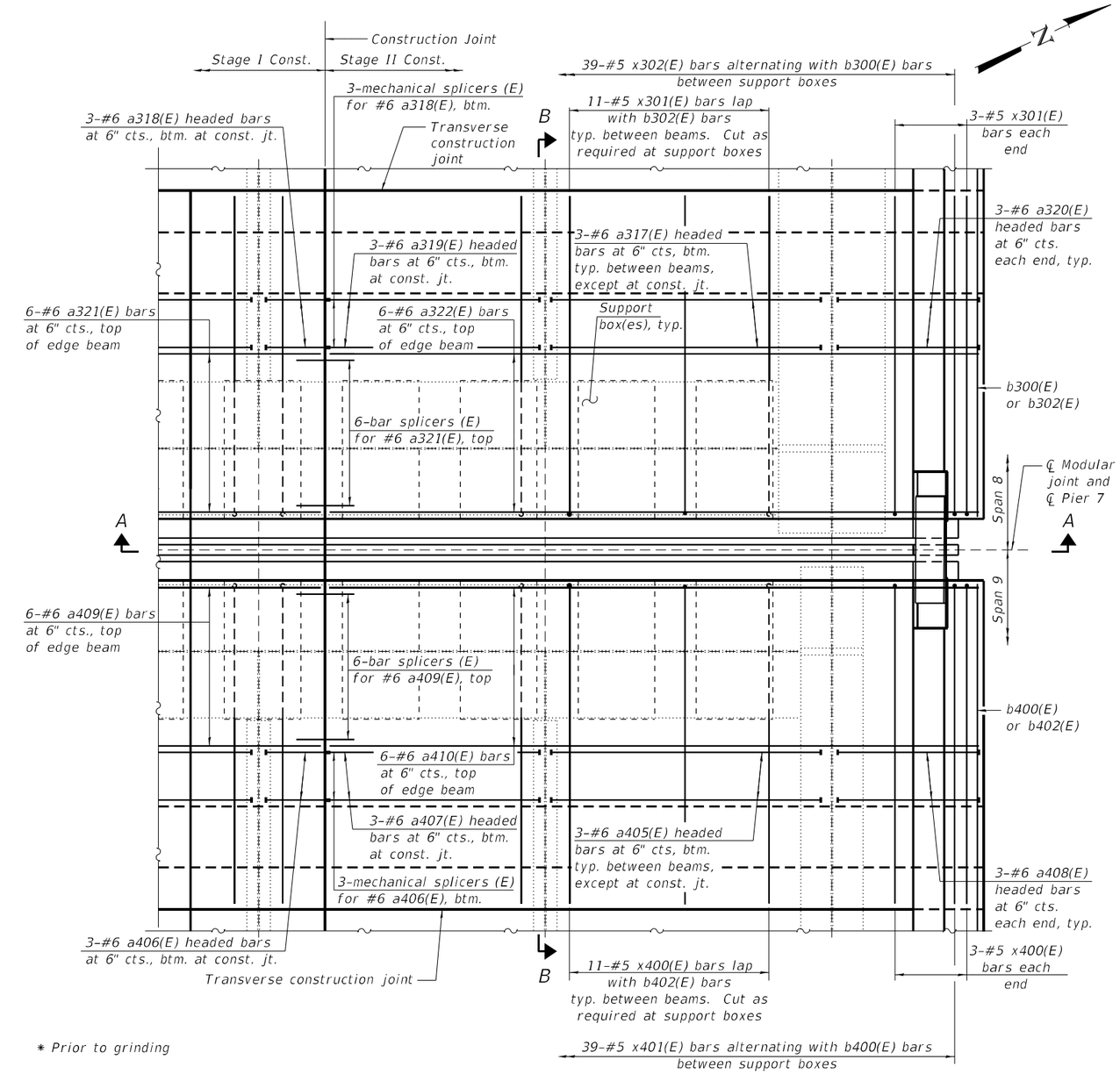

* Prior to grinding

PIER 7 MODULAR JOINT DECK DETAILS - PARTIAL PLAN

Note A:
Dimensions will be provided to the Contractor in accordance with the Special Provision "Contractor Requirements for Dead Load Deflection and Top of Slab Elevation Data".

Notes:
See sheets S61 thru S66 of S214 for primary slab reinforcement size and spacing.
See sheet S123 of S214 for sliding plate details.

MODEL: Default
FILE NAME: P:\d312-WBM\CLigageRehab\CADD\Structural_SN 090-0115_WBMainBridge_Final Plans\0900115-68E44-076-Sup-WestAppr-Details2.dgn
3/13/2025 2:56:00 PM

MODJESKI and MASTERS	USER NAME =	DESIGNED - UB	REVISED -	STATE OF ILLINOIS DEPARTMENT OF TRANSPORTATION
		CHECKED - YSS	REVISED -	
	PLOT SCALE =	DRAWN - AEC	REVISED -	
	PLOT DATE =	CHECKED - YSS	REVISED -	

SUPERSTRUCTURE - WEST APPROACH - DETAILS - 2
STRUCTURE NO. 090-0115
SHEET S76 OF S214 SHEETS

F.A.P. RTE.	SECTION	COUNTY	TOTAL SHEETS	SHEET NO.
317	(15B-1)BP,BRR	PEO/TAZ	418	246
		CONTRACT NO. 68E44		
	ILLINOIS	FED. AID PROJECT		

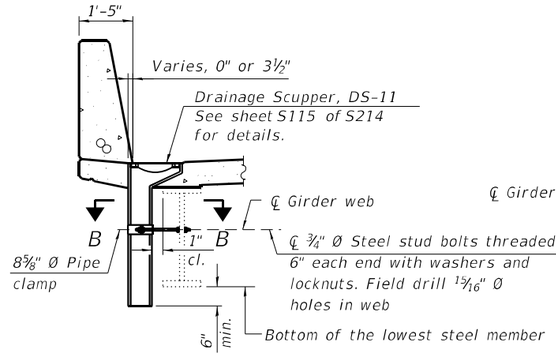

TYPICAL LOCATIONS

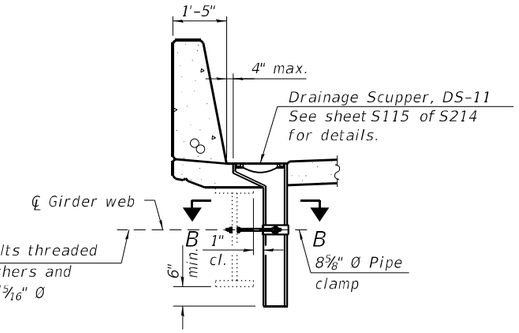

SCUPPER OFFSET FROM PARAPET

SECTION A-A AT DS-11

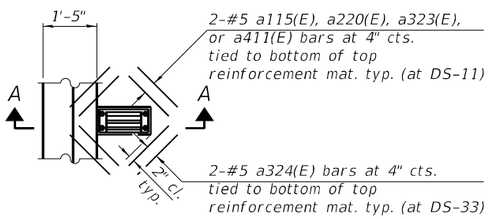

DRAINAGE SCUPPER REINFORCEMENT

DS-11 scupper shown, DS-33 similar
a115(E) - 2, a220(E) - 6, a323(E) - 4, a324(E) - 2,
and a411(E) - 10 locations required

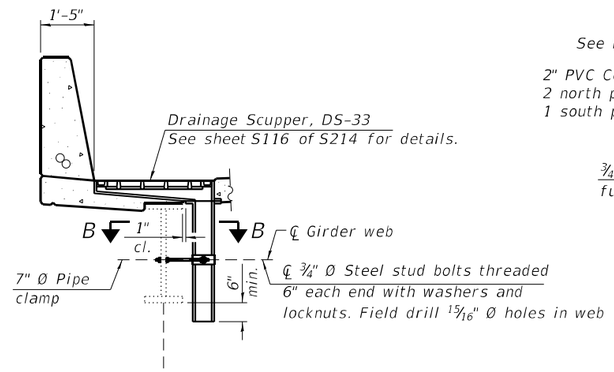

SECTION A-A AT DS-33

Scupper shall be placed ¼" below
the deck surface after grinding.

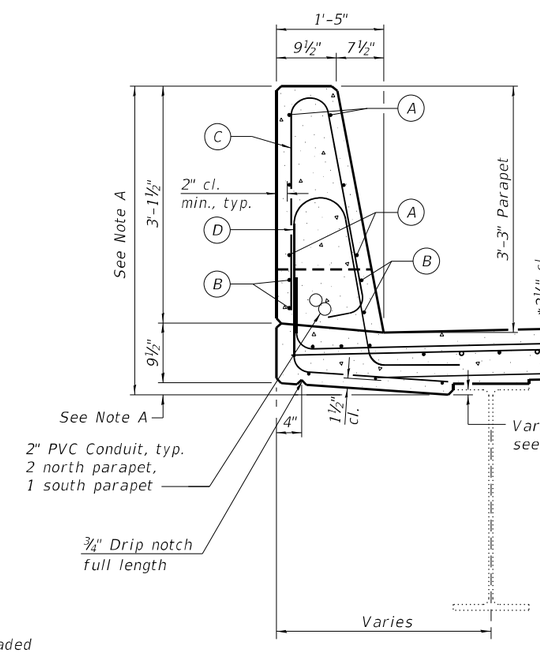

(A) e100(E), e200(E) thru e206(E), e300(E), e303(E), e304(E), or e400(E) thru e404(E)

(B) e101(E), e204(E) thru e209(E), e304(E), e307(E), e308(E), or e403(E) thru e405(E)

(C) d100(E), d200(E), d300(E), or d400(E)

(D) d100(E), d200(E), d300(E), or d400(E)

(E) a100(E) thru a102(E), a200 thru a206(E), a300(E), a307(E), a400(E) or a403(E)

(F) a103(E) thru a105(E), a207 thru a213(E), a308(E), a315(E), a401(E), or a404(E)

a106(E), a214(E), a316(E), or a402(E)

SECTION THRU PARAPET

Typical section show. For north parapet on Spans 6 thru 8
flared cross section, see Section Thru Curb and North Parapet.

Note:
Cut longitudinal reinforcement to clear drainage scuppers.

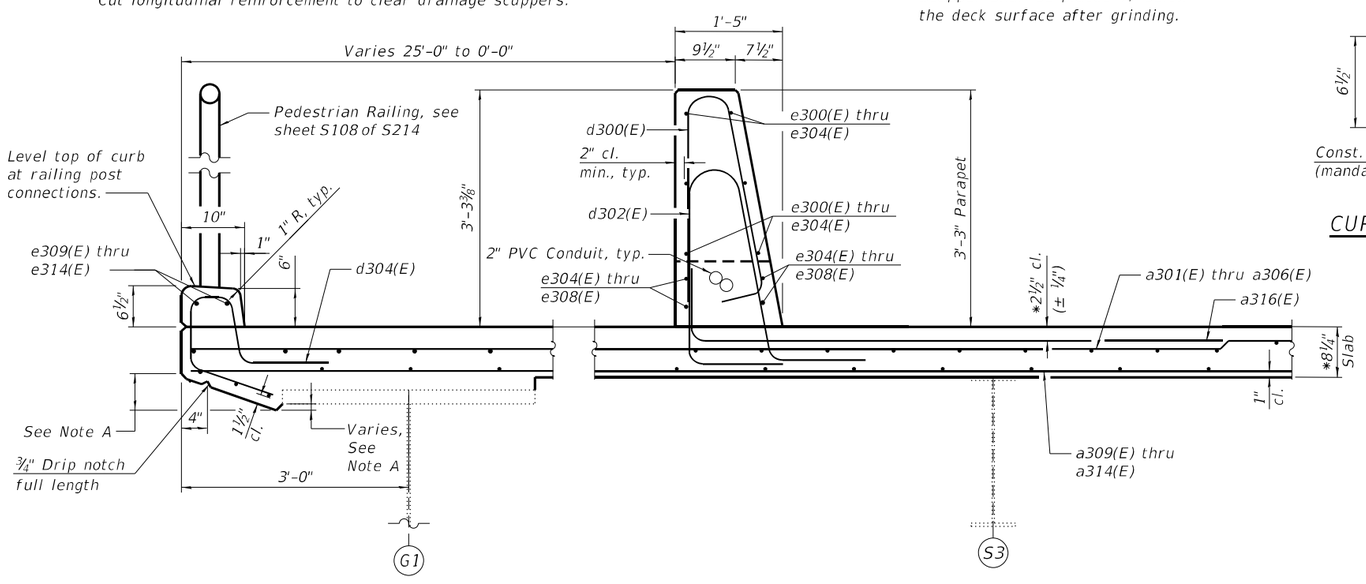

SECTION THRU CURB AND NORTH PARAPET

Spans 6 thru 8 flared cross section
Stringer 3 is only located along a portion of the flared cross section in Spans 6 and 7

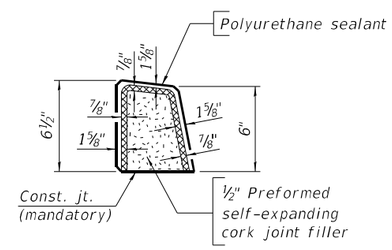

CURB JOINT DETAILS

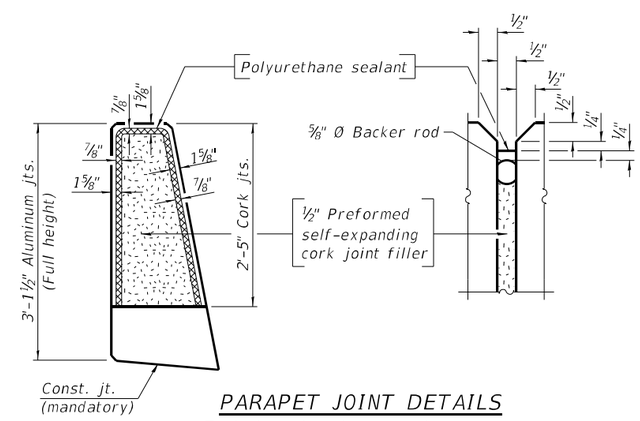

PARAPET JOINT DETAILS

Typical section shown, north parapet on
Span 6 thru 8 flared cross section similar.

*Prior to grinding

Note A:
Dimensions will be provided to the Contractor in accordance with the Special Provision "Contractor Requirements for Dead Load Deflection and Top of Slab Elevation Data".

Notes:
See sheet S78 of S214 for Section B-B.
The 3/16" min. aluminum sheet shall be ASTM B 209 alloy 3003-H14 and coated with 5 mils of either bitumen paint or epoxy paint to minimize reaction with wet concrete. Cost included with Concrete Superstructure.
The polyurethane sealant shall be according to Article 1050.04 of the Std. Spec. and the color shall be gray.

MODEL: Default
FILE NAME: P:\4312-WBK-CLugageRehab\CADDS\Structural_SN 090-0115_WBMainBridge_Final Plans\0900115-68E44-077-Sup-WestAppr-Details3.dgn

MODJESKI and MASTERS	USER NAME =	DESIGNED - YJ	REVISED -
		CHECKED - UB	REVISED -
	PLOT SCALE =	DRAWN - AEC	REVISED -
	PLOT DATE =	CHECKED - UB	REVISED -

STATE OF ILLINOIS
DEPARTMENT OF TRANSPORTATION

SUPERSTRUCTURE - WEST APPROACH - DETAILS - 3
STRUCTURE NO. 090-0115

SHEET S77 OF S214 SHEETS

F.A.P. RTE.	SECTION	COUNTY	TOTAL SHEETS	SHEET NO.
317	(15B-1)BP,BRR	PEO/TAZ	418	247
		CONTRACT NO. 68E44		
	ILLINOIS	FED. AID PROJECT		

3/13/2025 2:56:04 PM

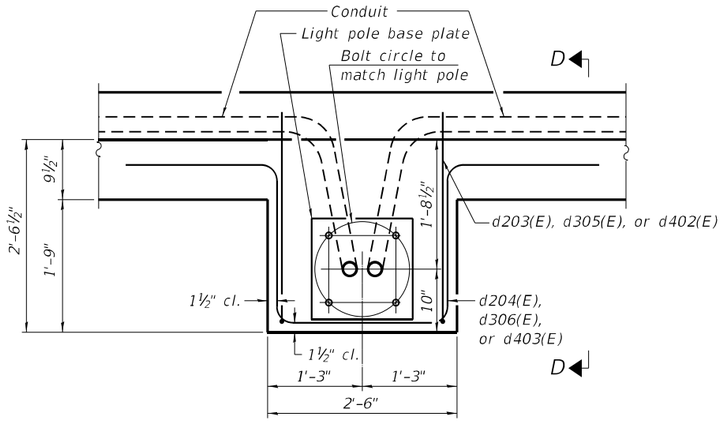

LIGHT POLE PEDESTAL PLAN

7 Locations required
See Highway Standard 812001.

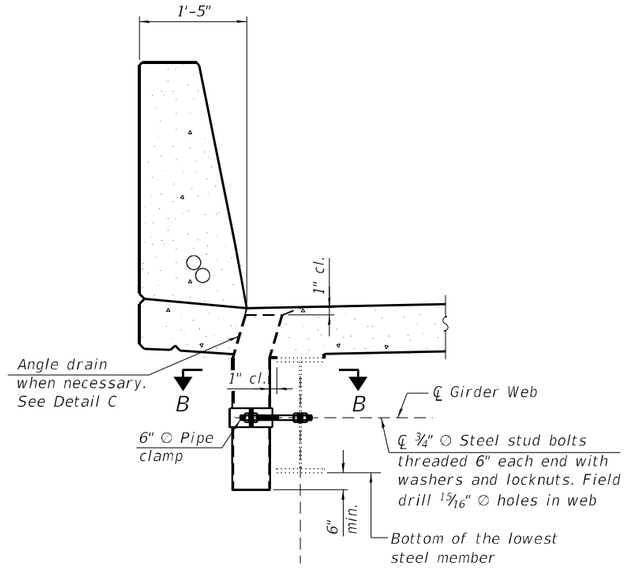

SECTION AT FLOOR DRAIN

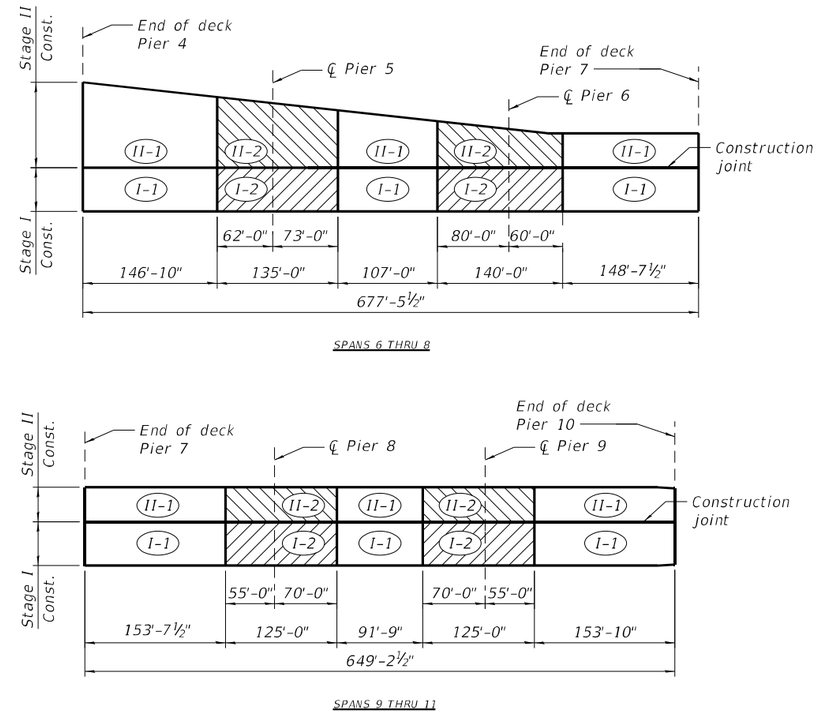

DECK POURING SEQUENCE

When the deck is stopped for the day at one or more of the transverse bonded construction joints in the deck pouring sequence as shown, the next pour shall not be made until both of the following are met:

1. At least 72 hours shall have elapsed from the end of the previous pour.
2. The concrete strength shall have attained a minimum flexural strength of 675 psi or a minimum compressive strength of 4000 psi.

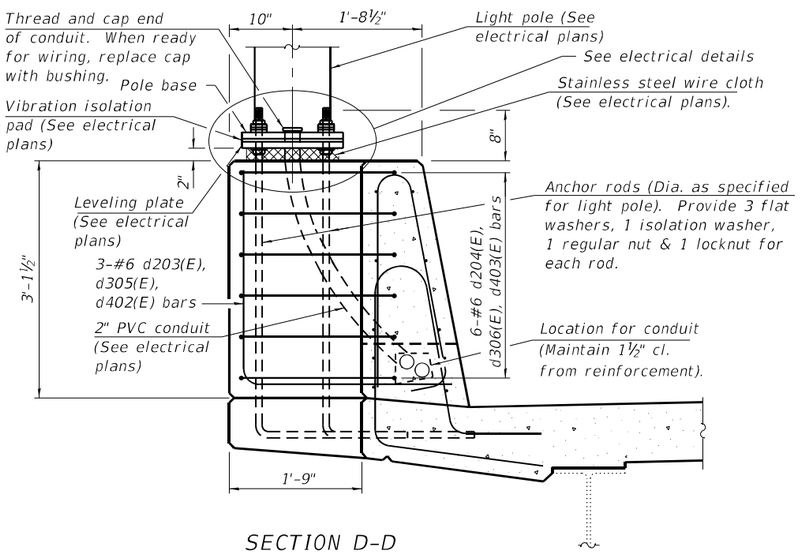

SECTION D-D

Typical section shown, north parapet on
Spans 6 thru 8 flared cross section similar

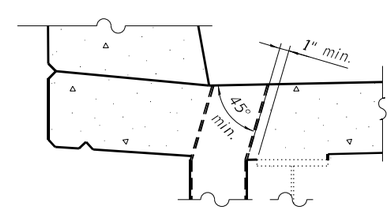

DETAIL C

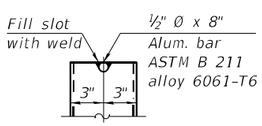

ALUMINUM TUBE

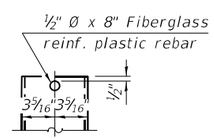

FIBERGLASS PIPE

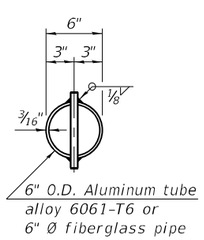

TOP PLAN

(Showing aluminum tube)

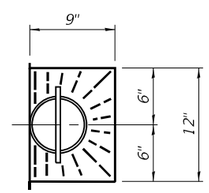

TOP PLAN

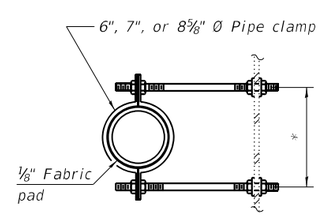

SECTION B-B

*Dimension as required by pipe clamp

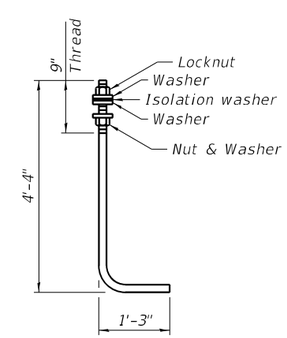

ANCHOR ROD

Diameter as specified for light poles.
(ASTM F 1554 Grade 105) Full length
hot dipped galvanized.

Notes:

Fiberglass pipe shall conform to ASTM D2996, with short-time rupture strength hoop tensile stress of 30,000 p.s.i. minimum.

The exterior surfaces of the floor drains shall be painted according to Article 506 with the finish coat as specified. The exterior surfaces of the drains shall be cleaned according to the Society of Protective Coating's Spec. SSPC-SP1 prior to painting.

The top portion of aluminum floor drains shall be coated with 5 mils of either bitumen paint or epoxy paint to minimize reaction with wet concrete.

The clamping device shall be galvanized according to AASHTO M 232. Cost of clamping device included with Floor Drains and Drainage Scuppers.

Cost of anchor rods is included with Concrete Superstructure.

Apply protective coat to the top surface of the light pole pedestal according to Article 503.19 of the Standard Specifications.

MODEL: Default
FILE NAME: P:\4312-WBMcCLugageRehab\CADD\Structural_SN 090-0115_WBMainBridge_Final Plans\09001115-68E44-078-Sup-WestAppr-Details4.dgn

MODJESKI and MASTERS	USER NAME =	DESIGNED - YJ	REVISED -
		CHECKED - UB	REVISED -
	PLOT SCALE =	DRAWN - AEC	REVISED -
	PLOT DATE =	CHECKED - UB	REVISED -

STATE OF ILLINOIS
DEPARTMENT OF TRANSPORTATION

SUPERSTRUCTURE - WEST APPROACH - DETAILS - 4
STRUCTURE NO. 090-0115

SHEET S78 OF S214 SHEETS

F.A.P. RTE.	SECTION	COUNTY	TOTAL SHEETS	SHEET NO.
317	(15B-1)BP,BRR	PEO/TAZ	418	248

CONTRACT NO. 68E44

ILLINOIS | FED. AID PROJECT

3/13/2025 2:56:09 PM

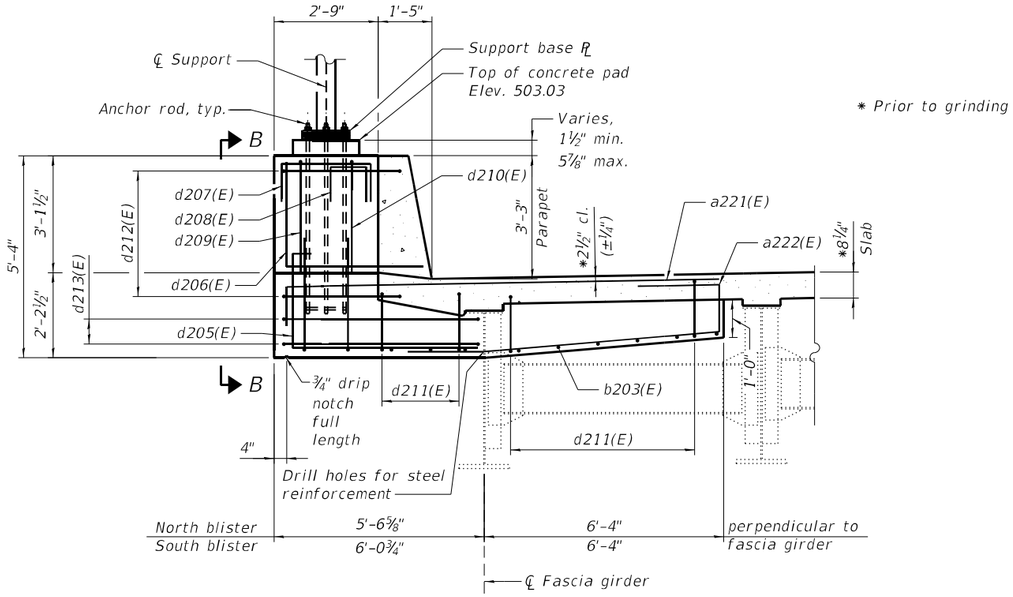

* Prior to grinding

SECTION A-A

Slab and parapet reinforcement not shown for clarity.

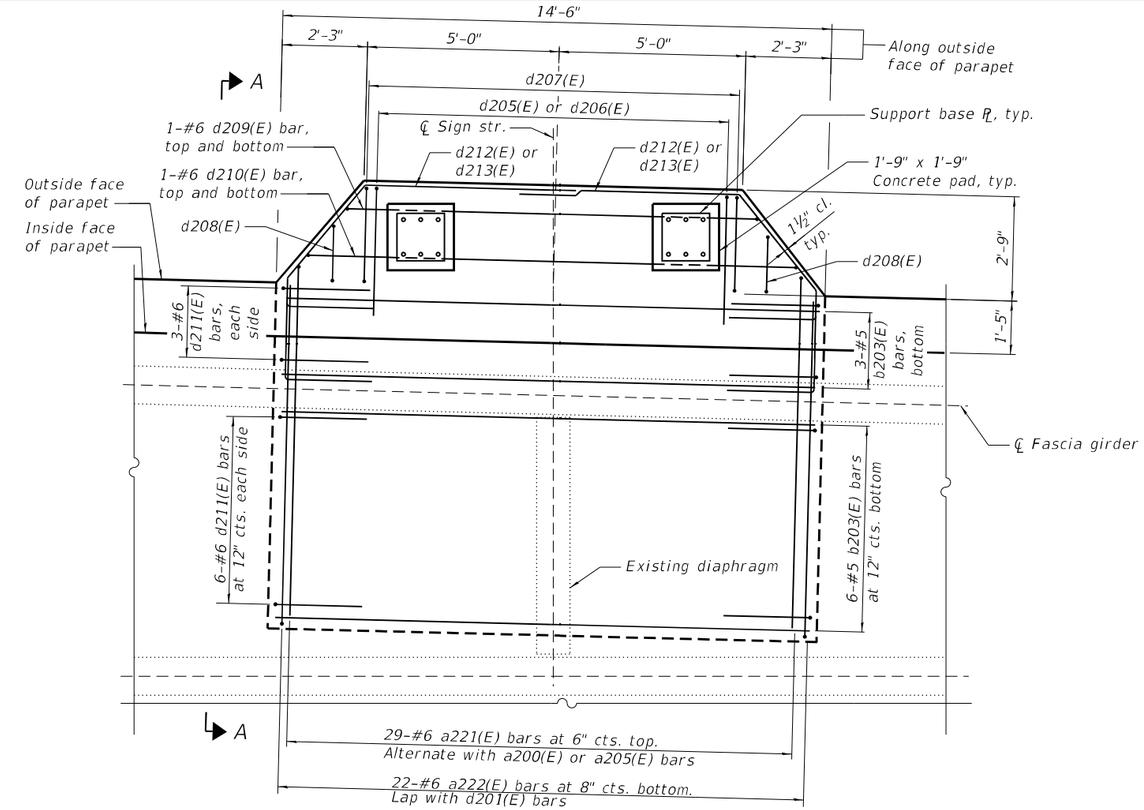

PLAN - CONCRETE BLISTER DETAILS

North blister shown, South blister similar

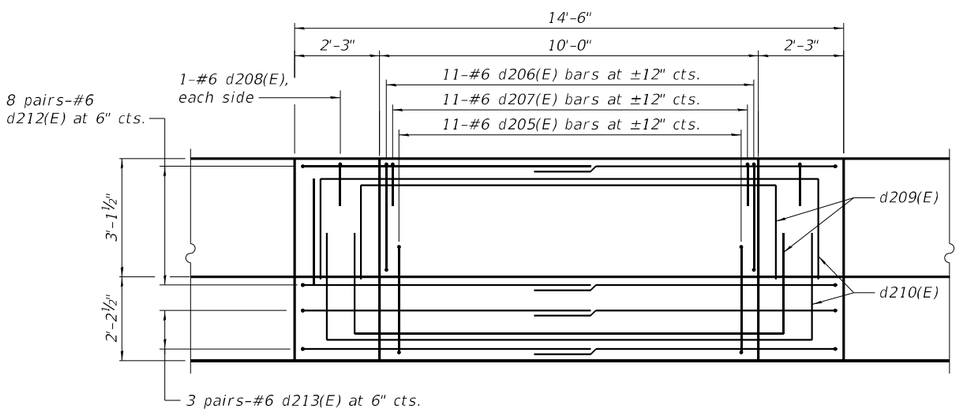

VIEW B-B

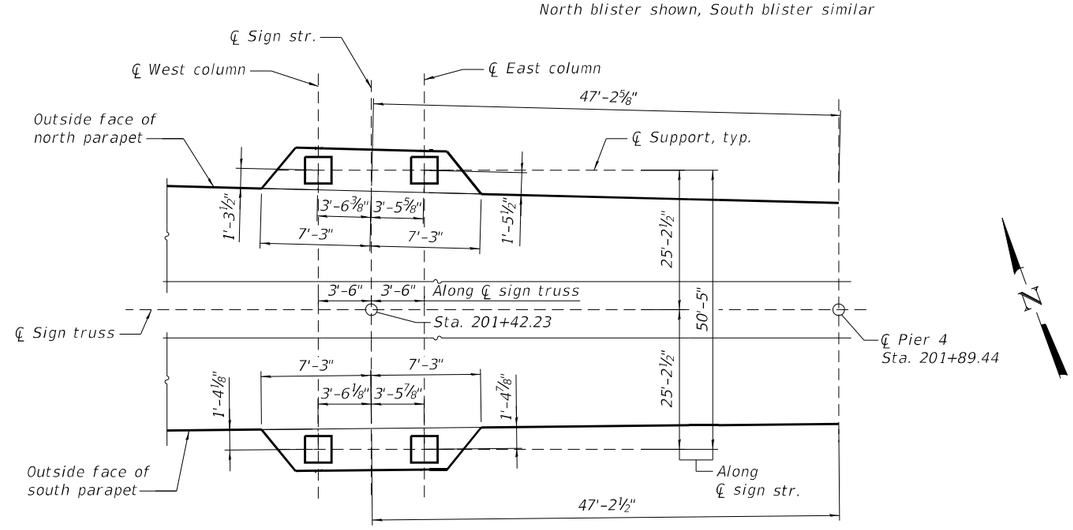

PLAN - CONCRETE BLISTER LAYOUT

Dimensions shown are either along or perpendicular to outside face of parapets, except as noted.

MINIMUM BAR LAP

#6 bar = 4'-0"

Notes:

See Overhead Sign Structure plans, for support, base PL, and anchor rod details.

Cost of anchor rods is included in Concrete Superstructure.

MODJESKI and MASTERS	USER NAME =	DESIGNED - UB	REVISED -	STATE OF ILLINOIS DEPARTMENT OF TRANSPORTATION	SUPERSTRUCTURE - WEST APPROACH - DETAILS - 5 STRUCTURE NO. 090-0115	F.A.P. RTE.	SECTION	COUNTY	TOTAL SHEETS	SHEET NO.
		CHECKED - YSS	REVISED -			317	(15B-1)BP,BRR	PEO/TAZ	418	249
	PLOT SCALE =	DRAWN - AEC	REVISED -			CONTRACT NO. 68E44				
	PLOT DATE =	CHECKED - YSS	REVISED -		SHEET S79 OF S214 SHEETS	ILLINOIS	FED. AID PROJECT			

MODEL: Default
FILE NAME: P:\4312-WBM-CL\UgageRehab\CADD\Structural_SN 090-0115_WBMainBridge_Final Plans\0900115-68E44-079-Sup-WestAppr-Details5.dgn
3/13/2025 2:56:15 PM

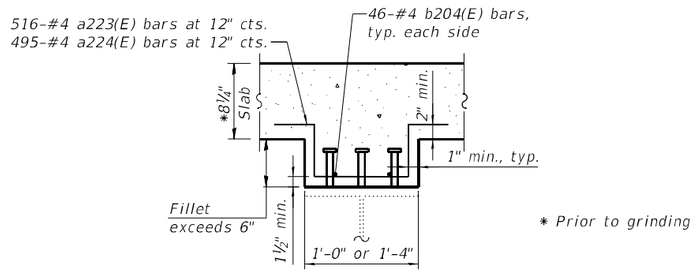

* Prior to grinding

AT GIRDER

DEEP FILLET SECTION - SPANS 4 AND 5

Estimated total number of bars for Girders 1 thru 7 shown, verify in field.

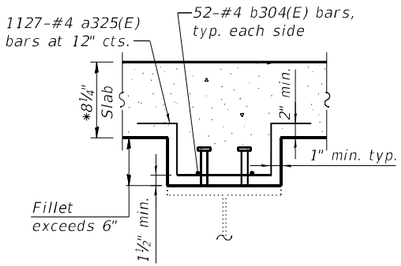

AT STRINGER

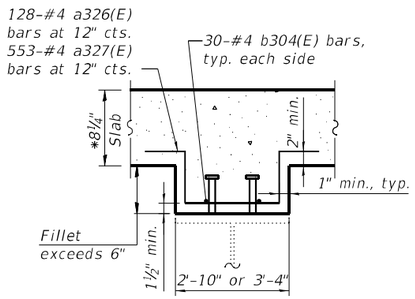

AT GIRDER

DEEP FILLET SECTION - SPANS 6 THRU 8

Estimated total number of bars for Stringers 2 thru 6 and Girder 2 shown, verify in field.

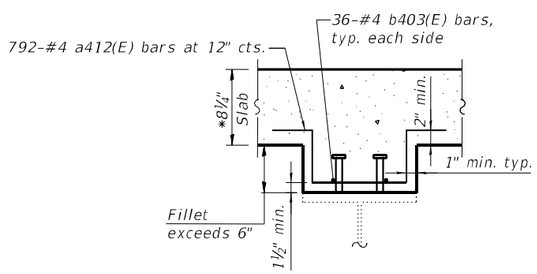

AT GIRDER

DEEP FILLET SECTION - SPANS 9 THRU 11

Estimated total number of bars for Girders 1 and 2 shown, verify in field.

MINIMUM BAR LAP

#4 bar = 2'-5"

Notes:

Bar terminators, paid for separately. See Total Bill of Material.

For bar splicers and mechanical splicer details, see sheet S214 of S214.

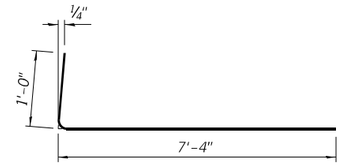

BARS a106(E), a214(E), a316(E), AND a402(E)

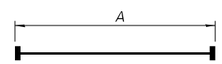

BARS a107(E), a108(E), a215(E), a317(E), a320(E), a405(E), and a408(E)

(Headed. 36-#5 Bar terminators)
(Headed. 100-#6 Bar terminators)

BAR	A
a107(E)	8'-0"
a108(E)	4'-6"
a215(E)	8'-8"
a317(E)	8'-8"
a320(E)	2'-8"
a405(E)	8'-9"
a408(E)	2'-9"

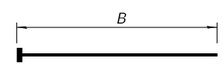

BARS a109(E), a110(E) a216(E), a217(E), a318(E), a319(E), a406(E), AND a407(E)

(Headed. 6-#5 Bar terminators)
(Headed. 20-#6 Bar terminators)

BAR	B
a109(E)	6'-9"
a110(E)	1'-2"
a216(E)	4'-10"
a217(E)	3'-9"
a318(E)	2'-4"
a319(E)	6'-4"
a406(E)	6'-3"
a407(E)	2'-3"

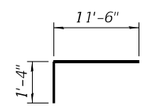

BAR a221(E)

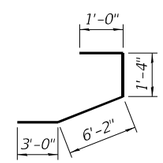

BAR a222(E)

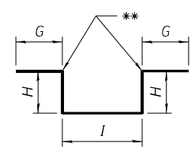

BAR a223(E), a224(E), a325(E), a326(E), a327(E), AND a412(E)

BAR	G	H	I
a223(E)	Varies 6" to 1'-3½"	Varies 6" to 1'-3½"	10"
a224(E)	Varies 6" to 11½"	Varies 6" to 11½"	1'-2"
a325(E)	Varies 6" to 1'-2¼"	Varies 6" to 1'-2¼"	5"
a326(E)	Varies 6" to 8¾"	Varies 9" to 11¾"	2'-8"
a327(E)	Varies 6" to 1'-4¼"	Varies 8" to 1'-6¼"	3'-2"
a412(E)	Varies 6" to 8½"	Varies 6½" to 9"	2'-4"

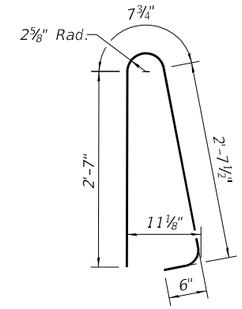

BARS d100(E), d200(E), d300(E), AND d400(E)

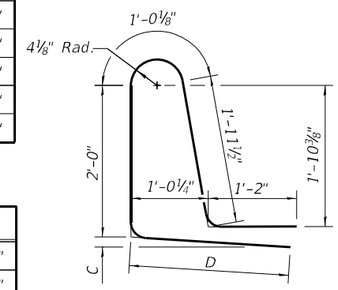

BARS d101(E), d201(E), d202(E), d301(E), d302(E), AND d401(E)

BAR	C	D
d101(E)	5"	1'-11"
d201(E)	5"	1'-10"
d202(E)	5"	2'-3"
d301(E)	5"	1'-6"
d302(E)	0"	1'-6"
d401(E)	5"	1'-11"

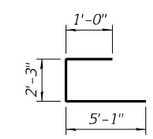

BAR d205(E)

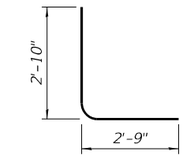

BARS d203(E), d305(E), AND d402(E)

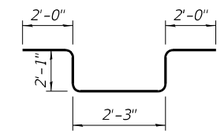

BARS d204(E), d306(E), AND d403(E)

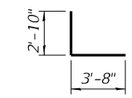

BAR d206(E)

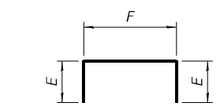

BAR d207(E), d208(E), d209(E), d210(E), AND d211(E)

BAR	E	F
d207(E)	1'-0"	2'-5"
d208(E)	1'-0"	1'-2"
d209(E)	3'-0"	11'-2"
d210(E)	3'-0"	12'-8"
d211(E)	2'-0"	1'-6"

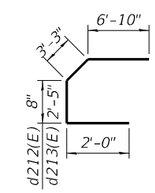

BAR d212(E) and d213(E)

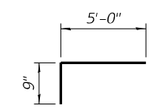

BARs x302(E) and X401(E)

** Contractor shall bend this location to fit in field

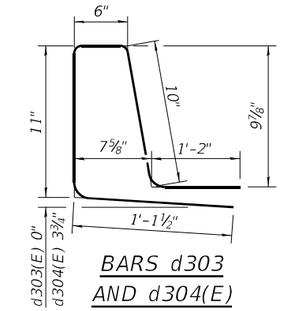

BARS d303 AND d304(E)

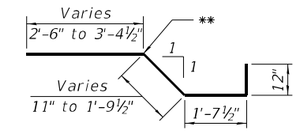

BAR x100(E)

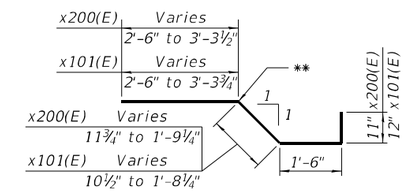

BARS x101(E) AND x200(E)

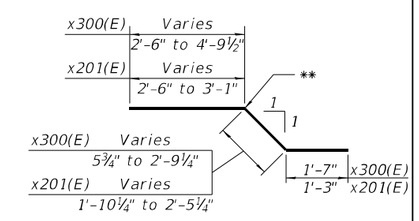

BARs x201(E) AND x300(E)

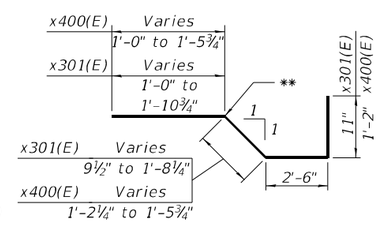

BARS x301(E) AND x400(E)

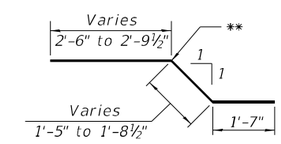

BAR x402(E)

USER NAME =	DESIGNED - UB	REVISED -
	CHECKED - YSS	REVISED -
PLOT SCALE =	DRAWN - AEC	REVISED -
PLOT DATE =	CHECKED - YSS	REVISED -

MODJESKI and MASTERS

STATE OF ILLINOIS
DEPARTMENT OF TRANSPORTATION

SUPERSTRUCTURE - WEST APPROACH - DETAILS - 6
STRUCTURE NO. 090-0115

SHEET S80 OF S214 SHEETS

F.A.P. RTE.	SECTION	COUNTY	TOTAL SHEETS	SHEET NO.
317	(15B-1)BP,BRR	PEO/TAZ	418	250

CONTRACT NO. 68E44

ILLINOIS | FED. AID PROJECT

MODEL: Default
FILE NAME: P:\4312-VBM\CLugageRehab\CADD\Structural_SN 090-0115_WBMainBridge_Final Plans\0900115-68E44-080-Sup-WestApp-Details6.dgn

3/13/2025 2:56:18 PM

SUPERSTRUCTURE SPAN 3
BILL OF MATERIAL

Bar	No.	Size	Length	Shape
a100(E)	90	#5	26'-1"	
a101(E)	45	#5	37'-3"	
a102(E)	45	#5	35'-5"	
a103(E)	73	#5	25'-10"	
a104(E)	37	#5	37'-0"	
a105(E)	36	#5	35'-2"	
a106(E)	180	#6	8'-4"	
a107(E)	15	#5	8'-1"	
a108(E)	3	#5	4'-6"	
a109(E)	3	#5	6'-9"	
a110(E)	3	#5	1'-2"	
a111(E)	1	#5	26'-1"	
a112(E)	1	#5	33'-7"	
a113(E)	4	#5	26'-1"	
a114(E)	4	#5	33'-7"	
a115(E)	16	#5	1'-6"	
b100(E)	132	#5	26'-9"	
b101(E)	69	#5	30'-3"	
b102(E)	65	#5	23'-3"	
d100(E)	152	#5	6'-5"	
d101(E)	152	#5	8'-1"	
e100(E)	36	#4	16'-5"	
e101(E)	16	#4	26'-3"	
x100(E)	63	#5	6'-11"	
x101(E)	59	#5	6'-8"	
Concrete Superstructure			Cu. Yd.	108.6
Protective Coat			Sq. Yd.	377
Reinforcement Bars, Epoxy Coated			Pound	24,610

SUPERSTRUCTURE SPANS 4 & 5
BILL OF MATERIAL

Bar	No.	Size	Length	Shape
a200(E)	472	#5	26'-1"	
a201(E)	79	#5	33'-5"	
a202(E)	79	#5	30'-6"	
a203(E)	79	#5	27'-7"	
a204(E)	79	#5	25'-6"	
a205(E)	78	#5	23'-7"	
a206(E)	78	#5	22'-8"	
a207(E)	378	#5	25'-10"	
a208(E)	63	#5	33'-2"	
a209(E)	63	#5	30'-3"	
a210(E)	63	#5	27'-4"	
a211(E)	63	#5	25'-3"	
a212(E)	63	#5	23'-4"	
a213(E)	63	#5	22'-5"	
a214(E)	944	#6	8'-4"	
a215(E)	20	#6	8'-8"	
a216(E)	4	#6	4'-10"	
a217(E)	4	#6	3'-9"	
a218(E)	4	#6	26'-1"	
a219(E)	4	#6	33'-7"	
a220(E)	48	#5	1'-6"	
a221(E)	58	#6	12'-10"	
a222(E)	44	#6	11'-6"	
a223(E)	516	#4	4'-5"	
a224(E)	495	#4	4'-1"	
b200(E)	501	#5	29'-7"	
b201(E)	150	#6	34'-5"	
b202(E)	603	#5	27'-0"	
b203(E)	18	#5	14'-3"	
b204(E)	92	#4	25'-0"	
d200(E)	716	#5	6'-5"	
d201(E)	358	#5	8'-0"	
d202(E)	358	#5	8'-5"	
d203(E)	3	#6	5'-7"	
d204(E)	6	#6	10'-5"	
d205(E)	22	#6	8'-4"	
d206(E)	22	#6	6'-6"	
d207(E)	22	#6	4'-5"	
d208(E)	4	#6	3'-2"	
d209(E)	4	#6	17'-2"	
d210(E)	4	#6	18'-8"	
d211(E)	36	#6	5'-6"	
d212(E)	32	#6	12'-9"	
d213(E)	12	#6	14'-6"	
e200(E)	30	#4	16'-11"	
e201(E)	6	#4	19'-2"	
e202(E)	6	#4	19'-3"	
e203(E)	6	#4	18'-4"	
e204(E)	10	#4	15'-9"	
e205(E)	106	#4	19'-9"	
e206(E)	10	#4	16'-8"	
e207(E)	16	#4	23'-3"	
e208(E)	16	#4	21'-8"	
e209(E)	32	#4	26'-8"	
x200(E)	54	#5	6'-10"	
x201(E)	41	#5	6'-3"	
Concrete Superstructure			Cu. Yd.	475.4
Protective Coat			Sq. Yd.	1,521
Reinforcement Bars, Epoxy Coated			Pound	123,340

SUPERSTRUCTURE SPANS 6-8
BILL OF MATERIAL

Bar	No.	Size	Length	Shape
a300(E)	1524	#5	23'-9"	
a301(E)	223	#5	46'-8"	
a302(E)	223	#5	41'-1"	
a303(E)	223	#5	35'-6"	
a304(E)	223	#5	29'-11"	
a305(E)	132	#5	24'-4"	
a306(E)	137	#5	21'-0"	
a307(E)	363	#5	18'-9"	
a308(E)	1202	#5	23'-6"	
a309(E)	175	#5	46'-5"	
a310(E)	175	#5	40'-10"	
a311(E)	175	#5	35'-3"	
a312(E)	175	#5	29'-8"	
a313(E)	105	#5	24'-1"	
a314(E)	112	#5	20'-9"	
a315(E)	285	#5	18'-6"	
a316(E)	3048	#6	8'-4"	
a317(E)	9	#6	8'-8"	
a318(E)	3	#6	2'-4"	
a319(E)	3	#6	6'-4"	
a320(E)	6	#6	2'-8"	
a321(E)	6	#6	23'-9"	
a322(E)	6	#6	18'-9"	
a323(E)	32	#5	1'-6"	
a324(E)	16	#5	2'-0"	
a325(E)	1127	#4	3'-10"	
a326(E)	128	#4	5'-8"	
a327(E)	553	#4	7'-3"	
b300(E)	1488	#5	29'-5"	
b301(E)	295	#6	30'-11"	
b302(E)	1704	#5	28'-6"	
b303(E)	230	#6	33'-10"	
b304(E)	164	#4	25'-0"	
d300(E)	2034	#5	6'-5"	
d301(E)	1272	#5	7'-7"	
d302(E)	762	#5	7'-7"	
d303(E)	25	#5	4'-7"	
d304(E)	509	#5	4'-7"	
d305(E)	9	#6	5'-7"	
d306(E)	18	#6	10'-5"	
e300(E)	24	#4	14'-2"	
e301(E)	24	#4	17'-2"	
e302(E)	30	#4	17'-9"	
e303(E)	24	#4	14'-0"	
e304(E)	356	#4	19'-9"	
e305(E)	16	#4	26'-6"	
e306(E)	16	#4	24'-4"	
e307(E)	96	#4	25'-9"	
e308(E)	72	#4	26'-7"	
e309(E)	4	#5	11'-9"	
e310(E)	20	#5	18'-8"	
e311(E)	8	#5	19'-9"	
e312(E)	24	#5	18'-2"	
e313(E)	1	#5	22'-1"	
e314(E)	1	#5	6'-10"	
x300(E)	65	#5	6'-11"	
x301(E)	50	#5	6'-2"	
x302(E)	39	#5	5'-9"	
Concrete Superstructure			Cu. Yd.	1,293.2
Protective Coat			Sq. Yd.	3,663
Reinforcement Bars, Epoxy Coated			Pound	367,880

SUPERSTRUCTURE SPANS 9-11
BILL OF MATERIAL

Bar	No.	Size	Length	Shape
a400(E)	1410	#5	23'-9"	
a401(E)	1108	#5	23'-6"	
a402(E)	2820	#6	8'-4"	
a403(E)	1410	#5	18'-9"	
a404(E)	1108	#5	18'-6"	
a405(E)	9	#6	8'-9"	
a406(E)	3	#6	6'-3"	
a407(E)	3	#6	2'-3"	
a408(E)	6	#6	2'-9"	
a409(E)	6	#6	23'-9"	
a410(E)	6	#6	18'-9"	
a411(E)	80	#5	1'-6"	
a412(E)	792	#4	4'-10"	
b400(E)	1150	#5	29'-4"	
b401(E)	312	#6	34'-9"	
b402(E)	1300	#5	28'-4"	
b403(E)	72	#4	25'-0"	
d400(E)	1948	#5	6'-5"	
d401(E)	1948	#5	8'-1"	
d402(E)	9	#6	5'-7"	
d403(E)	18	#6	10'-5"	
e400(E)	24	#4	18'-0"	
e401(E)	132	#4	18'-9"	
e402(E)	24	#4	14'-8"	
e403(E)	164	#4	19'-9"	
e404(E)	104	#4	19'-0"	
e405(E)	184	#4	26'-4"	
x400(E)	50	#5	6'-2"	
x401(E)	39	#5	5'-9"	
x402(E)	36	#5	5'-10"	
Concrete Superstructure			Cu. Yd.	1,010.4
Protective Coat			Sq. Yd.	3,490
Reinforcement Bars, Epoxy Coated			Pound	280,170

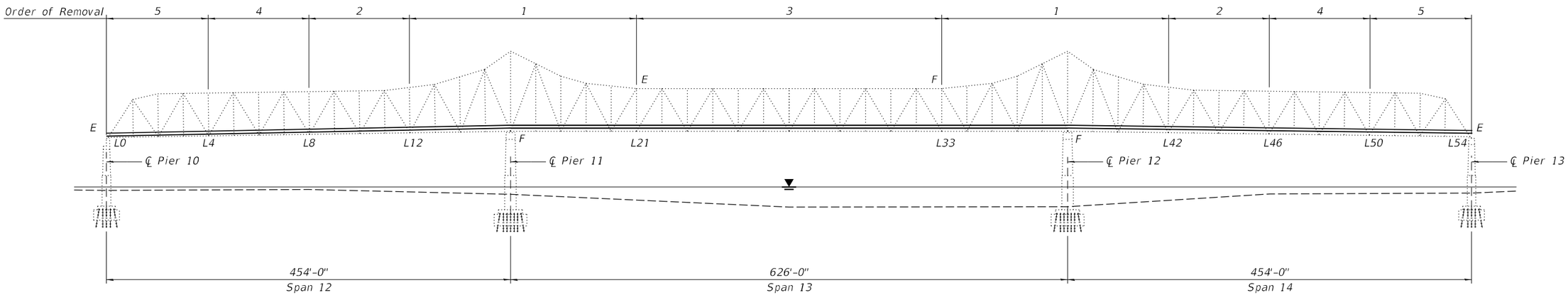

DECK REMOVAL SEQUENCE

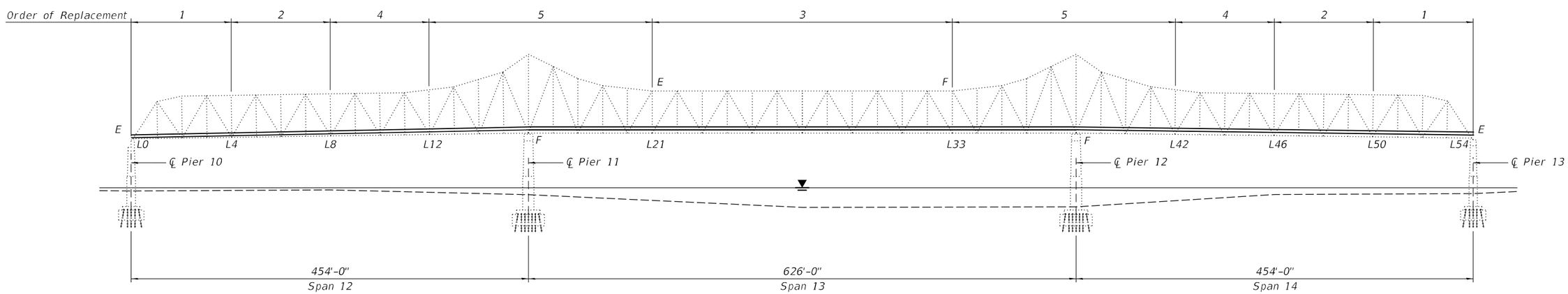

DECK REPLACEMENT SEQUENCE

Notes:

The removal and replacement sequences shown on this plan apply to both Stage I and Stage II construction.

Deck Replacement Sequences 1 and 2 may be performed simultaneously.

MODEL: Default
FILE NAME: P:\4312-VBM\CLugageRehab\CADD\Structural_SN 090-0115_WBMainBridge_Final Plans\09001115-68E44-082-DeckRmvReplSeq.dgn

MODJESKI and MASTERS

USER NAME =	DESIGNED - YSS	REVISED -	
	CHECKED - UB	REVISED -	
PLOT SCALE =	DRAWN - ELK	REVISED -	
PLOT DATE =	CHECKED - YSS	REVISED -	

STATE OF ILLINOIS
DEPARTMENT OF TRANSPORTATION

TRUSS DECK REMOVAL AND REPLACEMENT SEQUENCE
STRUCTURE NO. 090-0115

SHEET S82 OF S214 SHEETS

F.A.P. RTE.	SECTION	COUNTY	TOTAL SHEETS	SHEET NO.
317	(15B-1)BP,BRR	PEO/TAZ	418	252
		CONTRACT NO. 68E44		
	ILLINOIS	FED. AID PROJECT		

3/13/2025 2:56:26 PM

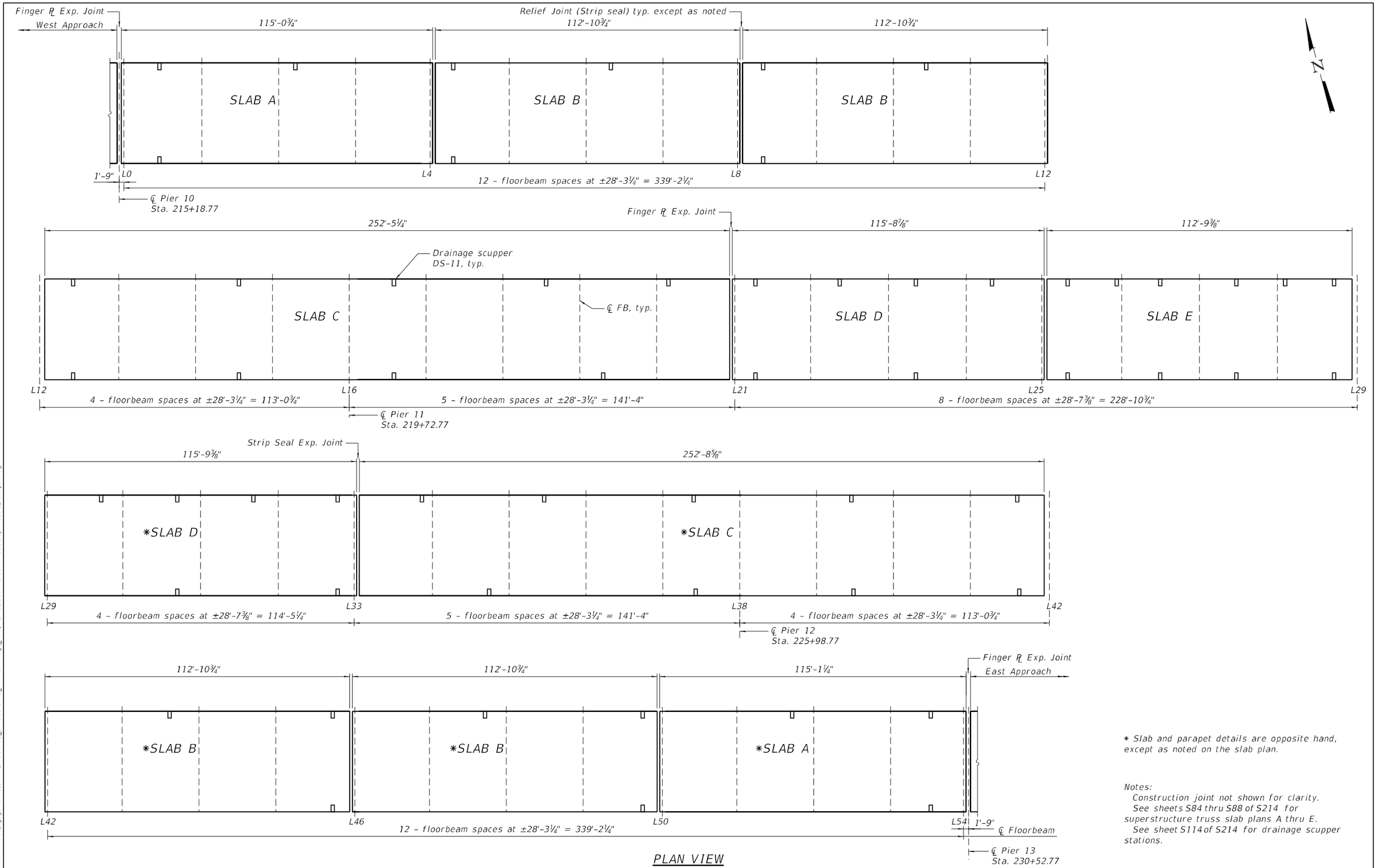

PLAN VIEW

* Slab and parapet details are opposite hand, except as noted on the slab plan.

Notes:
Construction joint not shown for clarity.
See sheets S84 thru S88 of S214 for superstructure truss slab plans A thru E.
See sheet S114 of S214 for drainage scupper stations.

MODEL: Default
FILE NAME: P:\4312-WBMcCLugageRehab\CADD\Structural_SN 090-0115_WBMainBridge_Final Plans\09001115-68E44-083-Sup-Truss-SlabLayout.dgn

3/13/2025 2:56:29 PM

MODJESKI and MASTERS

USER NAME =	DESIGNED - YJ	REVISED -	
	CHECKED - YSS	REVISED -	
PLOT SCALE =	DRAWN - AEC	REVISED -	
PLOT DATE =	CHECKED - YJ	REVISED -	

STATE OF ILLINOIS
DEPARTMENT OF TRANSPORTATION

SUPERSTRUCTURE - TRUSS SPANS - SLAB LAYOUT
STRUCTURE NO. 090-0115

SHEET S83 OF S214 SHEETS

F.A.P. RTE.	SECTION	COUNTY	TOTAL SHEETS	SHEET NO.
317	(15B-1)BP,BRR	PEO/TAZ	418	253
		CONTRACT NO. 68E44		
	ILLINOIS	FED. AID PROJECT		

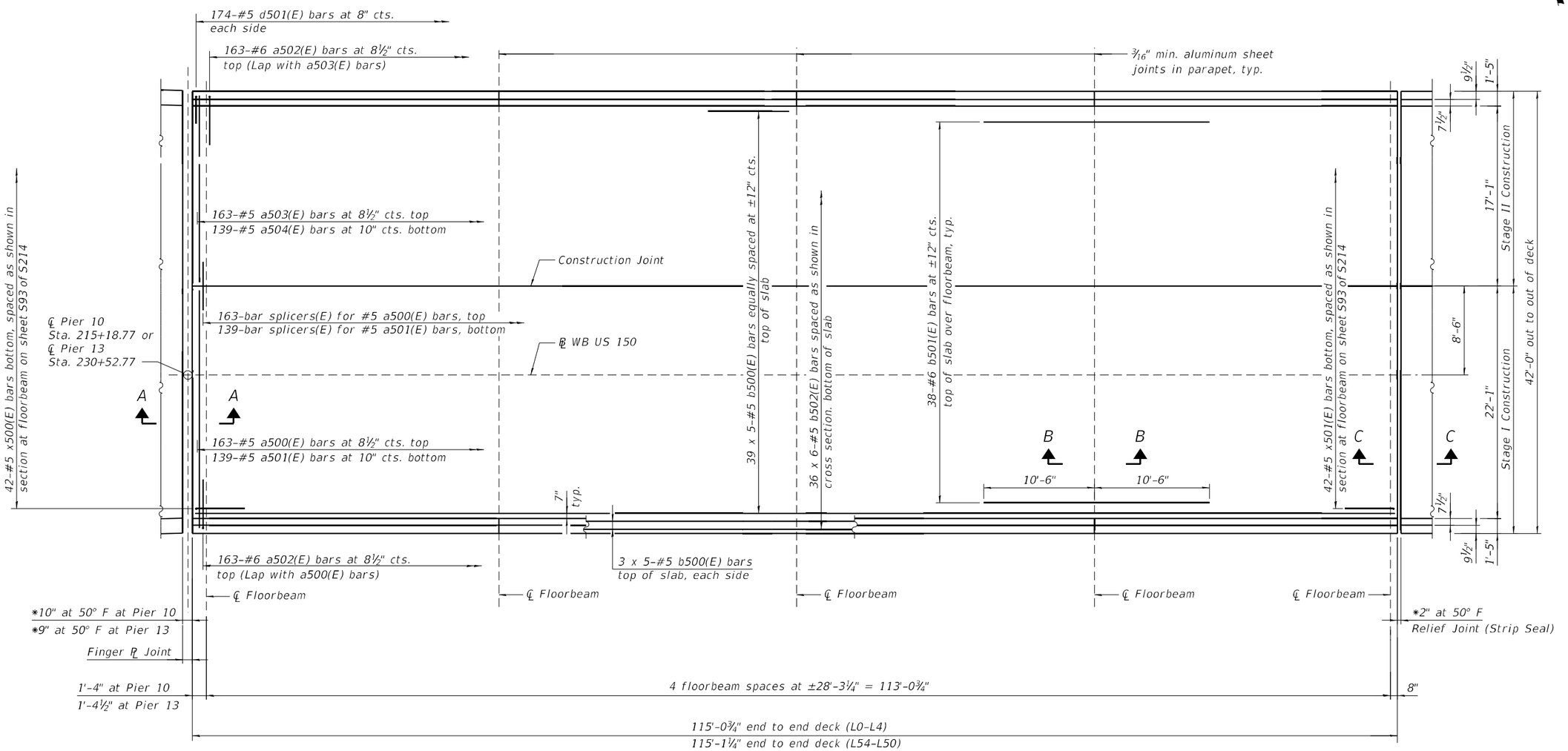

MINIMUM BAR LAP

#5 bar = 3'-6"

PLAN OF SLAB A

L0-L4 shown, L50-L54 opposite hand

* Dimensions showing deck openings. For finger plate joint openings at Pier 10 and 13, see sheets S125 and S131 of S214. For strip seal joint opening, see sheet S118 of S214.

Notes:

See sheet S89 of S214 for cross section.

See sheet S83 and S114 of S214 for drainage scupper locations.

See sheet S92 thru S94 of S214 for superstructure details and Bill of Material.

Bars indicated thus 39 x 5-#5 etc. indicates 39 lines of bars with 5 lengths per line.

For Sections A-A, B-B and C-C, see sheet S89 of S214 .

MODEL: Default
FILE NAME: P:\4312-WBM-CLugageRehab\CADD\Structural_SN 090-0115_WBMainBridge_Final Plans\0900115-68E44-084-Sup-Truss-SlabA.dgn

MODJESKI and MASTERS	USER NAME =	DESIGNED - YJ	REVISED -	STATE OF ILLINOIS DEPARTMENT OF TRANSPORTATION	SUPERSTRUCTURE - TRUSS SPANS - SLAB A STRUCTURE NO. 090-0115	F.A.P. RTE.	SECTION	COUNTY	TOTAL SHEETS	SHEET NO.
		CHECKED - YSS	REVISED -			317	(15B-1)BP,BRR	PEO/TAZ	418	254
	PLOT SCALE =	DRAWN - AEC	REVISED -			CONTRACT NO. 68E44				
	PLOT DATE =	CHECKED - YJ	REVISED -		SHEET S84 OF S214 SHEETS	ILLINOIS	FED. AID PROJECT			

3/13/2025 12:48:20 PM

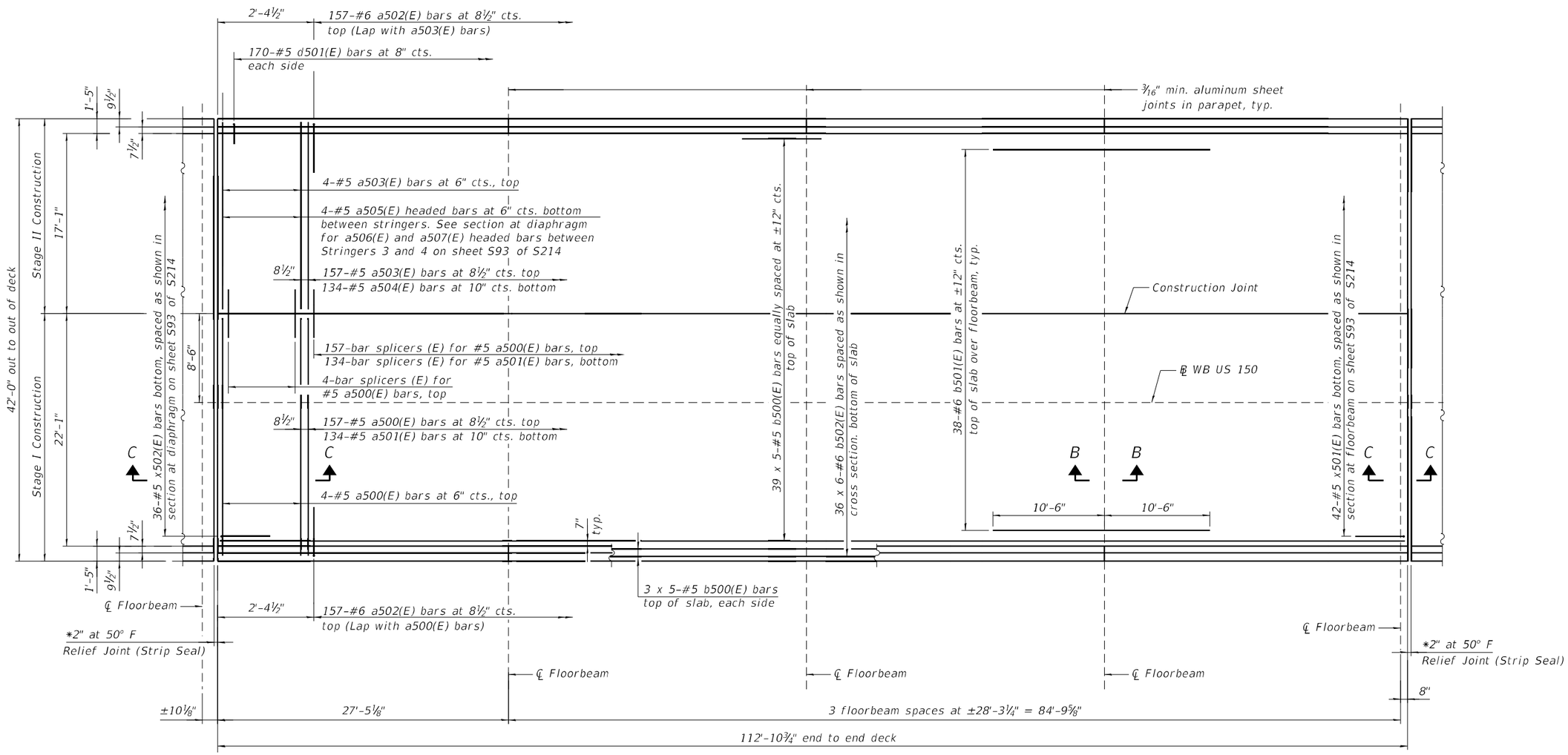

MINIMUM BAR LAP

#5 bar = 3'-6"

PLAN OF SLAB B

L4-L8 and L8-L12 shown, L42-L46 and L46-L50 opposite hand

* Dimensions showing deck openings. For strip seal joint openings, see sheet S118 of S214.

Notes:

See sheet S89 of S214 for cross section.

See sheet S83 and S114 of S214 for drainage scupper locations.

See sheet S92 thru S94 of S214 for superstructure details and Bill of Material.

Bars indicated thus 39 x 5-#5 etc. indicates 39 lines of bars with 5 lengths per line.

For Sections B-B and C-C, see sheet S89 of S214.

MODJESKI and MASTERS

USER NAME =	DESIGNED - YJ	REVISED -
	CHECKED - YSS	REVISED -
PLOT SCALE =	DRAWN - AEC	REVISED -
PLOT DATE =	CHECKED - YJ	REVISED -

STATE OF ILLINOIS
DEPARTMENT OF TRANSPORTATION

SUPERSTRUCTURE - TRUSS SPANS - SLAB B
STRUCTURE NO. 090-0115

SHEET S85 OF S214 SHEETS

F.A.P. RTE.	SECTION	COUNTY	TOTAL SHEETS	SHEET NO.
317	(15B-1)BP,BRR	PEO/TAZ	418	255

CONTRACT NO. 68E44

ILLINOIS FED. AID PROJECT

MODEL: Default
FILE NAME: P:\4312-WBMcCluggageRehab\CADD\Structural_SN 090-0115_WBMainBridge_Final Plans\0900115-68E44-085-Sup-Truss-SlabB.dgn

3/13/2025 12:48:22 PM

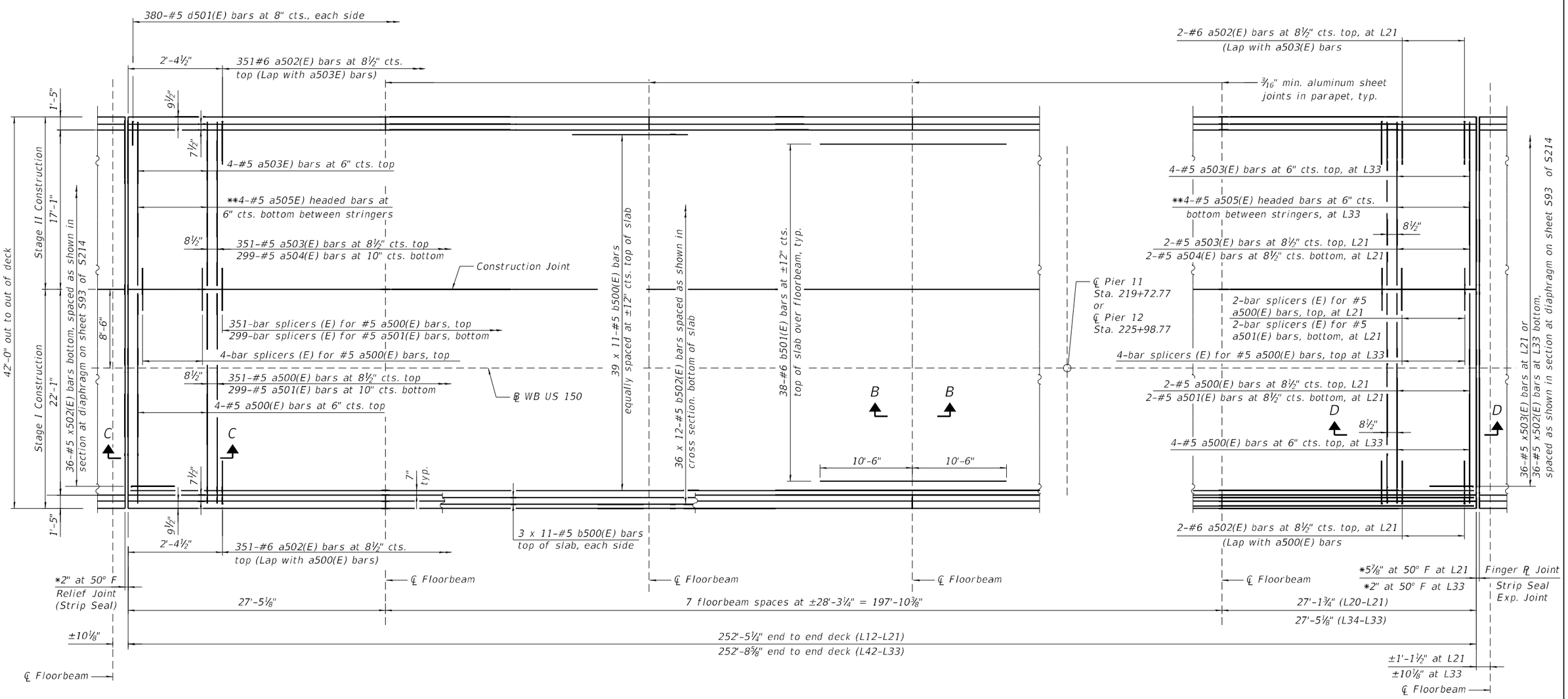

MINIMUM BAR LAP

#5 bar = 3'-6"

PLAN OF SLAB C

L12-L21 shown, L33-L42 opposite hand

* Dimensions showing deck openings. For strip seal joint opening, see sheet S118 of S214. For finger plate joint openings, see sheet S128 of S214.

** See section at diaphragm for a506(E) and a507(E) headed bars between Stringers 3 and 4 on sheet S93 of S214.

Notes:

See sheet S89 of S214 for cross section.

See sheet S83 and S114 of S214 for drainage scupper locations.

See sheet S92 thru S94 of S214 for superstructure details and Bill of Material.

Bars indicated thus 39 x 11-#5 etc. indicates 39 lines of bars with 11 lengths per line.

For Sections B-B and C-C, see sheet S92 of S214. For Section D-D, see sheet S93 of S214.

MODEL: Default
FILE NAME: P:\4312-VBMxCLegacyRehab\CADD\Structural_SN 090-0115_WBMainBridge_Final Plans\0900115-68E44-086-Sup-Truss-SlabC.dgn
3/13/2025 12:48:26 PM

MODJESKI and MASTERS

USER NAME =	DESIGNED - YJ	REVISED -	
	CHECKED - YSS	REVISED -	
PLOT SCALE =	DRAWN - AEC	REVISED -	
PLOT DATE =	CHECKED - YJ	REVISED -	

STATE OF ILLINOIS
DEPARTMENT OF TRANSPORTATION

SUPERSTRUCTURE - TRUSS SPANS - SLAB C
STRUCTURE NO. 090-0115

SHEET S86 OF S214 SHEETS

F.A.P. RTE.	SECTION	COUNTY	TOTAL SHEETS	SHEET NO.
317	(15B-1)BP,BRR	PEO/TAZ	418	256
		CONTRACT NO. 68E44		
		ILLINOIS FED. AID PROJECT		

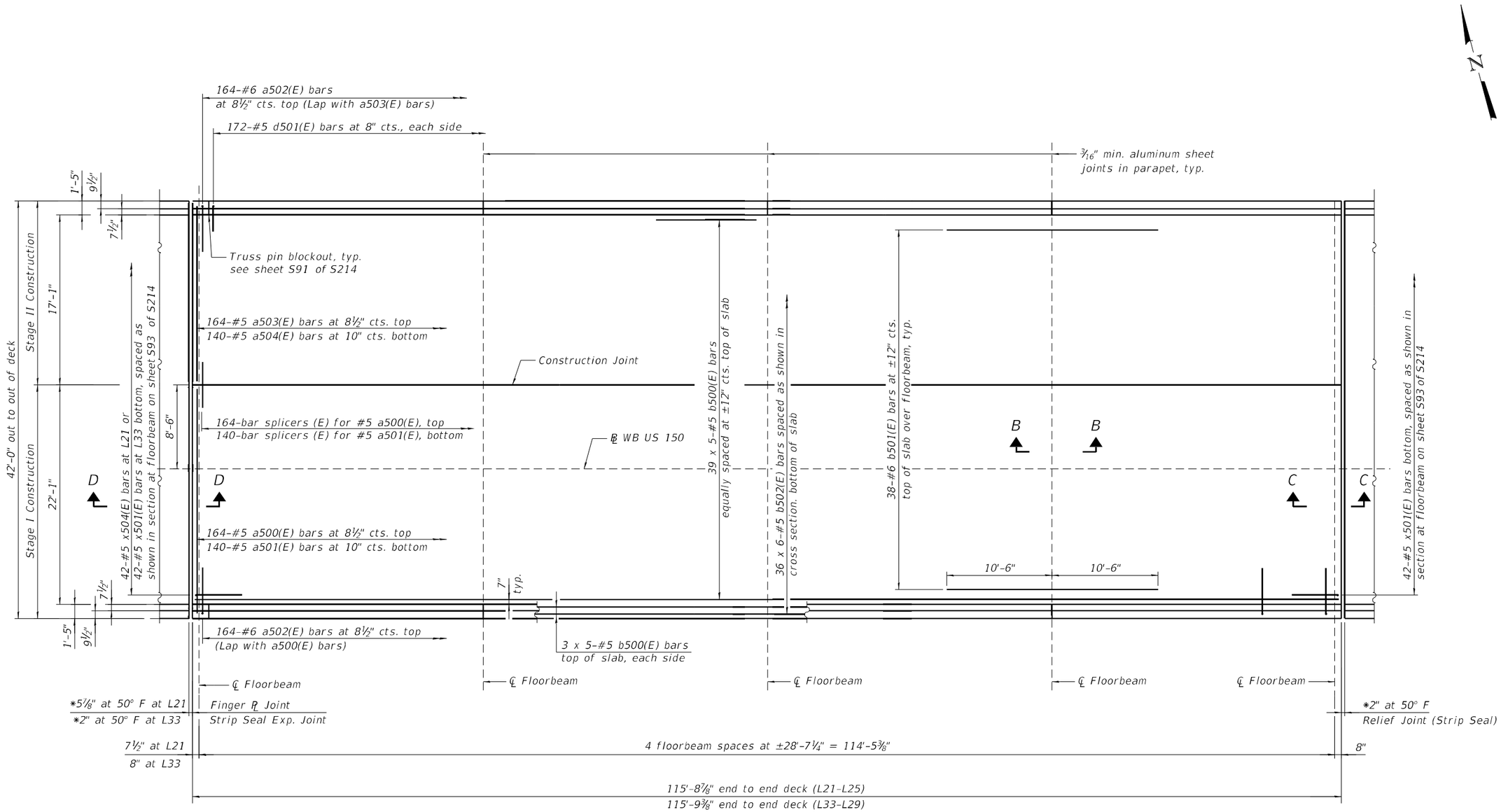

MINIMUM BAR LAP

#5 bar = 3'-6"

PLAN OF SLAB D

L21-L25 shown, L29-L33 opposite hand

* Dimensions showing deck openings. For finger plate joint opening, see sheets S128 of S214. For strip seal joint openings, see sheet S118 of S214.

Notes:

See sheet S89 of S214 for cross section.

See sheet S83 and S114 of S214 for drainage scupper locations.

See sheet S92 thru S94 of S214 for superstructure details and Bill of Material.

Bars indicated thus 39 x 5-#5 etc. indicates 39 lines of bars with 5 lengths per line.

For Sections B-B and C-C, see sheet S92 of S214. For Section D-D, see sheet S93 of S214.

MODEL: Default
FILE NAME: P:\4312-WBMcCluggageRehab\CADD\Structural_SN 090-0115_WBMainBridge_Final Plans\09000115-68E44-087-Sup-Truss-SlabD.dgn
3/13/2025 12:48:29 PM

MODJESKI and MASTERS

USER NAME =	DESIGNED - YJ	REVISED -	
	CHECKED - YSS	REVISED -	
PLOT SCALE =	DRAWN - AEC	REVISED -	
PLOT DATE =	CHECKED - YJ	REVISED -	

STATE OF ILLINOIS
DEPARTMENT OF TRANSPORTATION

SUPERSTRUCTURE - TRUSS SPANS - SLAB D
STRUCTURE NO. 090-0115

SHEET S87 OF S214 SHEETS

F.A.P. RTE.	SECTION	COUNTY	TOTAL SHEETS	SHEET NO.
317	(15B-1)BP,BRR	PEO/TAZ	418	257

CONTRACT NO. 68E44

ILLINOIS | FED. AID PROJECT

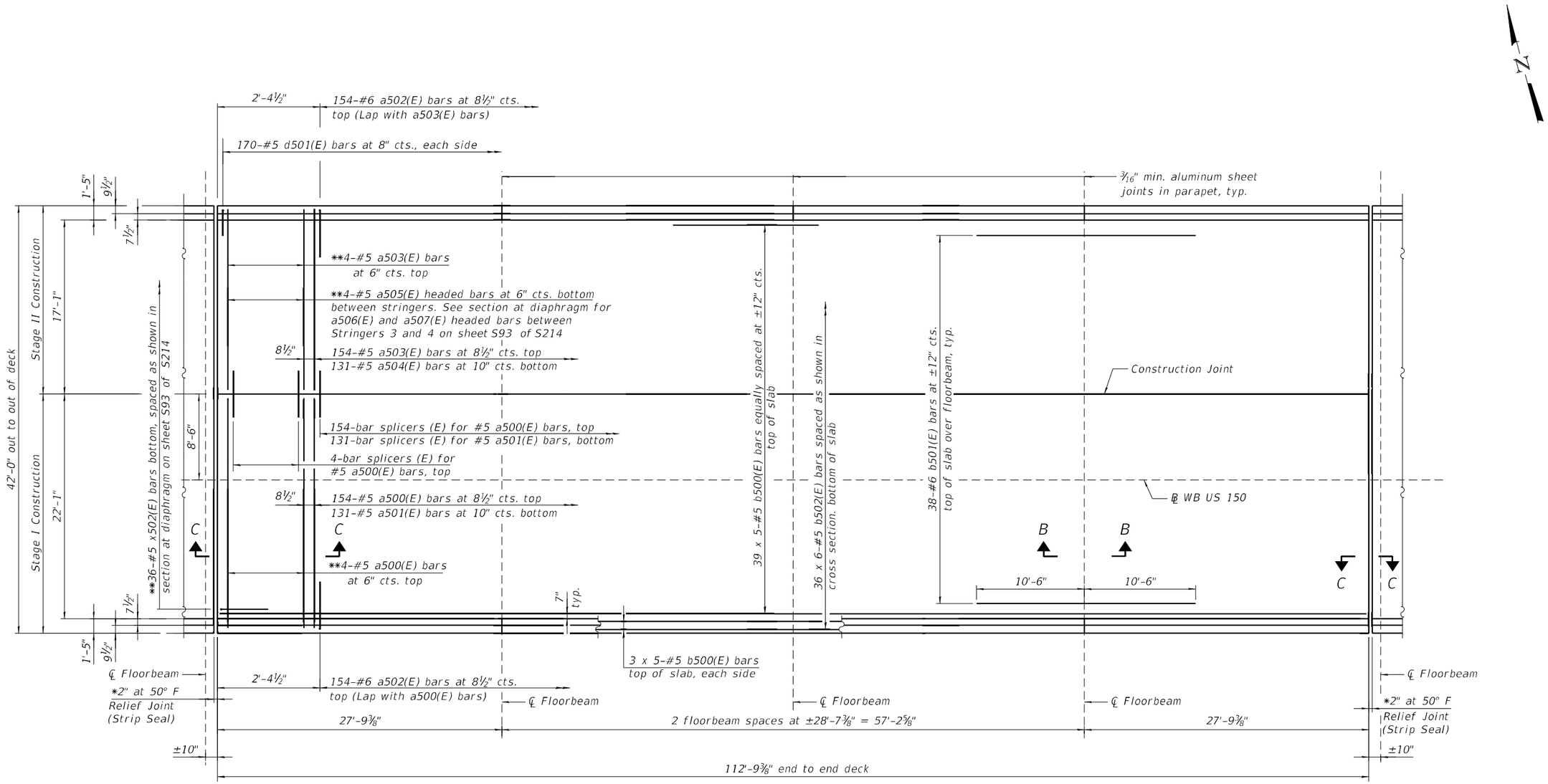

MINIMUM BAR LAP

#5 bar = 3'-6"

PLAN OF SLAB E

* Dimension showing deck opening. For strip seal joint openings see sheet S118 of S214.
** Provide at each end

Notes:
See sheet S89 of S214 for cross section.
See sheet S83 and S114 of S214 for drainage scupper locations.
See sheet S92 thru S94 of S214 for superstructure details and Bill of Material.
Bars indicated thus 39 x 5-#5 etc. indicates 39 lines of bars with 5 lengths per line.
For Sections B-B and C-C, see sheet S92 of S214.

MODEL: Default
FILE NAME: P:\4312-WBMcClugageRehab\CADD\Structural_SN 090-0115_WBMainBridge_Final Plans\0900115-68E44-088-Sup-Truss-SlabE.dgn
3/13/2025 12:48:32 PM

MODJESKI and MASTERS

USER NAME =	DESIGNED - YJ	REVISED -	
	CHECKED - YSS	REVISED -	
PLOT SCALE =	DRAWN - AEC	REVISED -	
PLOT DATE =	CHECKED - YJ	REVISED -	

STATE OF ILLINOIS
DEPARTMENT OF TRANSPORTATION

SUPERSTRUCTURE - TRUSS SPANS - SLAB E
STRUCTURE NO. 090-0115

SHEET S88 OF S214 SHEETS

F.A.P. RTE.	SECTION	COUNTY	TOTAL SHEETS	SHEET NO.
317	(15B-1)BP,BRR	PEO/TAZ	418	258
		CONTRACT NO. 68E44		
	ILLINOIS	FED. AID PROJECT		

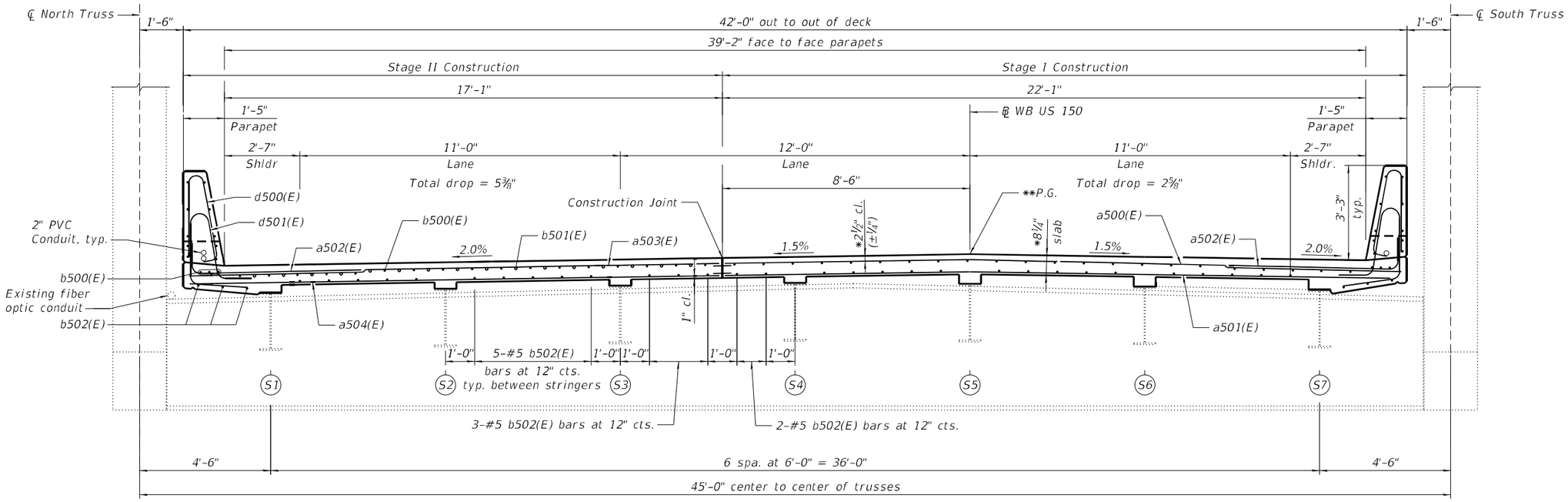

*Prior to grinding

**After grinding

OVER FLOORBEAMS

NEAR MIDSPAN OF STRINGERS

CROSS SECTION - SPANS 12 THRU 14

Looking East

Note:
See sheets S92 thru S94 of S214 for superstructure details and Bill of Material.

MODEL: Default
FILE NAME: P:\4312-VBM\CLugageRehab\CADD\Structural_SN 090-0115_WBMainBridge_Final Plans\0900115-68E44-089-Sup-Truss-CrossSection.dgn

3/13/2025 12:48:35 PM

MODJESKI and MASTERS

USER NAME =	DESIGNED - YJ	REVISED -	
	CHECKED - YSS	REVISED -	
PLOT SCALE =	DRAWN - AEC	REVISED -	
PLOT DATE =	CHECKED - YJ	REVISED -	

STATE OF ILLINOIS
DEPARTMENT OF TRANSPORTATION

SUPERSTRUCTURE - TRUSS SPANS - CROSS SECTION
STRUCTURE NO. 090-0115

SHEET S89 OF S214 SHEETS

F.A.P. RTE.	SECTION	COUNTY	TOTAL SHEETS	SHEET NO.
317	(15B-1)BP,BRR	PEO/TAZ	418	259
		CONTRACT NO. 68E44		
	ILLINOIS	FED. AID PROJECT		

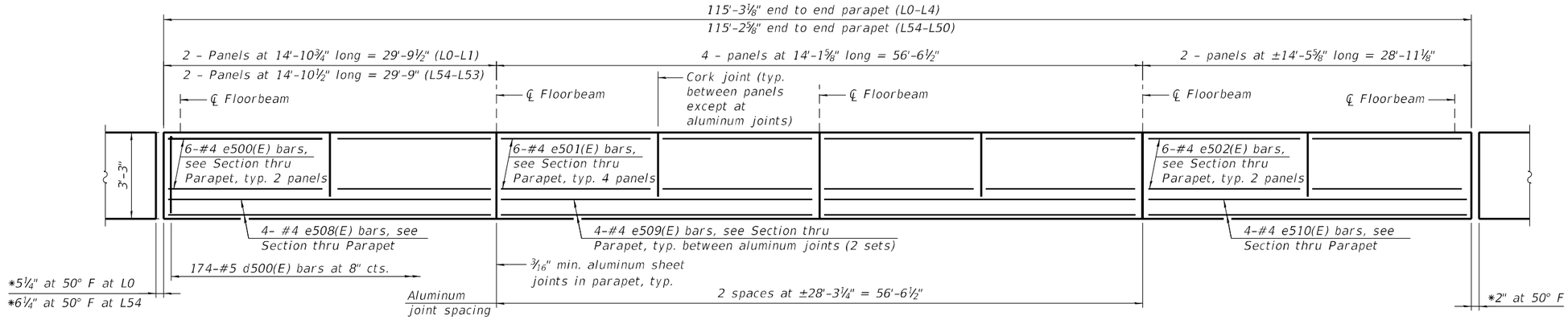

INSIDE ELEVATION OF PARAPET - SLAB A

North parapet shown (L0-L4), south parapet opposite hand
South parapet shown (L54-L50), north parapet opposite hand

* Parapet opening

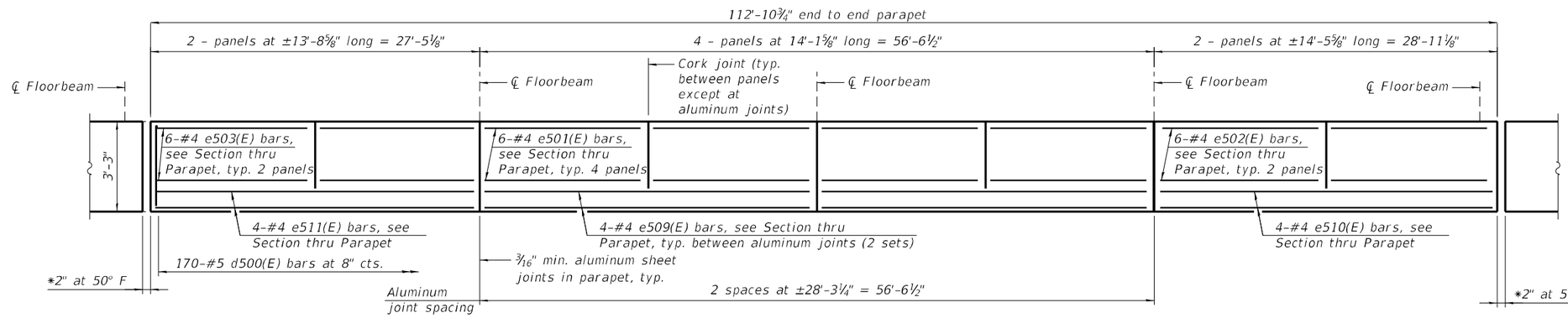

INSIDE ELEVATION OF PARAPET - SLAB B

North parapet shown (L4-L8, L8-L12), south parapet opposite hand
South parapet shown (L46-L42, L50-L46), north parapet opposite hand

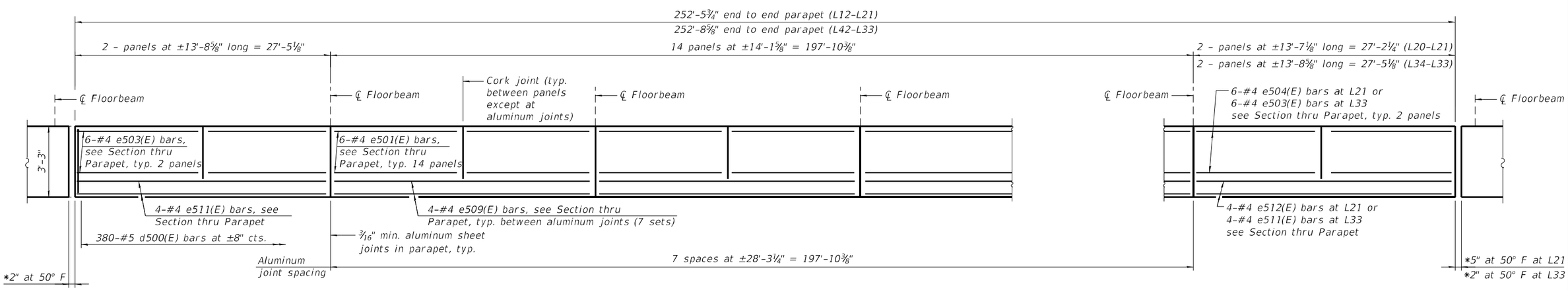

INSIDE ELEVATION OF PARAPET - SLAB C

North parapet shown (L12-L21), south parapet opposite hand
South parapet shown (L42-L33), north parapet opposite hand

Notes:
See sheet S94 of S214 for section thru parapet.
Work sheets S90 and S91 of S214 jointly.

MODEL: Default
FILE NAME: P:\4312-VBM\CE\LugageRehab\CADD\Structural_SN 090-0115_WBMainBridge_Final Plans\0900115-68E44-090-Sup-Truss-Parapet1.dgn

MODJESKI and MASTERS	USER NAME =	DESIGNED - YJ	REVISED -
		CHECKED - YSS	REVISED -
	PLOT SCALE =	DRAWN - AEC	REVISED -
	PLOT DATE =	CHECKED - YJ	REVISED -

STATE OF ILLINOIS
DEPARTMENT OF TRANSPORTATION

SUPERSTRUCTURE - TRUSS SPANS - PARAPET - 1
STRUCTURE NO. 090-0115

SHEET S90 OF S214 SHEETS

F.A.P. RTE.	SECTION	COUNTY	TOTAL SHEETS	SHEET NO.
317	(15B-1)BP,BRR	PEO/TAZ	418	260
		CONTRACT NO. 68E44		
		ILLINOIS	FED. AID PROJECT	

3/13/2025 12:48:38 PM

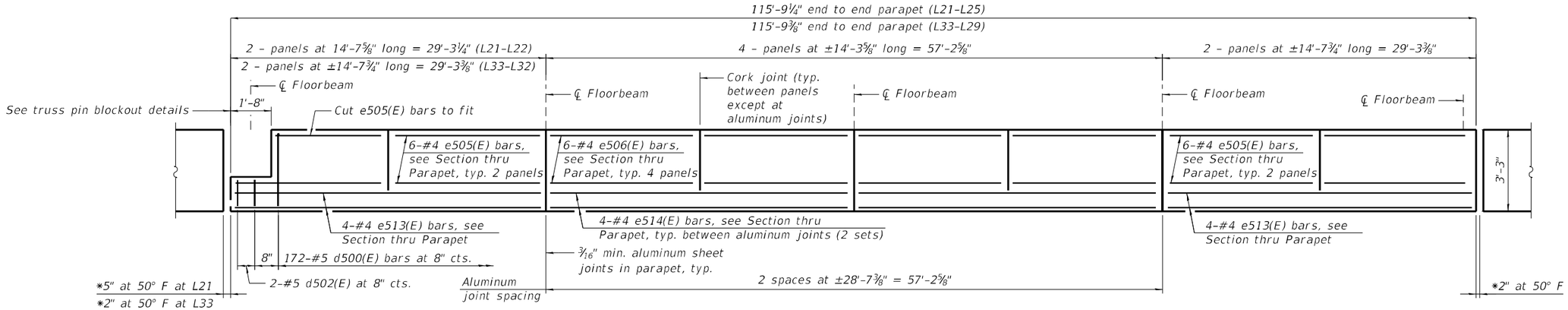

INSIDE ELEVATION OF PARAPET - SLAB D

North parapet shown (L21-L25), south parapet opposite hand
South parapet shown (L33-L29), north parapet opposite hand

* Parapet opening

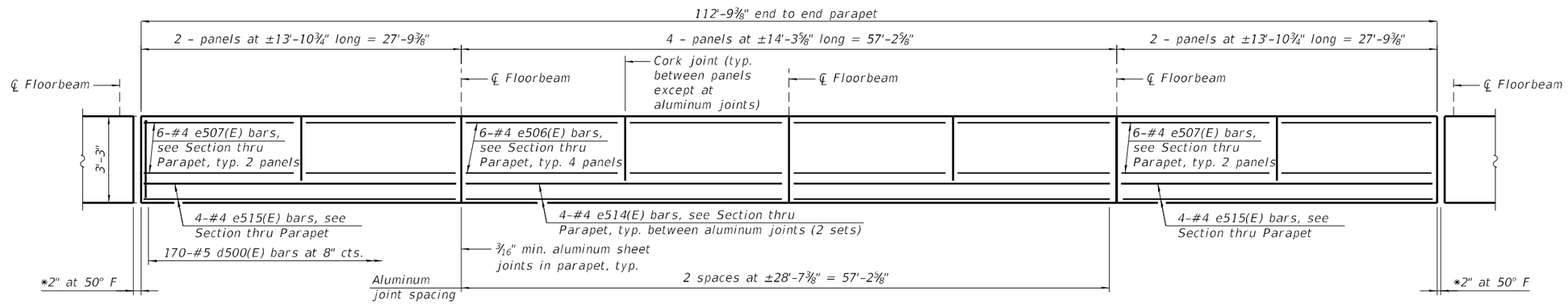

INSIDE ELEVATION OF PARAPET - SLAB E

North parapet shown, south parapet opposite hand

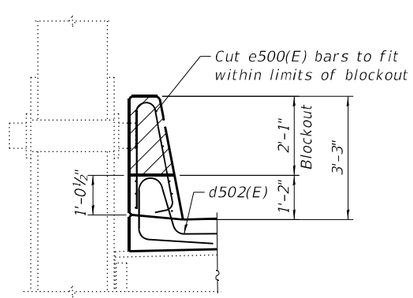

TRUSS PIN BLOCKOUT DETAILS

Slab reinforcement not shown for clarity.

Sliding steel plate at front face of parapet not shown for clarity. For details, see the parapet sliding PL details at L21 and L33 on sheets S128 and S118 of S214.

Notes:
See sheet S94 of S214 for section thru parapet.
Work sheets S90 and S91 of S214 jointly.

MODEL: Default
FILE NAME: P:\4312-WBM\CLigageRehab\CADD\Structural_SN 090-0115_WBMainBridge_Final Plans\09001115-68E44-091-Sup-Truss-Parapet2.dgn

MODJESKI and MASTERS	USER NAME =	DESIGNED - YJ	REVISED -
		CHECKED - YSS	REVISED -
	PLOT SCALE =	DRAWN - AEC	REVISED -
	PLOT DATE =	CHECKED - YJ	REVISED -

STATE OF ILLINOIS
DEPARTMENT OF TRANSPORTATION

SUPERSTRUCTURE - TRUSS SPANS - PARAPET - 2
STRUCTURE NO. 090-0115

SHEET S91 OF S214 SHEETS

F.A.P. RTE.	SECTION	COUNTY	TOTAL SHEETS	SHEET NO.
317	(15B-1)BP,BRR	PEO/TAZ	418	261
		CONTRACT NO. 68E44		
		ILLINOIS	FED. AID PROJECT	

3/13/2025 12:48:42 PM

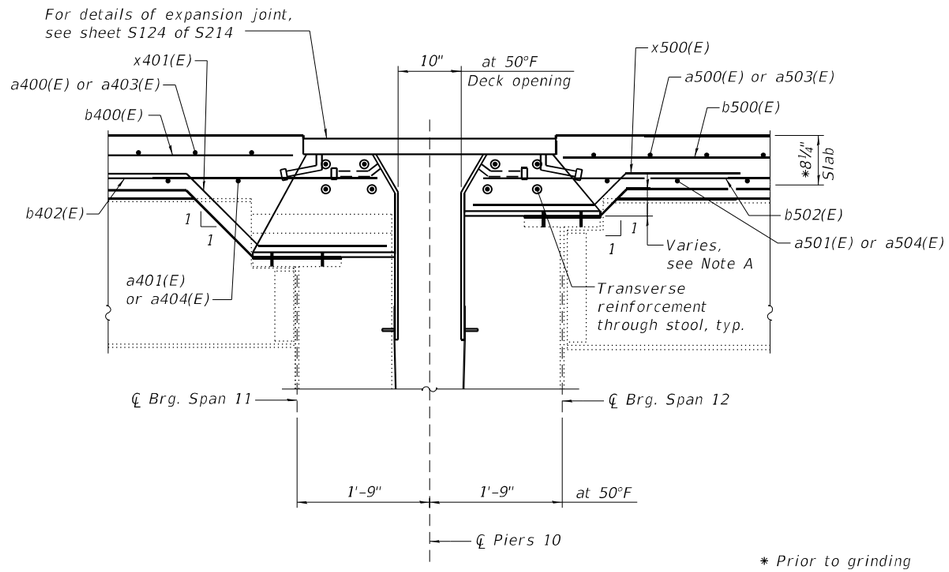

* Prior to grinding

SECTION A-A AT PIER 10

Finger ℞ Expansion Joint

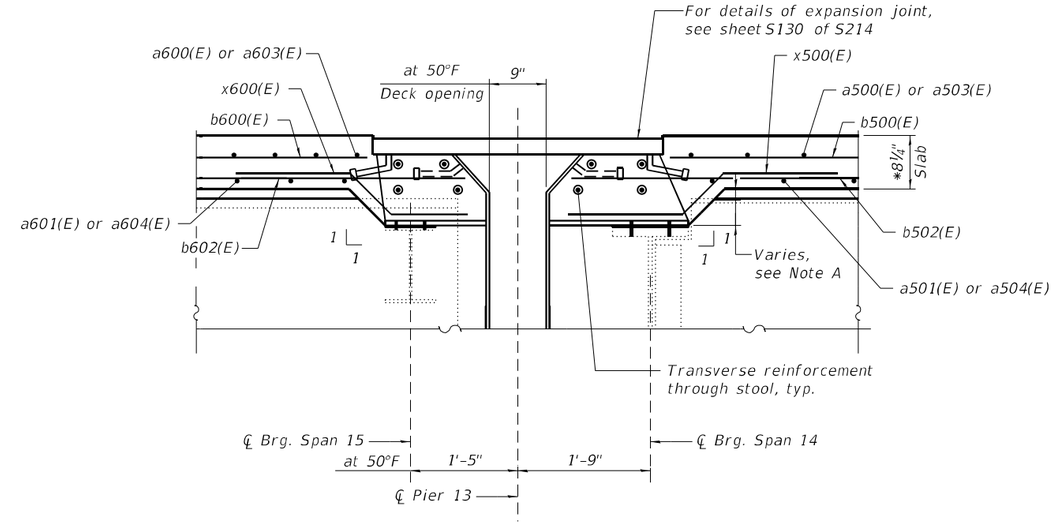

SECTION A-A AT PIER 13

Finger ℞ Expansion Joint

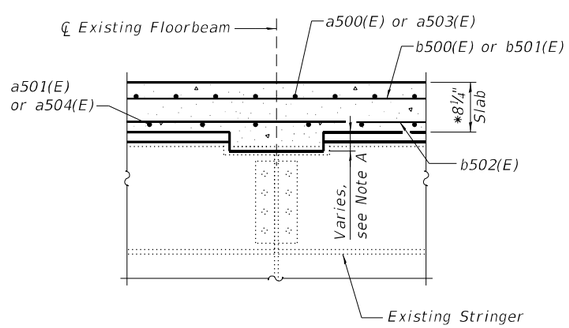

SECTION B-B

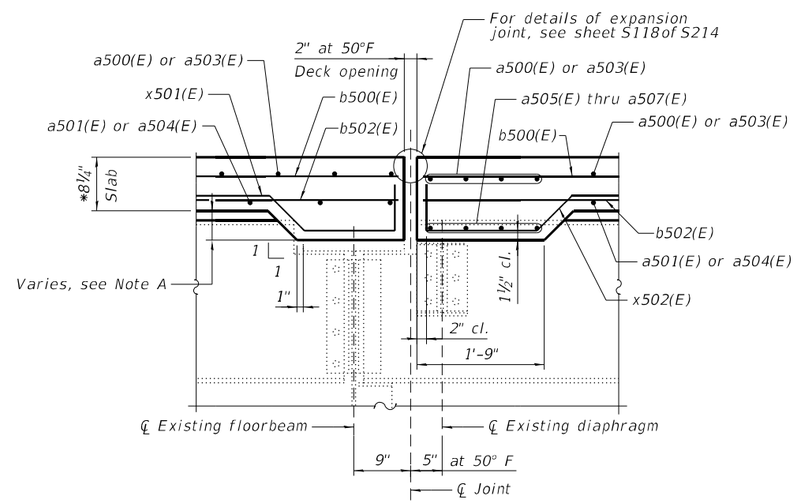

SECTION C-C

Relief Joint (Strip seal) at
L4, L8, L12, L25, L29, L42, L46 and L50

Note A:
Dimensions will be provided to the contractor in accordance with the Special Provision "Contractor Requirements for Dead Load Deflection and Top of Slab Elevation Data."

Note:
See sheets S84 thru S88 of S214 for section locations.

MODEL: Default
FILE NAME: P:\4312-VBM\CLugageRehab\CADD\Structural_SN 090-0115_WBMainBridge_Final Plans\0900115-68E44-092-Sup-Truss-Details1.dgn

MODJESKI and MASTERS	USER NAME =	DESIGNED - YJ	REVISED -	STATE OF ILLINOIS DEPARTMENT OF TRANSPORTATION	SUPERSTRUCTURE - TRUSS SPANS - DETAILS - 1 STRUCTURE NO. 090-0115	F.A.P. RTE.	SECTION	COUNTY	TOTAL SHEETS	SHEET NO.
		CHECKED - YSS	REVISED -			317	(15B-1)BP,BRR	PEO/TAZ	418	262
	PLOT SCALE =	DRAWN - AEC	REVISED -					CONTRACT NO. 68E44		
	PLOT DATE =	CHECKED - YJ	REVISED -		SHEET S92 OF S214 SHEETS		ILLINOIS	FED. AID PROJECT		

3/13/2025 12:48:45 PM

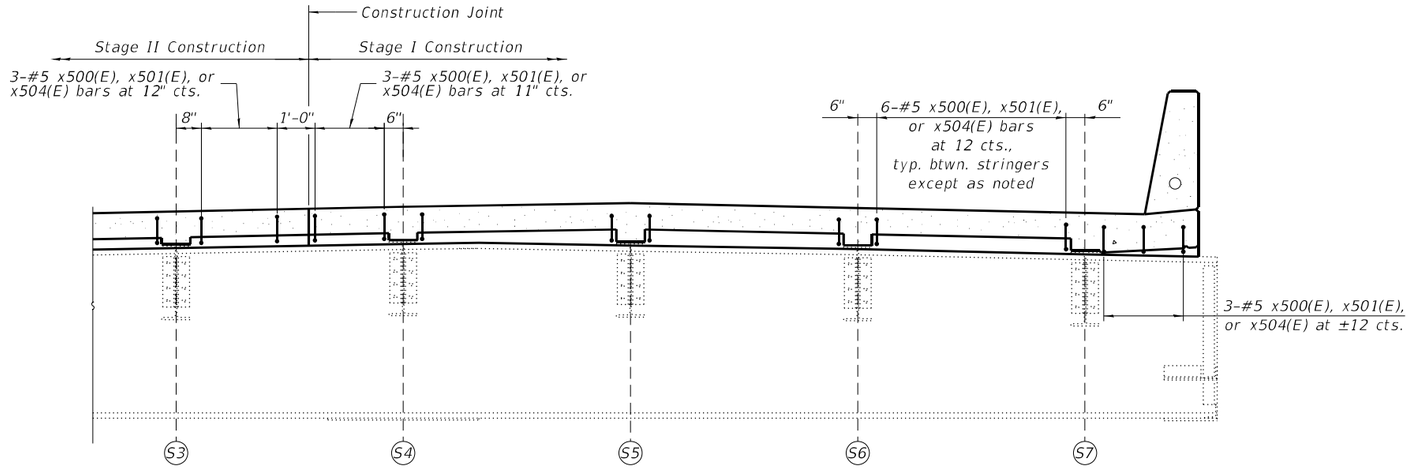

SECTION AT FLOORBEAM

Looking East

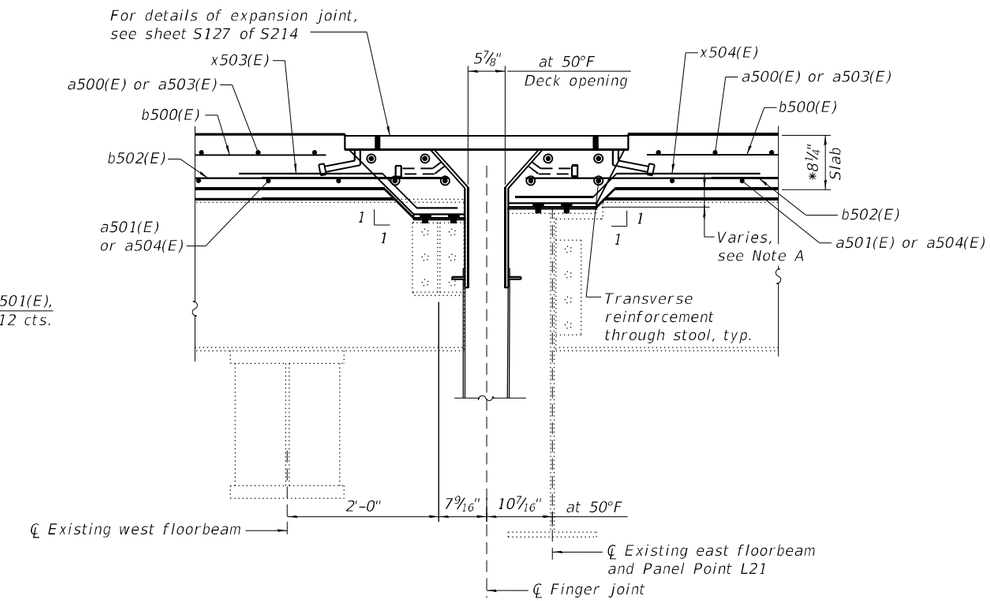

SECTION D-D AT L21

Finger ℄ Expansion Joint

* Prior to grinding
**At relief joint and strip seal expansion joint only.

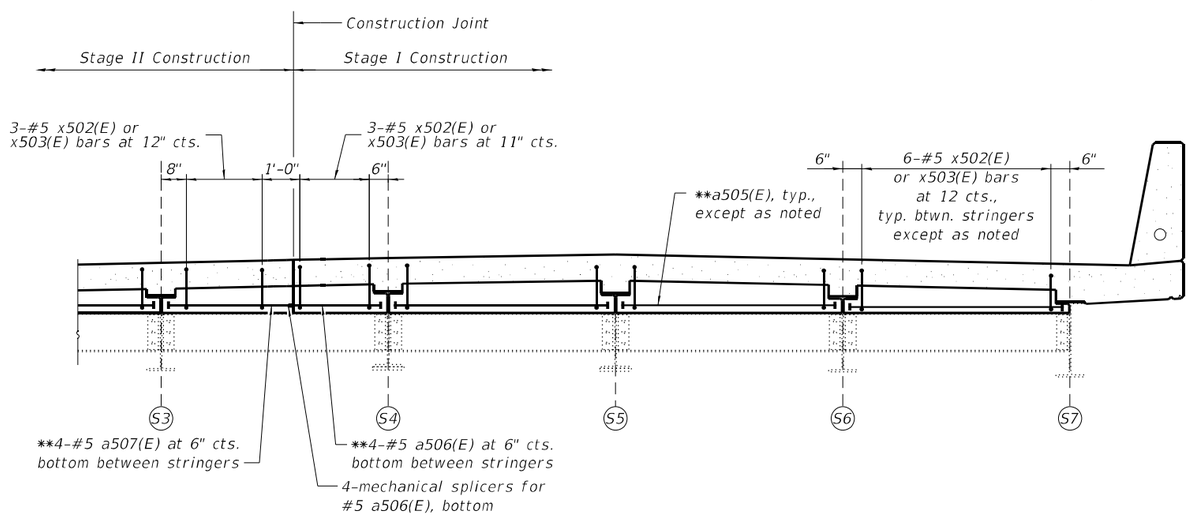

SECTION AT DIAPHRAGM

Looking East

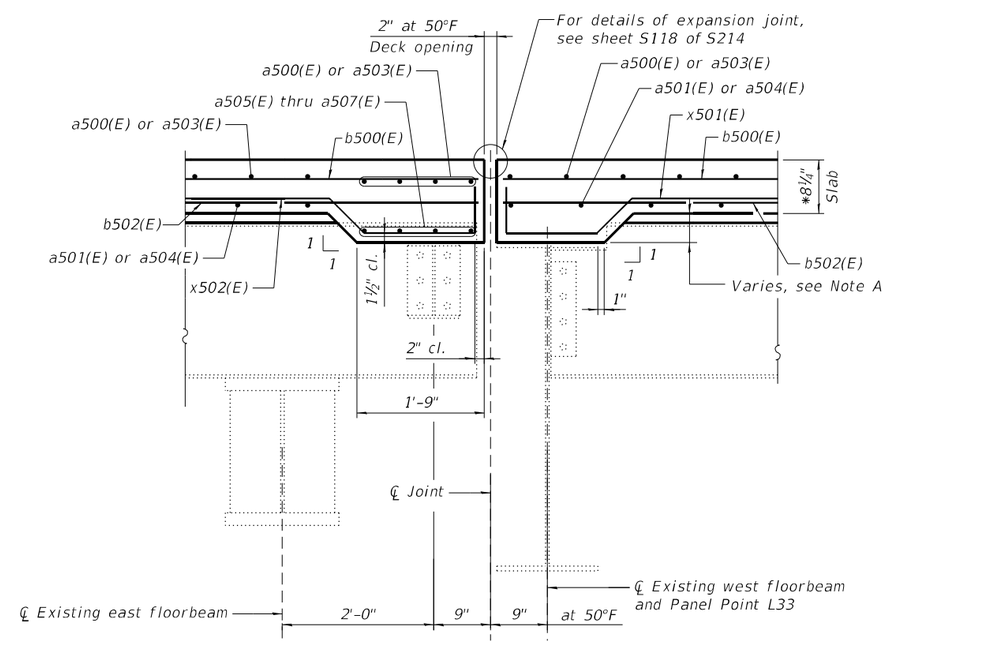

SECTION D-D AT L33

Strip seal expansion joint

Note A:
Dimensions will be provided to the contractor in accordance with the Special Provision "Contractor Requirements for Dead Load Deflection and Top of Slab Elevation Data."

Note:
See sheet S86 thru S87 of S214 for section locations.

MODEL: Default
FILE NAME: P:\4312-VBMcCLugageRehab\CADD\Structural_SN 090-0115_WBMainBridge_Final Plans\0900115-68E44-093-Sup-Truss-Details2.dgn

MODJESKI and MASTERS	USER NAME =	DESIGNED - YJ	REVISED -
		CHECKED - YSS	REVISED -
	PLOT SCALE =	DRAWN - AEC	REVISED -
	PLOT DATE =	CHECKED - YJ	REVISED -

STATE OF ILLINOIS
DEPARTMENT OF TRANSPORTATION

SUPERSTRUCTURE - TRUSS SPANS - DETAILS - 2
STRUCTURE NO. 090-0115

SHEET S93 OF S214 SHEETS

F.A.P. RTE.	SECTION	COUNTY	TOTAL SHEETS	SHEET NO.
317	(15B-1)BP,BRR	PEO/TAZ	418	263
		CONTRACT NO. 68E44		
		ILLINOIS	FED. AID PROJECT	

3/13/2025 12:48:48 PM

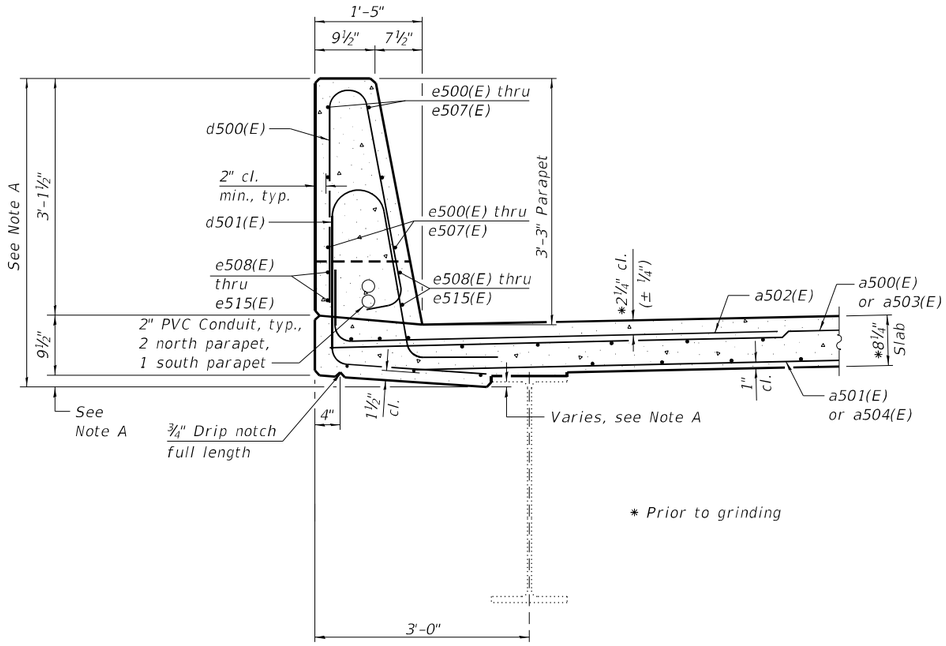

SECTION THRU PARAPET

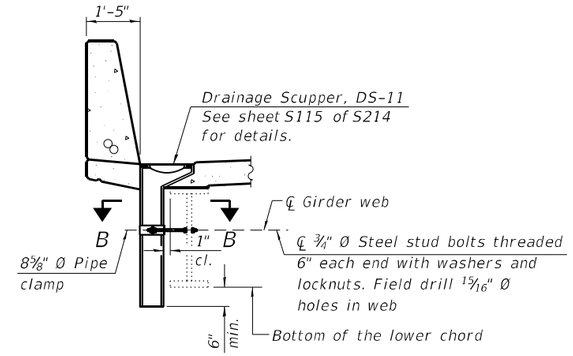

SECTION A-A

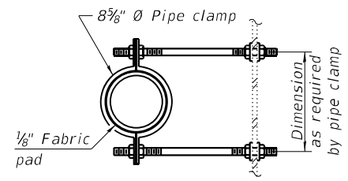

SECTION B-B

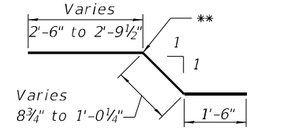

BAR x500(E)

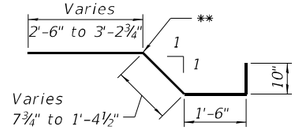

BAR x501(E)

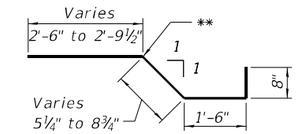

BAR x502(E)

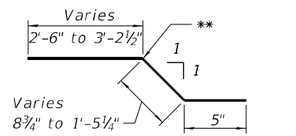

BAR x503(E)

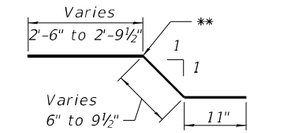

BAR x504(E)

SUPERSTRUCTURE BILL OF MATERIAL SPANS 12 THRU 14

Bar	No.	Size	Length	Shape
a500(E)	2176	#5	23'-3"	
a501(E)	1825	#5	23'-0"	
a502(E)	4276	#6	8'-4"	
a503(E)	2176	#5	18'-3"	
a504(E)	1825	#5	18'-0"	
a505(E)	180	#5	5'-9"	
a506(E)	36	#5	2'-4"	
a507(E)	36	#5	3'-4"	
a508(E)	464	#5	1'-6"	
b500(E)	3015	#5	25'-11"	
b501(E)	1634	#6	21'-0"	
b502(E)	2808	#5	24'-3"	
d500(E)	4604	#5	6'-5"	
d501(E)	4604	#5	8'-5"	
d502(E)	8	#5	6'-6"	
e500(E)	48	#4	14'-7"	
e501(E)	624	#4	13'-10"	
e502(E)	144	#4	14'-2"	
e503(E)	168	#4	13'-5"	
e504(E)	24	#4	13'-4"	
e505(E)	96	#4	14'-4"	
e506(E)	144	#4	14'-0"	
e507(E)	48	#4	13'-7"	
e508(E)	16	#4	29'-6"	
e509(E)	208	#4	28'-0"	
e510(E)	48	#4	28'-8"	
e511(E)	56	#4	27'-2"	
e512(E)	8	#4	26'-11"	
e513(E)	32	#4	29'-0"	
e514(E)	48	#4	28'-4"	
e515(E)	16	#4	27'-6"	
x500(E)	84	#5	5'-1"	
x501(E)	378	#5	6'-3"	
x502(E)	324	#5	5'-5"	
x503(E)	36	#5	4'-5"	
x504(E)	42	#5	4'-3"	
Concrete Superstructure			Cu. Yd.	2,480.4
Protective Coat			Sq. Yd.	8,061
Reinforcement Bars, Epoxy Coated			Pound	528,330

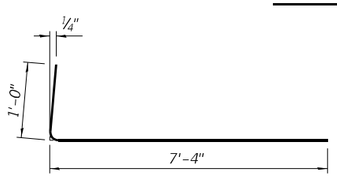

BAR a502(E)

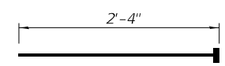

BAR a506(E)

(Headed. 36-#5 bar terminators)

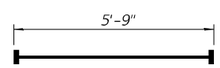

BAR a505(E)

(Headed. 360-#5 bar terminators)

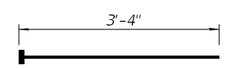

BAR a507(E)

(Headed. 36-#5 bar terminators)

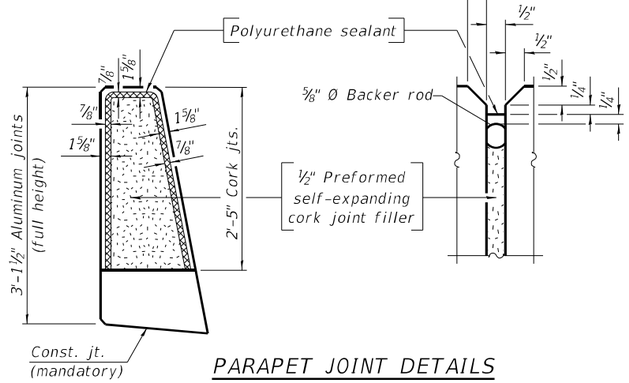

PARAPET JOINT DETAILS

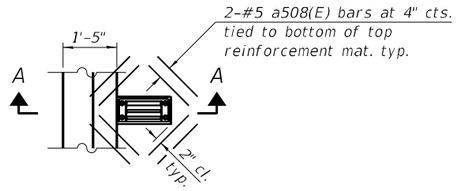

DRAINAGE SCUPPER REINFORCEMENT

58 locations required

Note:
Cut longitudinal reinforcement to clear drainage scuppers.

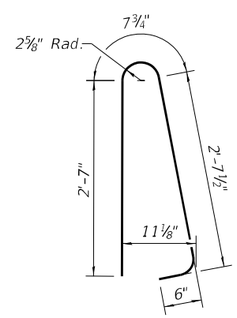

BAR d500(E)

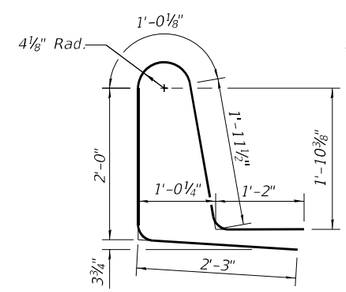

BAR d501(E)

**Contractor shall bend this location to fit in field.

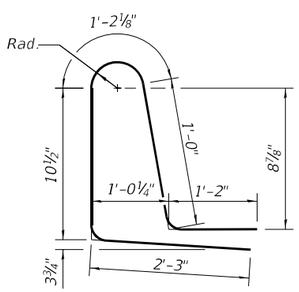

BAR d502(E)

Note A:
Dimensions will be provided to the contractor in accordance with the Special Provision "Contractor Requirements for Dead Load Deflection and Top of Slab Elevation Data."

Notes:
The clamping device shall be galvanized according to AASHTO M 232. Cost of clamping device included with Drainage Scupper.
The 3/16" min. aluminum sheet shall be ASTM B 209 alloy 3003-H14 and coated to minimize reaction with wet concrete. Cost included with Concrete Superstructure.
The Polyurethane Sealant shall be according to Article 1050.04 of the Std. Spec. and the color shall be gray.
Bar terminators, paid for separately. See Total Bill of Material.
For bar splicer and mechanical splicer details, see sheet S214 of S214.

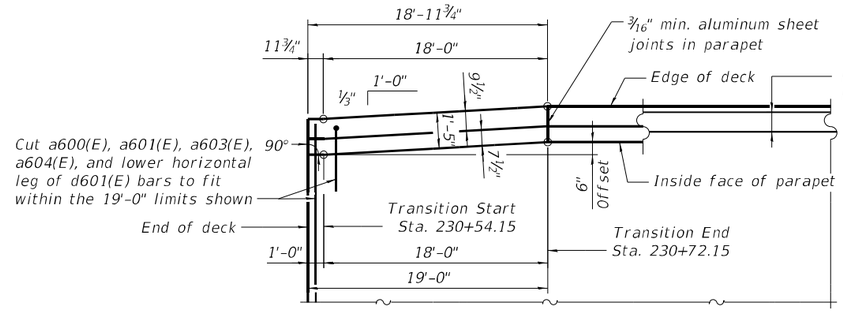

SHOULDER WIDTH TRANSITION DETAIL

North parapet details shown, south parapet similar

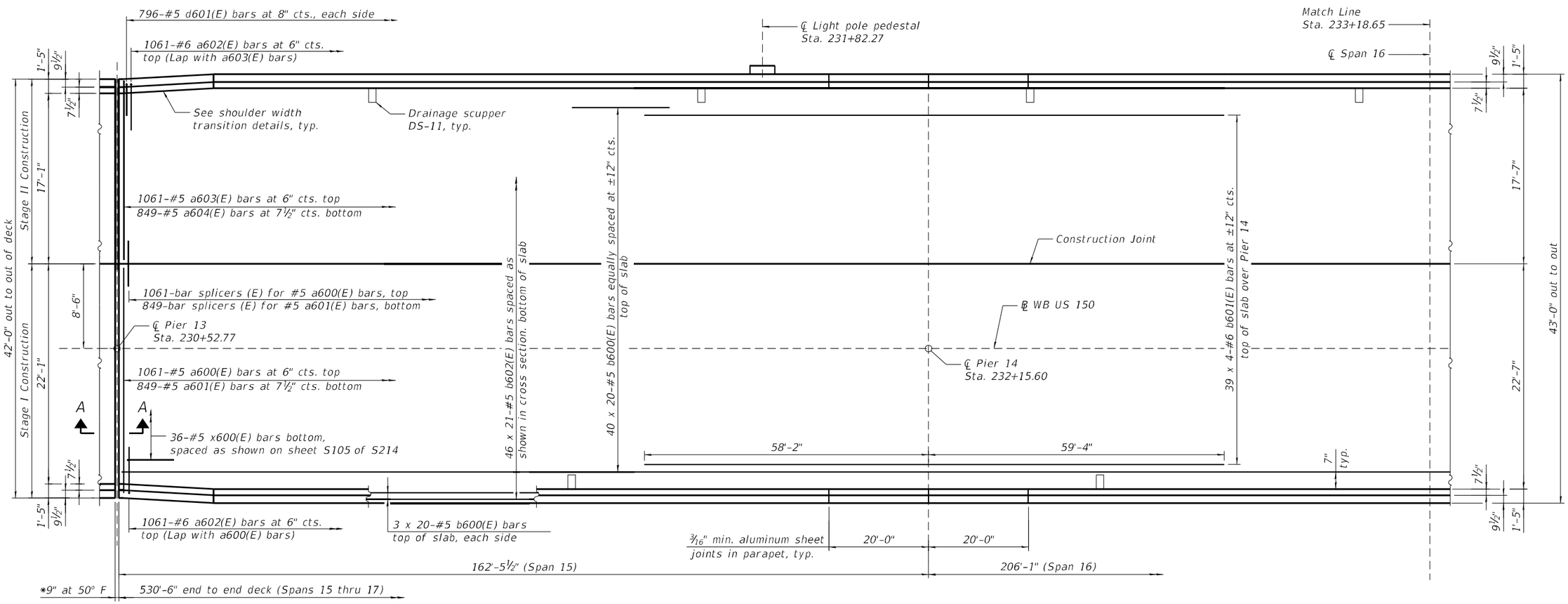

MINIMUM BAR LAP

#5 bar = 3'-6"
#6 bar = 3'-7"

* Dimension showing deck opening. For finger plate joint opening see sheet S131 of S214

PARTIAL PLAN

Span 15 and Partial Span 16

Notes:

See sheet S101 of S214 for cross section.

See sheet S114 of S214 for drainage scupper stations.

See sheet S105 thru S107 of S214 for superstructure details and Bill of Material.

Bars indicated thus 40 x 20-#5 etc. indicates 40 lines of bars with 20 lengths per line.

For Section A-A, see sheet S105 of S214.

MODEL: Default
FILE NAME: P:\4312-WBM\CLingageRehab\CADD\Structural_SN 090-0115_WBMainBridge_Final Plans\0900115-68E44-095-Sup-EastApp-Spans 15-16.dgn
3/13/2025 12:48:54 PM

MODJESKI and MASTERS

USER NAME =	DESIGNED - YJ	REVISED -	
	CHECKED - UB	REVISED -	
PLOT SCALE =	DRAWN - AEC	REVISED -	
PLOT DATE =	CHECKED - YJ	REVISED -	

STATE OF ILLINOIS
DEPARTMENT OF TRANSPORTATION

SUPERSTRUCTURE - EAST APPROACH - SLAB PLAN - 1
STRUCTURE NO. 090-0115

SHEET S95 OF S214 SHEETS

F.A.P. RTE.	SECTION	COUNTY	TOTAL SHEETS	SHEET NO.
317	(15B-1)BP,BRR	PEO/TAZ	418	265
		CONTRACT NO. 68E44		
	ILLINOIS	FED. AID PROJECT		

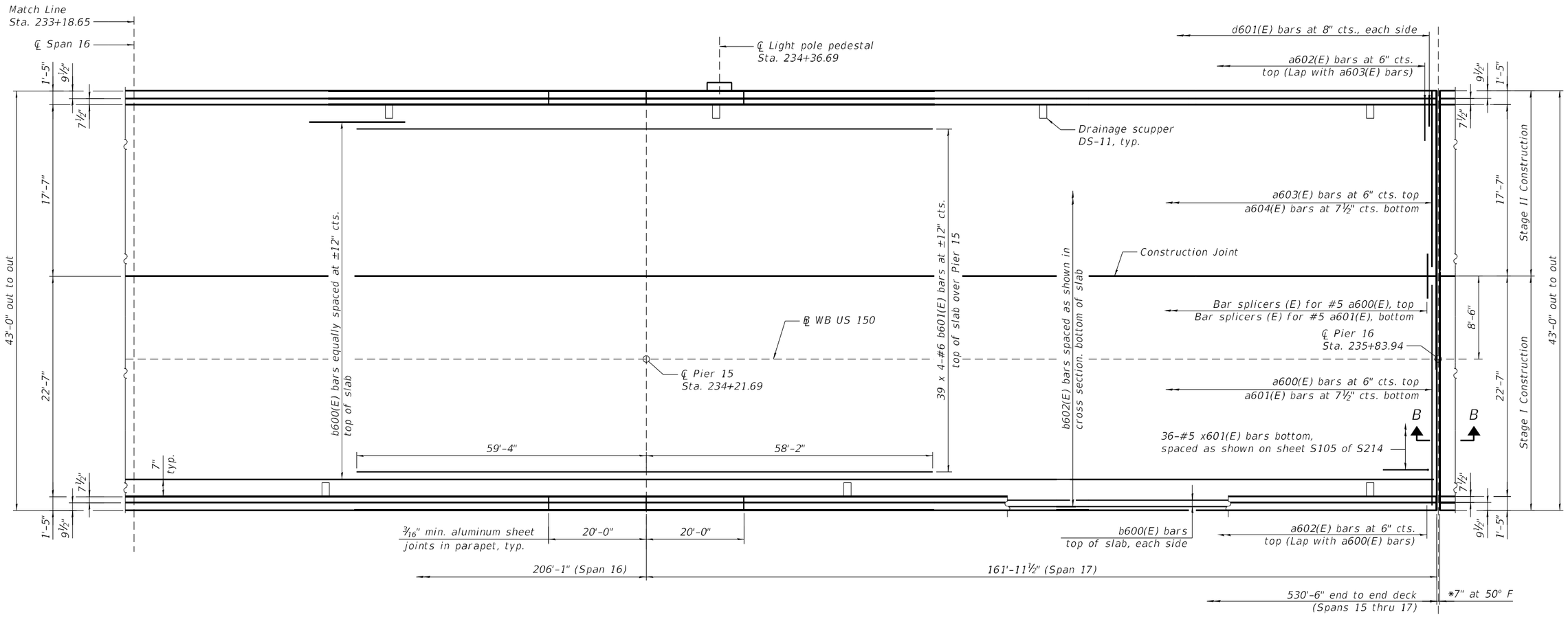

* Dimension showing deck opening. For finger plate joint opening, see sheet S134 of S214

PARTIAL PLAN

Partial Span 16 and Span 17

MINIMUM BAR LAP

#5 bar = 3'-6"
#6 bar = 3'-7"

Notes:

See sheet S101 of S214 for cross section.

See sheet S114 of S214 for drainage scupper stations.

See sheet S105 thru S107 of S214 for superstructure details and Bill of Material.

Bars indicated thus 39 x 4-#6 etc. indicates 39 lines of bars with 4 lengths per line.

For Section B-B, see sheet S105 of S214.

MODEL: Default
FILE NAME: P:\4312-VBM\CLugageRehab\CADD\Structural_SN 090-0115_WBMainBridge_Final Plans\0900115-68E44-096-Sup-EastAppr-Spans 16-17.dgn
3/13/2025 12:48:58 PM

MODJESKI and MASTERS

USER NAME =	DESIGNED - YJ	REVISED -	
	CHECKED - UB	REVISED -	
PLOT SCALE =	DRAWN - AEC	REVISED -	
PLOT DATE =	CHECKED - YJ	REVISED -	

STATE OF ILLINOIS
DEPARTMENT OF TRANSPORTATION

SUPERSTRUCTURE - EAST APPROACH - SLAB PLAN - 2
STRUCTURE NO. 090-0115

SHEET S96 OF S214 SHEETS

F.A.P. RTE.	SECTION	COUNTY	TOTAL SHEETS	SHEET NO.
317	(15B-1)BP,BRR	PEO/TAZ	418	266
		CONTRACT NO. 68E44		
		ILLINOIS FED. AID PROJECT		

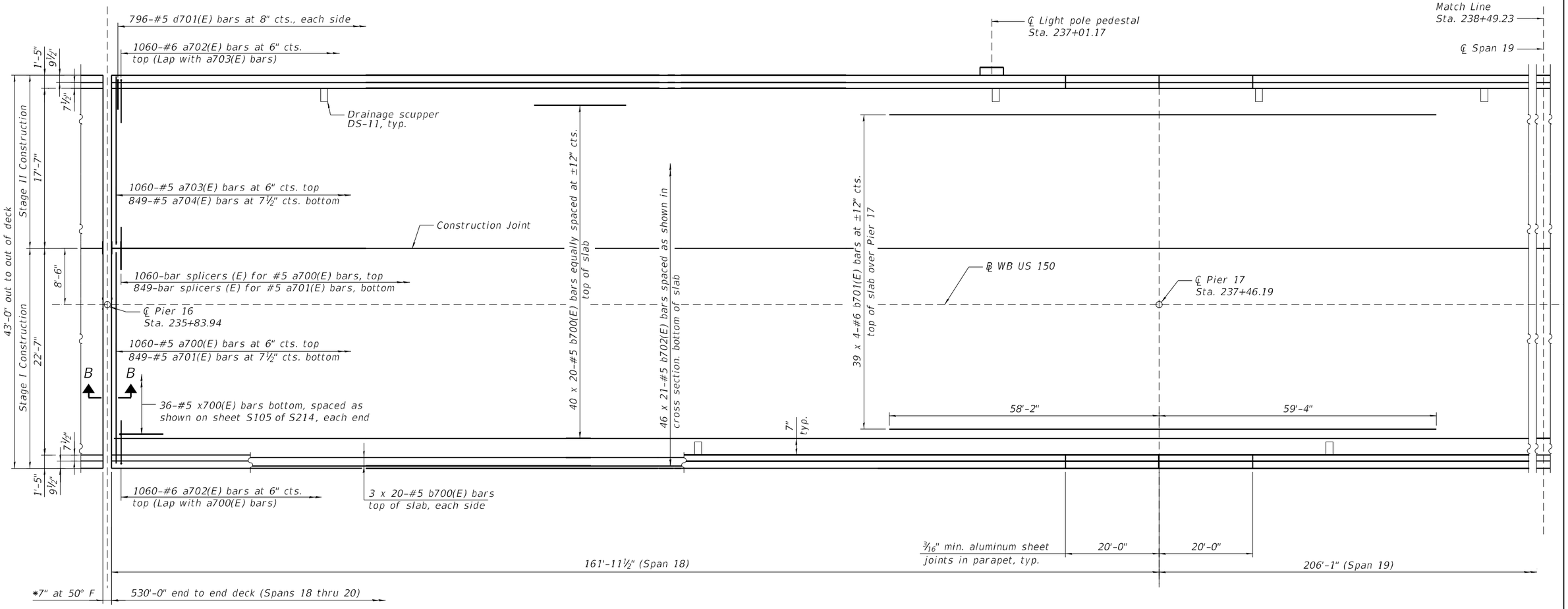

PARTIAL PLAN

Span 18 and Partial Span 19

* Dimension showing deck opening. For finger plate joint opening, see sheet S134 of S214

MINIMUM BAR LAP

#5 bar = 3'-6"
#6 bar = 3'-7"

Notes:

See sheet S101 of S214 for cross section.

See sheet S114 of S214 for drainage scupper stations.

See sheet S105 thru S107 of S214 for superstructure details and Bill of Material.

Bars indicated thus 40 x 20-#5 etc. indicates 40 lines of bars with 20 lengths per line.

For Section B-B, see sheet S105 of S214.

MODEL: Default
FILE NAME: P:\4312-VBMcCLugageRehab\CADD\Structural_SN 090-0115_WBMainBridge_Final Plans\0900115-68E44-097-Sup-EastAppr-Spans 18-19.dgn

MODJESKI and MASTERS	USER NAME =	DESIGNED - YJ	REVISED -
		CHECKED - UB	REVISED -
	PLOT SCALE =	DRAWN - AEC	REVISED -
	PLOT DATE =	CHECKED - YJ	REVISED -

STATE OF ILLINOIS
DEPARTMENT OF TRANSPORTATION

SUPERSTRUCTURE - EAST APPROACH - SLAB PLAN - 3
STRUCTURE NO. 090-0115

SHEET S97 OF S214 SHEETS

F.A.P. RTE.	SECTION	COUNTY	TOTAL SHEETS	SHEET NO.
317	(15B-1)BP,BRR	PEO/TAZ	418	267
		CONTRACT NO. 68E44		
		ILLINOIS FED. AID PROJECT		

3/13/2025 12:49:00 PM

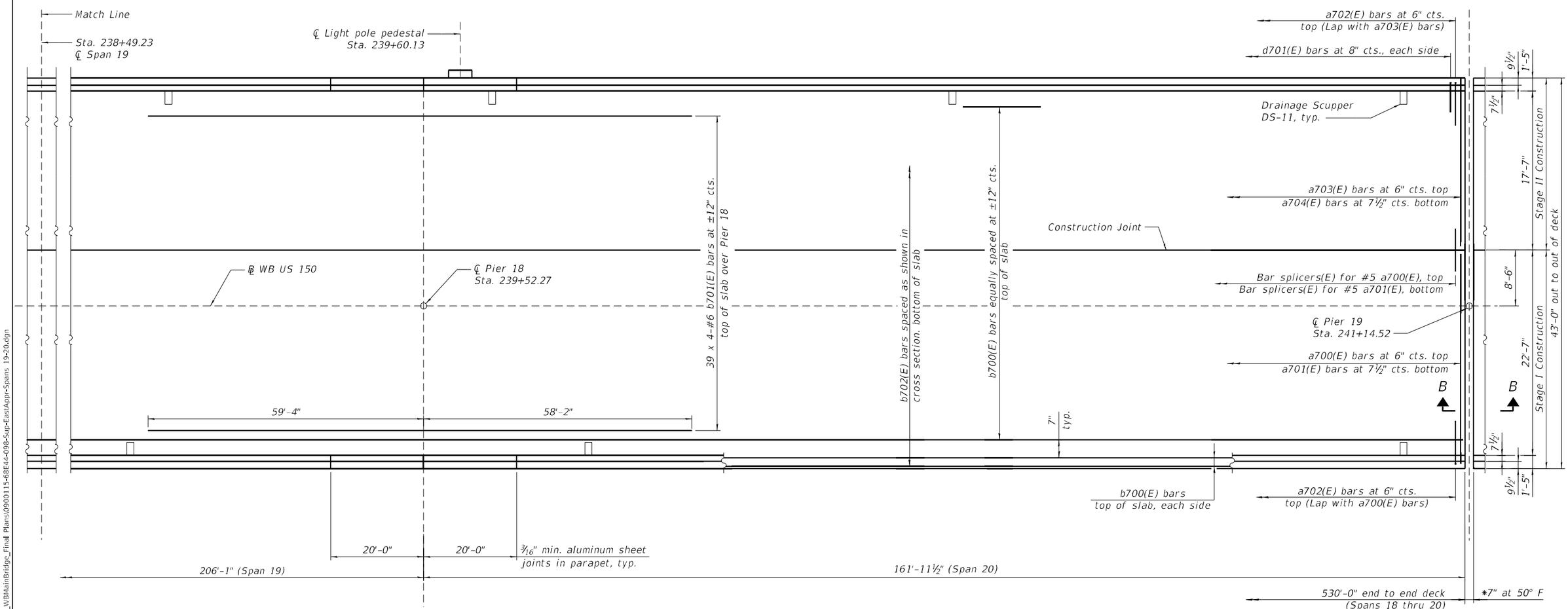

PARTIAL PLAN

Partial Span 19 and Span 20

* Dimension showing deck opening. For finger plate joint opening, see sheet S134 of S214

MINIMUM BAR LAP

#5 bar = 3'-6"
#6 bar = 3'-7"

Notes:
See sheet S101of S214 for cross section.
See sheet S114 of S214 for drainage scupper stations.
See sheet S105 thru S107 of S214 for superstructure details and Bill of Material.
Bars indicated thus 39 x 4-#6 etc. indicates 39 lines of bars with 4 lengths per line.
For Section B-B, see sheet S105 of S214.

MODEL: Default
FILE NAME: P:\4312-WBMcClugageRehab\CADD\Structural_SN 090-0115_WBMainBridge_Final Plans\0900115-68E44-098-SupEastApprSpans 19-20.dgn
3/13/2025 12:49:02 PM

MODJESKI and MASTERS

USER NAME =	DESIGNED - YJ	REVISED -	
	CHECKED - UB	REVISED -	
PLOT SCALE =	DRAWN - AEC	REVISED -	
PLOT DATE =	CHECKED - YJ	REVISED -	

STATE OF ILLINOIS
DEPARTMENT OF TRANSPORTATION

SUPERSTRUCTURE - EAST APROACH - SLAB PLAN - 4
STRUCTURE NO. 090-0115

SHEET S98 OF S214 SHEETS

F.A.P. RTE.	SECTION	COUNTY	TOTAL SHEETS	SHEET NO.
317	(15B-1)BP,BRR	PEO/TAZ	418	268
		CONTRACT NO. 68E44		
		ILLINOIS	FED. AID PROJECT	

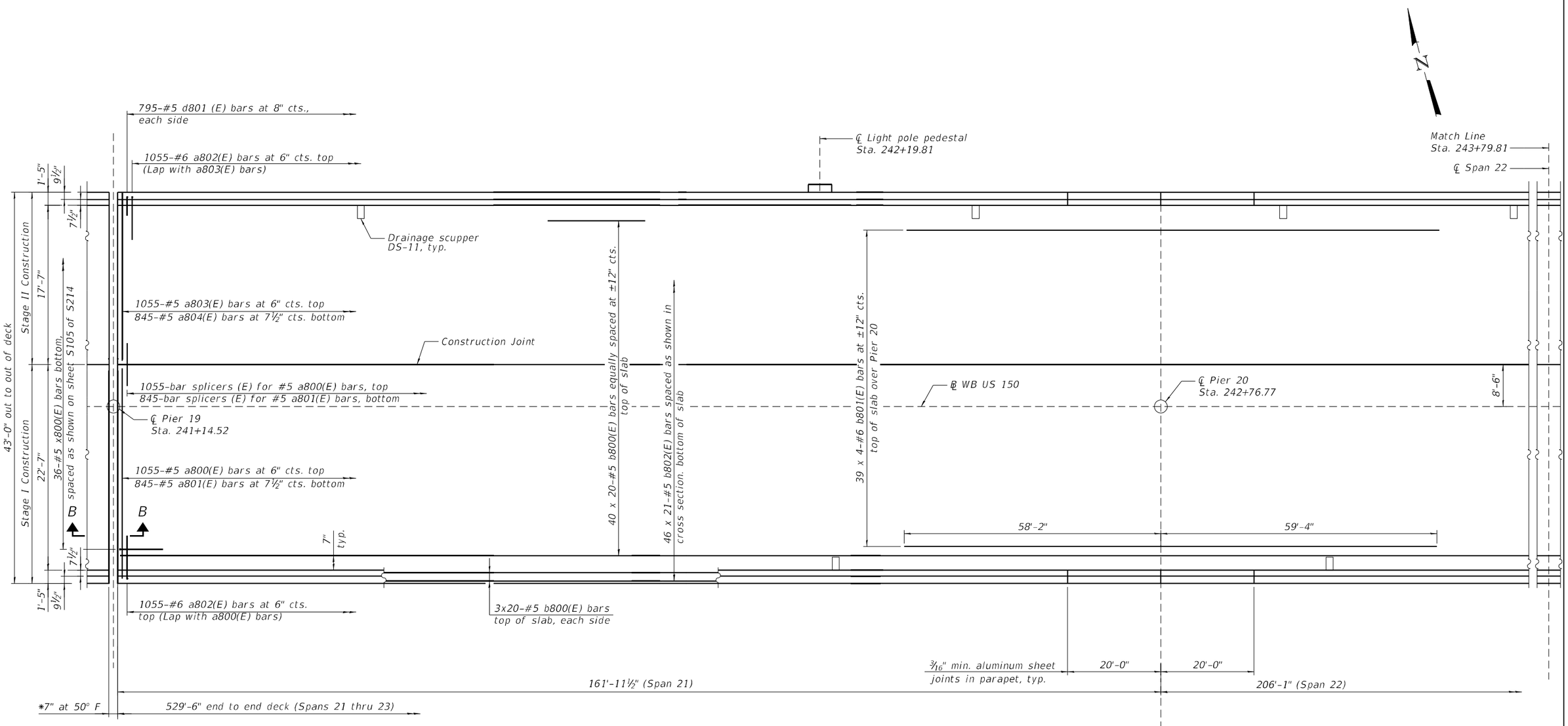

MINIMUM BAR LAP

#5 bar = 3'-6"
#6 bar = 3-7"

* Dimension showing deck opening. For finger plate joint opening, see sheet S134 of S214.

PARTIAL PLAN

Spans 21 and Partial Span 22

Notes:

See sheet S101of S214 for cross section.

See sheet S114 of S214 for drainage scupper stations.

See sheet S105 thru S107 of S214 for superstructure details and Bill of Material.

Bars indicated thus 40 x 20-#5 etc. indicates 40 lines of bars with 20 lengths per line.

For Section B-B, see sheet S105 of S214.

MODEL: Default
FILE NAME: P:\4312-VBMcCLugageRehab\CADD\Structural_SN 090-0115_WBMainBridge_Final Plans\0900115-68E44-099-Sup-EastAppr-Spans 21-22.dgn

MODJESKI and MASTERS	USER NAME =	DESIGNED - YJ	REVISED -
		CHECKED - UB	REVISED -
	PLOT SCALE =	DRAWN - AEC	REVISED -
	PLOT DATE =	CHECKED - YJ	REVISED -

STATE OF ILLINOIS
DEPARTMENT OF TRANSPORTATION

SUPERSTRUCTURE - EAST APROACH - SLAB PLAN - 5
STRUCTURE NO. 090-0115

SHEET S99 OF S214 SHEETS

F.A.P. RTE.	SECTION	COUNTY	TOTAL SHEETS	SHEET NO.
317	(15B-1)BP,BRR	PEO/TAZ	418	269
		CONTRACT NO. 68E44		
		ILLINOIS	FED. AID PROJECT	

3/13/2025 12:49:06 PM

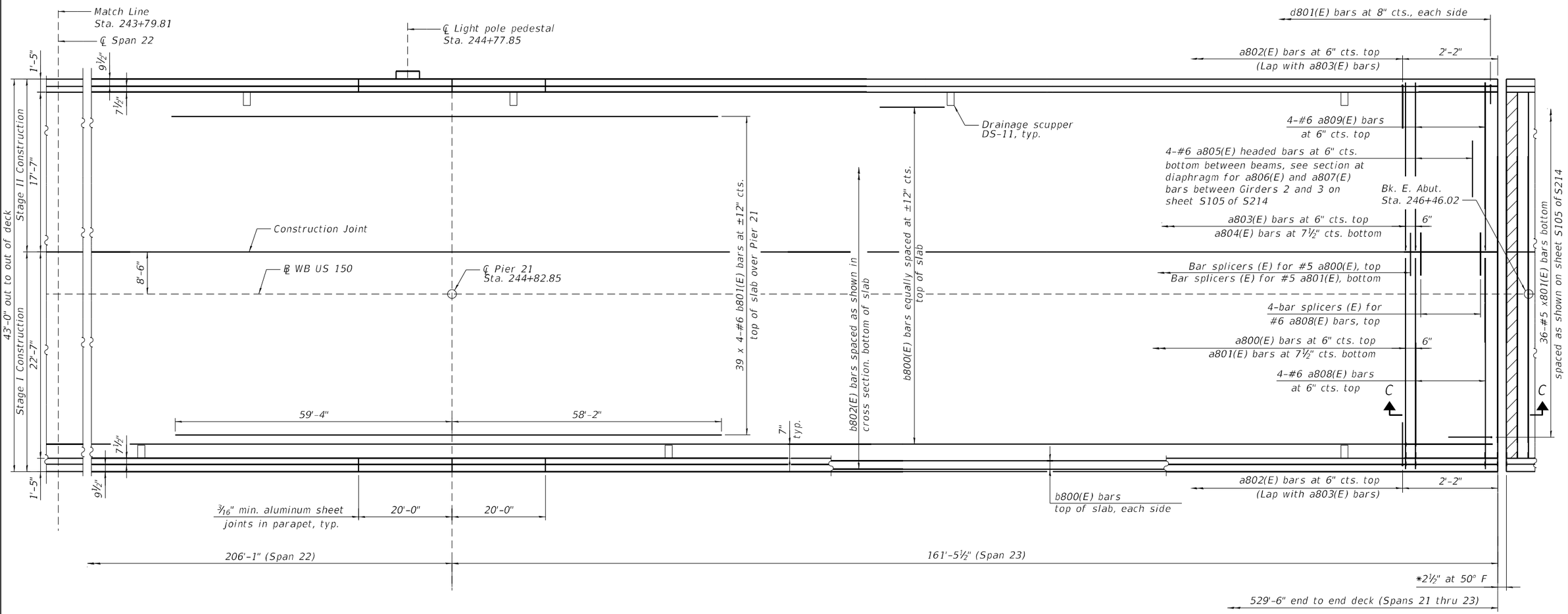

PARTIAL PLAN

Partial Span 22 and Span 23

* Dimension showing deck opening. For strip seal joint opening see sheet S118 of S214.

MINIMUM BAR LAP

#5 bar = 3'-6"
#6 bar = 3'-7"

Notes:

See sheet S101of S214 for cross section.

See sheet S114 of S214 for drainage scupper stations.

See sheet S105 thru S107 of S214 for superstructure details and Bill of Material.

Bars indicated thus 39 x 4-#6 etc. indicates 39 lines of bars with 4 lengths per line.

For Section C-C, see sheet S105of S214.

MODEL: Default
FILE NAME: P:\4312-WBMcClugageRehab\CADD\Structural_SN 090-0115_WBMainBridge_Final Plans\09000115-68E44-100-SupEastApp-Spans 22-23.dgn
3/13/2025 12:49:09 PM

MODJESKI and MASTERS

USER NAME =	DESIGNED - YJ	REVISED -	
	CHECKED - UB	REVISED -	
PLOT SCALE =	DRAWN - AEC	REVISED -	
PLOT DATE =	CHECKED - YJ	REVISED -	

STATE OF ILLINOIS
DEPARTMENT OF TRANSPORTATION

SUPERSTRUCTURE - EAST APROACH - SLAB PLAN - 6
STRUCTURE NO. 090-0115

SHEET S100 OF S214 SHEETS

F.A.P. RTE.	SECTION	COUNTY	TOTAL SHEETS	SHEET NO.
317	(15B-1)BP,BRR	PEO/TAZ	418	270
		CONTRACT NO. 68E44		
		ILLINOIS FED. AID PROJECT		

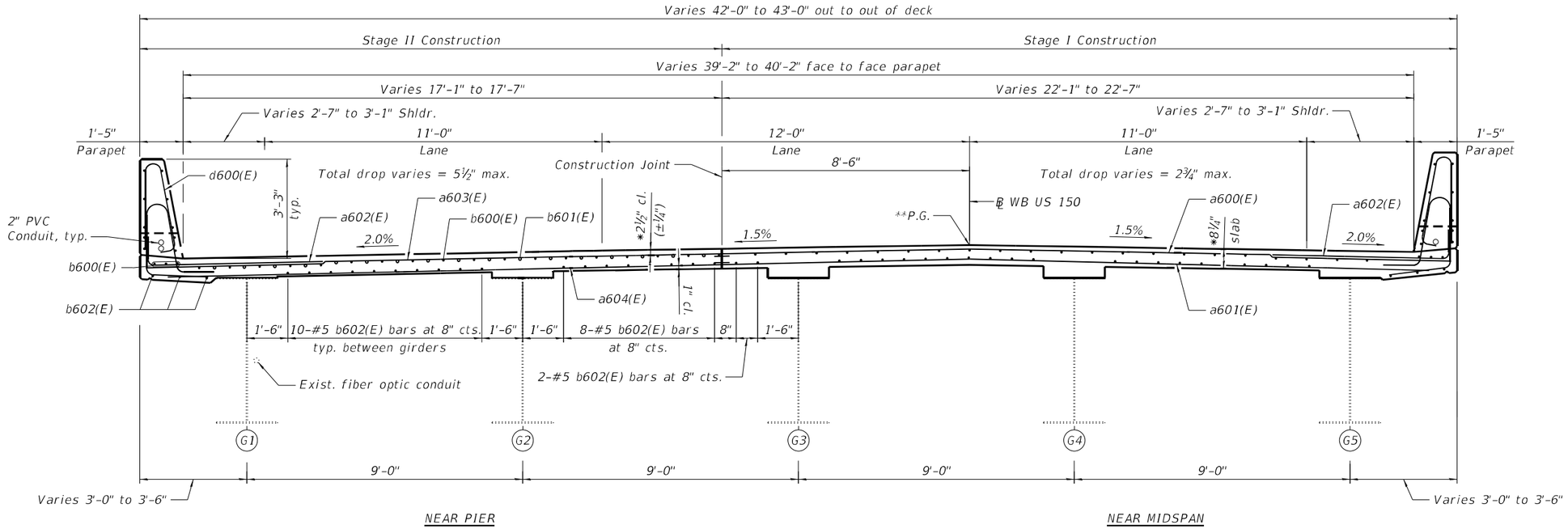

CROSS SECTION - SPANS 15 THRU 17

Looking East

Shoulder width transition from Sta. 230+54.15 to Sta. 230+72.15

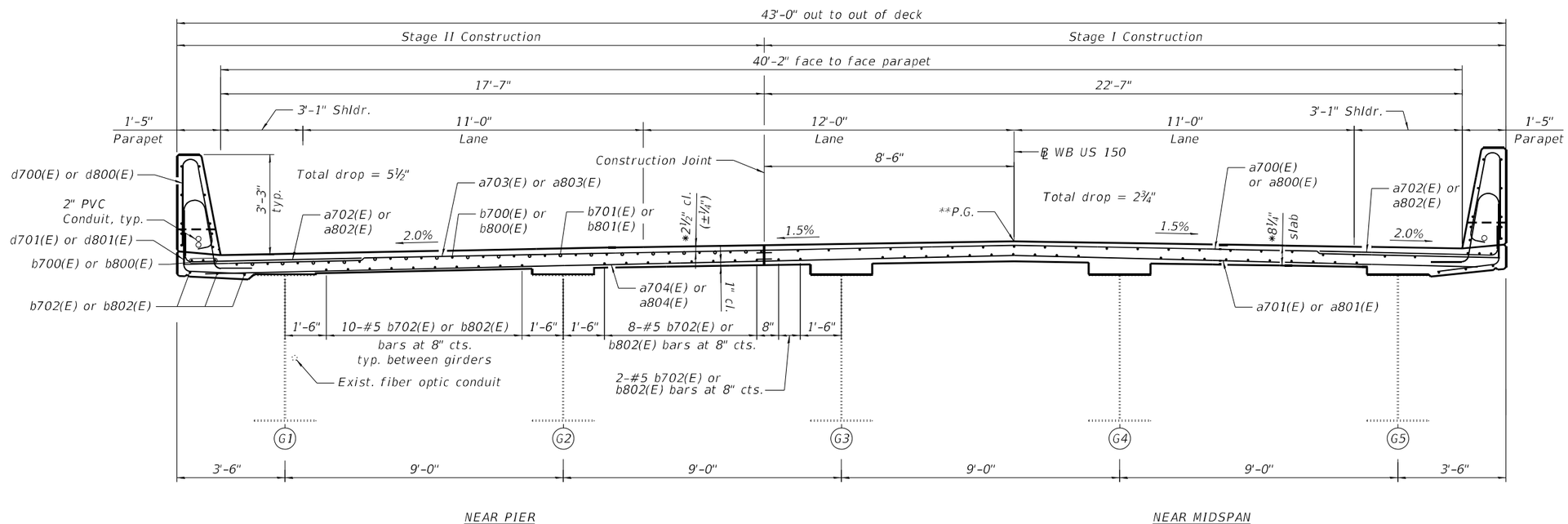

*Prior to grinding

**After grinding

CROSS SECTION - SPANS 18 THRU 23

Looking East

Note:
See sheets S105 thru S107 of S214 for superstructure details and Bill of Material.

MODEL: Default
FILE NAME: P:\4312-WBM-CLugageRehab\CADD\Structural_SN 090-0115_WBMainBridge_Final Plans\0900115-68E44-101-Sup-EastAppr-CrossSection.dgn

3/14/2025 6:30:40 AM

MODJESKI and MASTERS

USER NAME =	DESIGNED - YJ	REVISED -	
	CHECKED - UB	REVISED -	
PLOT SCALE =	DRAWN - AEC	REVISED -	
PLOT DATE =	CHECKED - YJ	REVISED -	

STATE OF ILLINOIS
DEPARTMENT OF TRANSPORTATION

SUPERSTRUCTURE - EAST APPROACH - CROSS SECTION
STRUCTURE NO. 090-0115

SHEET S101 OF S214 SHEETS

F.A.P. RTE.	SECTION	COUNTY	TOTAL SHEETS	SHEET NO.
317	(15B-1)BP,BRR	PEO/TAZ	418	271
		CONTRACT NO. 68E44		
		ILLINOIS FED. AID PROJECT		

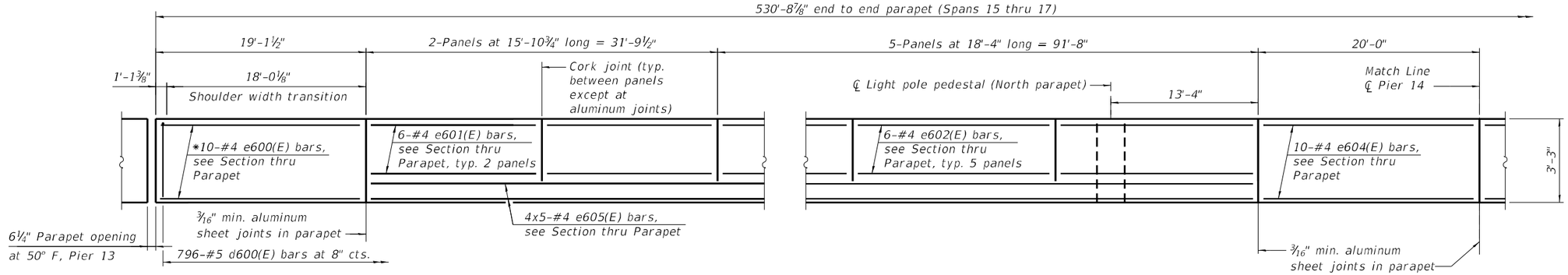

* Bend bar to fit at shoulder width transition

INSIDE ELEVATION OF PARAPET - SPAN 15

North parapet shown, south parapet opposite hand

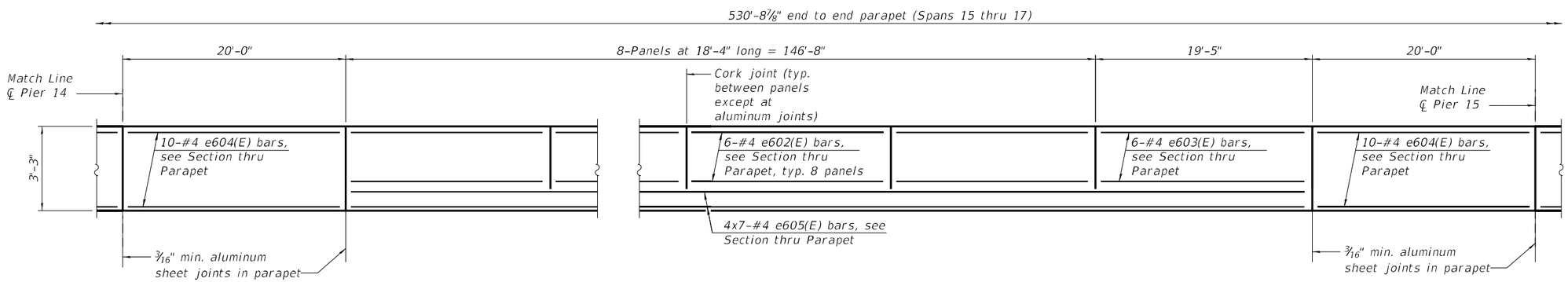

INSIDE ELEVATION OF PARAPET - SPAN 16

North parapet shown, south parapet opposite hand

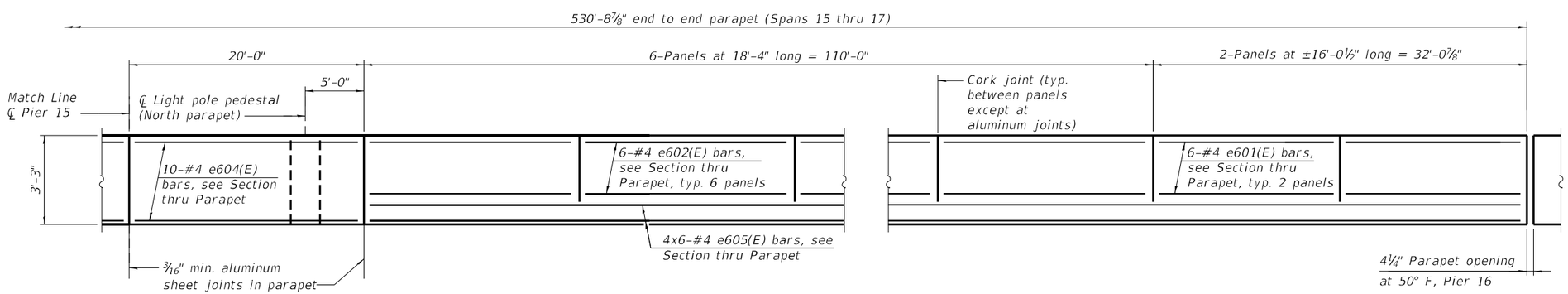

INSIDE ELEVATION OF PARAPET - SPAN 17

North parapet shown, south parapet opposite hand

MINIMUM BAR LAP

#4 bar = 2'-5"

Notes:

See sheet S106 of S214 for section thru parapet.

Bars indicated thus 4x6-#4 etc. indicates 4 line of bars with 6 lengths per line.

MODEL: Default
FILE NAME: P:\4312-WBMcCLugageRehab\CADD\Structural_SN 090-0115_WBMainBridge_Final Plans\09001115-68E44-102-Sup-EastApp-ParapetI.dgn

MODJESKI and MASTERS

USER NAME =	DESIGNED - YJ	REVISED -	
	CHECKED - UB	REVISED -	
PLOT SCALE =	DRAWN - AEC	REVISED -	
PLOT DATE =	CHECKED - YJ	REVISED -	

STATE OF ILLINOIS
DEPARTMENT OF TRANSPORTATION

SUPERSTRUCTURE - EAST APPROACH - PARAPET - 1
STRUCTURE NO. 090-0115

SHEET S102 OF S214 SHEETS

F.A.P. RTE.	SECTION	COUNTY	TOTAL SHEETS	SHEET NO.
317	(15B-1)BP,BRR	PEO/TAZ	418	272

CONTRACT NO. 68E44

ILLINOIS | FED. AID PROJECT

3/13/2025 12:49:58 PM

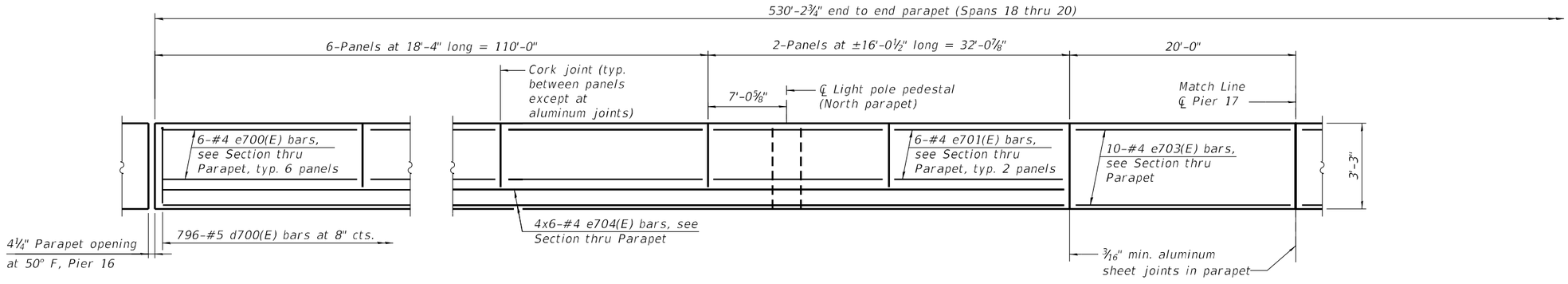

INSIDE ELEVATION OF PARAPET - SPAN 18

North parapet shown, south parapet opposite hand

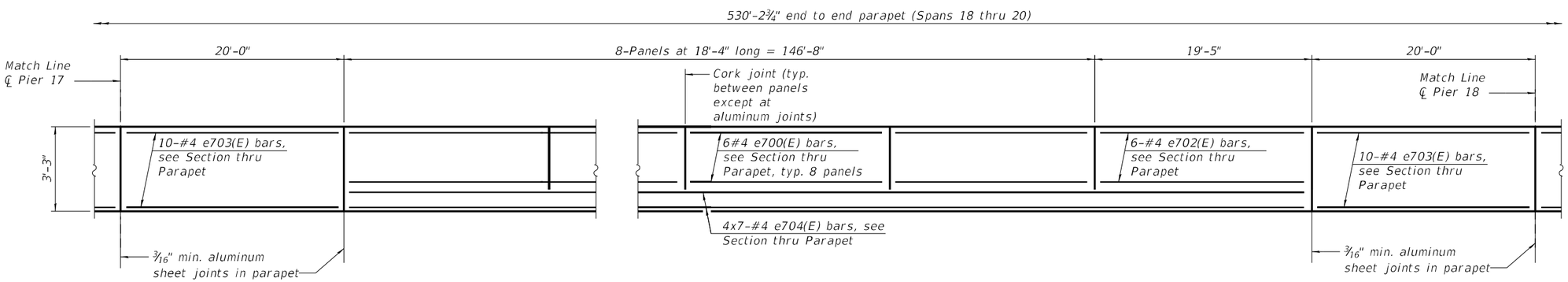

INSIDE ELEVATION OF PARAPET - SPAN 19

North parapet shown, south parapet opposite hand

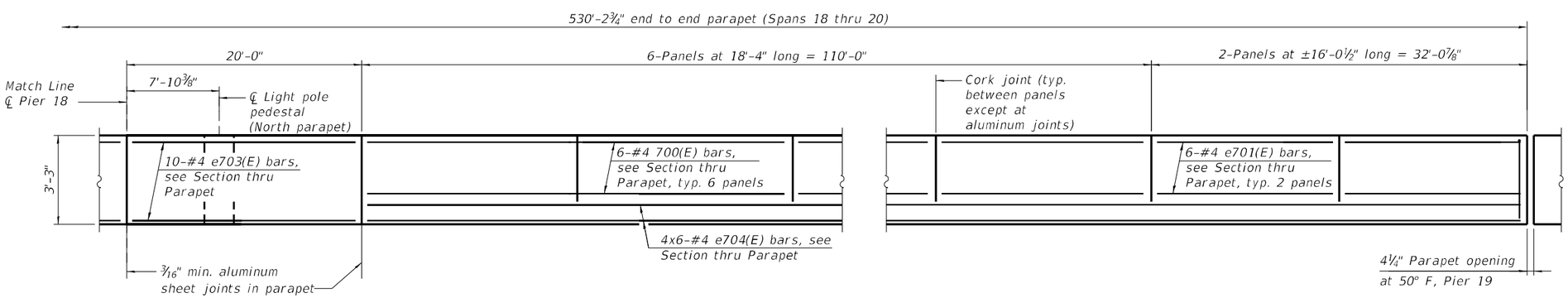

INSIDE ELEVATION OF PARAPET - SPAN 20

North parapet shown, south parapet opposite hand

MINIMUM BAR LAP

#4 bar = 2'-5"

Notes:

See sheet S106 of S214 for section thru parapet.

Bars indicated thus 4x6-#4 etc. indicates 4 line of bars with 6 lengths per line.

MODEL: Default
FILE NAME: P:\4312-WBMcCLugageRehab\CADD\Structural_SN 090-0115_WBMainBridge_Final Plans\09001115-68E44-103-SupEastApp-Parapet2.dgn
3/13/2025 12:50:01 PM

MODJESKI and MASTERS

USER NAME =	DESIGNED - YJ	REVISED -	
	CHECKED - UB	REVISED -	
PLOT SCALE =	DRAWN - AEC	REVISED -	
PLOT DATE =	CHECKED - YJ	REVISED -	

STATE OF ILLINOIS
DEPARTMENT OF TRANSPORTATION

SUPERSTRUCTURE - EAST APPROACH - PARAPET - 2
STRUCTURE NO. 090-0115

SHEET S103 OF S214 SHEETS

F.A.P. RTE.	SECTION	COUNTY	TOTAL SHEETS	SHEET NO.
317	(15B-1)BP,BRR	PEO/TAZ	418	273
		CONTRACT NO. 68E44		
	ILLINOIS	FED. AID PROJECT		

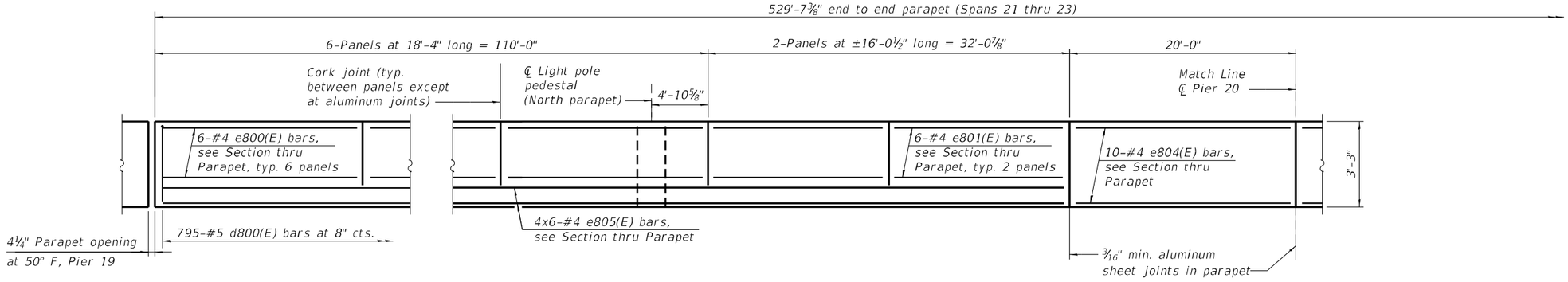

INSIDE ELEVATION OF PARAPET - SPAN 21

North parapet shown, south parapet opposite hand

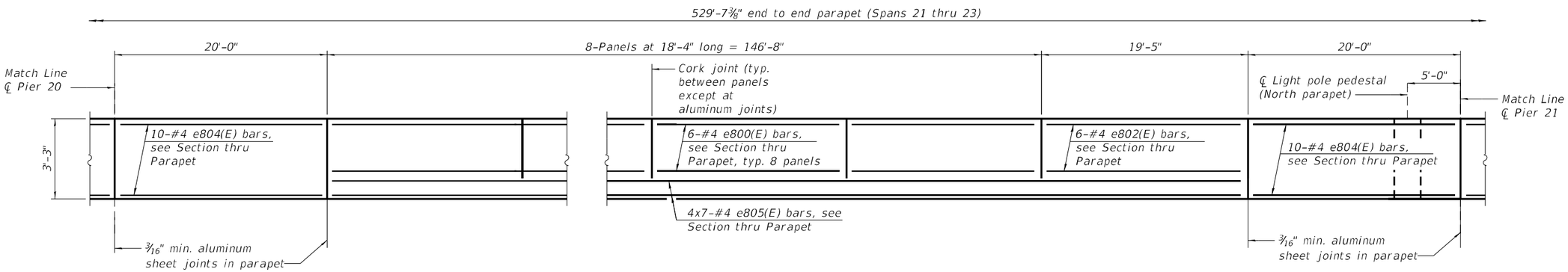

INSIDE ELEVATION OF PARAPET - SPAN 22

North parapet shown, south parapet opposite hand

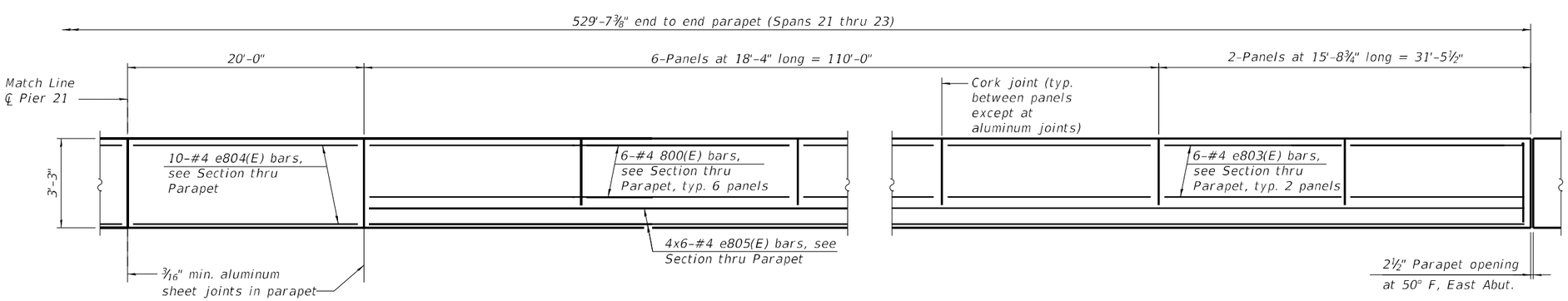

INSIDE ELEVATION OF PARAPET - SPAN 23

North parapet shown, south parapet opposite hand

MINIMUM BAR LAP

#4 bar = 2'-5"

Notes:

See sheet S106 of S214 for section thru parapet.

Bars indicated thus 4x6-#4 etc. indicates 4 line of bars with 5 lengths per line.

MODEL: Default
FILE NAME: P:\4312-WBK-C1LugageRehab\CADD\Structural_SN 090-0115_WBMainBridge_Final Plans\0900115-68E44-104-Sup-EastApp-Parapet3.dgn
3/13/2025 12:50:04 PM

MODJESKI and MASTERS

USER NAME =	DESIGNED - YJ	REVISED -	
	CHECKED - UB	REVISED -	
PLOT SCALE =	DRAWN - AEC	REVISED -	
PLOT DATE =	CHECKED - YJ	REVISED -	

STATE OF ILLINOIS
DEPARTMENT OF TRANSPORTATION

SUPERSTRUCTURE - EAST APPROACH - PARAPET - 3
STRUCTURE NO. 090-0115

SHEET S104 OF S214 SHEETS

F.A.P. RTE.	SECTION	COUNTY	TOTAL SHEETS	SHEET NO.
317	(15B-1)BP,BRR	PEO/TAZ	418	274

CONTRACT NO. 68E44

ILLINOIS | FED. AID PROJECT

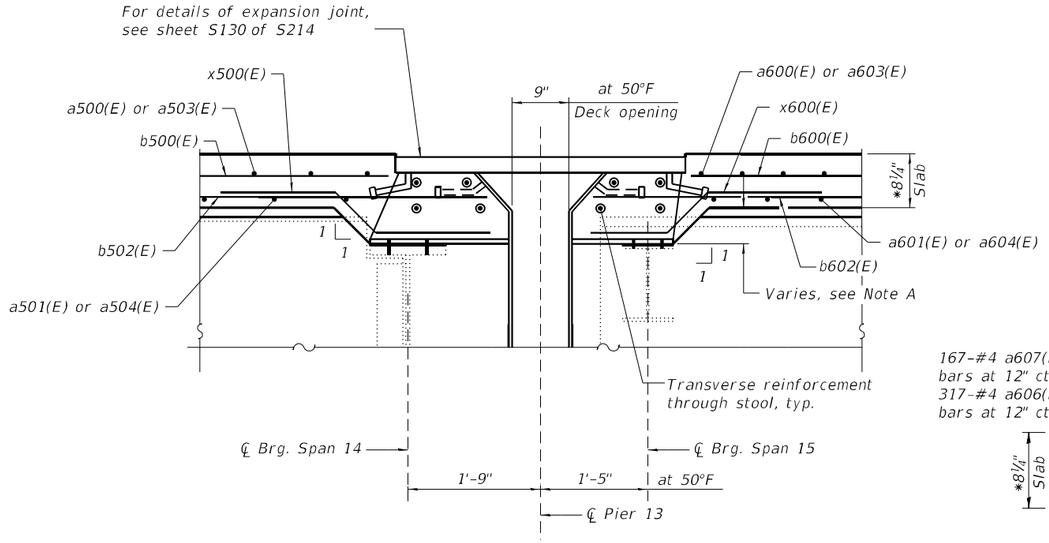

SECTION A-A

Finger ℞ Expansion Joint

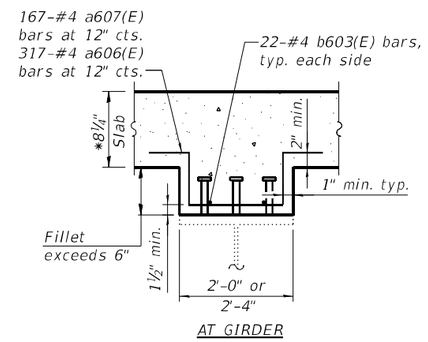

AT GIRDER

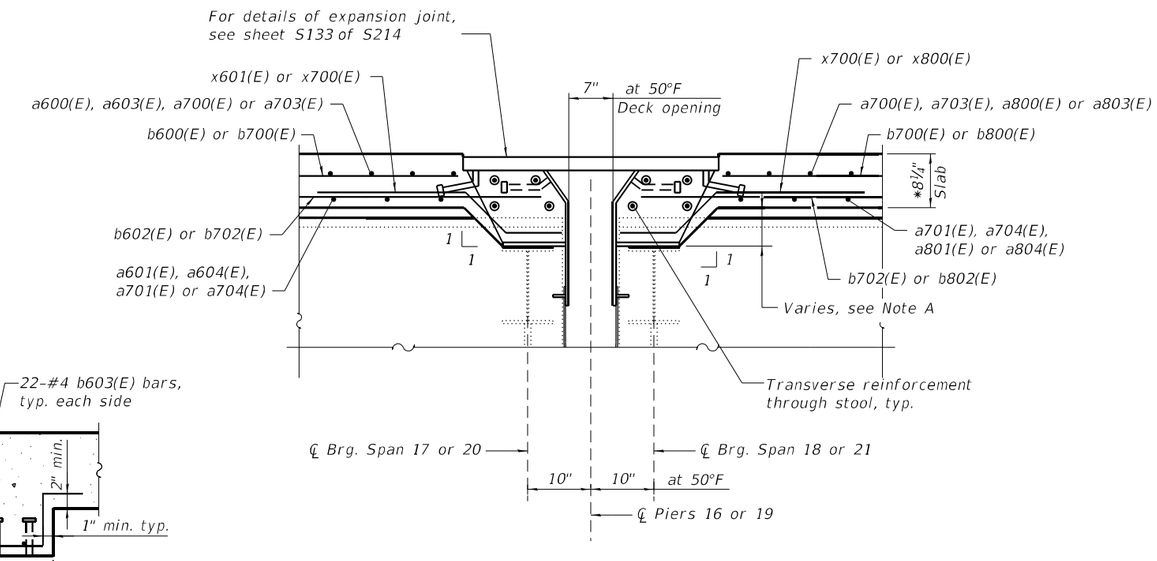

* Prior to grinding
** At East Abutment only

SECTION B-B

Finger ℞ Expansion Joint

DEEP FILLET SECTION - SPANS 15 THRU 17

Estimated total number of bars for Girders 4 and 5 shown, verify in field.

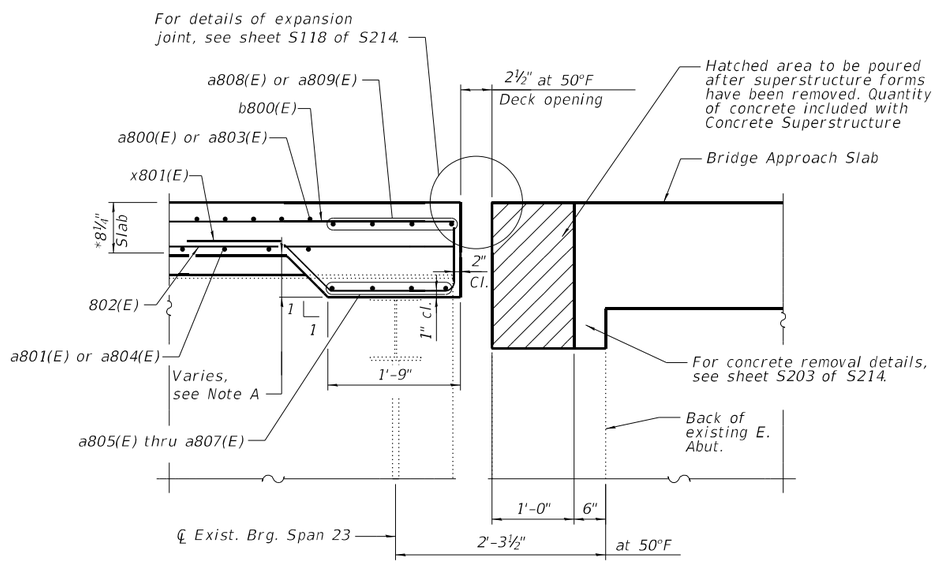

SECTION C-C

Strip Seal Expansion Joint

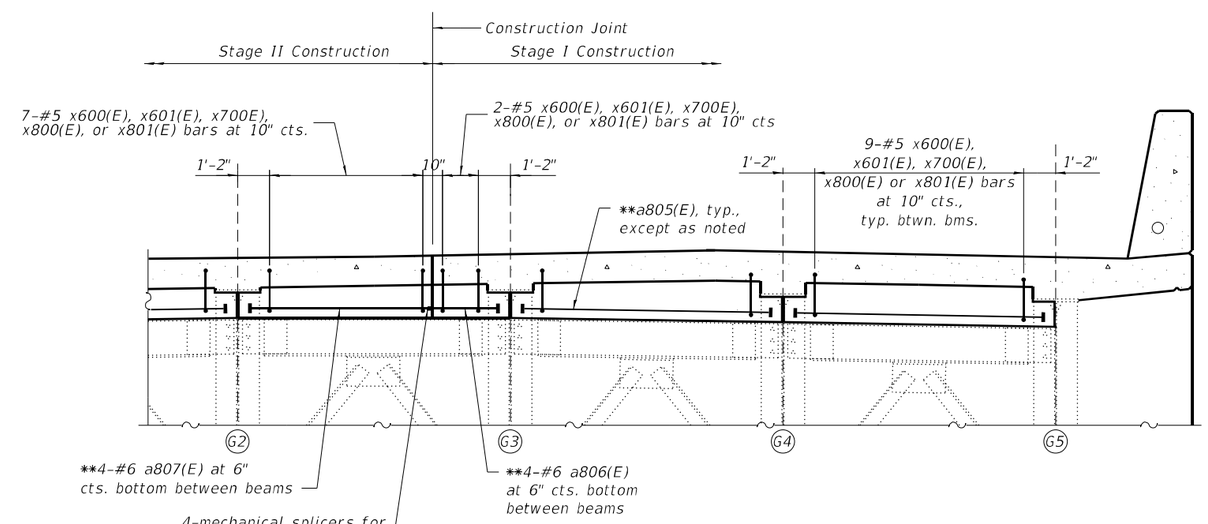

SECTION AT DIAPHRAGM

Looking East
Diaphragm at East Abutment shown, diaphragm at Piers 13, 16, and 19 similar.

Note A:
Dimensions will be provided to the contractor in accordance with the Special Provision "Contractor Requirements for Dead Load Deflection and Top of Slab Elevation Data."

Note:
See sheet S95 thru S100 of S214 for section locations.

MODEL: Default
FILE NAME: P:\4312-WBMcCLugageRehab\CADDS\Structural_SN 090-0115_WBMainBridge_Final Plans\0900115-68E44-105-Sup-EastAppr-Details1.dgn

MODJESKI and MASTERS	USER NAME =	DESIGNED - YJ	REVISED -
		CHECKED - UB	REVISED -
	PLOT SCALE =	DRAWN - AEC	REVISED -
	PLOT DATE =	CHECKED - YJ	REVISED -

STATE OF ILLINOIS
DEPARTMENT OF TRANSPORTATION

SUPERSTRUCTURE - EAST APPROACH - DETAILS - 1
STRUCTURE NO. 090-0115

SHEET S105 OF S214 SHEETS

F.A.P. RTE.	SECTION	COUNTY	TOTAL SHEETS	SHEET NO.
317	(15B-1)BP,BRR	PEO/TAZ	418	275
		CONTRACT NO. 68E44		
	ILLINOIS	FED. AID PROJECT		

3/13/2025 12:50:07 PM

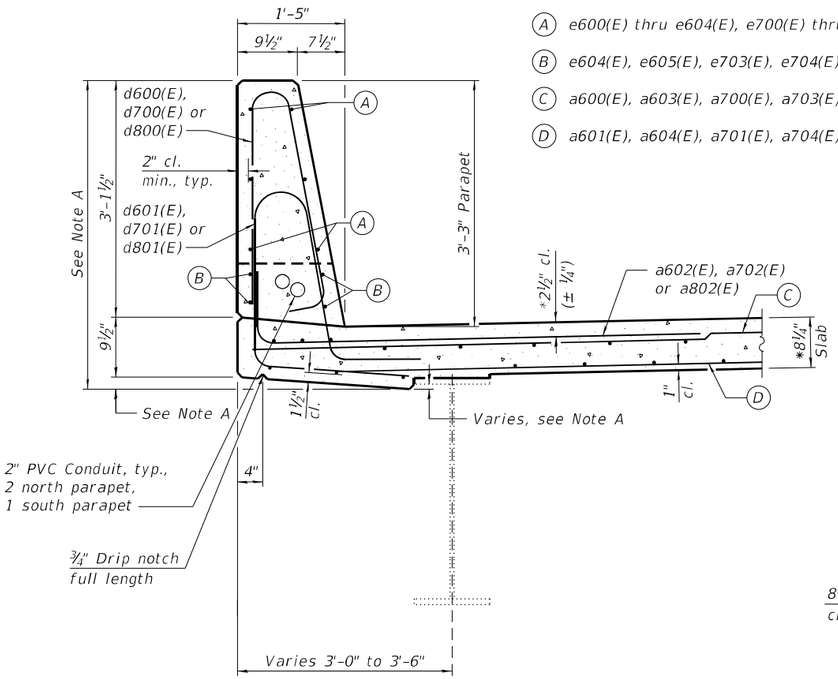

(A) e600(E) thru e604(E), e700(E) thru e703(E), or e800(E) thru e804(E)

(B) e604(E), e605(E), e703(E), e704(E), e804(E), or e805(E)

(C) a600(E), a603(E), a700(E), a703(E), a800(E), or a803(E)

(D) a601(E), a604(E), a701(E), a704(E), a801(E), or a804(E)

SECTION THRU PARAPET

* Prior to grinding

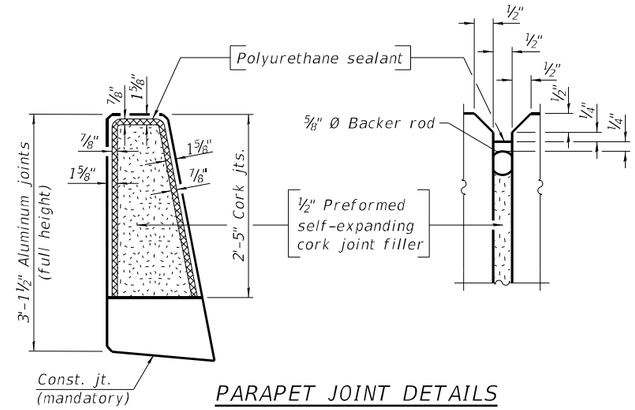

PARAPET JOINT DETAILS

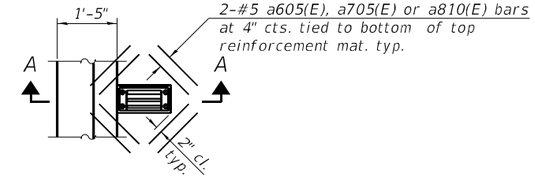

DRAINAGE SCUPPER REINFORCEMENT

a605(E), a705(E), and a810(E) required at 13 locations each
Note: Cut longitudinal reinforcement to clear drainage scuppers.

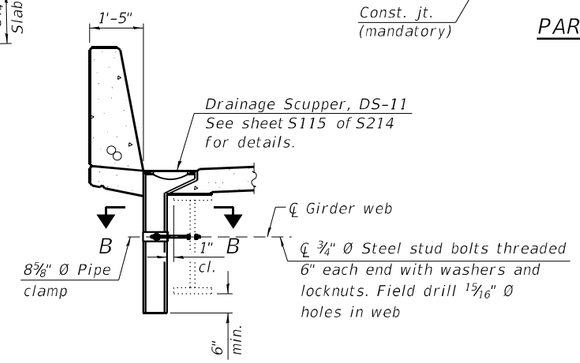

SECTION A-A

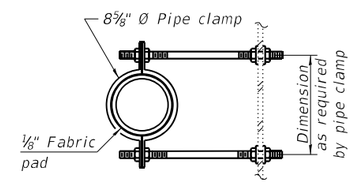

SECTION B-B

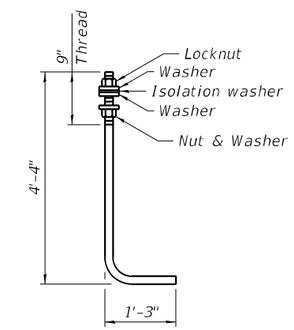

ANCHOR ROD

Diameter as specified for light poles. (ASTM F 1554 Grade 105) Full length hot dipped galvanized.

Note A:
Dimensions will be provided to the Contractor in accordance with the Special Provision "Contractor Requirements for Dead Load Deflection and Top of Slab Elevation Data."

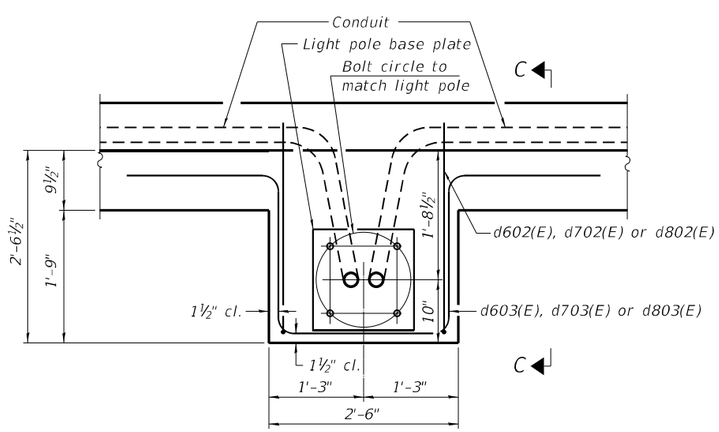

LIGHT POLE PEDESTAL PLAN

6 Locations required
See Highway Standard 812001.

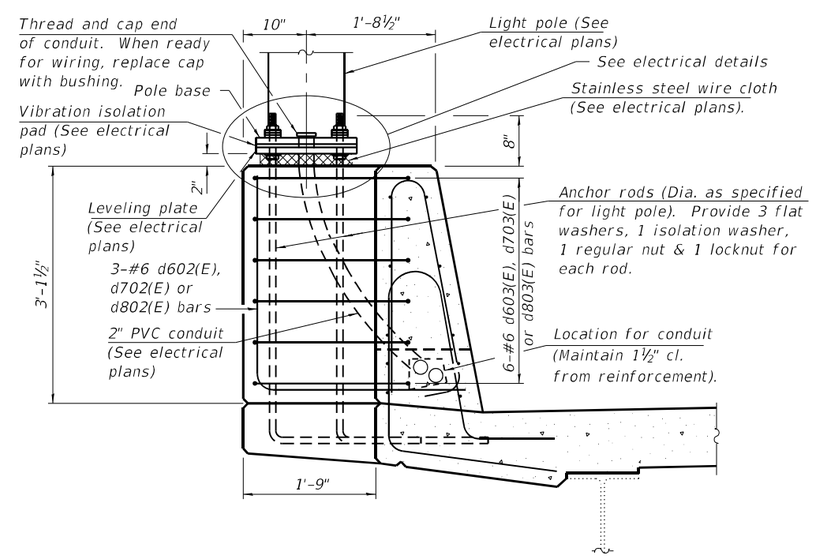

SECTION C-C

Notes:
The clamping device shall be galvanized according to AASHTO M 232. Cost of clamping device included with Drainage Scupper.
The 3/16" min. aluminum sheet shall be ASTM B 209 alloy 3003-H14 and coated to minimize reaction with wet concrete. Cost included with Concrete Superstructure.
The Polyurethane Sealant shall be according to Article 1050.04 of the Std. Spec. and the color shall be gray.
Cost of anchor rods is included with Concrete Superstructure.
Apply protective coat to the top surface of the light pole pedestal according to Article 503.19 of the Standard Specifications.

MODEL: Default
FILE NAME: P:\4312-WBMcCLugeyeRehab\CADD\Structural_SN 090-0115_WBMainBridge_Final Plans\09001115-68E44-106-Sup-EastApp-Details2.dgn

MODJESKI and MASTERS	USER NAME =	DESIGNED - YJ	REVISED -
		CHECKED - UB	REVISED -
	PLOT SCALE =	DRAWN - AEC	REVISED -
	PLOT DATE =	CHECKED - YJ	REVISED -

STATE OF ILLINOIS
DEPARTMENT OF TRANSPORTATION

SUPERSTRUCTURE - EAST APPROACH - DETAILS - 2
STRUCTURE NO. 090-0115

SHEET S106 OF S214 SHEETS

F.A.P. RTE.	SECTION	COUNTY	TOTAL SHEETS	SHEET NO.
317	(15B-1)BP,BRR	PEO/TAZ	418	276
		CONTRACT NO. 68E44		
		ILLINOIS FED. AID PROJECT		

3/13/2025 12:50:09 PM

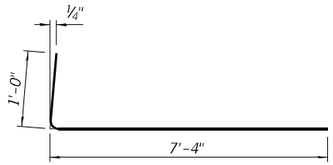

BARS a602(E), a702(E), and a802(E)

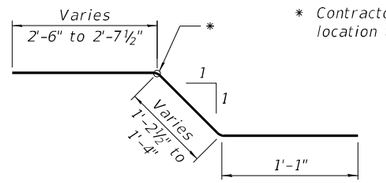

* Contractor shall bend this location to fit in field

BAR x600(E)

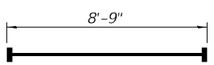

BAR a805(E)
(Headed. 24-#6 Bar terminators)

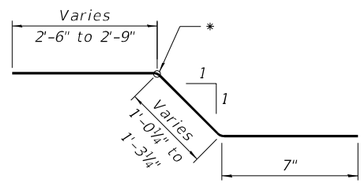

BAR x601(E)

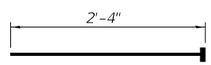

BAR a806(E)
(Headed. 4-#6 Bar terminators)

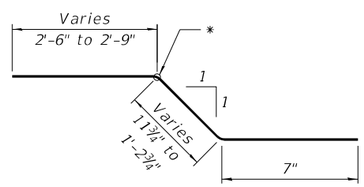

BAR x700(E)

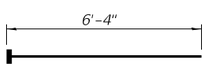

BAR a807(E)
(Headed. 4-#6 Bar terminators)

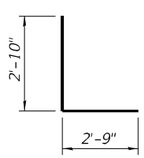

BARS d602(E), d702(E), and d802(E)

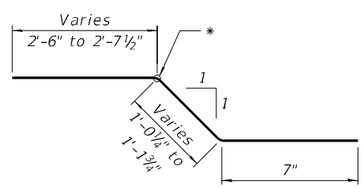

BAR x800(E)

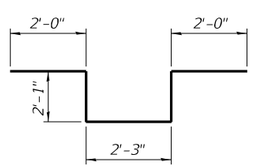

BARS d603(E), d703(E), and d803(E)

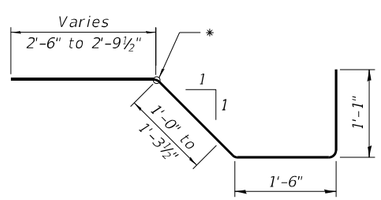

BAR x801(E)

SUPERSTRUCTURE BILL OF MATERIAL SPANS 15 THRU 17

Bar	No.	Size	Length	Shape
a600(E)	1061	#5	23'-9"	
a601(E)	849	#5	23'-6"	
a602(E)	2122	#6	8'-4"	
a603(E)	1061	#5	18'-9"	
a604(E)	849	#5	18'-6"	
a605(E)	104	#5	1'-6"	
a606(E)	317	#4	4'-3"	
a607(E)	167	#4	4'-6"	
b600(E)	920	#5	29'-11"	
b601(E)	312	#6	32'-0"	
b602(E)	966	#5	28'-7"	
b603(E)	44	#4	25'-0"	
d600(E)	1592	#5	6'-5"	
d601(E)	1592	#5	8'-2"	
d602(E)	6	#6	5'-7"	
d603(E)	12	#6	10'-5"	
e600(E)	20	#4	18'-10"	
e601(E)	48	#4	15'-7"	
e602(E)	228	#4	18'-1"	
e603(E)	12	#4	19'-2"	
e604(E)	80	#4	19'-9"	
e605(E)	144	#4	26'-7"	
x600(E)	36	#5	4'-11"	
x601(E)	36	#5	4'-5"	
Concrete Superstructure			Cu. Yd.	870.6
Protective Coat			Sq. Yd.	2,852
Reinforcement Bars, Epoxy Coated			Pound	217,660

SUPERSTRUCTURE BILL OF MATERIAL SPANS 18 THRU 20

Bar	No.	Size	Length	Shape
a700(E)	1060	#5	23'-9"	
a701(E)	849	#5	23'-6"	
a702(E)	2120	#6	8'-4"	
a703(E)	1060	#5	18'-9"	
a704(E)	849	#5	18'-6"	
a705(E)	104	#5	1'-6"	
b700(E)	920	#5	29'-10"	
b701(E)	312	#6	32'-0"	
b702(E)	966	#5	28'-7"	
d700(E)	1592	#5	6'-5"	
d701(E)	1592	#5	8'-2"	
d702(E)	6	#6	5'-7"	
d703(E)	12	#6	10'-5"	
e700(E)	240	#4	18'-1"	
e701(E)	48	#4	15'-9"	
e702(E)	12	#4	19'-2"	
e703(E)	80	#4	19'-9"	
e704(E)	152	#4	25'-10"	
x700(E)	72	#5	4'-4"	
Concrete Superstructure			Cu. Yd.	856.2
Protective Coat			Sq. Yd.	2,850
Reinforcement Bars, Epoxy Coated			Pound	215,320

SUPERSTRUCTURE BILL OF MATERIAL SPANS 21 THRU 23

Bar	No.	Size	Length	Shape
a800(E)	1055	#5	23'-9"	
a801(E)	845	#5	23'-6"	
a802(E)	2110	#6	8'-4"	
a803(E)	1055	#5	18'-9"	
a804(E)	845	#5	18'-6"	
a805(E)	12	#6	8'-9"	
a806(E)	4	#6	2'-4"	
a807(E)	4	#6	6'-4"	
a808(E)	4	#6	23'-9"	
a809(E)	4	#6	18'-9"	
a810(E)	104	#5	1'-6"	
b800(E)	920	#5	29'-10"	
b801(E)	312	#6	32'-1"	
b802(E)	966	#5	28'-7"	
d800(E)	1590	#5	6'-5"	
d801(E)	1590	#5	8'-2"	
d802(E)	6	#6	5'-7"	
d803(E)	12	#6	10'-5"	
e800(E)	240	#4	18'-1"	
e801(E)	24	#4	15'-9"	
e802(E)	12	#4	19'-2"	
e803(E)	24	#4	15'-5"	
e804(E)	80	#4	19'-9"	
e805(E)	152	#4	25'-10"	
x800(E)	36	#5	4'-3"	
x801(E)	36	#5	6'-5"	
Concrete Superstructure			Cu. Yd.	864.5
Protective Coat			Sq. Yd.	2,847
Reinforcement Bars, Epoxy Coated			Pound	215,340

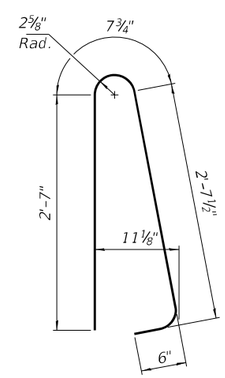

BARS d600(E), d700(E), and d800(E)

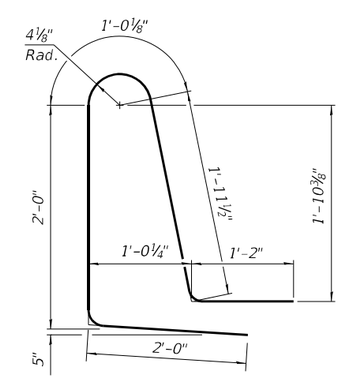

BARS d601(E), d701(E), and d801(E)

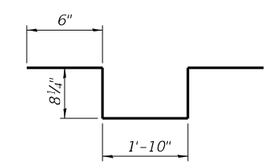

BAR a606(E)

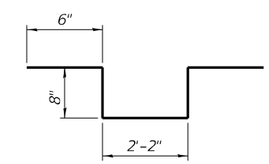

BAR a607(E)

Notes:
Bar terminators, paid for separately. See Total Bill of Material.
For bar splicer and mechanical splicer details, see sheet S214 of S214.

MODEL: Default
FILE NAME: P:\4312-WBMcCLugageRehab\CADD\Structural_SN 090-0115_WBMainBridge_Final Plans\09001 15-68E44-107-Sup-EastApp-Details3.dgn

3/13/2025 12:50:13 PM

MODJESKI and MASTERS

USER NAME =	DESIGNED - YJ	REVISED -	
	CHECKED - UB	REVISED -	
PLOT SCALE =	DRAWN - AEC	REVISED -	
PLOT DATE =	CHECKED - YJ	REVISED -	

STATE OF ILLINOIS
DEPARTMENT OF TRANSPORTATION

SUPERSTRUCTURE - EAST APPROACH - DETAILS - 3
STRUCTURE NO. 090-0115

SHEET S107 OF S214 SHEETS

F.A.P. RTE.	SECTION	COUNTY	TOTAL SHEETS	SHEET NO.
317	(15B-1)BP,BRR	PEO/TAZ	418	277
		CONTRACT NO. 68E44		
		ILLINOIS	FED. AID PROJECT	

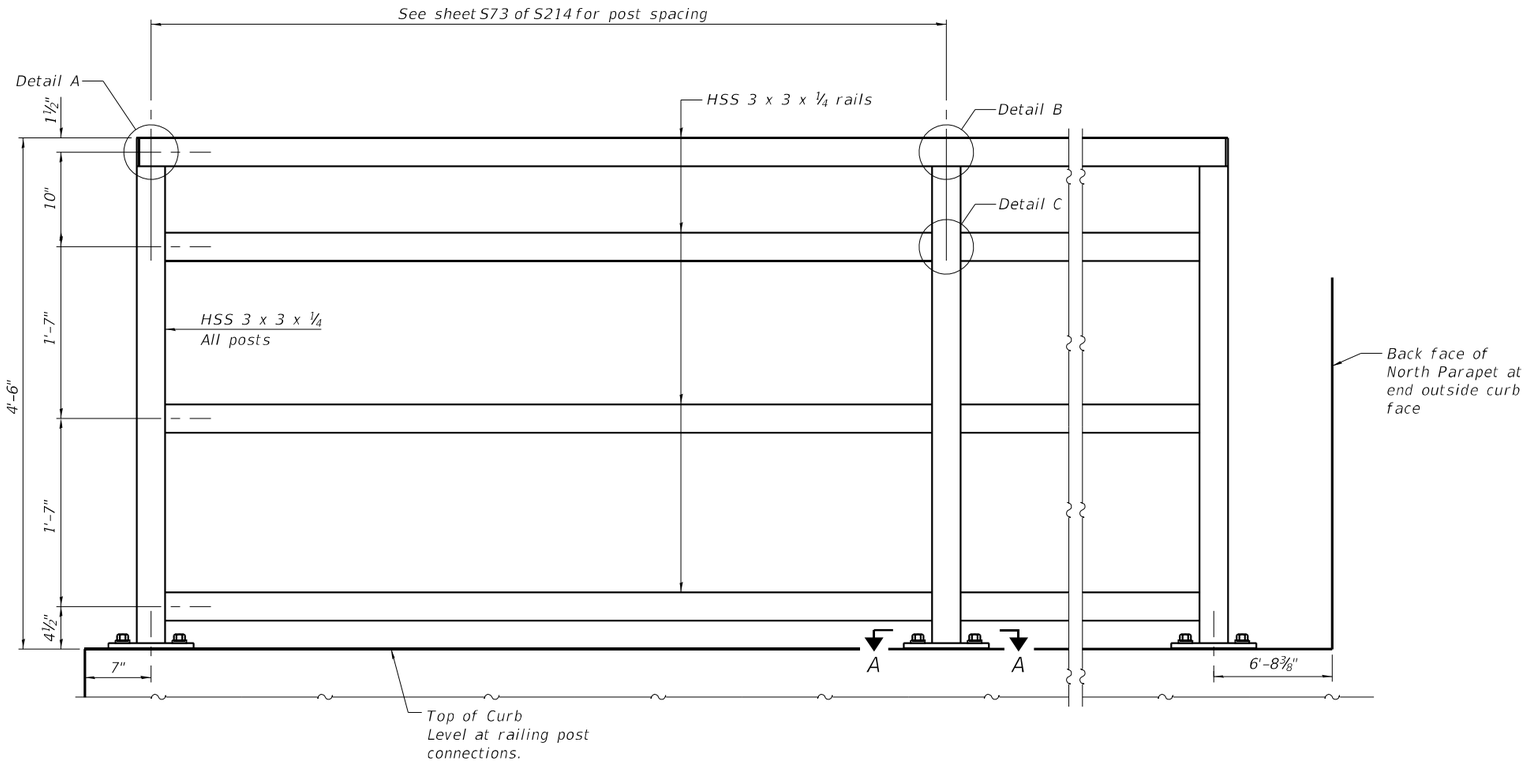

ELEVATION PEDESTRIAN RAILING

(Inside face)

Railing on Curb - Spans 6 Thru 8 shown, railing on Curb at Pier 4 similar

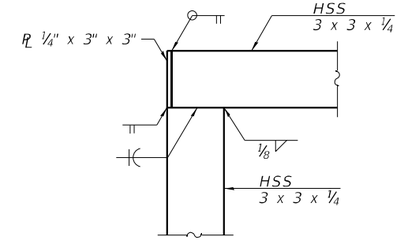

DETAIL A

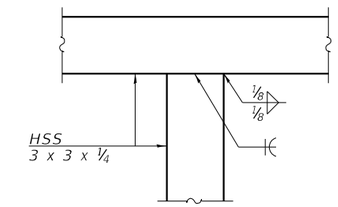

DETAIL B

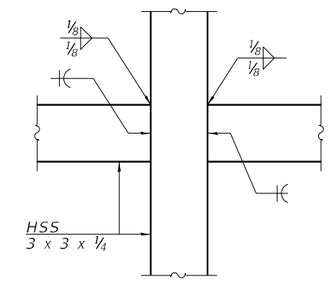

DETAIL C

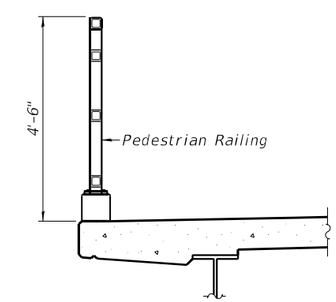

SECTION THRU DECK

MODEL: Default
FILE NAME: P:\4312-WBMcCLugageRehab\CADD\Structural_SN 090-0115_WBMainBridge_Final Plans\0900115-68E44-108-PedRail-1.dgn

MODJESKI and MASTERS	USER NAME =	DESIGNED - YSS	REVISED -
		CHECKED - RLM	REVISED -
	PLOT SCALE =	DRAWN - AEC	REVISED -
	PLOT DATE =	CHECKED - YSS	REVISED -

STATE OF ILLINOIS
DEPARTMENT OF TRANSPORTATION

PEDESTRIAN RAILING - 1
STRUCTURE NO. 090-0115

SHEET S108 OF S214 SHEETS

F.A.P. RTE.	SECTION	COUNTY	TOTAL SHEETS	SHEET NO.
317	(15B-1)BP,BRR	PEO/TAZ	418	278
		CONTRACT NO. 68E44		
	ILLINOIS	FED. AID PROJECT		

3/13/2025 12:50:17 PM

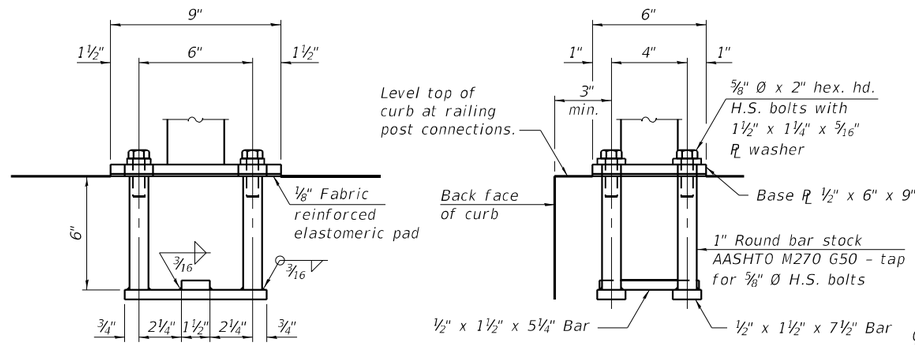

ANCHORAGE ASSEMBLY

In lieu of the cast-in-place anchor device shown, the Contractor has the option of drilling and setting ⅝" Ø fully threaded anchor rods with the same plate washers as specified above and heavy hex lock nuts according to Article 509.06 of the Standard Specifications. Embedment shall be according to the manufacturer's specifications.

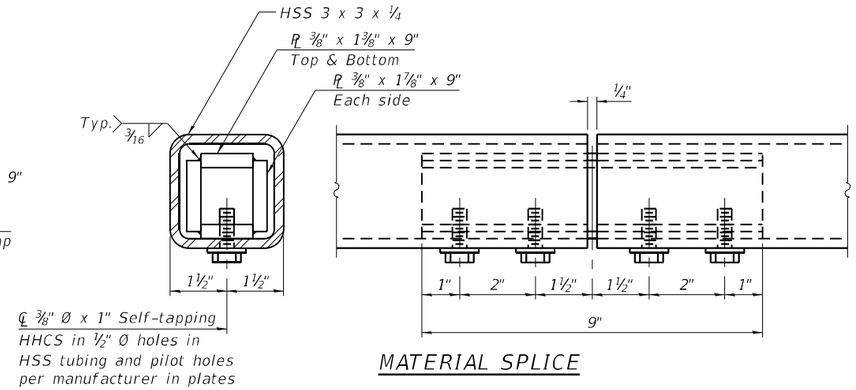

MATERIAL SPLICE

Notes:

Place reinforcement bars to miss anchor rod locations.

CVN testing is not required for the HSS tubing used in the Pedestrian Railing.

All heavy hex nuts shall be according to ASTM A 563 grade DH.

All fully threaded anchor rods shall be ASTM F1554 grade 105.

The post base plate shall be fastened to the curb snug tight and given an additional ⅛" turn.

Rail splice inserts may be built out of bent plates of the same thicknesses and outside geometry limits as the 4 plate rail splice inserts shown.

All steel rail elements shall be galvanized according to Article 509.05 of the Standard Specifications.

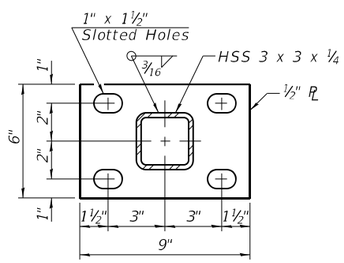

SECTION A-A

BILL OF MATERIAL

Item	Unit	Quantity
Pedestrian Railing	Foot	519

MODEL: Default
FILE NAME: P:\4312-WBMcCLugageRehab\CADD\Structural_SN 090-0115_WBMainBridge_Final Plans\0900115-68E44-109-PedRail-2.dgn

3/13/2025 12:50:20 PM

MODJESKI and MASTERS

USER NAME =	DESIGNED - YSS	REVISED -	
	CHECKED - RLM	REVISED -	
PLOT SCALE =	DRAWN - AEC	REVISED -	
PLOT DATE =	CHECKED - YSS	REVISED -	

STATE OF ILLINOIS
DEPARTMENT OF TRANSPORTATION

PEDESTRIAN RAILING - 2
STRUCTURE NO. 090-0115

SHEET S109 OF S214 SHEETS

F.A.P. RTE.	SECTION	COUNTY	TOTAL SHEETS	SHEET NO.
317	(15B-1)BP,BRR	PEO/TAZ	418	279

CONTRACT NO. 68E44

ILLINOIS | FED. AID PROJECT

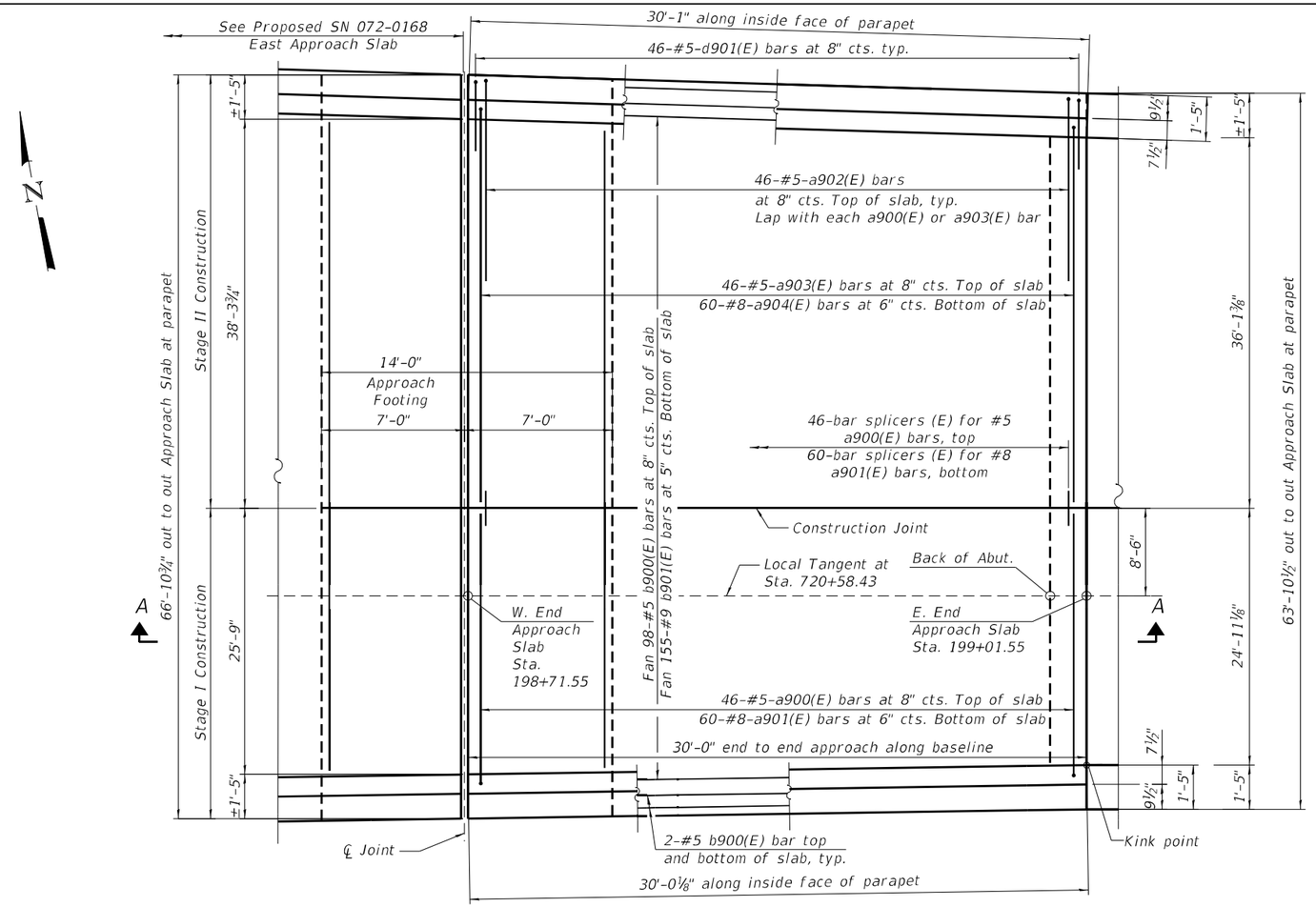

PLAN - WEST BRIDGE APPROACH SLAB

* Prior to grinding
** After grinding

Notes:

See sheet S20 of S31 of the Structural Plans (SN 072-0168) for approach footing details, including top and bottom elevations.

Trim a900(E), a901(E), a903(E), and a904(E) bars in field to fit .

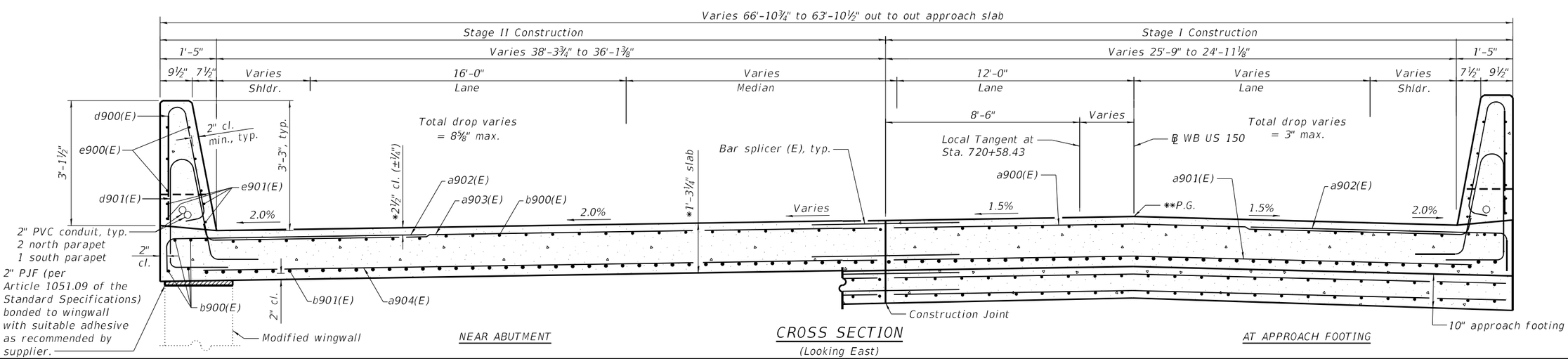

NEAR ABUTMENT

CROSS SECTION

(Looking East)

AT APPROACH FOOTING

MODJESKI and MASTERS	USER NAME =	DESIGNED - YJ	REVISED -	STATE OF ILLINOIS DEPARTMENT OF TRANSPORTATION	BRIDGE APPROACH SLAB DETAILS AT WEST ABUTMENT - 1 STRUCTURE NO. 090-0115	F.A.P. RTE.	SECTION	COUNTY	TOTAL SHEETS	SHEET NO.
		CHECKED - YSS	REVISED -			317	(15B-1)BP,BRR	PEO/TAZ	418	280
	PLOT SCALE =	DRAWN - AEC	REVISED -					CONTRACT NO. 68E44		
	PLOT DATE =	CHECKED - YSS	REVISED -		SHEET S110 OF S214 SHEETS		ILLINOIS	FED. AID PROJECT		

MODEL: Default
FILE NAME: P:\4312-WBMcCLugageRehab\CADDStructural_SN 090-0115_WBMainBridge_Final Plans\0900115-68E44-110-Sup-ApprSlabDtlsWAbut1.dgn
3/13/2025 12:50:23 PM

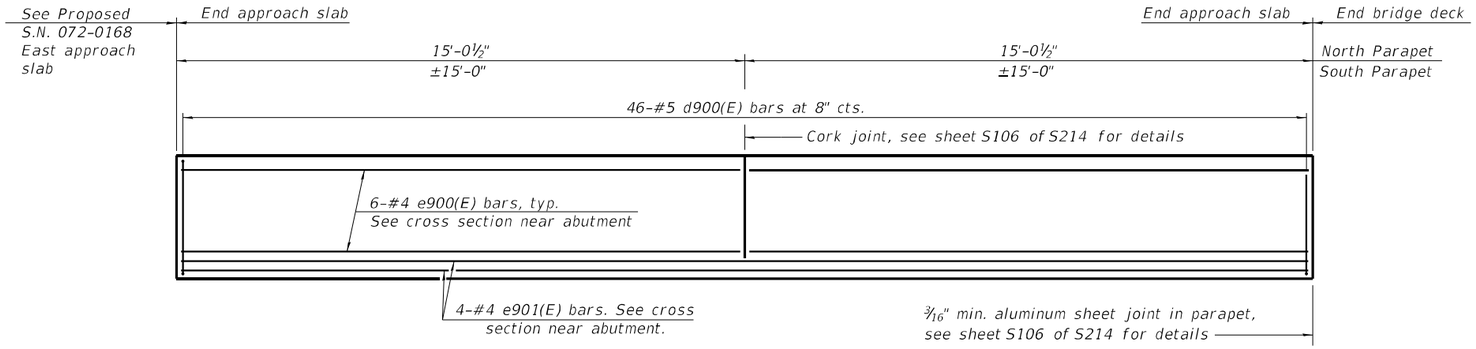

INSIDE ELEVATION OF PARAPET

North parapet shown, south parapet opposite hand.

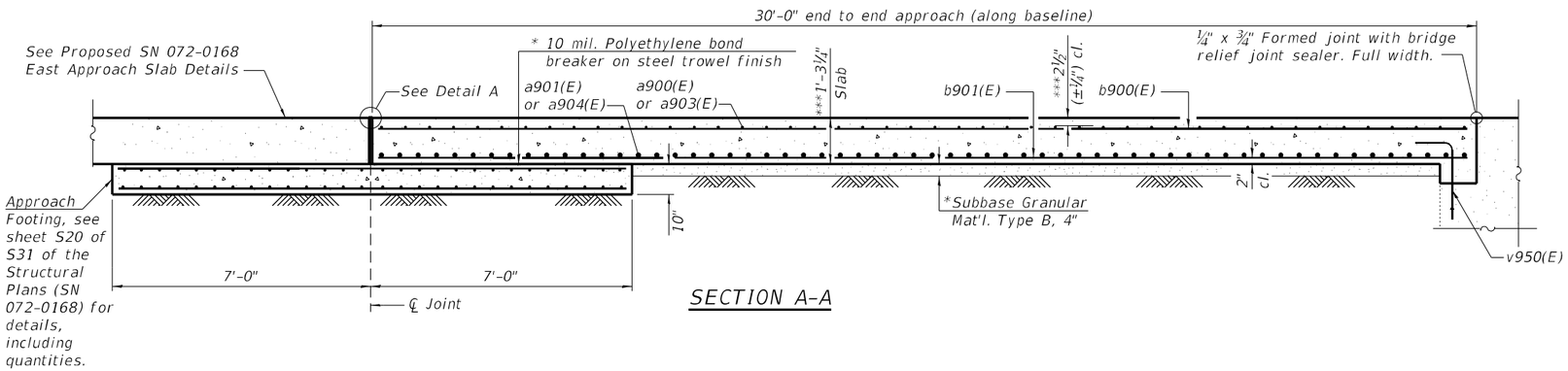

SECTION A-A

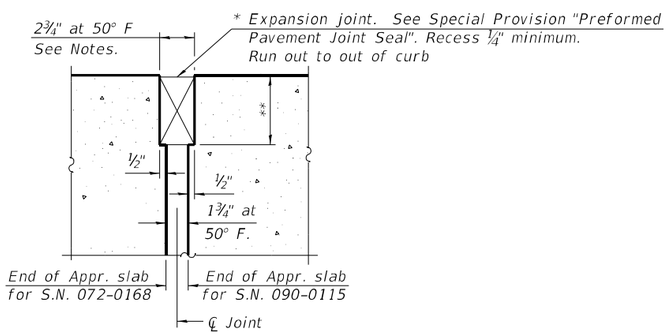

DETAIL A

* Cost included with Concrete Superstructure (Approach Slab).

** Per manufacturer recommendations

*** Prior to grinding

Notes:

The joint opening shall be adjusted for temperature per Article 520.04 of the Standard Specifications. However, since this detail is for jointless structures, the length of bridge used to calculate the adjustment shall be equal to half the total bridge length of SN 072-0168 plus the bridge approach slab lengths of SN 072-0168 and 090-0015.

Removal of the existing bridge approach slab and parapet shall be included with Removal of Existing Concrete Deck No. 2.

Removal of the existing approach footing shall be paid for as Concrete Removal. The quantity of concrete removal for the portion of the existing approach footing supporting SN 090-0115 is included in SN 072-0168.

Parapet concrete shall be paid for as Concrete Superstructure.

Approach slab shall be paid for as Concrete Superstructure (Approach Slab).

The approach footing maximum applied service bearing pressure (Qmax) = 2.0 ksf.

Cost of excavation for approach footing included with Concrete Structures.

Cost of preformed joint filler and adhesive included with Concrete Superstructure (Approach Slab).

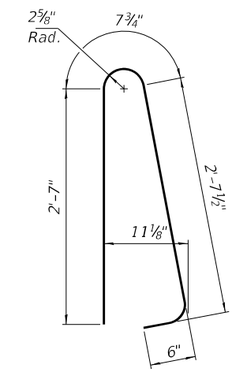

BAR d900(E)

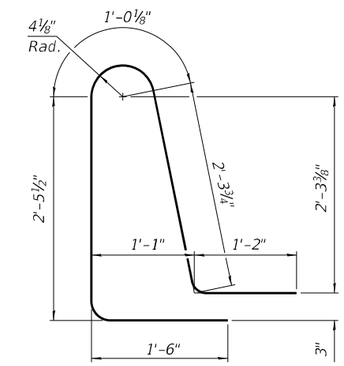

BAR d901(E)

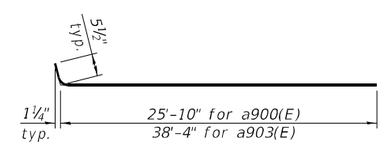

BARS a900(E) and a903(E)

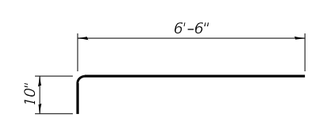

BAR a902(E)

WEST APPROACH BILL OF MATERIAL

Bar	No.	Size	Length	Shape
a900(E)	46	#5	26'-3"	
a901(E)	60	#8	25'-11"	
a902(E)	92	#5	7'-4"	
a903(E)	46	#5	38'-10"	
a904(E)	60	#8	38'-5"	
b900(E)	106	#5	29'-8"	
b901(E)	155	#9	29'-8"	
d900(E)	92	#5	6'-5"	
d901(E)	92	#5	8'-6"	
e900(E)	24	#4	14'-8"	
e901(E)	8	#4	29'-8"	
Concrete Superstructure			Cu. Yd.	7.8
Concrete Superstructure (Approach Slab)			Cu. Yd.	92.4
Protective Coat			Sq. Yd.	236
Reinforcement Bars, Epoxy Coated			Pound	34,880

MODEL: Default
FILE NAME: P:\4312-VBM\CLugageRehab\CADD\Structural_SN 090-0115_WBMainBridge_Final Plans\09000115-68E44-111-Sup-ApprSlabDtlsWAbut2.dgn

MODJESKI and MASTERS

USER NAME =	DESIGNED - YJ	REVISED -
	CHECKED - YSS	REVISED -
PLOT SCALE =	DRAWN - AEC	REVISED -
PLOT DATE =	CHECKED - YSS	REVISED -

STATE OF ILLINOIS
DEPARTMENT OF TRANSPORTATION

BRIDGE APPROACH SLAB DETAILS AT WEST ABUTMENT - 2
STRUCTURE NO. 090-0115

SHEET S111 OF S214 SHEETS

F.A.P. RTE.	SECTION	COUNTY	TOTAL SHEETS	SHEET NO.
317	(15B-1)BP,BRR	PEO/TAZ	418	281
		CONTRACT NO. 68E44		
		ILLINOIS FED. AID PROJECT		

3/13/2025 12:50:25 PM

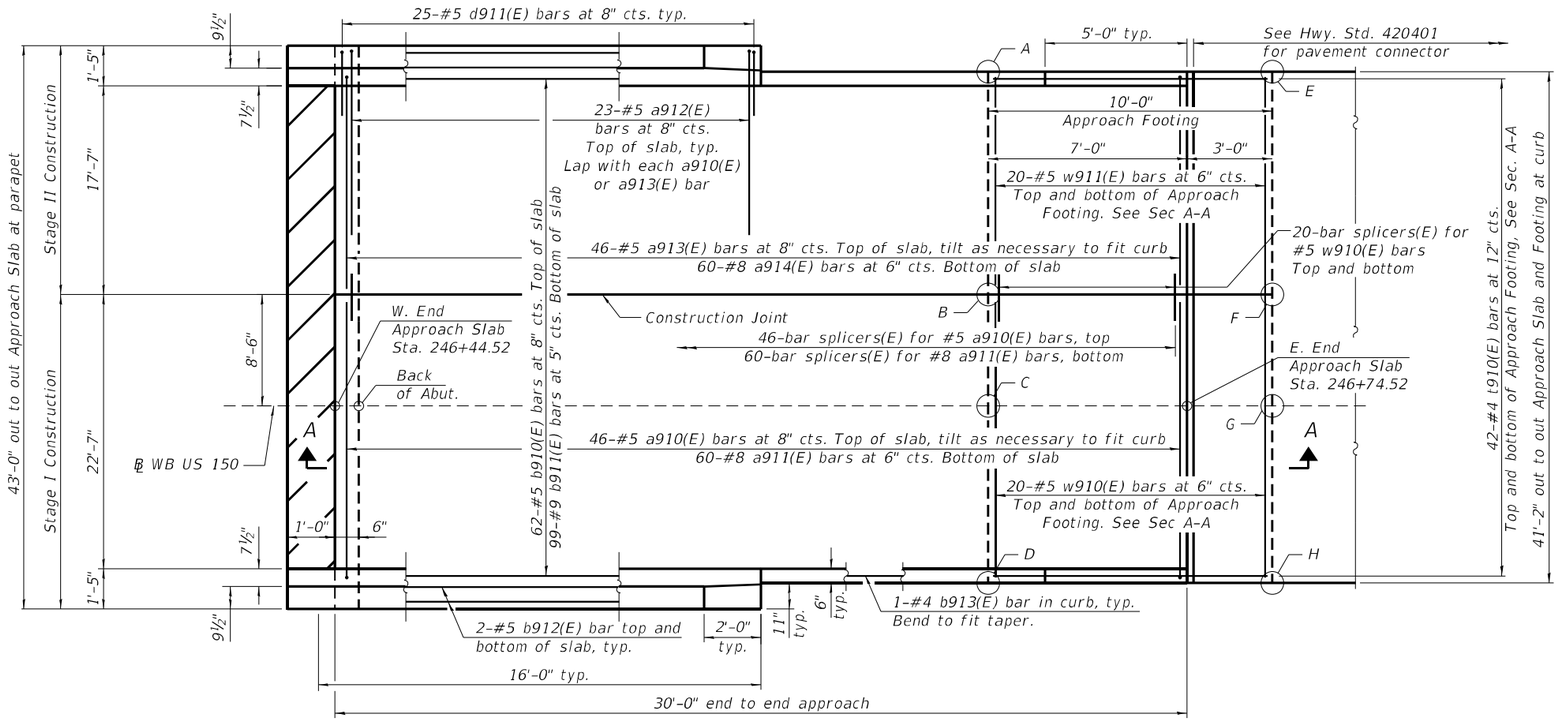

TOP AND BOTTOM ELEVATIONS FOR APPROACH FOOTING

East Approach				
Point	Station	Offset	Top	Bottom
A	246+67.52	-26.58	468.59	467.75
B	246+67.52	-8.50	468.93	468.10
C	246+67.52	0.00	469.06	468.22
D	246+67.52	14.58	468.83	468.00
E	246+77.52	-26.58	468.38	467.55
F	246+77.52	-8.50	468.73	467.89
G	246+77.52	0.00	468.85	468.02
H	246+77.52	14.58	468.63	467.79

* Prior to grinding
** After grinding

PLAN - EAST BRIDGE APPROACH PLAN

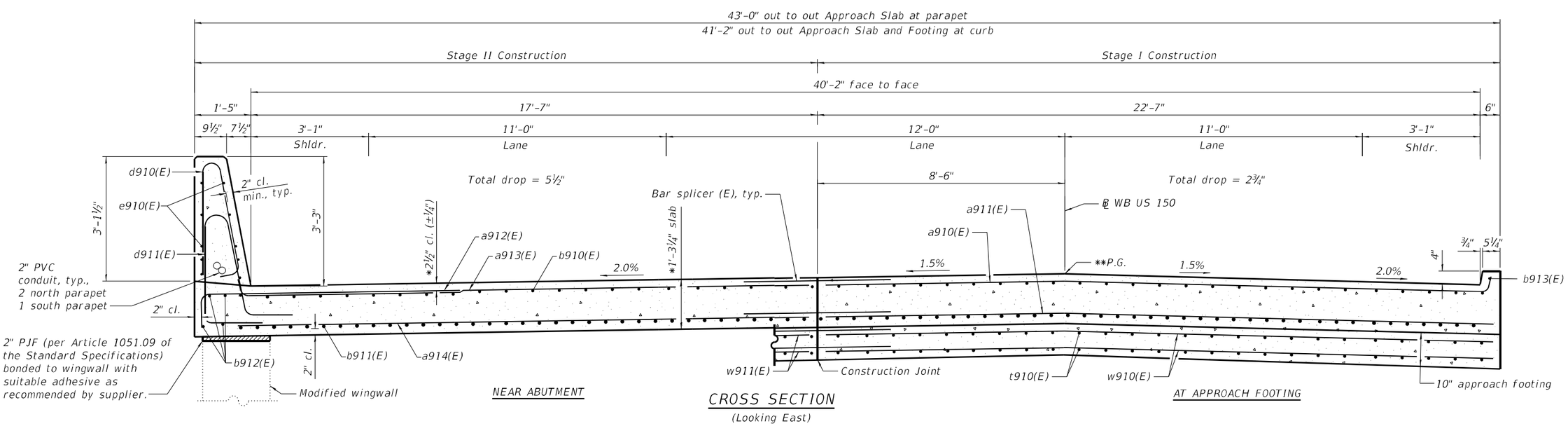

NEAR ABUTMENT

CROSS SECTION

(Looking East)

AT APPROACH FOOTING

MODEL: Default
FILE NAME: P:\4312-VBM\CLugageRehab\CADD\Structural_SN 090-0115_WBMainBridge_Final Plans\0900115-68E44-112-Sup-ApprSlabDtlsEAbut1.dgn

3/13/2025 12:50:28 PM

MODJESKI and MASTERS

USER NAME =	DESIGNED - YJ	REVISED -	
	CHECKED - YSS	REVISED -	
PLOT SCALE =	DRAWN - AEC	REVISED -	
PLOT DATE =	CHECKED - YSS	REVISED -	

STATE OF ILLINOIS
DEPARTMENT OF TRANSPORTATION

BRIDGE APPROACH SLAB DETAILS AT EAST ABUTMENT - 1
STRUCTURE NO. 090-0115

SHEET S112 OF S214 SHEETS

F.A.P. RTE.	SECTION	COUNTY	TOTAL SHEETS	SHEET NO.
317	(15B-1)BP,BRR	PEO/TAZ	418	282

CONTRACT NO. 68E44

ILLINOIS | FED. AID PROJECT

Notes:

The joint opening shall be adjusted for temperature per Article 520.04 of the Standard Specifications.

Removal of the existing bridge approach slab and parapet shall be included with Removal of Existing Concrete Deck No. 2.

Removal of the existing approach footing shall be paid for as Concrete Removal.

Parapet concrete shall be paid for as Concrete Superstructure.

Approach slab shall be paid for as Concrete Superstructure (Approach Slab).

Approach footing concrete shall be paid for as Concrete Structures.

The approach footing maximum applied service bearing pressure (Qmax) = 2.0 ksf.

Cost of excavation for approach footing included with Concrete Structures.

Cost of preformed joint filler and adhesive included with Concrete Superstructure (Approach Slab).

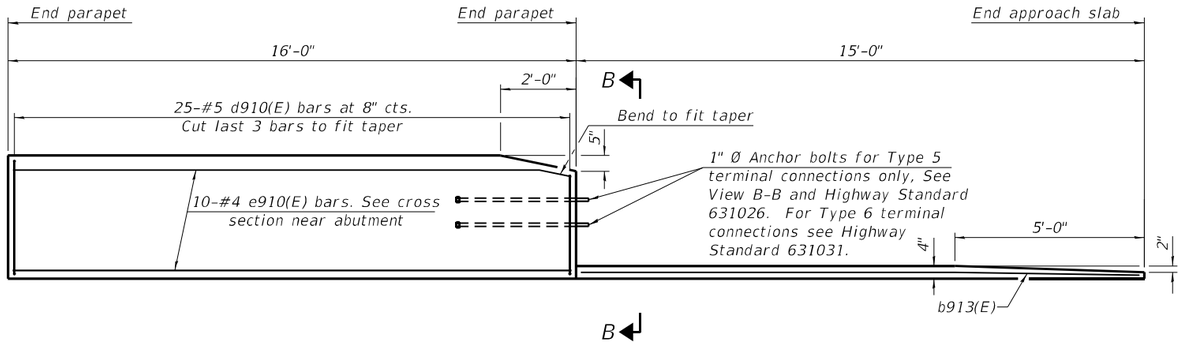

INSIDE ELEVATION OF PARAPET AND CURB

North parapet/curb shown, south parapet/curb opposite hand.

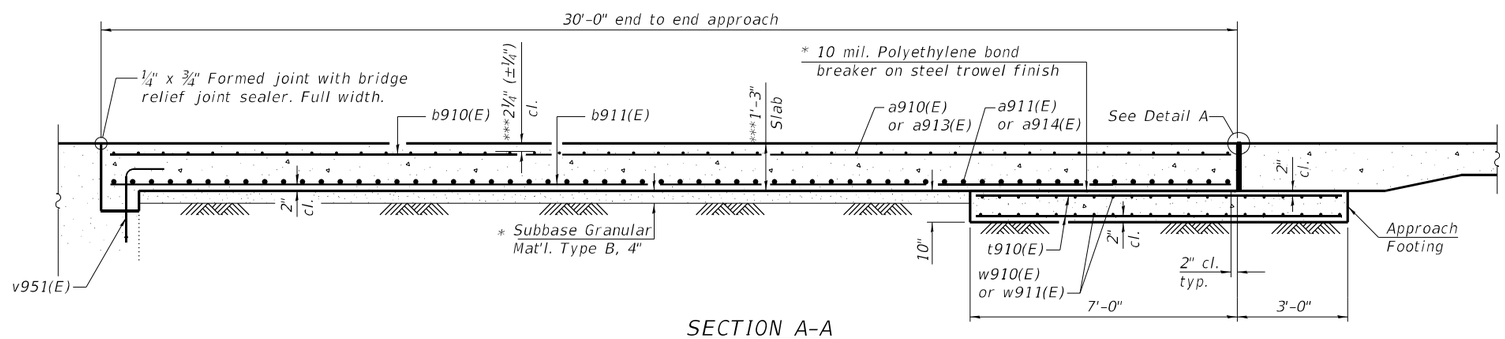

SECTION A-A

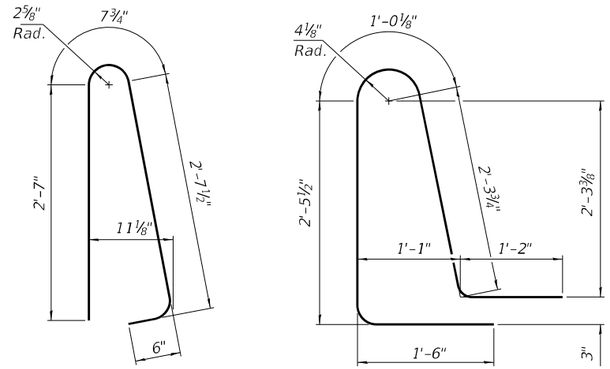

BAR d910(E)

BAR d911(E)

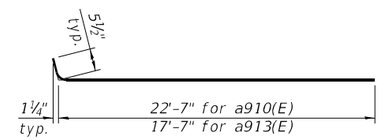

BARS a910(E) and a913(E)

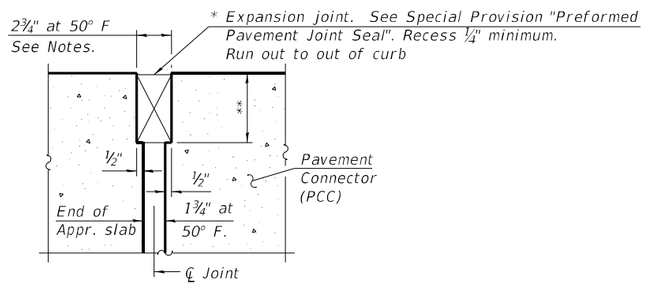

DETAIL A

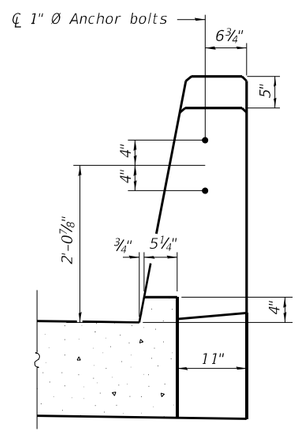

VIEW B-B

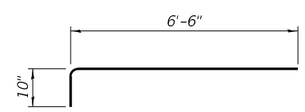

BAR a912(E)

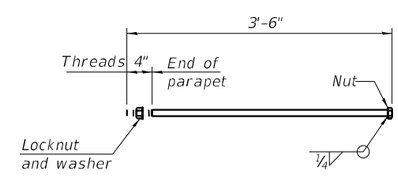

*1" Ø ANCHOR BOLT

(Anchor bolt assemblies shall be galvanized according to Article 1006.09 of the Standard Specifications)

EAST APPROACH BILL OF MATERIAL

Bar	No.	Size	Length	Shape
a910(E)	46	#5	23'-1"	
a911(E)	60	#8	22'-10"	
a912(E)	46	#5	7'-4"	
a913(E)	46	#5	18'-1"	
a914(E)	60	#8	17'-9"	
b910(E)	62	#5	29'-8"	
b911(E)	99	#9	29'-8"	
b912(E)	8	#5	14'-8"	
b913(E)	2	#4	14'-8"	
d910(E)	50	#5	6'-5"	
d911(E)	50	#5	8'-6"	
e910(E)	20	#4	15'-8"	
t910(E)	42	#4	9'-8"	
w910(E)	40	#5	22'-10"	
w911(E)	40	#5	17'-10"	
Concrete Removal			Cu. Yd.	8.0
Concrete Superstructure			Cu. Yd.	4.3
Concrete Superstructure (Approach Slab)			Cu. Yd.	60.8
Concrete Structures			Cu. Yd.	12.8
Protective Coat			Sq. Yd.	160
Reinforcement Bars, Epoxy Coated			Pound	23,840

* Cost included with Concrete Superstructure (Approach Slab).

** Per manufacturer recommendations

*** After grinding

MODEL: Default
FILE NAME: P:\4312-WBM\CLigageRehab\CADD\Structural_SN 090-0115_WBMainBridge_Final Plans\09001 15-68E44-113-Sup-ApprSlabDtlsEAbut2.dgn

3/13/2025 12:50:31 PM

MODJESKI and MASTERS

USER NAME =	DESIGNED - YJ	REVISED -	
	CHECKED - YSS	REVISED -	
PLOT SCALE =	DRAWN - AEC	REVISED -	
PLOT DATE =	CHECKED - YSS	REVISED -	

STATE OF ILLINOIS
DEPARTMENT OF TRANSPORTATION

BRIDGE APPROACH SLAB DETAILS AT EAST ABUTMENT - 2
STRUCTURE NO. 090-0115

SHEET S113 OF S214 SHEETS

F.A.P. RTE.	SECTION	COUNTY	TOTAL SHEETS	SHEET NO.
317	(15B-1)BP,BRR	PEO/TAZ	418	283

CONTRACT NO. 68E44

ILLINOIS | FED. AID PROJECT

DRAINAGE SCUPPER STATIONS
NORTH CURB

201+92.27 *	203+87.27 *
202+07.27 *	204+17.27 *
202+22.27 *	204+32.27 *
202+37.27 *	204+47.27 *
202+52.27 *	204+62.27 *
202+67.27 *	204+77.27 *
202+82.27 *	204+92.27 *
202+97.27 *	205+07.27 *
203+12.27 *	205+22.27 *
203+27.27 *	205+37.27 *
203+42.27 *	205+52.27 *
203+57.27 *	205+67.27 *
203+72.27 *	

DRAINAGE SCUPPER STATIONS
NORTH PARAPET

199+40.00	207+83.89 *	221+22.00
200+50.00	207+97.74 *	221+53.00
200+97.00	208+11.59 *	221+81.00
201+75.00	208+25.44 *	222+09.00
202+03.00	208+35.44 *	222+37.00
202+18.00 *	208+45.44 *	222+55.00
202+31.52 *	208+55.44 *	222+71.00
202+43.02 *	208+81.60	222+99.00
202+54.52 *	208+95.57 *	223+17.00
202+66.02 *	209+09.54 *	223+35.00
202+77.52 *	209+23.51 *	223+63.00
202+89.02 *	209+37.48 *	223+91.00
203+00.52 *	209+51.45 *	224+19.00
203+12.02 *	209+65.42 *	224+50.00
203+23.52 *	209+79.39 *	224+82.00
203+35.02 *	209+93.36 *	225+27.00
203+46.52 *	210+07.33 *	225+82.00
203+58.02 *	210+21.30 *	226+40.00
203+72.52 *	210+35.27 *	227+01.00
203+86.81 *	210+45.27 *	227+57.00
204+11.73 *	210+55.27 *	228+17.00
204+24.73 *	210+65.27 *	228+73.00
204+36.48 *	210+90.27 *	229+31.00
204+48.23 *	211+04.24 *	229+87.00
204+59.98 *	211+18.22 *	230+38.00
204+71.73 *	211+32.20 *	231+04.00
204+83.48 *	211+46.17 *	231+70.00
204+95.23 *	211+60.15 *	232+36.00
205+06.98 *	211+74.12 *	233+02.00
205+18.85 *	211+88.10 *	233+69.00
205+30.73 *	212+02.07 *	234+36.00
205+42.60 *	212+16.05 *	235+03.00
205+54.48 *	212+30.02 *	235+70.00
205+66.35 *	212+44.00 *	236+36.00
205+78.23 *	212+59.00	237+02.00
205+90.10 *	212+94.00	237+68.00
206+01.98 *	213+39.00	238+34.00
206+13.85 *	213+94.00	239+00.00
206+23.85 *	214+64.00	239+67.00
206+33.85 *	215+34.00	240+34.00
206+45.85 *	215+84.00	241+01.00
206+60.41 ****	216+41.00	241+67.00
206+72.41 **	216+99.00	242+33.00
206+84.35 **	217+55.00	242+99.00
206+99.53 *	218+15.00	243+65.00
207+14.53 *	218+71.00	244+31.00
207+28.50 *	219+32.00	244+97.00
207+42.35 *	219+89.00	245+64.00
207+56.20 *	220+45.00	246+31.00
207+70.05 *	220+90.00	

DRAINAGE SCUPPER STATIONS
SOUTH PARAPET

199+40.00	207+00.81 *	212+59.00
200+99.00	207+14.66 *	213+24.00
201+37.00	207+28.50 *	214+09.00
201+75.00	207+42.35 *	215+34.00
202+03.00 ***	207+56.20 *	216+41.00
202+18.00 *	207+70.05 *	217+55.00
202+31.88 *	207+83.89 *	218+71.00
202+45.76 *	207+97.74 *	219+32.00
202+59.64 *	208+11.59 *	219+89.00
202+73.52 *	208+25.44 *	220+66.00
202+87.41 *	208+35.44 *	221+22.00
203+01.29 *	208+45.44 *	221+81.00
203+15.17 *	208+55.44 *	222+37.00
203+29.05 *	208+81.60	222+71.00
203+42.93 *	208+95.57 *	222+99.00
203+56.81 *	209+09.54 *	223+35.00
203+66.81 *	209+23.51 *	223+91.00
203+76.81 *	209+37.48 *	224+50.00
203+86.81 *	209+51.45 *	225+06.00
204+11.73 *	209+65.42 *	225+82.00
204+21.73 *	209+79.39 *	226+40.00
204+31.73 *	209+93.36 *	227+01.00
204+41.73 *	210+07.33 *	228+17.00
204+56.23 *	210+21.30 *	229+31.00
204+70.73 *	210+35.27 *	230+38.00
204+85.24 *	210+45.27 *	231+44.00
204+99.74 *	210+55.27 *	232+50.00
205+14.24 *	210+65.27 *	233+56.00
205+28.74 *	210+90.27 *	234+63.00
205+43.25 *	211+04.24 *	235+70.00
205+57.75 *	211+18.22 *	236+76.00
205+72.25 *	211+32.20 *	237+82.00
205+86.75 *	211+46.17 *	238+88.00
206+01.26 *	211+60.15 *	239+94.00
206+15.76 *	211+74.12 *	241+01.00
206+30.26 *	211+88.10 *	242+07.00
206+44.77 *	212+02.07 *	243+13.00
206+59.27 ***	212+16.05 *	244+19.00
206+73.12 *	212+30.02 *	245+25.00
206+86.96 *	212+44.00 *	246+31.00

* Floor Drain
** DS-33 Scupper
*** DS-11 recessed into parapet 3½"
**** DS-11 offset max 4" from parapet towards ℄ roadway

Note:
Drainage scuppers are DS-11 unless other noted.

MODEL: Default
FILE NAME: P:\4312-VBM\CLugageRehab\CADD\Structural_SN 090-0115_WBMainBridge_Final Plans\0900115-68E44-114-Sup-DrnScupperLoc.dgn

MODJESKI and MASTERS

USER NAME =	DESIGNED - UB	REVISED -	
	CHECKED - YSS	REVISED -	
PLOT SCALE =	DRAWN - AEC	REVISED -	
PLOT DATE =	CHECKED - YSS	REVISED -	

STATE OF ILLINOIS
DEPARTMENT OF TRANSPORTATION

DRAINAGE SCUPPER STATIONS
STRUCTURE NO. 090-0115

SHEET S114 OF S214 SHEETS

F.A.P. RTE.	SECTION	COUNTY	TOTAL SHEETS	SHEET NO.
317	(15B-1)BP,BRR	PEO/TAZ	418	284
		CONTRACT NO. 68E44		
	ILLINOIS	FED. AID PROJECT		

3/13/2025 12:50:34 PM

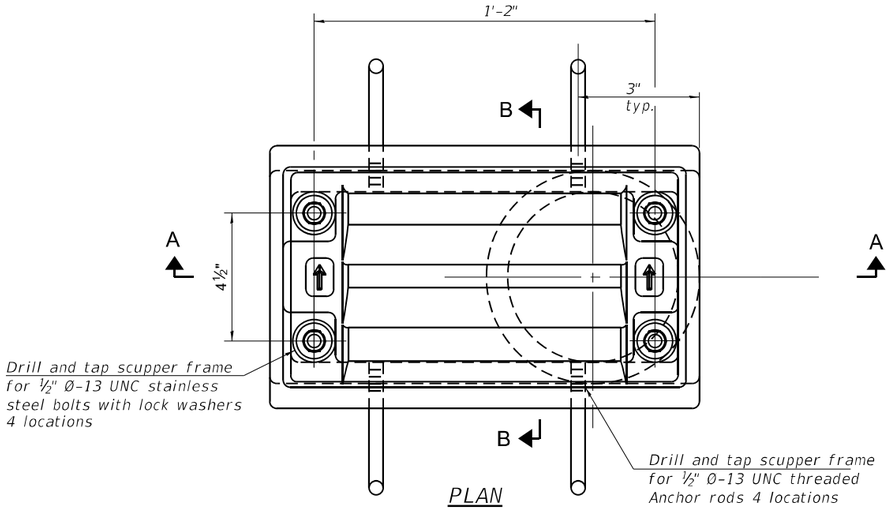

PLAN

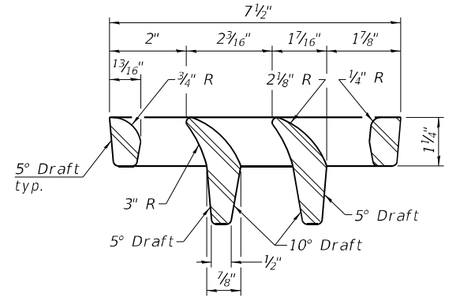

VANE GRATE DETAIL

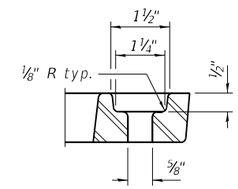

GRATE BOLT HOLE DETAIL

Notes:

All cast iron parts shall be gray iron conforming to the requirements of AASHTO M105, Class 35B and AASHTO M306.

Bolts, anchor rods, nuts and washers shall be according to ASTM A307 and shall be galvanized according to AASHTO M232. As an alternate stainless steel may be used.

Stainless steel hardware shall be according to Article 1006.29(d) of the Standard Specifications.

Structural steel weldments of equal sections and of the same configuration may be substituted for the cast iron scupper frames and downspouts; however, the scupper grates shall remain cast iron. Fillet or full penetration welds shall be used for the weldments. Details shall be submitted to the Engineer for approval.

Structural steel scupper frames and downspouts, when utilized, shall be galvanized according to AASHTO M111.

As an alternate, fiberglass may be used for downspouts according to ASTM D2996 with a short-time rupture strength hoop tensile stress of 30,000 psi min. in lieu of the cast iron or structural steel.

Exterior surfaces of downspouts and exterior exposed surfaces of the scupper frame below deck shall be treated as specified on sheet S3 of S214.

The Contractor shall take appropriate measures to assure that Protective Coat is not applied to the scupper.

Cost of the grate, frame, downspout, anchor rods, nuts and washers including complete installation of the scupper shall be paid for at the contract unit price for Drainage Scuppers, DS-11.

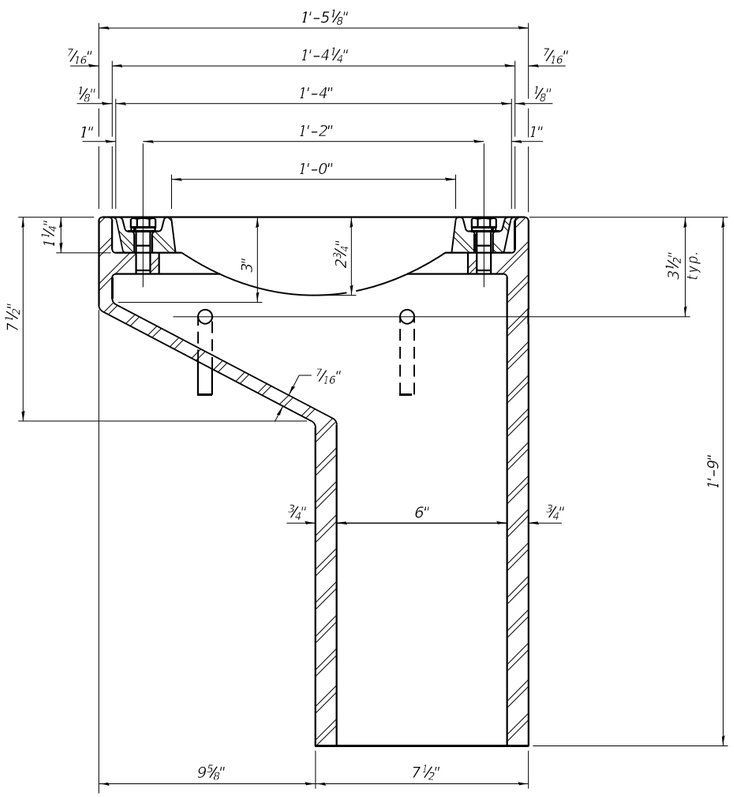

SECTION A-A

See sheet S77 of S214 for scupper location relative to parapet.

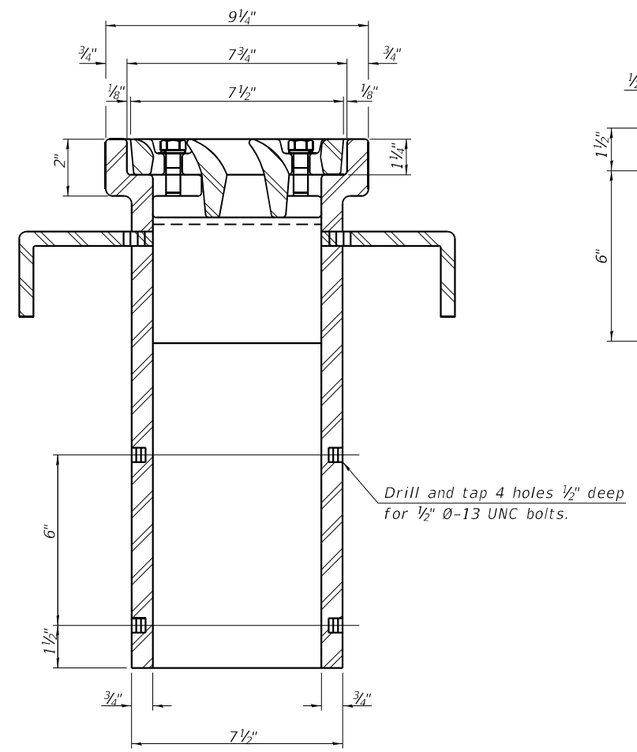

SECTION B-B

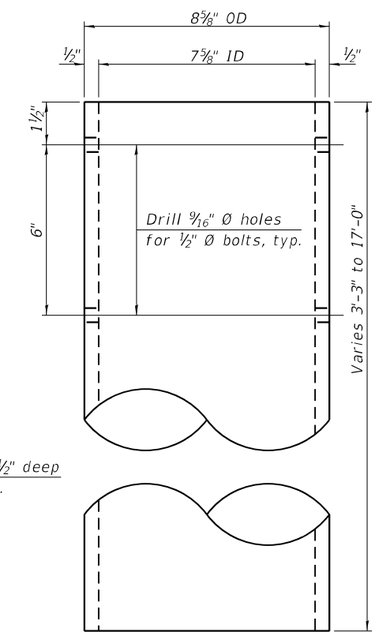

DOWNSPOUT

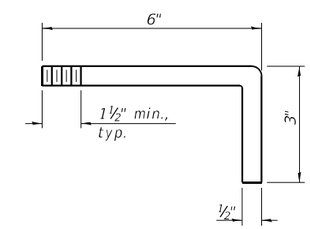

ANCHOR ROD DETAIL

BILL OF MATERIAL

ITEM	UNIT	QUANTITY
Drainage Scuppers, DS-11	Each	119

DS-11 5-15-2023

MODEL: Default
FILE NAME: P:\4312-VBM-CL\BugageRehab\CADD\Structural_SN 090-0115_WBMainBridge_Final Plans\0900115-68E44-115-DrainageScupper-DS11.dgn

3/13/2025 12:50:37 PM

MODJESKI and MASTERS

USER NAME =	DESIGNED - UB	REVISED -	
	CHECKED - YSS	REVISED -	
PLOT SCALE =	DRAWN - AEC	REVISED -	
PLOT DATE =	CHECKED - UB	REVISED -	

STATE OF ILLINOIS
DEPARTMENT OF TRANSPORTATION

DRAINAGE SCUPPERS, DS-11
STRUCTURE NO. 090-0115

SHEET S115 OF S214 SHEETS

F.A.P. RTE.	SECTION	COUNTY	TOTAL SHEETS	SHEET NO.
317	(15B-1)BP,BRR	PEO/TAZ	418	285

CONTRACT NO. 68E44

ILLINOIS FED. AID PROJECT

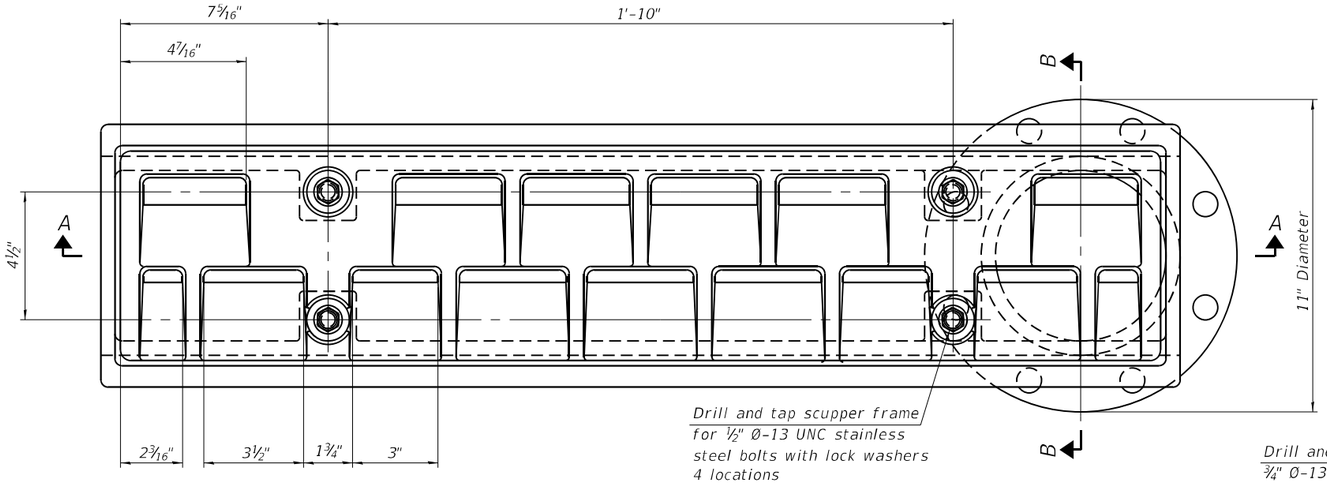

PLAN

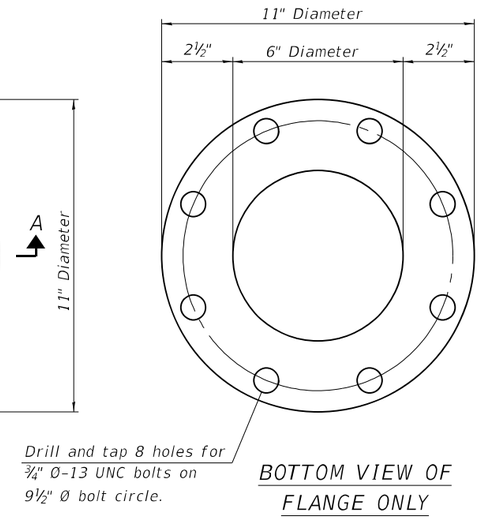

BOTTOM VIEW OF FLANGE ONLY

Notes:

All cast iron parts shall be gray iron conforming to the requirements of AASHTO M105, Class 35B and AASHTO M306.

Bolts, nuts and washers shall be according to ASTM A307 and shall be galvanized according to AASHTO M232. As an alternate stainless steel may be used.

Stainless steel hardware shall be according to Article 1006.29(d) of the Standard Specifications.

Structural steel weldments of equal sections and of the same configuration may be substituted for the cast iron scupper frames and downspouts; however, the scupper grates shall remain cast iron. Fillet or full penetration welds shall be used for the weldments. Details shall be submitted to the Engineer for approval.

Structural steel scupper frames and downspouts, when utilized, shall be galvanized according to AASHTO M111.

As an alternate, fiberglass may be used for downspouts according to ASTM D2996 with a short-time rupture strength hoop tensile stress of 30,000 psi min. in lieu of the cast iron or structural steel.

Exterior surfaces of downspouts and exterior exposed surfaces of the scupper frame below deck shall be treated as specified on sheet S3 of S214.

The Contractor shall take appropriate measures to assure that Protective Coat is not applied to the scupper.

Cost of the grate, frame, downspout, nuts and washers including complete installation of the scupper shall be paid for at the contract unit price for Drainage Scuppers, DS-33.

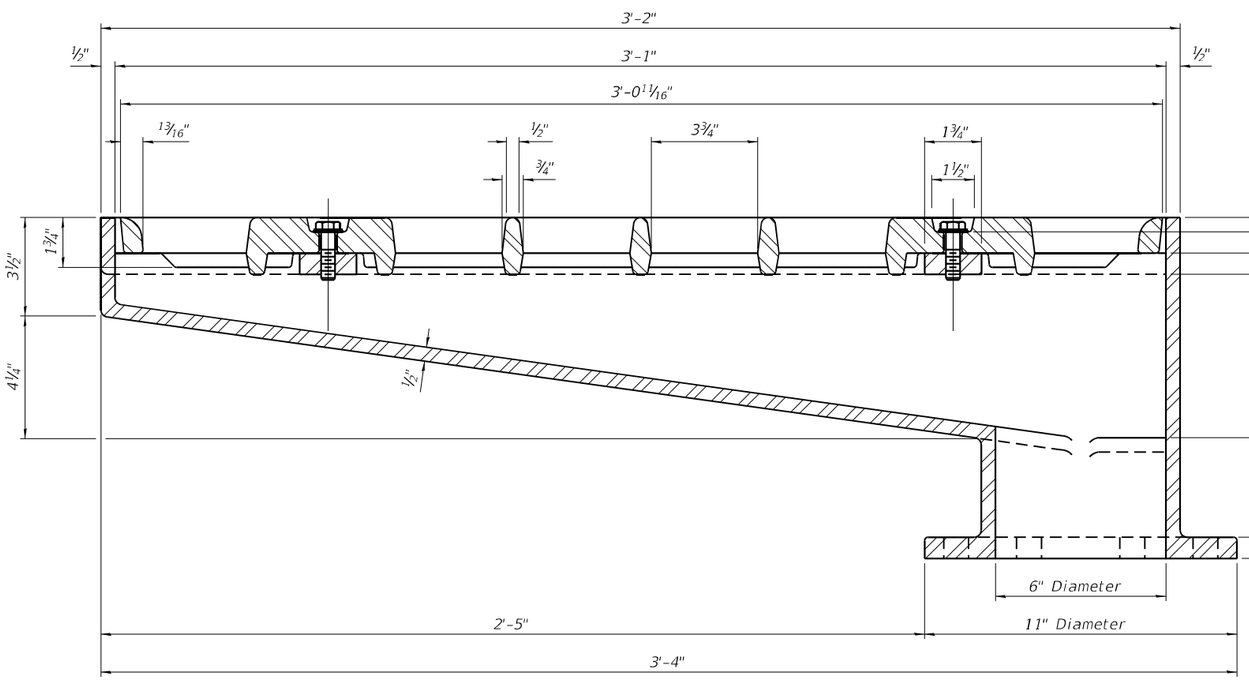

SECTION A-A

See sheet S77 of S214 for scupper location relative to parapet.

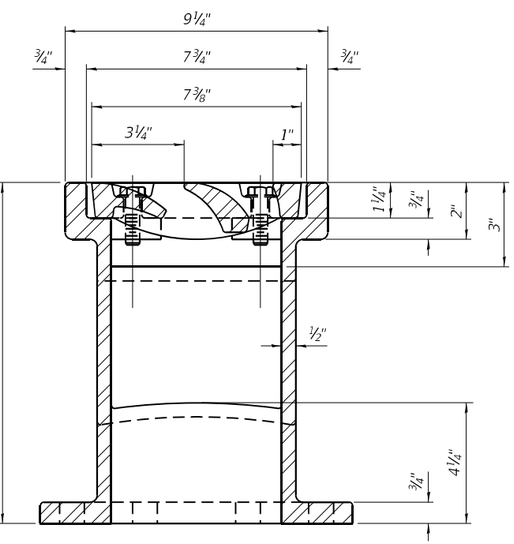

SECTION B-B

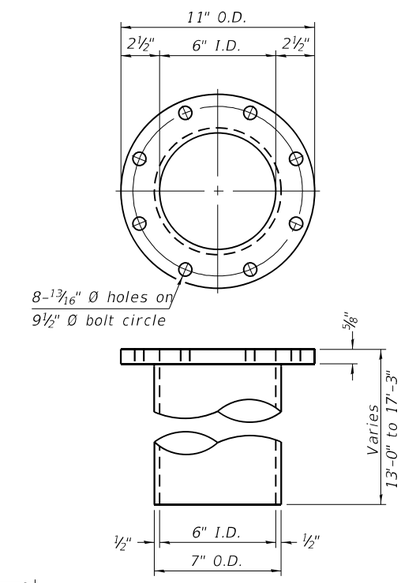

DOWNSPOUT

BILL OF MATERIAL

ITEM	UNIT	QUANTITY
Drainage Scuppers, DS-33	Each	2

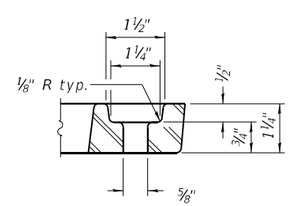

GRATE BOLT HOLE DETAIL

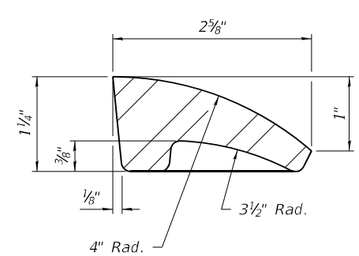

FIRST VANE DETAIL

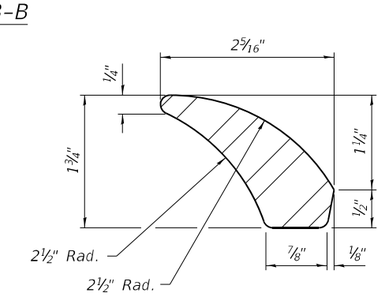

SECOND VANE DETAIL

DS-33 5-15-2023

MODJESKI and MASTERS

USER NAME =	DESIGNED - UB	REVISED -
	CHECKED - YSS	REVISED -
PLOT SCALE =	DRAWN - AEC	REVISED -
PLOT DATE =	CHECKED - UB	REVISED -

STATE OF ILLINOIS
DEPARTMENT OF TRANSPORTATION

DRAINAGE SCUPPERS, DS-33
STRUCTURE NO. 090-0115

SHEET S116 OF S214 SHEETS

F.A.P. RTE.	SECTION	COUNTY	TOTAL SHEETS	SHEET NO.
317	(15B-1)BP,BRR	PEO/TAZ	418	286

CONTRACT NO. 68E44

ILLINOIS FED. AID PROJECT

MODEL: Default
FILE NAME: P:\4312-WBMcCLugageRehab\CADD\Structural_SN 090-0115_WBMainBridge_Final Plans\0900115-68E44-116-DrainageScupper-DS33.dgn

3/13/2025 12:50:39 PM

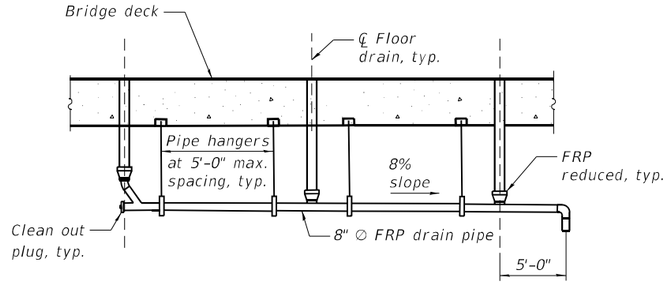

VIEW A-A

Drainage system at south parapet shown, north parapet and north curb similar.

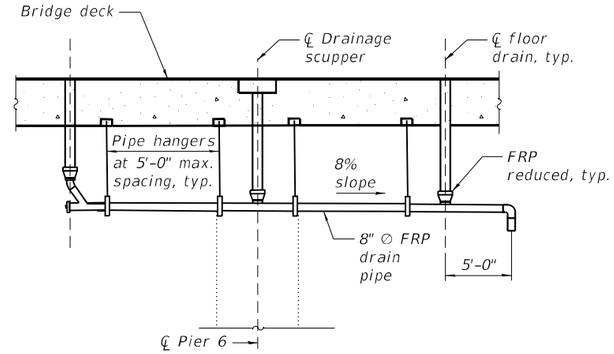

VIEW B-B

Drainage system at south parapet shown, north parapet similiar.

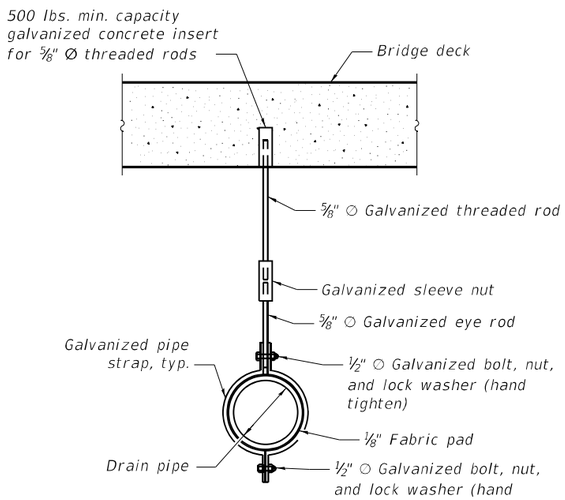

PIPE HANGER DETAIL

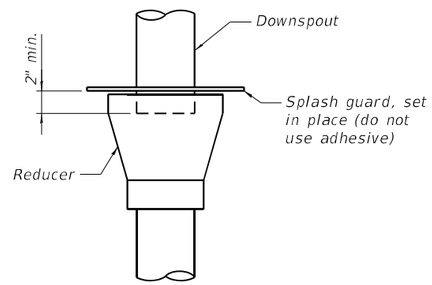

FRP REDUCER DETAIL

TABLE OF DRAINAGE SYSTEM REPAIRS

2024 NBIS Inspection Deficiency Item No.	Location	Action
106	North end of Pier 4 South end of Pier 4 North end of Pier 10 North end of Pier 13 North end of Pier 16 North end of Pier 19	Clean clogged existing downspout. See Cleaning Drainage System special provision

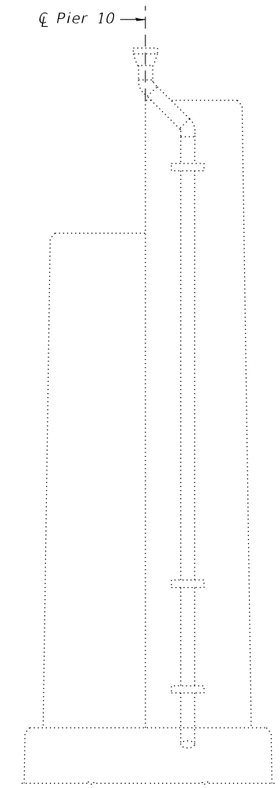

DRAINAGE SYSTEM REPAIR

Pier 10 shown, other locations similar

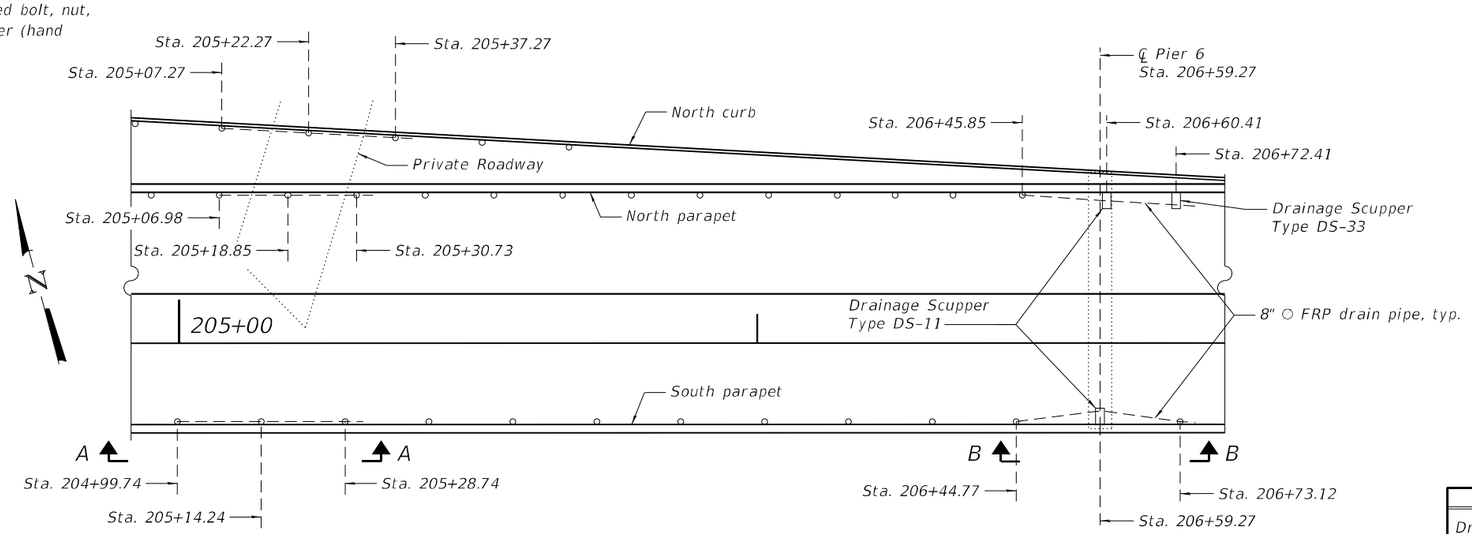

DRAINAGE PLAN

Notes:

Threaded rods shall conform to the requirements of ASTM F1554 Grade 36.

Bolts, washers and nuts shall conform to the requirements of ASTM A307 and shall be galvanized according to AASHTO M232.

The cost for all work required to furnish, fabricate and install the closed drainage systems that are located at Pier 6 and over the private roadway in Span 7 including the pipes, reducers, cleanouts, fittings, and hardware, shall be paid for at the lump sum contract price for Drainage System for Structures.

See sheets S115 and S116 of S214 for drainage scupper details.

BILL OF MATERIAL

Item	Unit	Total
Drainage System for Structures	L. Sum	1
Cleaning Drainage System	L. Sum	1

MODEL: Default
FILE NAME: P:\4312-WBMcCLigageRehab\CADD\Structural_SN 090-0115_WBMainBridge_Final Plans\0900115-68E44-117-ClosedDrnSys.dgn

3/13/2025 12:50:42 PM

MODJESKI and MASTERS

USER NAME =	DESIGNED - JAD	REVISED -	
	CHECKED - YSS	REVISED -	
PLOT SCALE =	DRAWN - AEC	REVISED -	
PLOT DATE =	CHECKED - YSS	REVISED -	

STATE OF ILLINOIS
DEPARTMENT OF TRANSPORTATION

CLOSED DRAINAGE SYSTEM
STRUCTURE NO. 090-0115

SHEET S117 OF S214 SHEETS

F.A.P. RTE.	SECTION	COUNTY	TOTAL SHEETS	SHEET NO.
317	(15B-1)BP,BRR	PEO/TAZ	418	287

CONTRACT NO. 68E44

ILLINOIS | FED. AID PROJECT

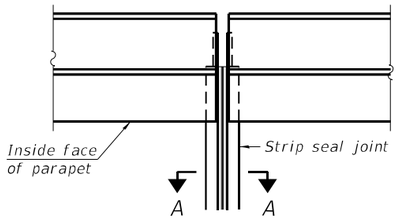

TYPICAL LOCATIONS

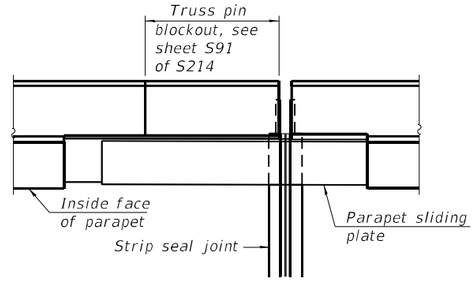

TRUSS EXPANSION JOINT AT
PANEL POINT L33

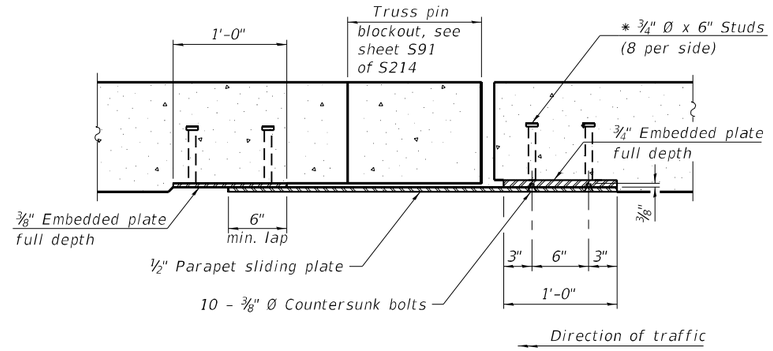

SECTION B-B

PLAN AT PARAPET

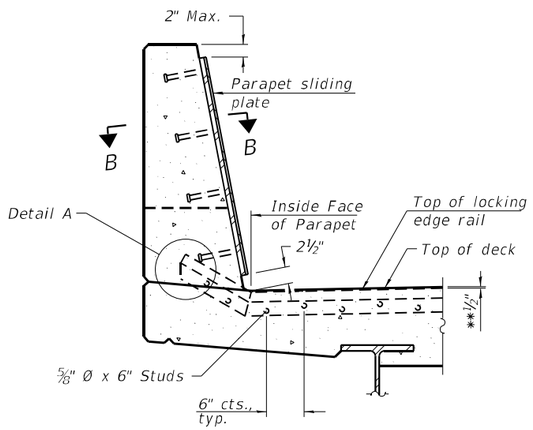

SECTION AT PARAPET

Truss expansion joint at Panel Point L33
shown. All other locations similar.

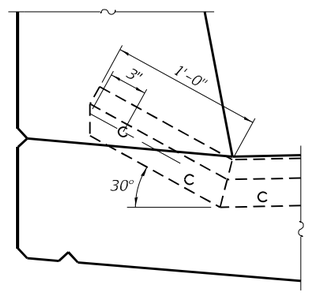

DETAIL A

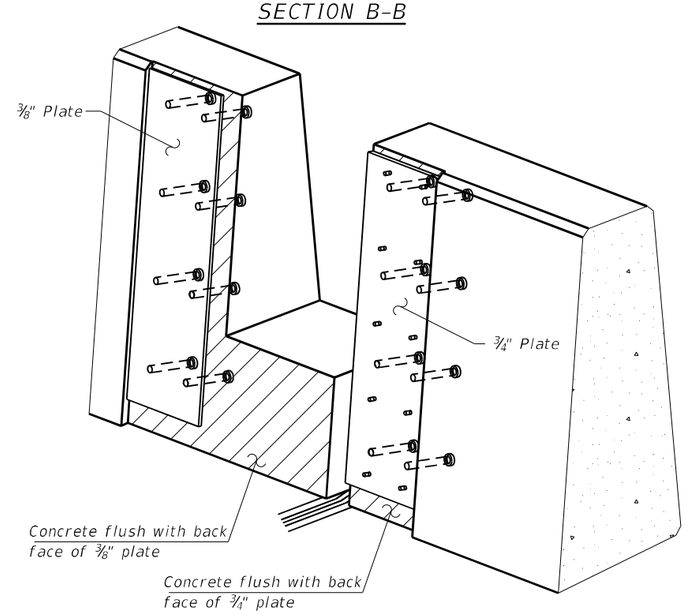

TRIMETRIC VIEW
(Showing embedded plates only)

Notes:

The strip seal shall be made continuous and shall have a minimum thickness of ¼". The configuration of the strip seal shall match the configuration of the locking edge rails. Open or "webbed" strip seal gland configurations are not permitted. The gland shall be sized for a maximum rated movement of 4 inches.

The locking edge rails depicted are configured for typical applications and are conceptual only. The actual configuration of the locking edge rails and matching strip seal may vary from manufacturer to manufacturer provided they fit the application and meet the minimum anchorage shown. Flanged edge rails, however, will not be allowed. Locking edge rails may exceed the 4½" maximum depth provided the anchorage system is revised according to the manufacturer's recommendation.

The manufacturer's recommended installation methods shall be followed.

All steel components shall be galvanized after fabrication according to Article 520.03 of the Standard Specifications.

The Maximum space between locking edge rail segments shall be 3/16" and sealed with a suitable sealant; however, any rail joint within 10' measured perpendicular to the face of the curb or parapet shall be welded as shown in the locking edge rail splice detail.

Cost of parapet sliding plates, embedded plates, and anchorage studs included with Preformed Joint Strip Seal.

The concrete opening below the strip seal will vary based on the locking edge rail chosen by the Contractor. Deck and parapet lengths shown elsewhere in the plans are dimensioned to the concrete opening, not the joint opening, and are based on the rolled locking edge rail. If the Contractor elects to use a different locking edge rail, dimensional adjustments may be required. One exception to this would be the strip seal joint at the end of the precast bridge approach slab. For these cases the pavement connector length shall be adjusted, not the length of the bridge approach slab.

Location	Dim. A	Dim. B
Pier 2	1⅝"	2½"
Truss relief joints	1⅛"	2"
Truss expansion joint at L33	1⅛"	2"
East Abutment	1⅝"	2½"

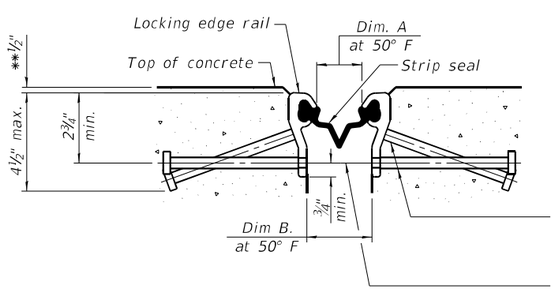

SHOWING ROLLED RAIL JOINT

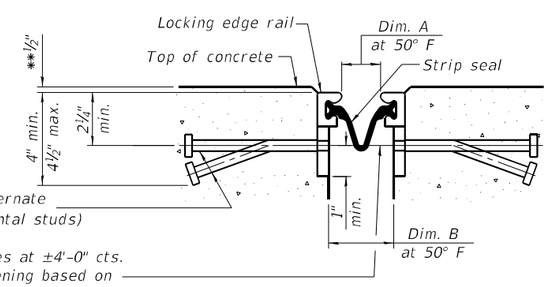

SHOWING WELDED RAIL JOINT

* ⅝" Ø x 6" studs @ 6" cts. (alternate angled/bent studs with horizontal studs)

¾" ϕ threaded rods in 7/16" ϕ holes at ±4'-0" cts. for holding the proper joint opening based on the temperature during the deck pour. Place to miss studs. All rods shall be burned, or sawed off flush with the plates after concrete is set.

SECTION A-A

* Granular or solid flux filled headed studs conforming to Article 1006.32 of the Std. Specs., automatically end welded.

** Prior to grinding

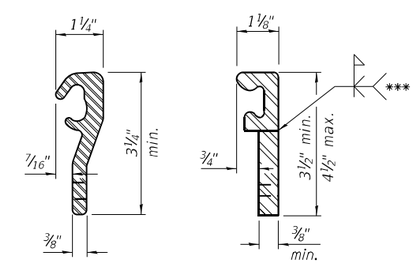

ROLLED
(EXTRUDED) RAIL

WELDED RAIL

LOCKING EDGE RAILS

*** Back gouge not required if complete joint penetration is verified by mock-up.

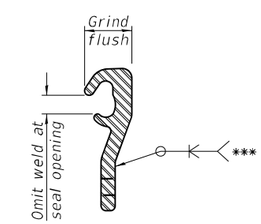

LOCKING EDGE RAIL SPLICE

The inside of the locking edge rail groove shall be free of weld residue. Rolled rail shown, welded rail similar.

BILL OF MATERIAL

Item	Unit	Total
Preformed Joint Strip Seal	Foot	504

MODJESKI and MASTERS

USER NAME =	DESIGNED - YJ	REVISED -	
	CHECKED - UB	REVISED -	
PLOT SCALE =	DRAWN - AEC	REVISED -	
PLOT DATE =	CHECKED - UB	REVISED -	

STATE OF ILLINOIS
DEPARTMENT OF TRANSPORTATION

PREFORMED JOINT STRIP SEAL
STRUCTURE NO. 090-0115

SHEET S118 OF S214 SHEETS

F.A.P. RTE.	SECTION	COUNTY	TOTAL SHEETS	SHEET NO.
317	(15B-1)BP,BRR	PEO/TAZ	418	288

CONTRACT NO. 68E44

ILLINOIS FED. AID PROJECT

MODEL: Default
FILE NAME: P:\4312-VBM-CLugageRehab\CADD\Structural_SN 090-0115_WBMainBridge_Final Plans\0900115-68E44-118-PreformedJtStripSeal.dgn
3/13/2025 12:50:46 PM

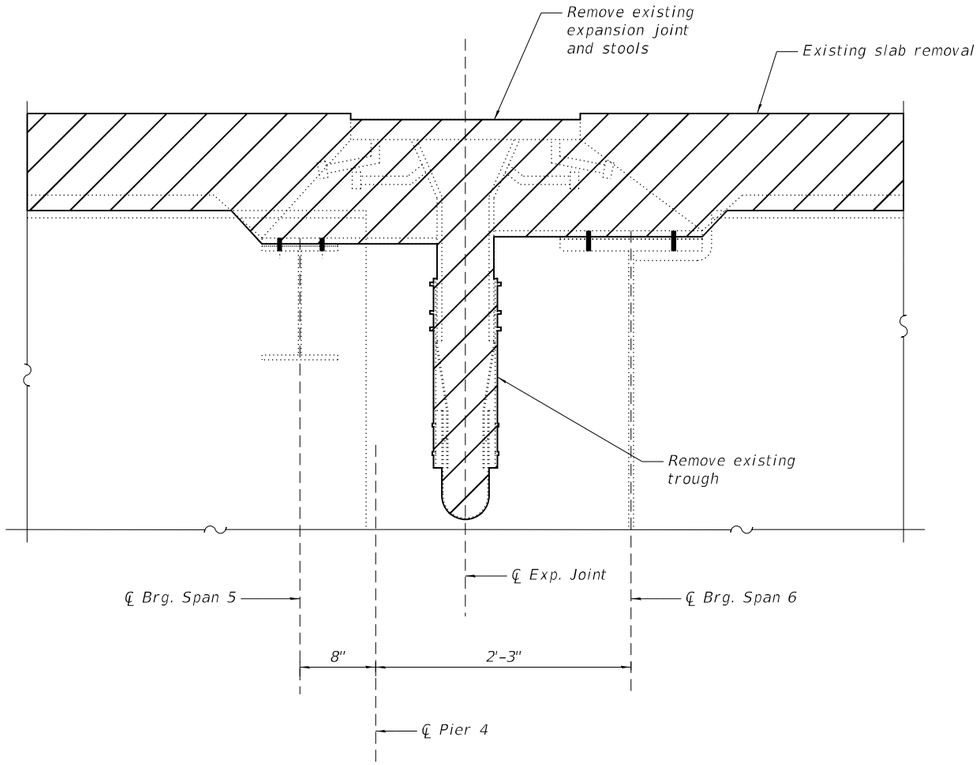

EXPANSION JOINT REMOVAL AT PIER 4

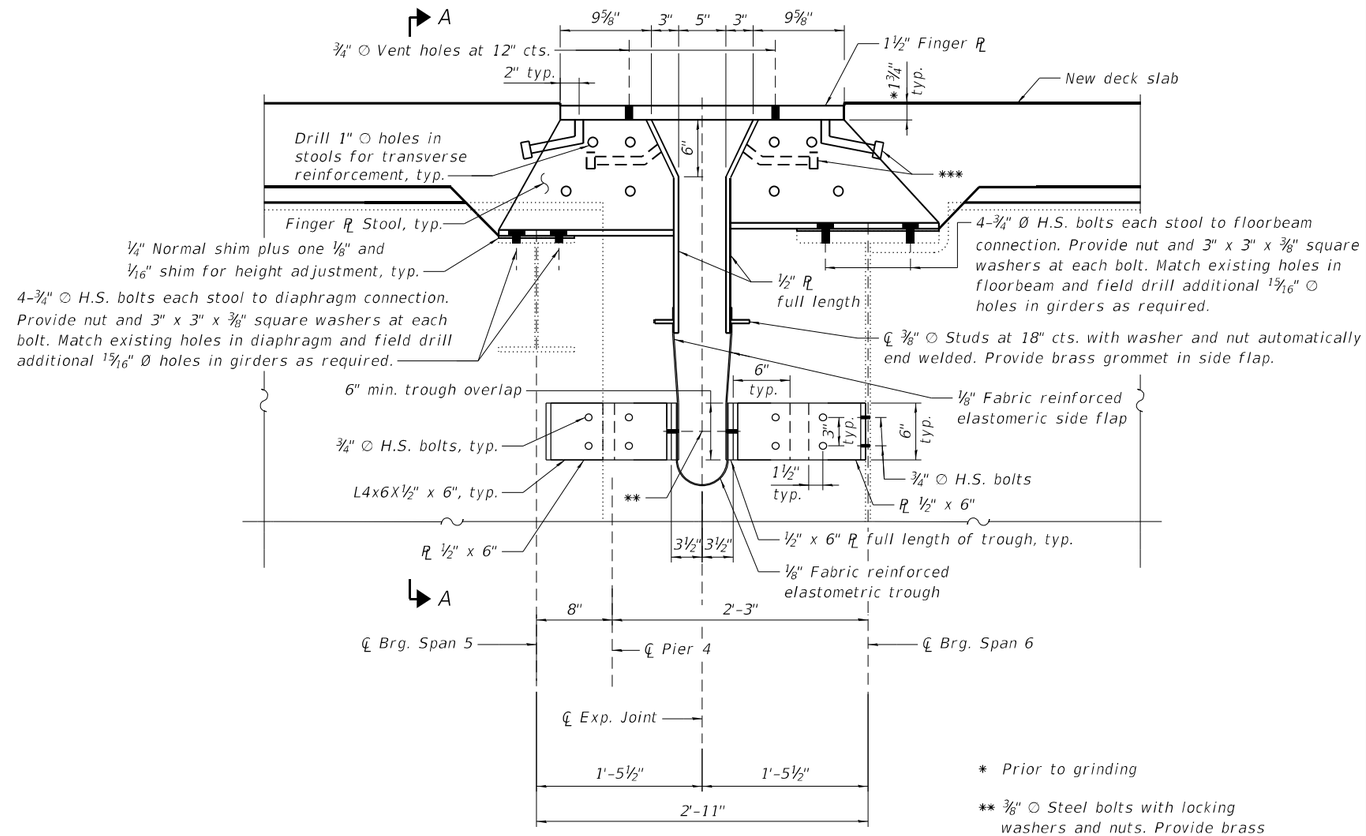

* Prior to grinding

** ⅜" ○ Steel bolts with locking washers and nuts. Provide brass grommet in trough.

*** ¾" ○ x 8" Granular or solid flux filled headed studs conforming to Art. 1006.32 of the Std Specifications.

EXPANSION JOINT REPLACEMENT AT PIER 4

Horizontal dimensions are at 50°F

Notes:

See sheet S121 of S214 for Section A-A.

Removal and disposal of the existing bracket and stools identified on the plans shall be in accordance with the special provisions Structural Steel Removal.

See sheet S120 of S214 for additional details and Bill of Material.

Joint openings shall be adjusted according to Article 520.04 of the Std. Specs, when the deck is poured at an ambient temperature other than 50° F.

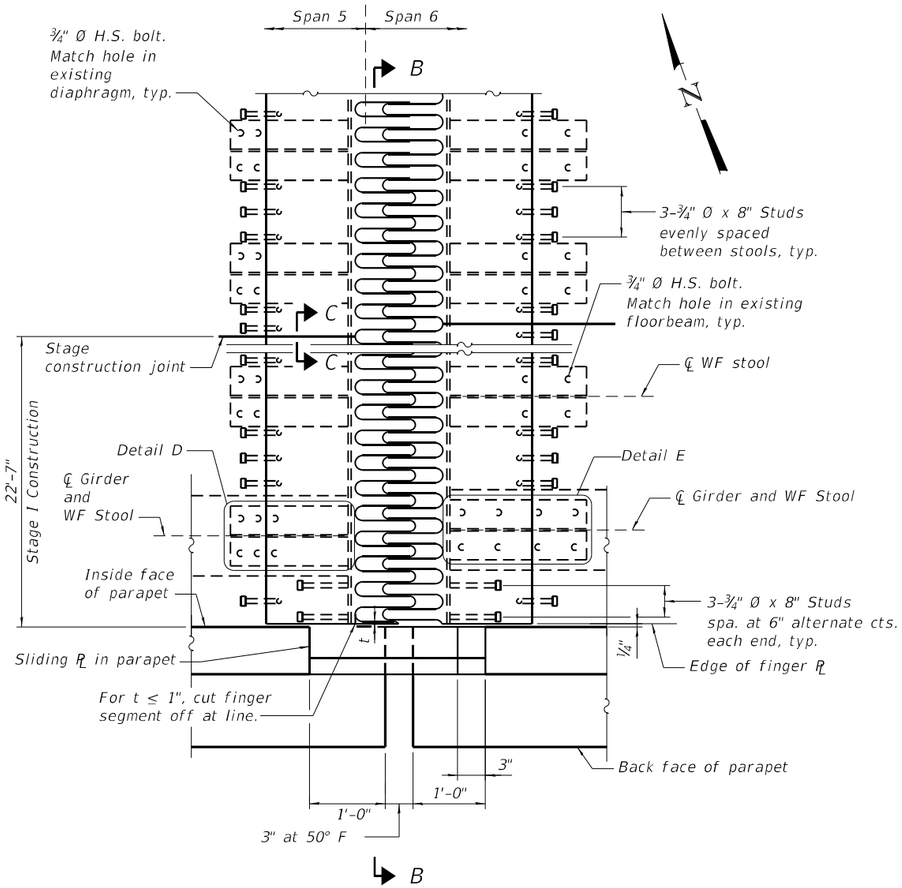

PLAN AT PIER 4

Floorbeam and diaphragm not shown for clarity.

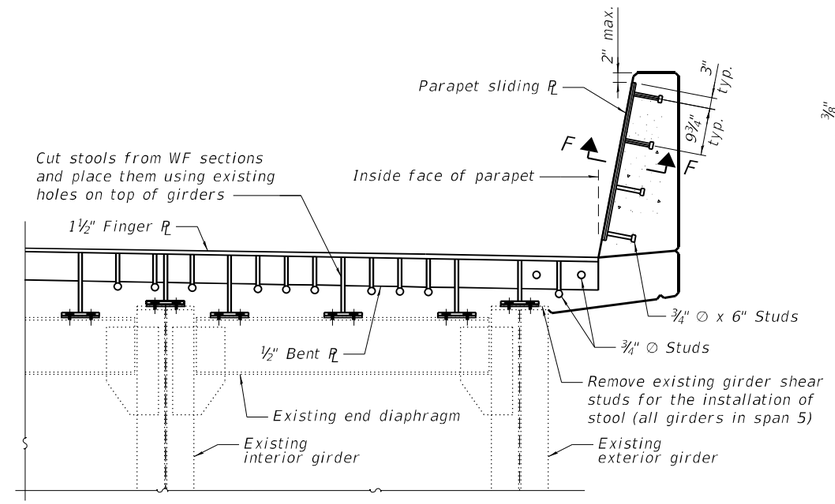

SECTION B-B

Span 5 shown, Span 6 similar

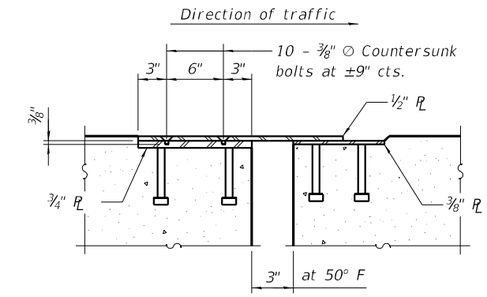

SECTION F-F

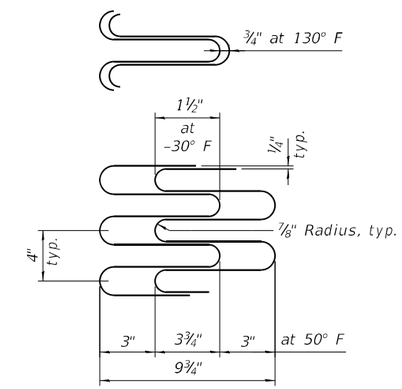

FINGER PLATE SETTING DIAGRAM

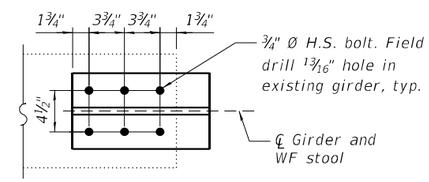

DETAIL D

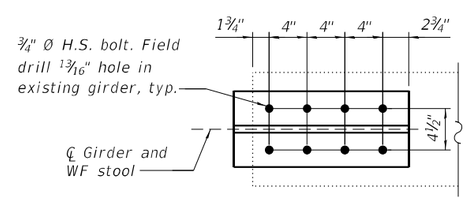

DETAIL E

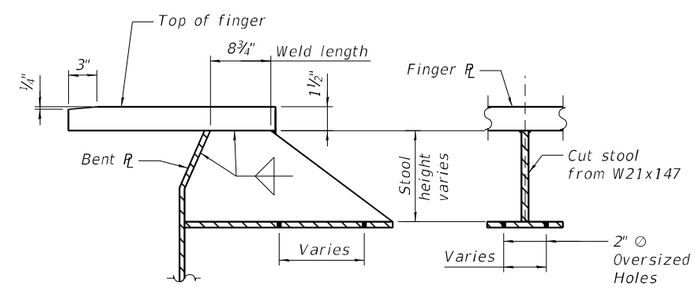

FINGER PLATE STOOL DETAIL

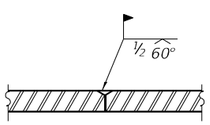

SECTION C-C

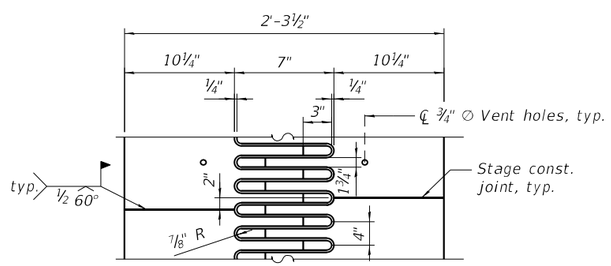

FLAME CUTTING DIAGRAM

Cut from PL 1½" x 2'-3½" x 43'-2"
(1 required)

BILL OF MATERIAL

Item	Unit	Total
Finger Plate Expansion Joint, 5"	Foot	43.5
Fabric Reinforced Elastomeric Trough	Foot	46

Notes:

Finger plate expansion joints shall be assembled in their final relative position with the ends in place for shop inspection and acceptance.

All steel components of the expansion joint shall be galvanized after fabrication according to Article 520.03 of the Standard Specifications.

MODJESKI and MASTERS

USER NAME =	DESIGNED - YJ	REVISED -	
	CHECKED - UB	REVISED -	
PLOT SCALE =	DRAWN - AEC	REVISED -	
PLOT DATE =	CHECKED - UB	REVISED -	

STATE OF ILLINOIS
DEPARTMENT OF TRANSPORTATION

FINGER PLATE EXPANSION JOINT AT PIER 4 - 2
STRUCTURE NO. 090-0115

SHEET S120 OF S214 SHEETS

F.A.P. RTE.	SECTION	COUNTY	TOTAL SHEETS	SHEET NO.
317	(15B-1)BP,BRR	PEO/TAZ	418	290

CONTRACT NO. 68E44

ILLINOIS FED. AID PROJECT

MODEL: Default
FILE NAME: P:\4312-WBMcCLugageRehab\CADD\Structural_SN 090-0115_WBMainBridge_Final Plans\0900115-68E44-120-fgrPIEXpltPier4-2.dgn

3/13/2025 12:50:52 PM

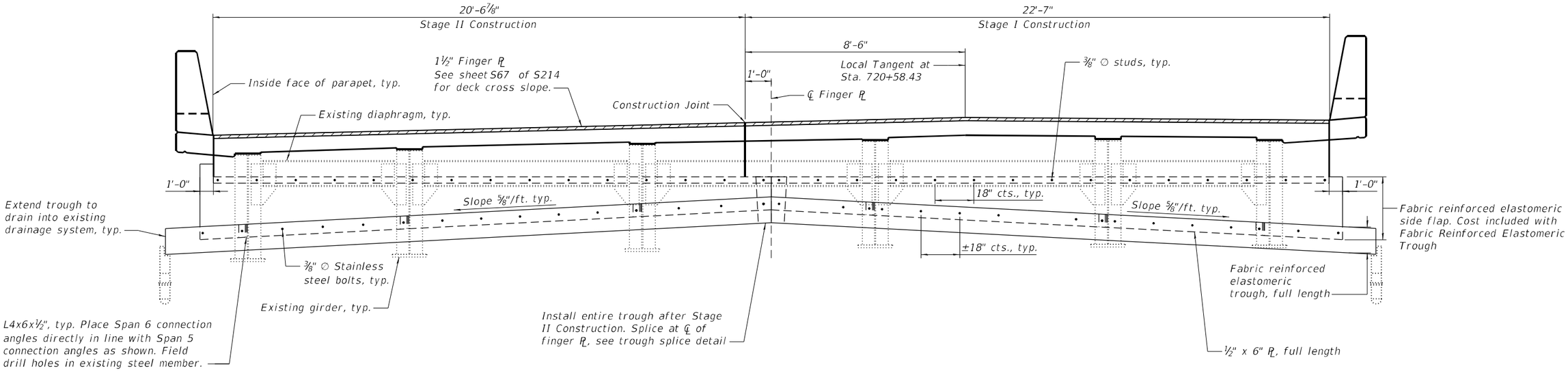

SECTION A-A

Span 5

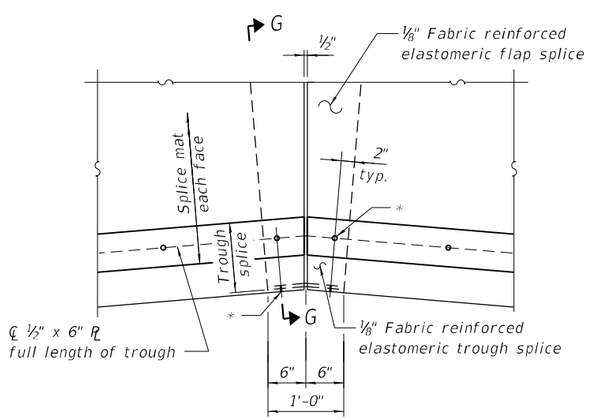

TROUGH SPLICE DETAIL

* ⅜" ∅ Stainless steel bolts with washers and nuts. Provide brass grommet in trough.

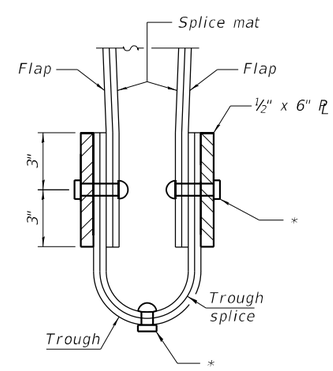

SECTION G-G

MODJESKI and MASTERS	USER NAME =	DESIGNED - YJ	REVISED -	STATE OF ILLINOIS DEPARTMENT OF TRANSPORTATION	FINGER PLATE EXPANSION JOINT AT PIER 4 - 3 STRUCTURE NO. 090-0115	F.A.P. RTE.	SECTION	COUNTY	TOTAL SHEETS	SHEET NO.
		CHECKED - UB	REVISED -			317	(15B-1)BP,BRR	PEO/TAZ	418	291
	PLOT SCALE =	DRAWN - AEC	REVISED -					CONTRACT NO. 68E44		
	PLOT DATE =	CHECKED - UB	REVISED -		SHEET S121 OF S214 SHEETS		ILLINOIS	FED. AID PROJECT		

MODEL: Default
FILE NAME: P:\4312-VBM\CLugageRehab\CADD\Structural_SN 090-0115_WBMainBridge_Final Plans\0900115-68E44-121-fgPlExpltPier4-3.dgn

3/13/2025 12:50:54 PM

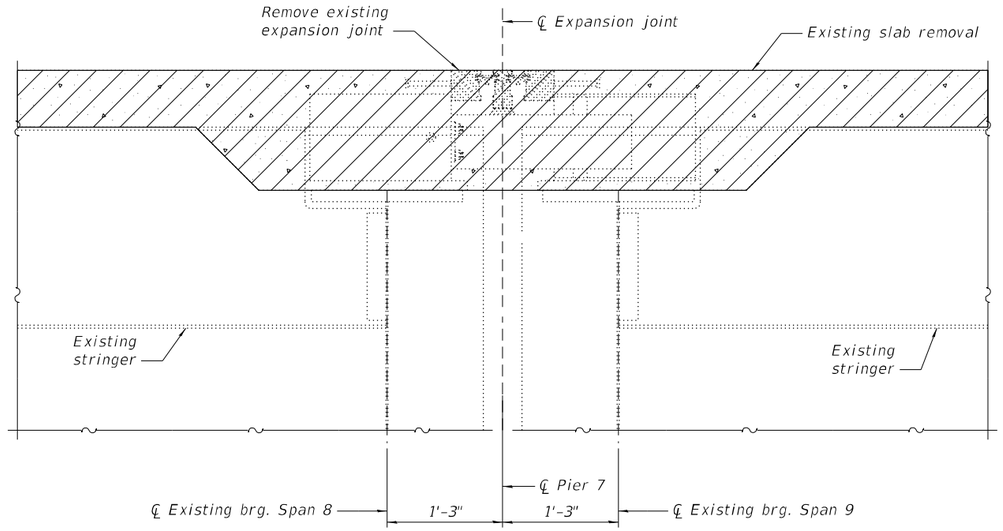

SECTION A-A EXPANSION JOINT REMOVAL

(Dimensions shown at right ∠'s to the joint)

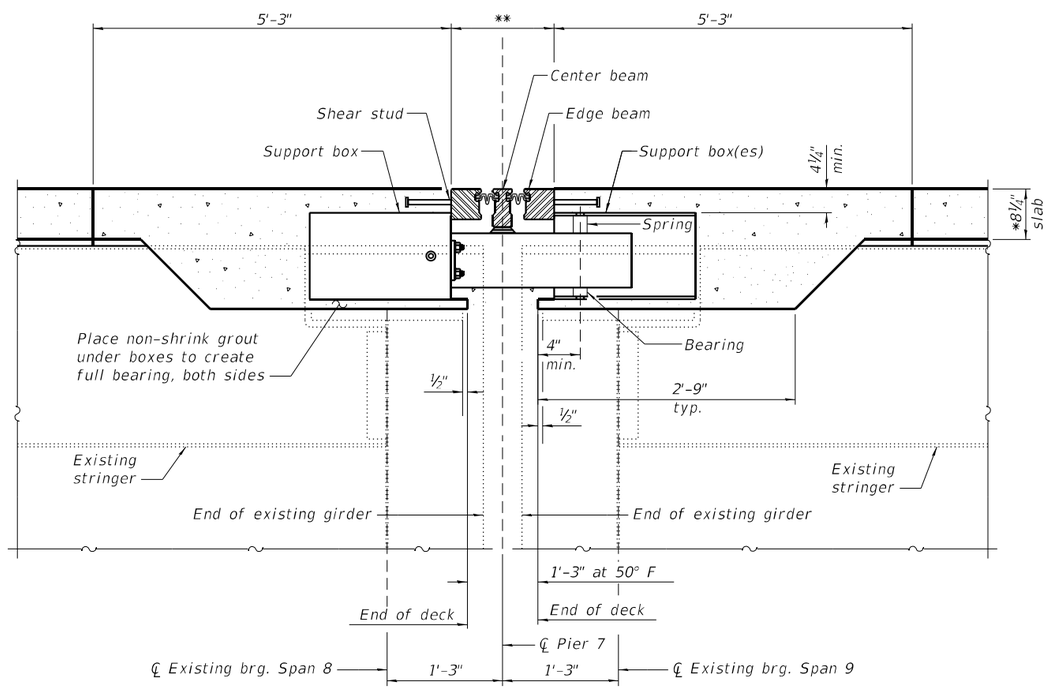

SECTION A-A EXPANSION JOINT REPLACEMENT

(Dimensions shown at right ∠'s to the joint)

* Prior to grinding
** Joint opening, per manufacturer.

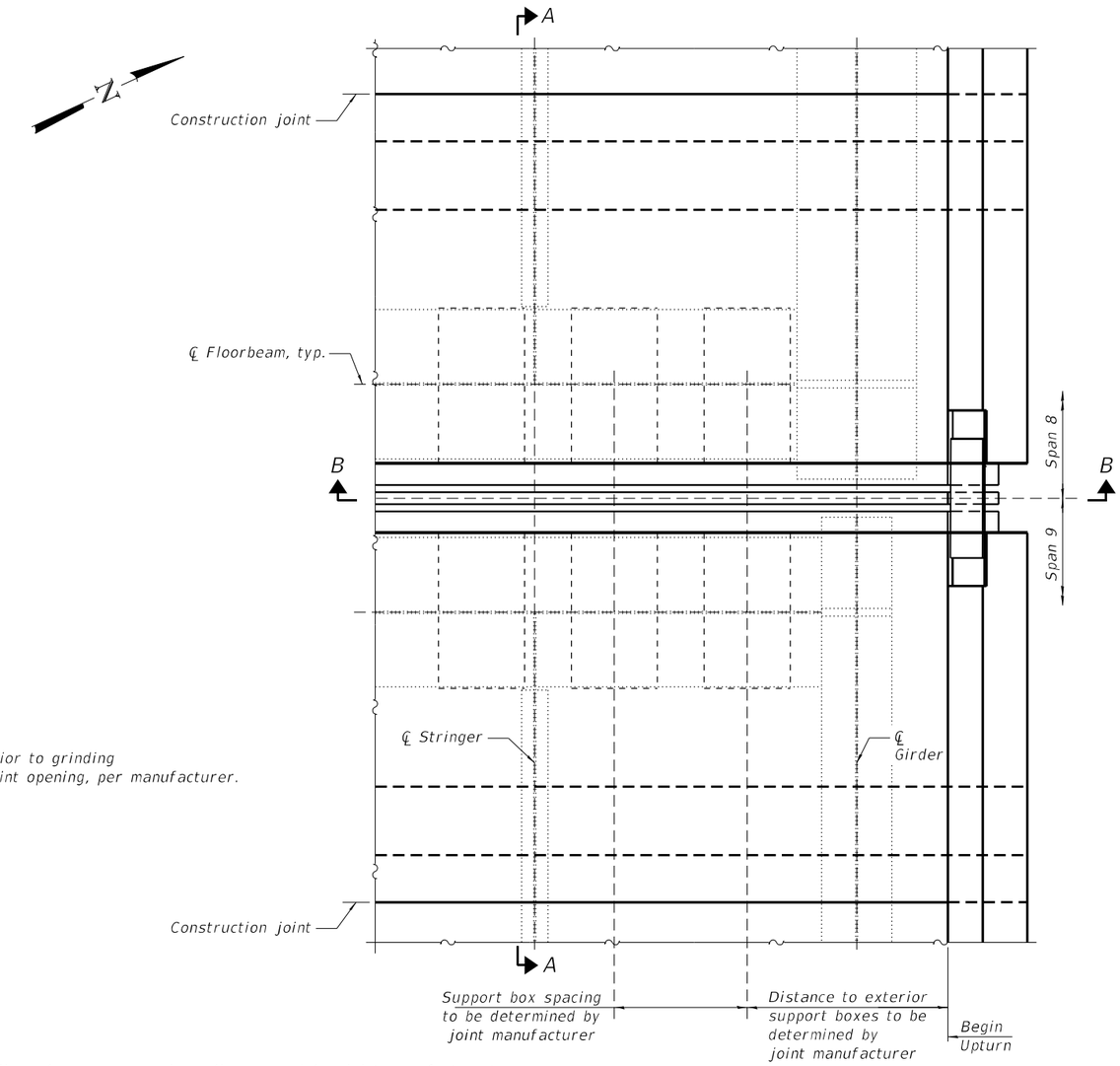

PARTIAL PLAN

Notes:

Actual dimensions may vary depending on modular joint manufacturer's design.

Modular expansion joints shall be installed with forming and reinforcement bars in place prior to pouring the adjoining concrete deck span.

Modular joint assemblies shall be temporarily supported off the end floorbeams until the concrete is placed. Additional supports, if required by design, shall be detailed on the shop drawings to connect to the stringers.

Modular expansion joints shall be adjusted for temperature prior to pouring the blockout area.

Modular expansion joints shall be assembled in their final relative position with ends in place for shop inspection and acceptance.

Bars in the blockout may be adjusted in the field if necessary to miss joint support boxes, as approved by the Engineer.

All steel components of the expansion joint shall be galvanized after fabrication according to Article 520.03 of the Standard Specifications.

Contractor to field verify limits of existing stringer copes. If additional stringer coping is required to accommodate support boxes, the Contractor shall submit calculations and details completed by an Illinois-licensed structural engineer for review and approval by the Engineer before performing stringer modifications.

For Section B-B, see sheet S123 of S214.

Total Long. Movement (in.)	Total Lateral Movement (in.)	Joint Size (in.)
12	0	12

BILL OF MATERIAL

Item	Unit	Quantity
Modular Expansion Joint, 12"	Foot	43

MODEL: Default
FILE NAME: P:\4312-WBMc&LugageRehab\CADD\Structural_SN 090-0115_WBMainBridge_Final Plans\0900115-68E44-122-ModExpJtPier7-1.dgn

MODJESKI and MASTERS

USER NAME =	DESIGNED - UB	REVISED -	
	CHECKED - RLM	REVISED -	
PLOT SCALE =	DRAWN - AEC	REVISED -	
PLOT DATE =	CHECKED - YSS	REVISED -	

STATE OF ILLINOIS
DEPARTMENT OF TRANSPORTATION

MODULAR EXPANSION JOINT AT PIER 7 - 1
STRUCTURE NO. 090-0115

SHEET S122 OF S214 SHEETS

F.A.P. RTE.	SECTION	COUNTY	TOTAL SHEETS	SHEET NO.
317	(15B-1)BP,BRR	PEO/TAZ	418	292

CONTRACT NO. 68E44

ILLINOIS | FED. AID PROJECT

3/13/2025 12:50:58 PM

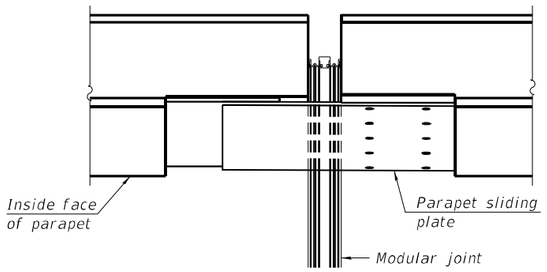

PLAN AT PARAPET

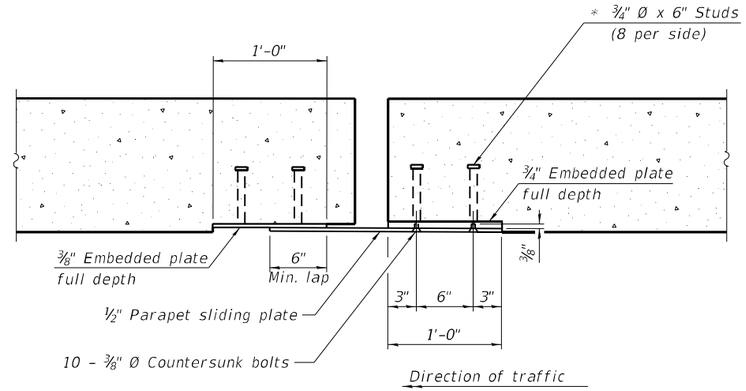

SECTION C-C

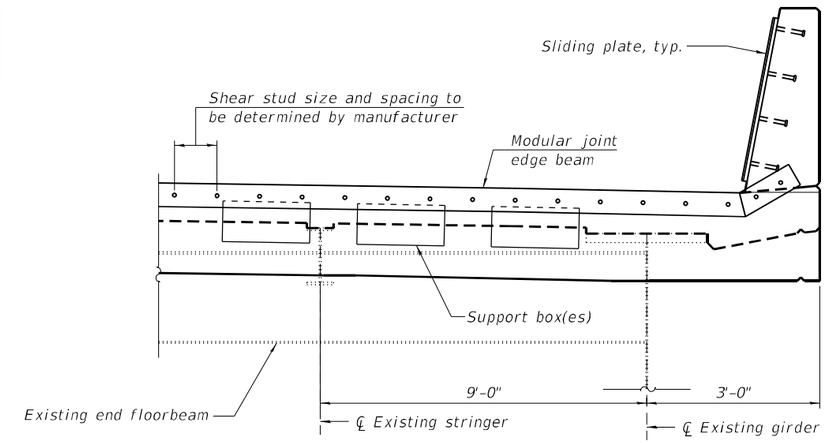

SECTION B-B

Space support boxes to avoid
top flanges of fascia girders

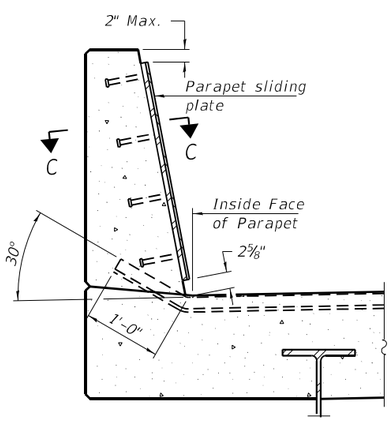

SECTION AT PARAPET

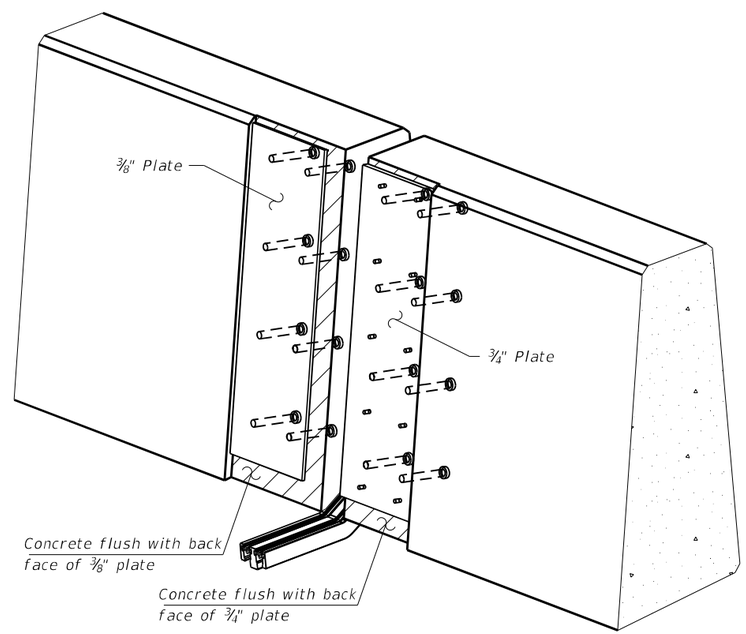

TRIMETRIC VIEW

(Showing embedded plates only)

* Granular or solid flux filled headed studs conforming to Article 1006.32 of the Standard Specifications, automatically end welded.

Notes:

All steel components shall be galvanized after fabrication according to Article 520.03 of the Standard Specifications.

Cost of parapet sliding plates, embedded plates, and anchorage studs, is included with Modular Expansion Joint, 12".

Actual dimension of joint opening may vary based on modular joint manufacturer's design.

MODEL: Default
FILE NAME: P:\4312-WBM\CLigageRehab\CADD\Structural_SN 090-0115_WBMainBridge_Final Plans\0900115-68E44-123-ModExpJtPier7-2.dgn

MODJESKI and MASTERS

USER NAME =	DESIGNED - UB	REVISED -	
	CHECKED - RLM	REVISED -	
PLOT SCALE =	DRAWN - AEC	REVISED -	
PLOT DATE =	CHECKED - YSS	REVISED -	

STATE OF ILLINOIS
DEPARTMENT OF TRANSPORTATION

MODULAR EXPANSION JOINT AT PIER 7 - 2
STRUCTURE NO. 090-0115

SHEET S123 OF S214 SHEETS

F.A.P. RTE.	SECTION	COUNTY	TOTAL SHEETS	SHEET NO.
317	(15B-1)BP,BRR	PEO/TAZ	418	293
		CONTRACT NO. 68E44		
	ILLINOIS	FED. AID PROJECT		

3/13/2025 12:51:01 PM

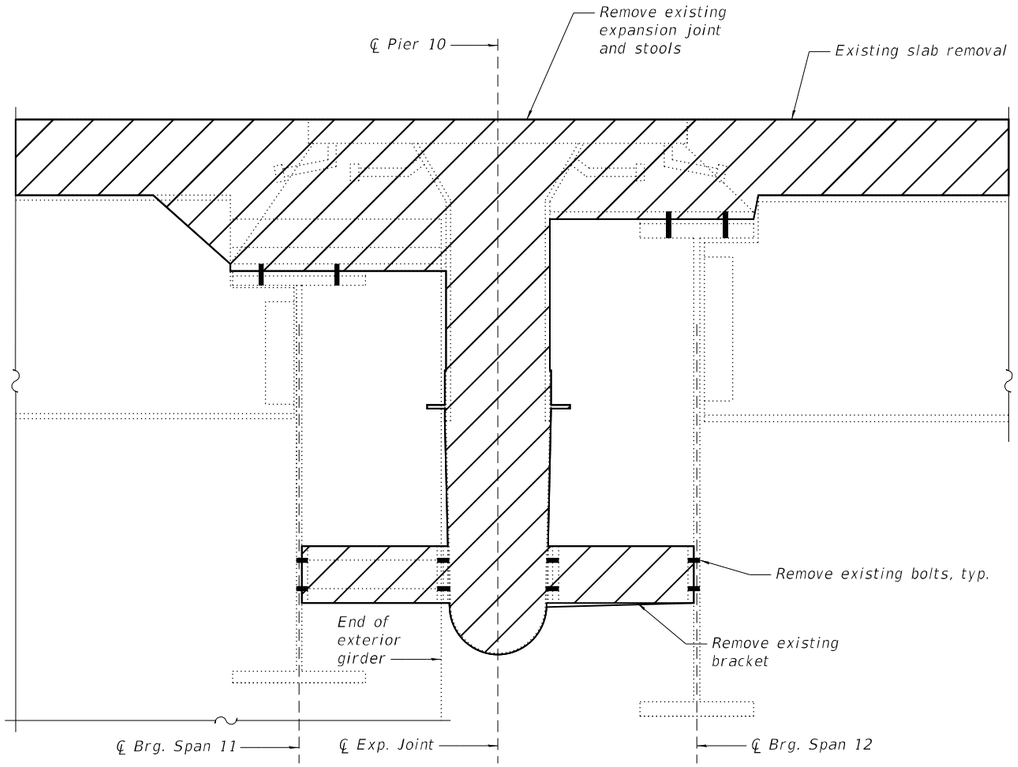

EXPANSION JOINT REMOVAL AT PIER 10

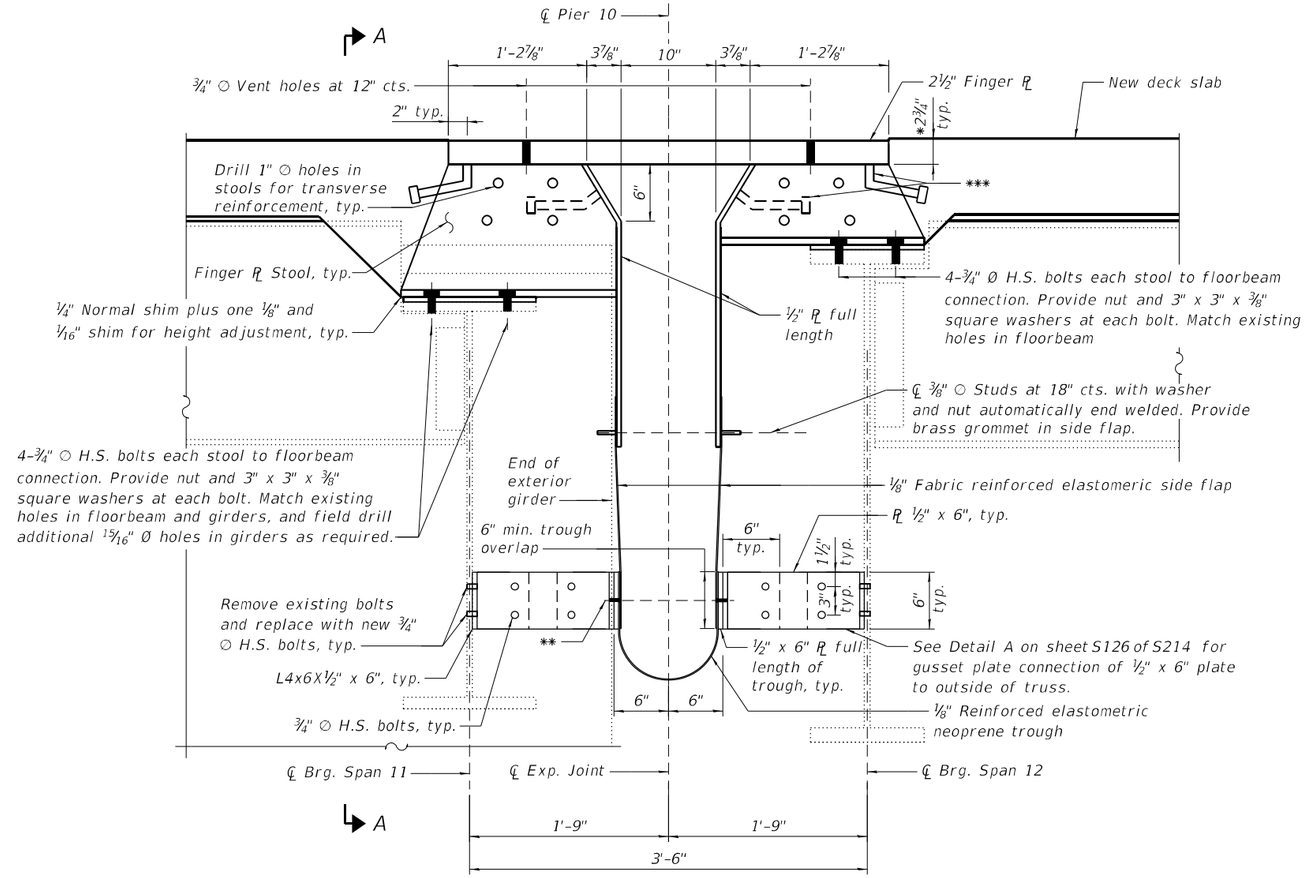

EXPANSION JOINT REPLACEMENT AT PIER 10

Horizontal dimensions are at 50°F

* Prior to grinding

** ⅜" ∅ Steel bolts with locking washers and nuts. Provide brass grommet in trough.

*** ¾" ∅ x 8" Granular or solid flux filled headed studs conforming to Art. 1006.32 of the Std Specifications.

Notes:

See sheet S126 of S214 for Section A-A.

Removal and disposal of the existing bracket and stools identified on the plans shall be in accordance with the special provisions Structural Steel Removal.

See sheet S125 of S214 for additional details and Bill of Material.

Joint openings shall be adjusted according to Article 520.04 of the Std. Specs, when the deck is poured at an ambient temperature other than 50° F.

MODEL: Default
FILE NAME: P:\4312-VBMKC1LugageRehab\CADD\Structural_SN 090-0115_WBMainBridge_Final Plans\0900115-68E44-124-grPIExpJtPier10-1.dgn

MODJESKI and MASTERS	USER NAME =	DESIGNED - YJ	REVISED -
		CHECKED - UB	REVISED -
	PLOT SCALE =	DRAWN - AEC	REVISED -
	PLOT DATE =	CHECKED - UB	REVISED -

STATE OF ILLINOIS
DEPARTMENT OF TRANSPORTATION

FINGER PLATE EXPANSION JOINT AT PIER 10 - 1
STRUCTURE NO. 090-0115

SHEET S124 OF S214 SHEETS

F.A.P. RTE.	SECTION	COUNTY	TOTAL SHEETS	SHEET NO.
317	(15B-1)BP,BRR	PEO/TAZ	418	294
		CONTRACT NO. 68E44		
		ILLINOIS	FED. AID PROJECT	

3/13/2025 12:51:03 PM

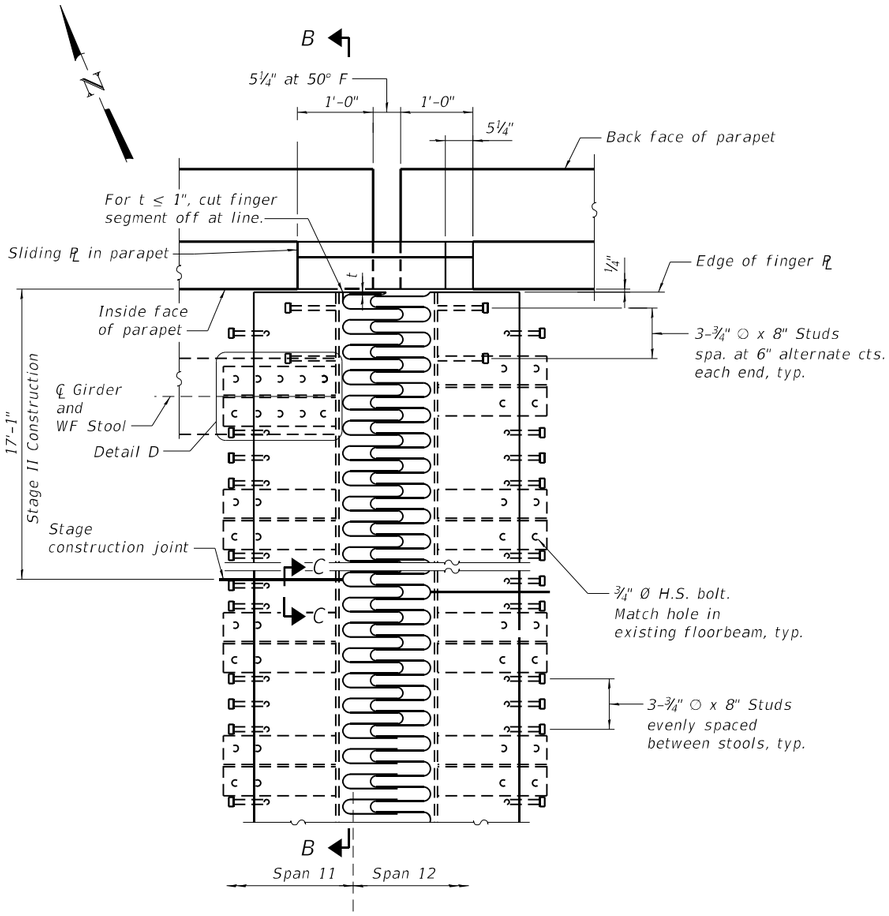

PLAN AT PIER 10

Floorbeam not shown for clarity.

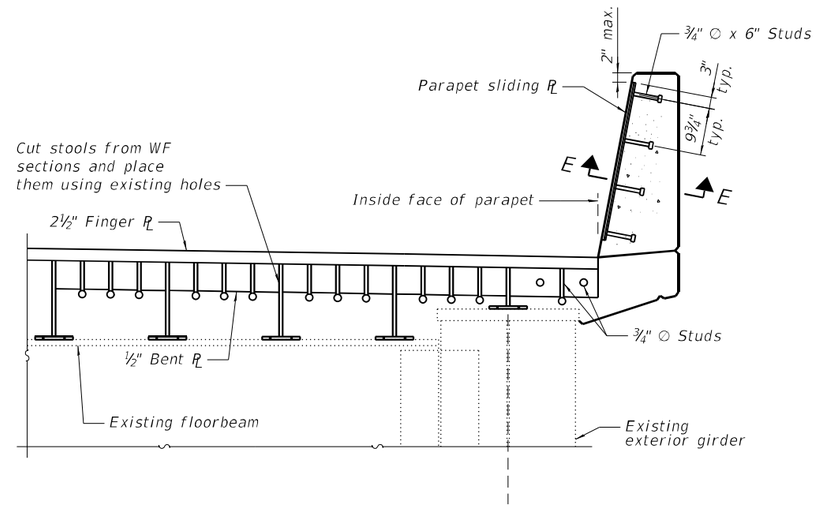

SECTION B-B

Span 11 shown, Span 12 similar

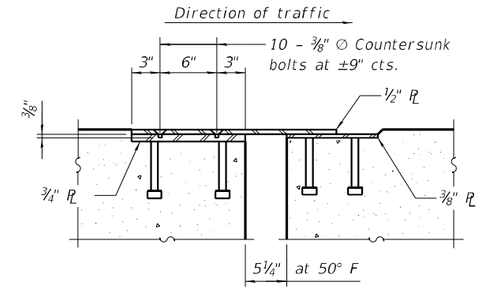

SECTION E-E

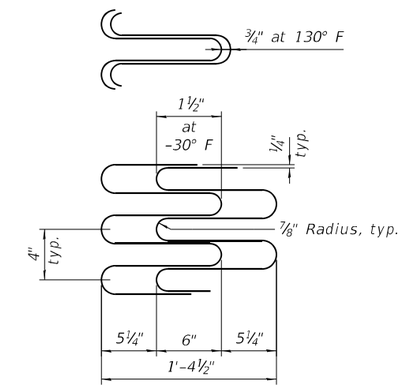

FINGER PLATE SETTING DIAGRAM

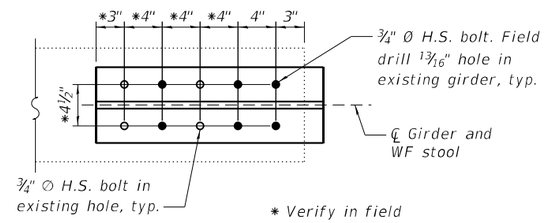

DETAIL D

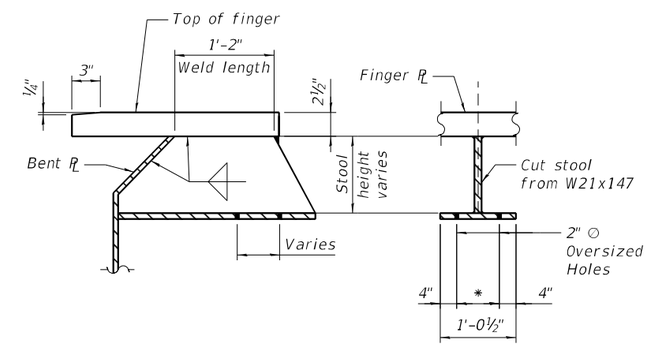

FINGER PLATE STOOL DETAIL

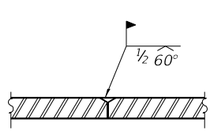

SECTION C-C

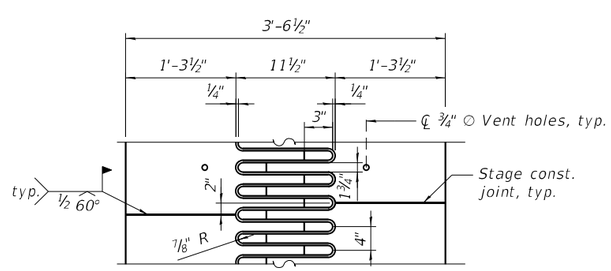

FLAME CUTTING DIAGRAM

Cut from PL 2½" x 3'-6½" x 39'-1⅝"
(1 required)

BILL OF MATERIAL

Item	Unit	Total
Finger Plate Expansion Joint, 5"	Foot	39.5
Fabric Reinforced Elastomeric Trough	Foot	49

Notes:

Finger plate expansion joints shall be assembled in their final relative position with the ends in place for shop inspection and acceptance.

All steel components of the expansion joint shall be galvanized after fabrication according to Article 520.03 of the Standard Specifications.

MODEL: Default
FILE NAME: P:\4312-VBM\CLugageRehab\CADD\Structural_SN 090-0115_WBMainBridge_Final Plans\09001150-68E44-125-fgrPlExpltPier10-2.dgn

MODJESKI and MASTERS	USER NAME =	DESIGNED - YJ	REVISED -
		CHECKED - UB	REVISED -
	PLOT SCALE =	DRAWN - AEC	REVISED -
	PLOT DATE =	CHECKED - UB	REVISED -

STATE OF ILLINOIS
DEPARTMENT OF TRANSPORTATION

FINGER PLATE EXPANSION JOINT AT PIER 10 - 2
STRUCTURE NO. 090-0115

SHEET S125 OF S214 SHEETS

F.A.P. RTE.	SECTION	COUNTY	TOTAL SHEETS	SHEET NO.
317	(15B-1)BP,BRR	PEO/TAZ	418	295
		CONTRACT NO. 68E44		
	ILLINOIS	FED. AID PROJECT		

3/13/2025 12:51:07 PM

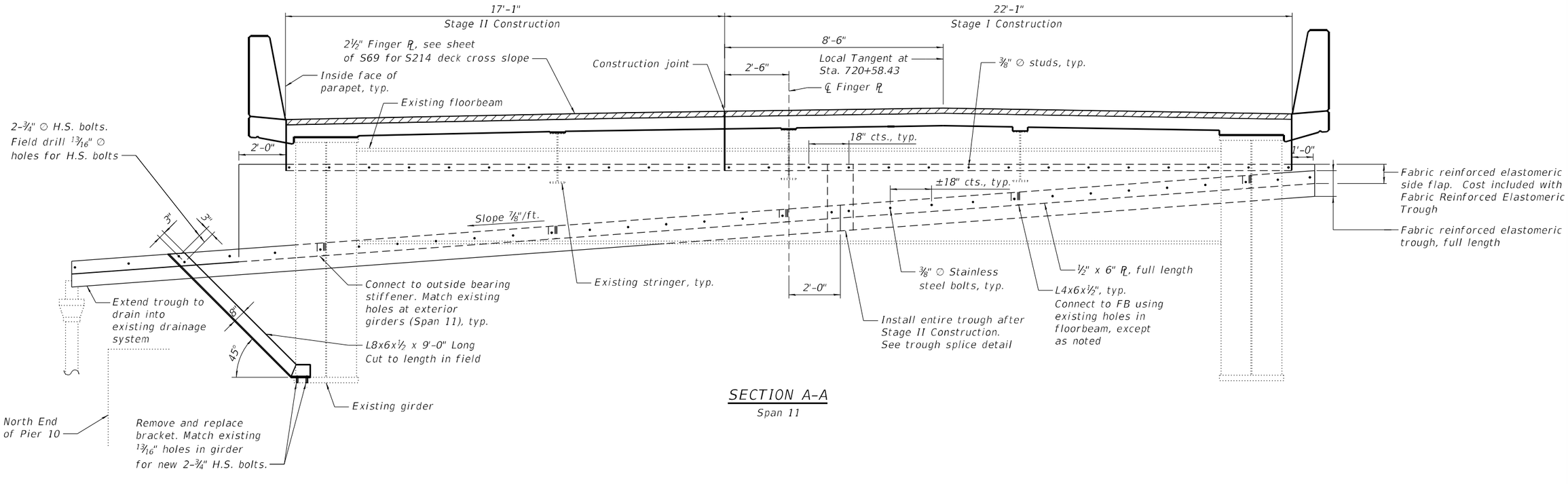

SECTION A-A

Span 11

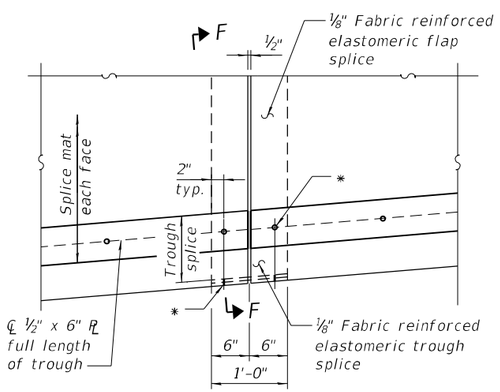

TROUGH SPLICE DETAIL

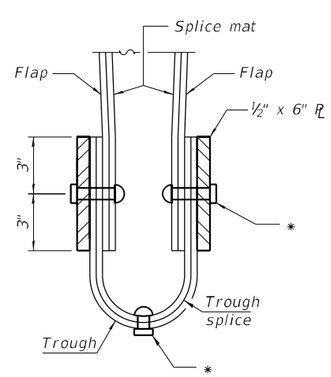

SECTION F-F

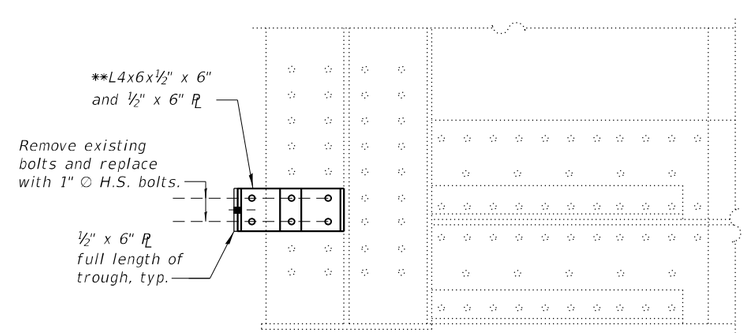

LOWER CHORD ELEVATION

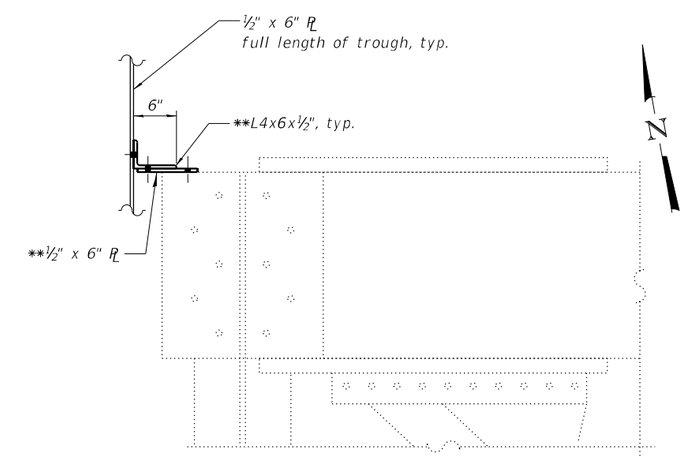

LOWER CHORD PLAN VIEW

* ⅜" ∅ Stainless steel bolts with washers and nuts. Provide brass grommet in trough.

DETAIL A

** Field verify location of ½" PL and L4x6x½" x 6" long attachment

MODEL: Default
FILE NAME: P:\4312-VBM\CLugageRehab\CADD\Structural_SN 090-0115_WBMainBridge_Final Plans\0900115-68E44-126-fgrPlExpltPier10-3.dgn
3/13/2025 12:52:14 PM

MODJESKI and MASTERS

USER NAME =	DESIGNED - YJ	REVISED -	
	CHECKED - UB	REVISED -	
PLOT SCALE =	DRAWN - AEC	REVISED -	
PLOT DATE =	CHECKED - UB	REVISED -	

STATE OF ILLINOIS
DEPARTMENT OF TRANSPORTATION

FINGER PLATE EXPANSION JOINT AT PIER 10 - 3
STRUCTURE NO. 090-0115

SHEET S126 OF S214 SHEETS

F.A.P. RTE.	SECTION	COUNTY	TOTAL SHEETS	SHEET NO.
317	(15B-1)BP,BRR	PEO/TAZ	418	296
		CONTRACT NO. 68E44		
	ILLINOIS	FED. AID PROJECT		

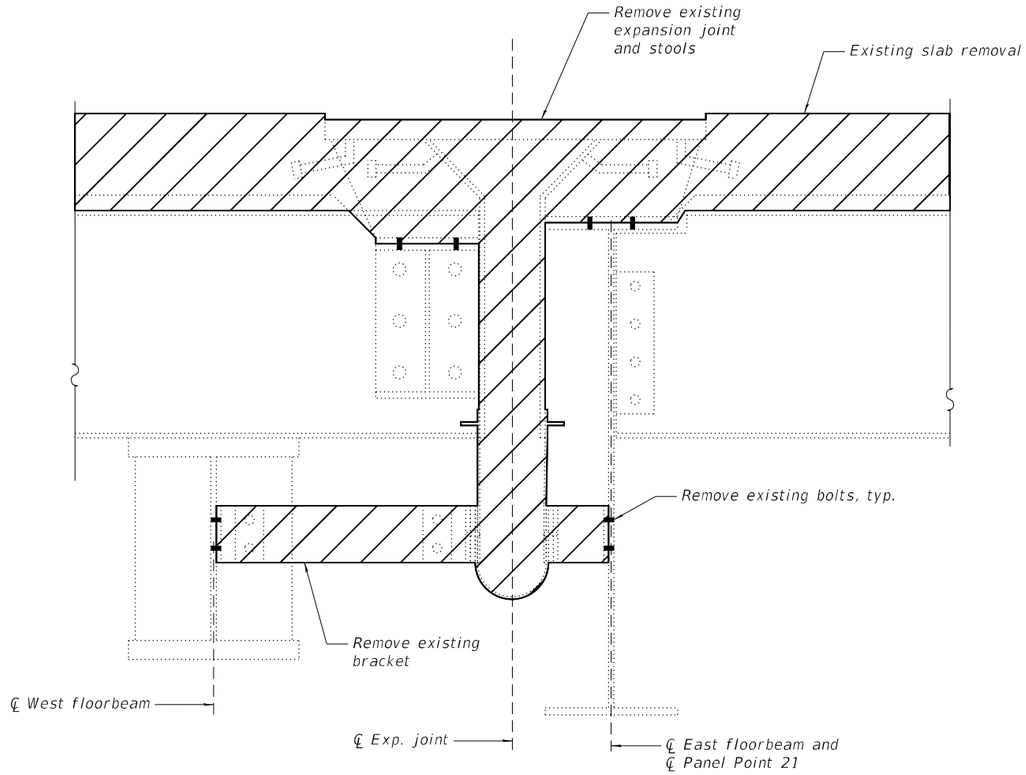

EXPANSION JOINT REMOVAL
AT PP21

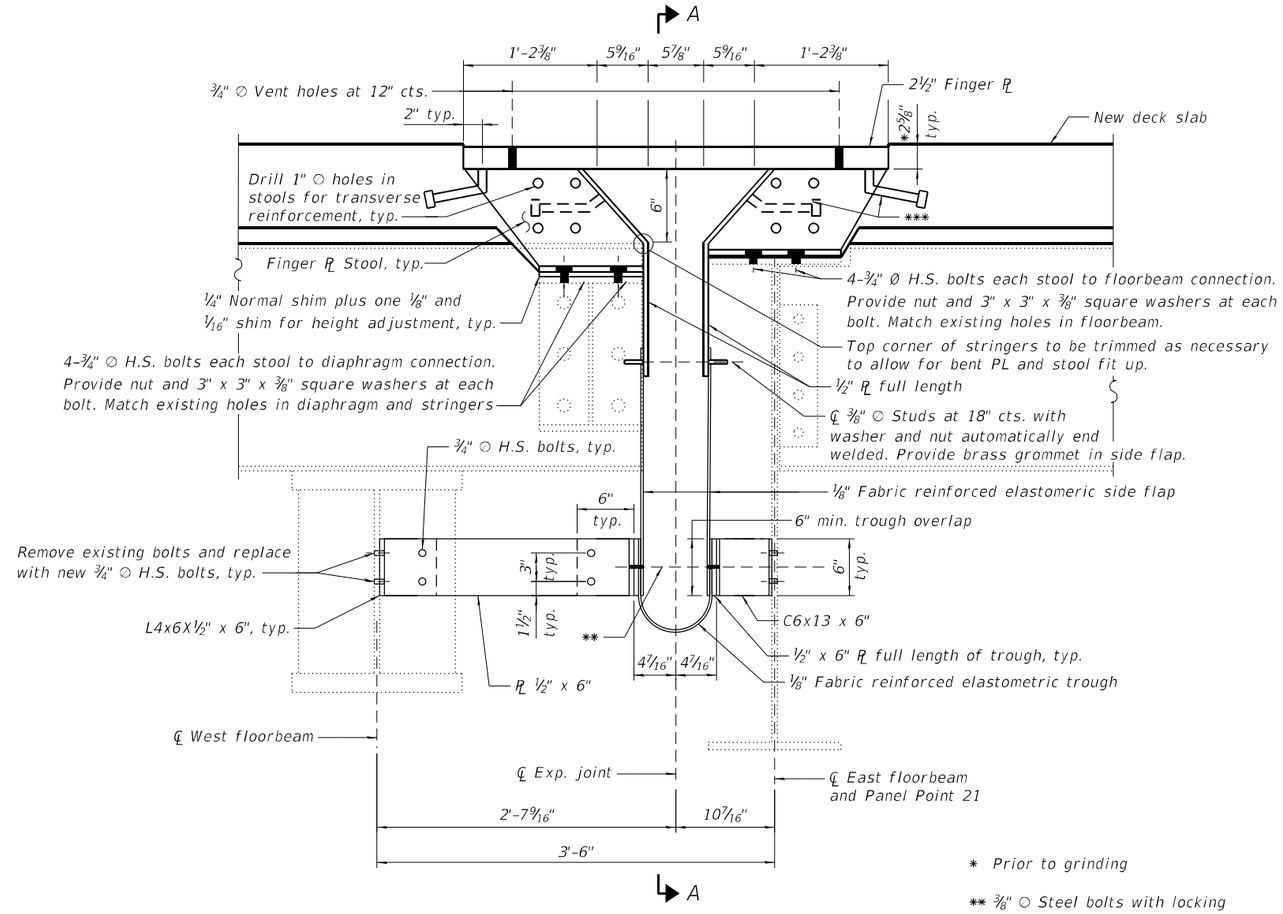

* Prior to grinding

** ⅜" ∅ Steel bolts with locking washers and nuts. Provide brass grommet in trough.

*** ¾" ∅ x 8" Granular or solid flux filled headed studs conforming to Art. 1006.32 of the Std Specifications.

EXPANSION JOINT REPLACEMENT
AT PP21

Horizontal dimensions are at 50°F

Notes:

See sheet S129 of S214 for Section A-A.

Removal and disposal of the existing bracket and stools identified on the plans shall be in accordance with the special provisions Structural Steel Removal.

See sheet S128 of S214 for additional details and Bill of Material.

Joint openings shall be adjusted according to Article 520.04 of the Std. Specs, when the deck is poured at an ambient temperature other than 50° F.

MODEL: Default
FILE NAME: P:\4312-WBM&CLigageRehab\CADD\Structural_SN 090-0115_WBMainBridge_Final Plans\0900115-68E44-127-FgrPlExpltPP21-1.dgn

MODJESKI and MASTERS	USER NAME =	DESIGNED - YJ	REVISED -	STATE OF ILLINOIS DEPARTMENT OF TRANSPORTATION	FINGER PLATE EXPANSION JOINT AT PANEL POINT 21 - 1 STRUCTURE NO. 090-0115
		CHECKED - UB	REVISED -		
	PLOT SCALE =	DRAWN - AEC	REVISED -		
	PLOT DATE =	CHECKED - UB	REVISED -		SHEET S127 OF S214 SHEETS

F.A.P. RTE.	SECTION	COUNTY	TOTAL SHEETS	SHEET NO.
317	(15B-1)BP,BRR	PEO/TAZ	418	297
		CONTRACT NO. 68E44		
		ILLINOIS	FED. AID PROJECT	

3/13/2025 12:52:17 PM

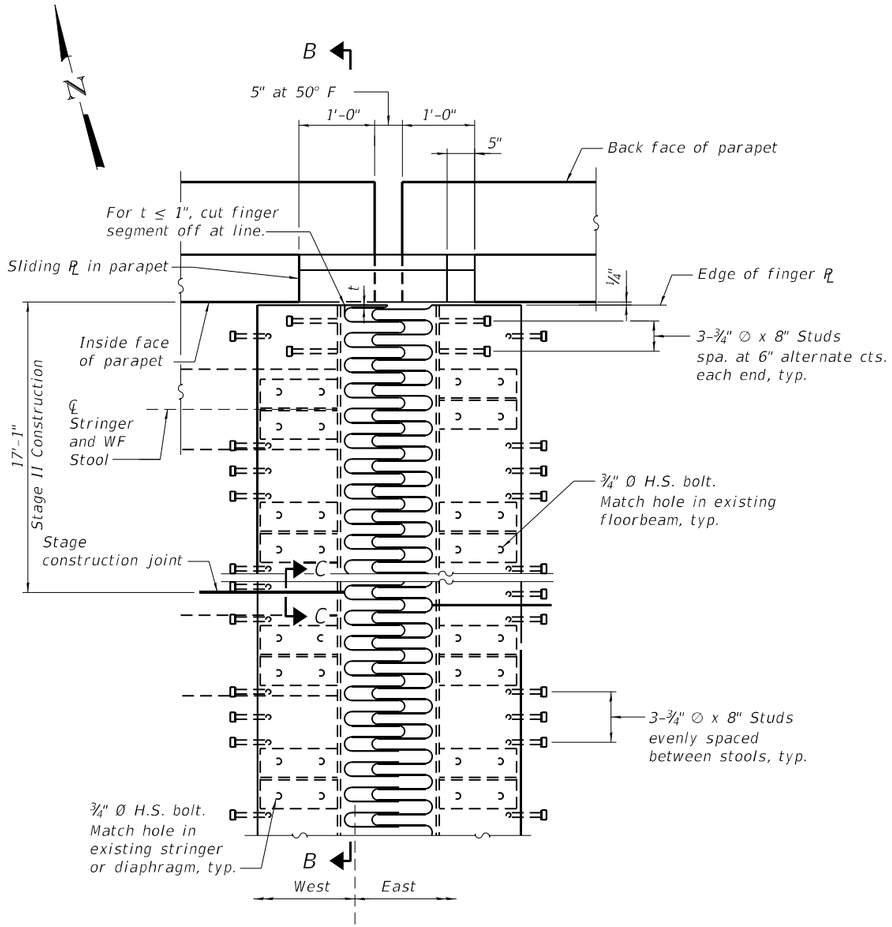

PLAN AT PP21

Floorbeam and diaphragms not shown for clarity.

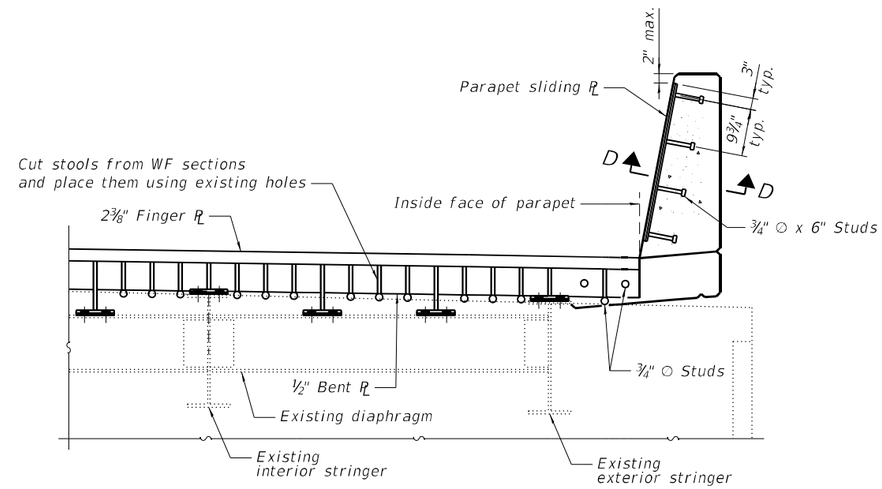

SECTION B-B

West side shown, East side similar

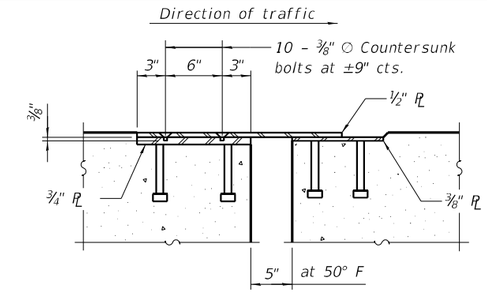

SECTION D-D

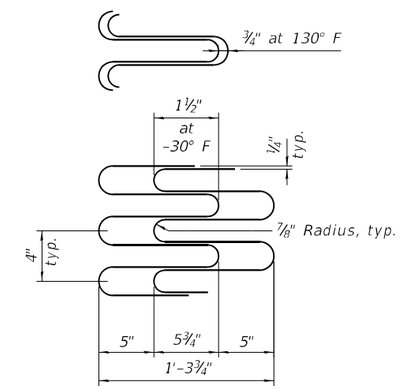

FINGER PLATE SETTING DIAGRAM

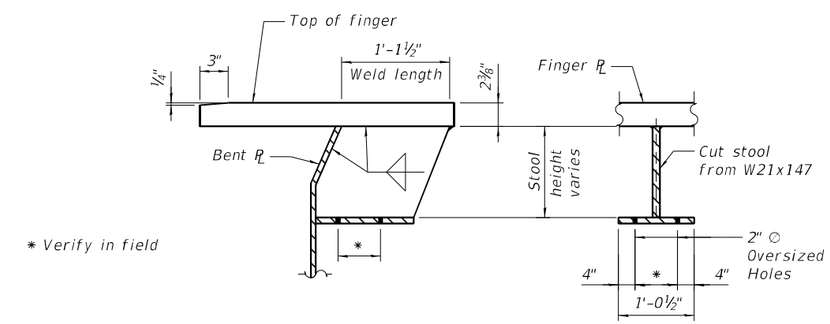

FINGER PLATE STOOL DETAIL

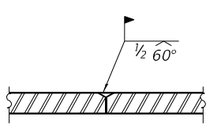

SECTION C-C

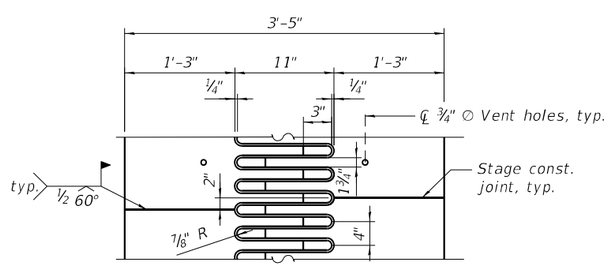

FLAME CUTTING DIAGRAM

Cut from PL 2½" x 3'-5" x 39'-1⅝"
(1 required)

BILL OF MATERIAL

Item	Unit	Total
Finger Plate Expansion Joint, 5"	Foot	39.5
Fabric Reinforced Elastomeric Trough	Foot	42

Notes:

Finger plate expansion joints shall be assembled in their final relative position with the ends in place for shop inspection and acceptance.

All steel components of the expansion joint shall be galvanized after fabrication according to Article 520.03 of the Standard Specifications.

MODEL: Default
FILE NAME: P:\4312-WBMcCluggageRehab\CADD\Structural_SN 090-0115_WBMainBridge_Final Plans\0900115-68E44-128-FgrPlExpltPP21-2.dgn
3/13/2025 12:52:21 PM

MODJESKI and MASTERS

USER NAME =	DESIGNED - YJ	REVISED -
	CHECKED - UB	REVISED -
PLOT SCALE =	DRAWN - AEC	REVISED -
PLOT DATE =	CHECKED - UB	REVISED -

STATE OF ILLINOIS
DEPARTMENT OF TRANSPORTATION

FINGER PLATE EXPANSION JOINT AT PANEL POINT 21 - 2
STRUCTURE NO. 090-0115

SHEET S128 OF S214 SHEETS

F.A.P. RTE.	SECTION	COUNTY	TOTAL SHEETS	SHEET NO.
317	(15B-1)BP,BRR	PEO/TAZ	418	298

CONTRACT NO. 68E44

ILLINOIS FED. AID PROJECT

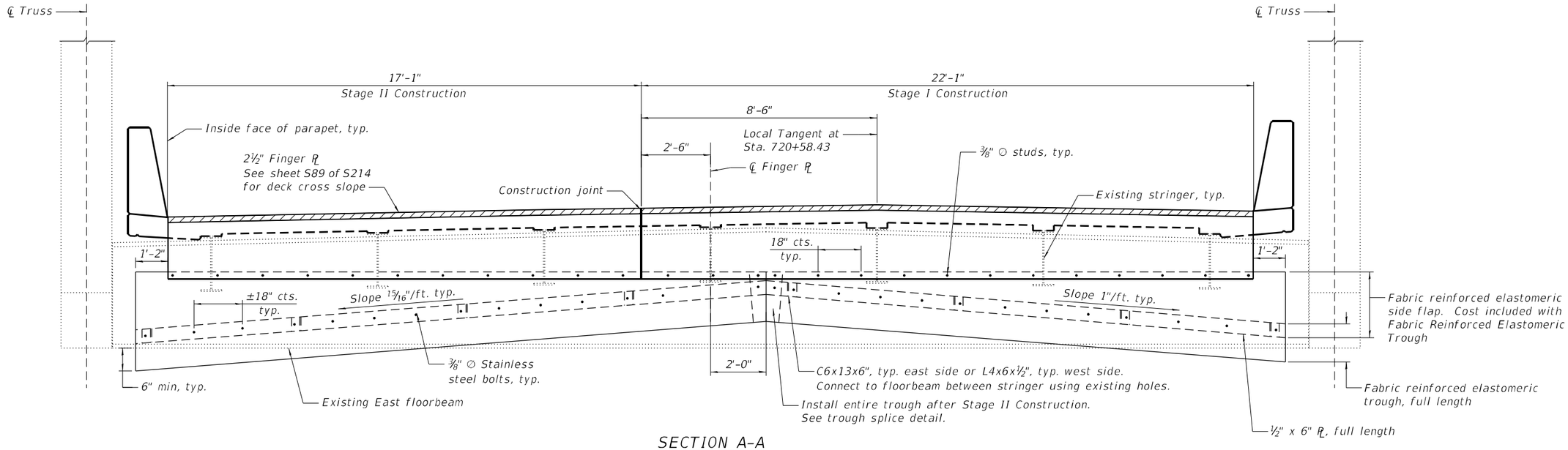

SECTION A-A

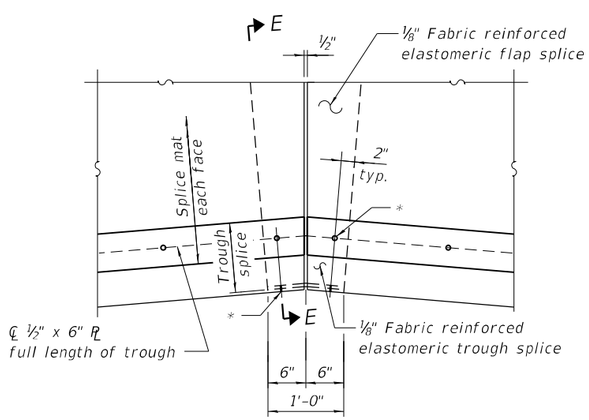

TROUGH SPLICE DETAIL

* ⅜" ○ Stainless steel bolts with washers and nuts. Provide brass grommet in trough.

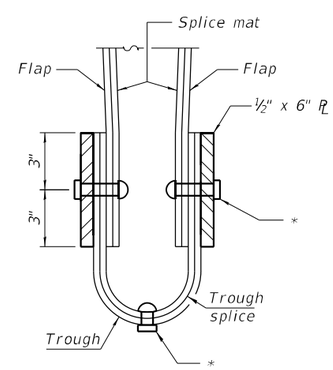

SECTION E-E

MODEL: Default
FILE NAME: P:\4312-VBM\CLugageRehab\CADD\Structural_SN 090-0115_WBMainBridge_Final Plans\0900115-68E44-129-fgrPlExpltPP21-3.dgn

MODJESKI and MASTERS	USER NAME =	DESIGNED - YJ	REVISED -
		CHECKED - UB	REVISED -
	PLOT SCALE =	DRAWN - AEC	REVISED -
	PLOT DATE =	CHECKED - UB	REVISED -

STATE OF ILLINOIS
DEPARTMENT OF TRANSPORTATION

FINGER PLATE EXPANSION JOINT AT PANEL POINT 21 - 3
STRUCTURE NO. 090-0115

SHEET S129 OF S214 SHEETS

F.A.P. RTE.	SECTION	COUNTY	TOTAL SHEETS	SHEET NO.
317	(15B-1)BP,BRR	PEO/TAZ	418	299
		CONTRACT NO. 68E44		
	ILLINOIS	FED. AID PROJECT		

3/13/2025 12:52:24 PM

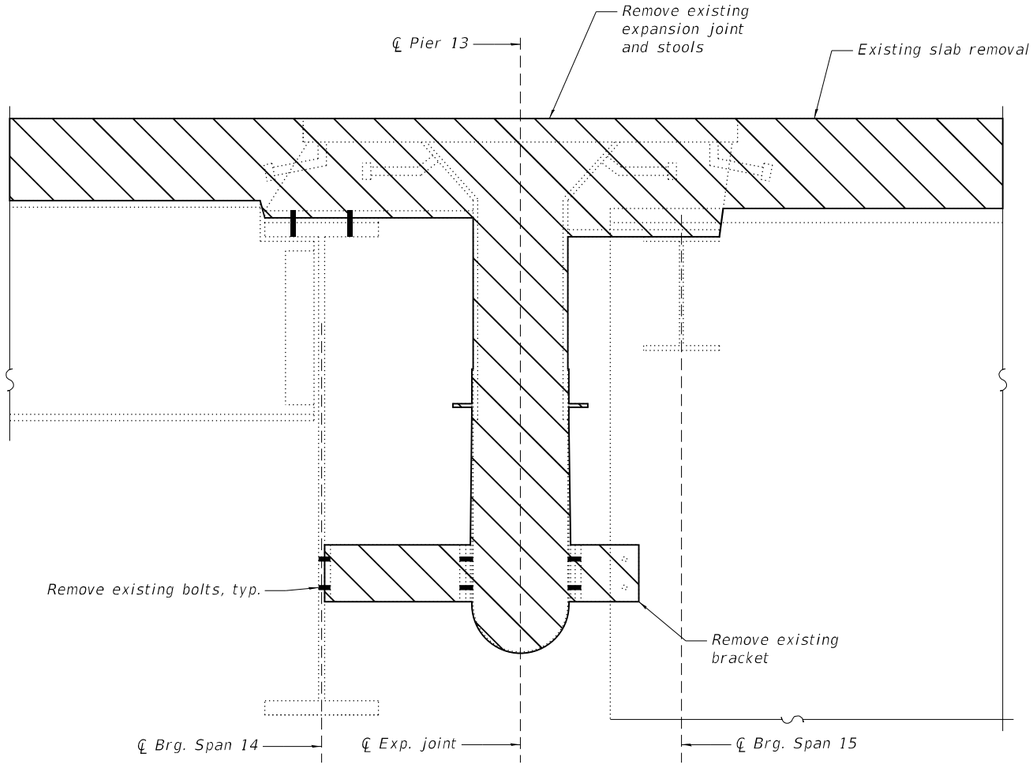

EXPANSION JOINT REMOVAL AT PIER 13

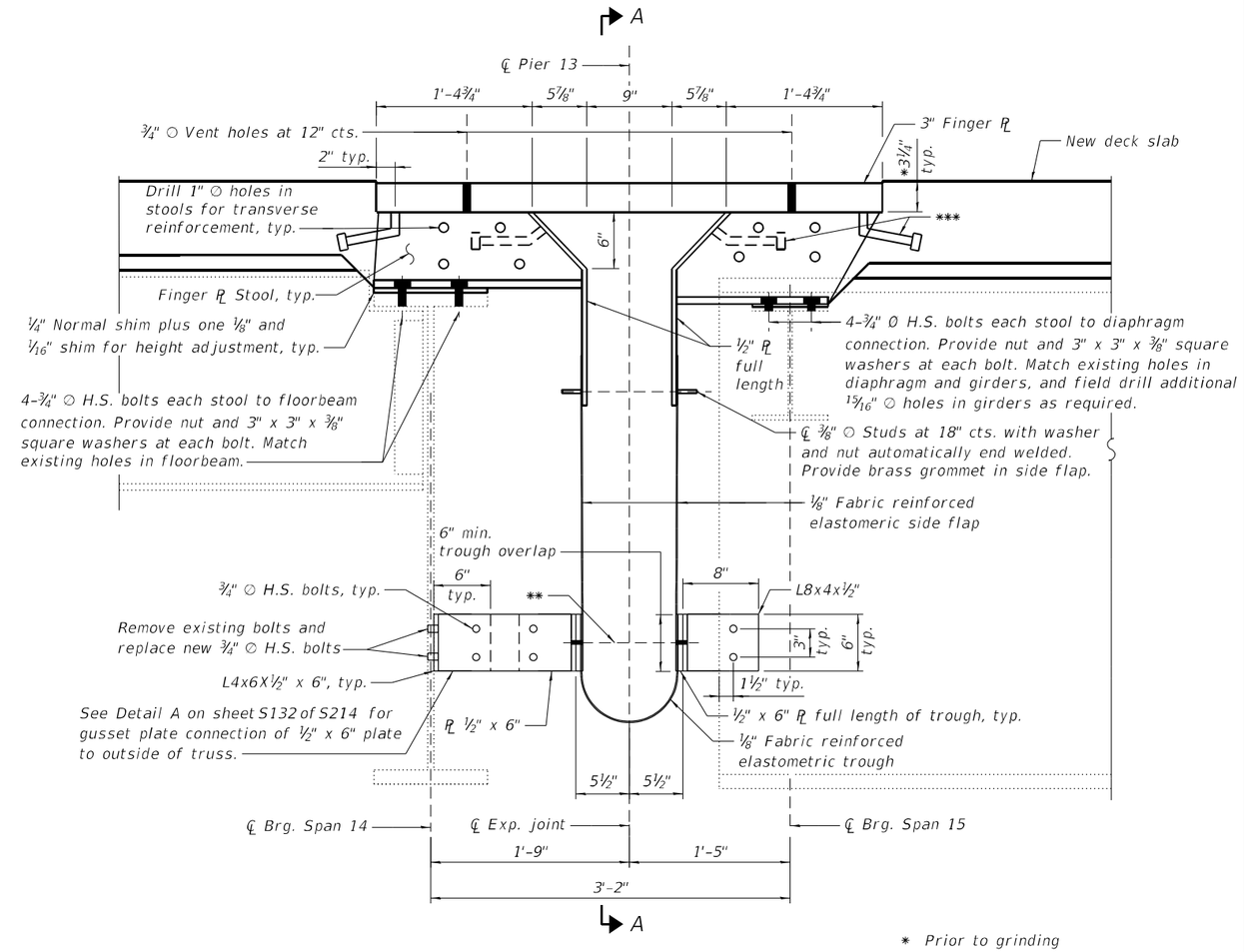

EXPANSION JOINT REPLACEMENT AT PIER 13

Horizontal dimensions are at 50°F

* Prior to grinding

** ⅜" ∅ Steel bolts with locking washers and nuts. Provide brass grommet in trough.

*** ¾" ○ x 8" Granular or solid flux filled headed studs conforming to Art. 1006.32 of the Std Specifications.

Notes:

See sheet S132 of S214 for Section A-A.

Removal and disposal of the existing bracket and stools identified on the plans shall be in accordance with the special provisions Structural Steel Removal.

See sheet S131 of S214 for additional details and Bill of Material.

Joint openings shall be adjusted according to Article 520.04 of the Std. Specs, when the deck is poured at an ambient temperature other than 50° F.

MODEL: Default
FILE NAME: P:\4312-VBMxCLugageRehab\CADD\Structural_SN 090-0115_WBMainBridge_Final Plans\0900115-68E44-130-FgrPlExpJtPier13-1.dgn

MODJESKI and MASTERS	USER NAME =	DESIGNED - YJ	REVISED -
		CHECKED - UB	REVISED -
	PLOT SCALE =	DRAWN - AEC	REVISED -
	PLOT DATE =	CHECKED - UB	REVISED -

STATE OF ILLINOIS
DEPARTMENT OF TRANSPORTATION

FINGER PLATE EXPANSION JOINT AT PIER 13 - 1
STRUCTURE NO. 090-0115

SHEET S130 OF S214 SHEETS

F.A.P. RTE.	SECTION	COUNTY	TOTAL SHEETS	SHEET NO.
317	(15B-1)BP,BRR	PEO/TAZ	418	300
		CONTRACT NO. 68E44		
	ILLINOIS	FED. AID PROJECT		

3/13/2025 12:52:27 PM