STATE OF ILLINOIS
DEPARTMENT OF TRANSPORTATION

F.A. ROUTE NO.	SEC.	COUNTY	TOTAL SHEETS	SHEET NO.
F.A. 669	(X)	PEORIA TAZEWELL	82	1
F.H.W.A. REG. NO. 4		ILLINOIS	PROJ. F-BHF-669(17)	

(X) 103B-I-4(D)

P-94-103-81

LOCATION OF SECTION INDICATED THUS:—

INDEX OF SHEETS
SEE SHEET NO. 2

STANDARDS

1686-4
2113-2
2130-9
2179-14
2298-7
2299-10
2300-3
2315-6
2316-10
2323-9
2333-3
2347-3
2368
2374-1
2378-2
2307-6
2308-4
U-2

PLANS FOR PROPOSED FEDERAL AID HIGHWAY

F.A. ROUTE 669
ILL. ROUTES 8,29,116
SECTION 103B-I-4(D)
PEORIA-TAZEWELL COUNTIES
C-94-115-86
PROJECT F-BHF-669(17)

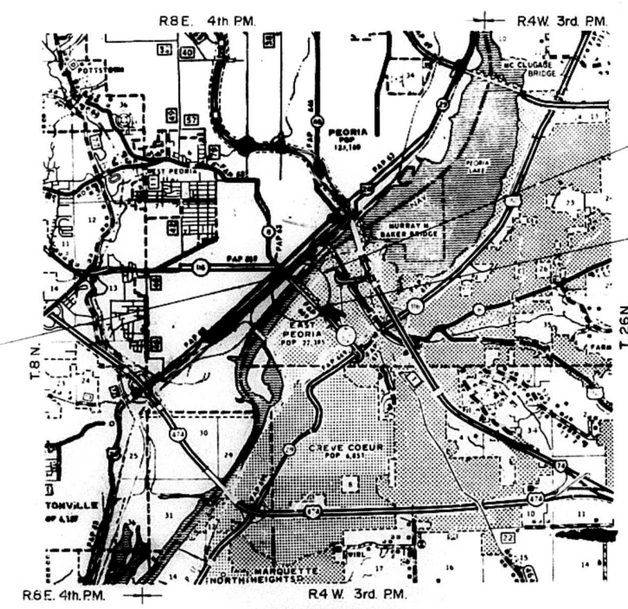

LOCATION MAP
APPROXIMATE SCALE 1" = 1 MILE

PROPOSED IMPROVEMENT
Consists of Improvements and Overlay of West Approach Slab - 45.50', total replacement of concrete deck - 3702.50' b to b Abuts; repair of stringer and floor beams; installation of new deck lighting system and additional work shown in the plans.

END IMPROVEMENT
STA. 37+60.08

BEGIN IMPROVEMENT
STA. 0+12.08

MTA, INCORPORATED
Consulting Engineers
SPRINGFIELD, ILLINOIS

MICROFILMED _____
REEL NUMBER _____
AWARDED _____
RESIDENT ENGINEER _____
AS BUILT CHANGES WERE MADE ON THE FOLLOWING SHEETS

FOR UNDERGROUND UTILITY LOCATIONS CALL
J.U.L.I.E.
TOLL FREE
TELE: 1-800-892-0123

STATE OF ILLINOIS
DEPARTMENT OF TRANSPORTATION

SUBMITTED 9-29 19 87
DISTRICT ENGINEER
EXAMINED 12-31 19 87
ENGINEER OF PLANS AND CONTRACTS
PASSED 12-31 19 87
ENGINEER OF DESIGN
APPROVED 12-31 19 87
DIRECTOR OF HIGHWAYS

CONTRACT NO. 42994

NET LENGTH OF SECTION = 3748.00 LIN. FT. = 0.710 MILE

ROUTE NO	SECTION	COUNTY	TOTAL SHEETS	SHEET NO
F.A.669	⊛	PEORIA TAZEWELL	82	2
FED ROAD DIST NO 7	ILLINOIS	PROJECT		

⊛ 1038-I-4(D)

SUMMARY OF QUANTITIES

CODE NUMBER	ITEM	UNIT	TOTAL	QUANTITIES SFTY-3Q X335-5Θ PEORIA ROADWAY	PEORIA BRIDGE	TAZEWELL BRIDGE
20700100	EMBANKMENT	CU. YD.	198	198		
30800700	BITUMINOUS BASE COURSE 10"	SQ. YD.	243	243		
40800500	PORTLAND CEMENT CONCRETE PAVEMENT, 10"	SQ. YD.	176	176		
40801200	PAVEMENT FABRIC	SQ. YDS.	176	176		
50102400	CONCRETE REMOVAL	CU. YD.	49.1		42.6	6.5
50102900	EXPANSION BOLTS 3/4 INCH	EACH	8		8	
50104800	REMOVAL OF EXISTING CONCRETE DECK	L. SUM	1		0.40	0.60
50200100	STRUCTURE EXCAVATION	CU. YDS.	10		10	
50300100	FLOOR DRAINS	EACH	249		105	144
50300110	PREFORMED JOINT SEAL 1-3/4"	LIN. FT.	52			52
50300120	PREFORMED JOINT SEAL 2-1/2"	LIN. FT.	208		208	
50300130	PREFORMED JOINT SEAL 4"	LIN. FT.	260		104	156
50300300	PROTECTIVE COAT	SQ. YD.	23,910		9,130	14,780
50300310	ELASTOMERIC BEARING ASSEMBLY, TYPE 1	EACH	22		22	
50300250	CLASS X CONCRETE SUPERSTRUCTURE	CU. YD.	5,631.1		2,113.2	3,517.9
50400300	CLASS X CONCRETE	CU. YD.	20.6		13.8	6.8
50700400	FURNISHING AND ERECTING STRUCTURAL STEEL	POUND	141,630		110,320	31,310
50700500	STUD SHEAR CONNECTORS	EACH	51,910		9,800	42,110
50700700	CUTTING STRUCTURAL STEEL	LIN. FT.	335		311	24
50701110	STRUCTURAL STEEL REMOVAL	POUND	379,090		118,080	261,610
50701130	STRUCTURAL STEEL REPAIR	POUND	5,300		2,760	2,540
50800600	HANDRAIL REMOVAL	LIN. FT.	7,446		2,833	4,613
51200100	REINFORCEMENT BARS	POUND	11,340		10,680	660
51200200	REINFORCEMENT BARS, EPOXY COATED	POUND	1,178,280		441,440	736,840
51400100	NAME PLATES	EACH	1		1	
60706600	PIPE DRAINS BITUMINOUS COATED CORRUGATED STEEL 15"	LIN. FT.	60		60	
61600100	CONCRETE CURB (6")	LIN. FT.	6	6		
61605000	COMBINATION CONCRETE CURB & GUTTER, TYPE B[redacted]	LIN. FT.	29	29		
61700100	PAVEMENT REMOVAL	SQ. YD.	447	447		
61700600	SIDEWALK REMOVAL	SQ. FT.	620	620		
62300400	PCC DRIVEWAY PAVEMENT, 8 INCH	SQ. YD.	59	59		
62400100	PORTLAND CEMENT CONCRETE SIDEWALK 4 INCH	SQ. FT.	100	100		
64801625	TRAFFIC CONTROL AND PROTECTION, U-2	L. SUM	1	1		
64801800	TRAFFIC CONTROL AND PROTECTION, SPECIAL	L. SUM	1			1
65000100	MOBILIZATION	L. SUM	1		0.5	0.5
66030100	ELEC. CABLE IN CONDUIT, 600V (XLP-TYPE USE) 1/C No. 12	LIN. FT.	1,734		694	1,040
66030400	ELEC. CABLE IN CONDUIT, 600V (XLP-TYPE USE) 1/C NO. 6	LIN. FT.	X 13,510		6,028	7,482
66060200	BARE COPPER WIRE, 1/C NO. 6	LIN. FT.	6,746		3,014	3,732
66300600	CONDUIT IN TRENCH, 2" DIA., GALV. STEEL	LIN. FT.	X 54		51	3
66304600	CONDUIT ATTACHED TO STRUCT, 2" DIA., GALV. STEEL	LIN. FT.	X 144		134	10
66314600	CONDUIT ATTACHED TO STRUCTURE, 2" DIA. PVC	LIN. FT.	X 6,440		2,788	3,652
66703200	LIGHT POLE ALUMINUM, 45' M.H. 6FT. DAVIT ARM	EACH	16		6	10
66903100	LUMINARE, SODIUM VAPOR, RECTILINEAR TYPE, 150 WATT	EACH	1		1	
66903200	LUMINARE, SODIUM VAPOR, RECTILINEAR TYPE, 250 WATT	EACH	16		6	10

CODE NUMBER	ITEM	UNIT	TOTAL	QUANTITIES SFTY-3Q X335-5Θ PEORIA ROADWAY	PEORIA BRIDGE	TAZEWELL BRIDGE
67200100	NAVIGATION LIGHTING SYSTEM	L. SUM	1		0.5	0.5
L0000100	ADJUST EXISTING LIGHT STANDARD	EACH	1		1	
L0006600	MODIFY EXISTING CONTROL INSTALLATION	EACH	1		1	
L0008750	REMOVAL OF EXISTING LIGHTING SYSTEM COMPLETE	L. SUM	1		0.5	0.5
X0616900	BEARING REHABILITATION	EACH	12		12	
Z0049720	REINFORCED NEOPRENE EXPANSION JOINT TREATMENT	LIN. FT.	104		52	52
Z0007200	BRIDGE SEAT SEALER	L. SUM	1		0.5	0.5
Z0012100	CONCRETE BRIDGE DECK SCARIFICATION (1/4 INCH)	SQ. YD.	210		210	
Z0015600	DECK DRAIN EXTENSIONS	L. SUM	1		0.33	0.67
Z0016200	DECK SLAB REPAIR (PARTIAL)	SQ. YD.	10		10	
Z0018800	DRAINAGE SYSTEM	L. SUM	1			1
⊙ Z0020300	EPOXY CRACK SEALING	LIN. FT.	65		25	40
Z0031300	JACKING AND CRIBBING	L. SUM	1		1	
Z0035000	NEOPRENE EXPANSION JOINT 2"	LIN. FT.	52			52
Z0035100	NEOPRENE EXPANSION JOINT 2-1/2"	LIN. FT.	416		104	312
Z0035200	NEOPRENE EXPANSION JOINT 4"	LIN. FT.	208		78	130
Z0041400	PLASTICIZED BRIDGE DECK CONCRETE OVERLAY	SQ. YD.	267		267	
T0030100	SIGN PANEL - TYPE 3	SQ. FT.	359	359		
T4084600	STEEL MAST ARM ASSEMBLY AND POLE, 24 FT.	EACH	1	1		
T4200500	GALVANIZED STEEL CONDUIT IN TRENCH 2"	LIN FT.	24	24		
[redacted]	ELECTRIC CABLE IN CONDUIT NO. 12 5/C	LIN FT.	198	198		
T4270300	CONCRETE FOUNDATION, TYPE E, 24 INCH DIAMETER	LIN FT.	12	12		
T4280100	HANDHOLE	EACH	2	2		
T4300100	TRENCH AND BACKFILL	LIN FT.	24	24		
* T4330100	RELOCATE EXISTING SIGNAL HEAD	EACH	2	2		
T4370110	REMOVE EXISTING MAST ARM ASSEMBLY AND POLE	EACH	1	1		
T4430300	REMOVE EXISTING HANDHOLE	EACH	1	1		
T4440200	REMOVE EXISTING CONCRETE FOUNDATION	EACH	1	1		
T5020200	PAINT PAVEMENT MARKING LINE 4 INCH	LIN. FT.	20,265		6,552	13,713
T5150200	EPOXY PAVEMENT MARKING LINE 4 INCH	LIN. FT.	20,265		6,552	13,713
T8003200	MONOTUBE OVERHEAD SIGN STRUCTURE SPECIAL	LIN. FT.	105	105		
Z0048665	RAILROAD PROTECTIVE LIABILITY INSURANCE	L. SUM	1		1	
△ Z0076600	TRAINEES	HOUR	2,000		1,000	1,000

*SPECIALTY ITEMS

⊙ NON-PARTICIPATING

△CONSTR. TYPE CODE Y080

INDEX OF SHEETS
CONTENTS

SUBMITTED 9-28-87 [redacted] DIST. DESIGN ENGR.

EXAMINED 9-29-87 DIST. CONST. ENGR.

EXAMINED 9-29-87 DIST. MAINT. ENGR.

EXAMINED 9-28-87 DIST. TRAFFIC ENGR.

Entire section inspected and approved as to policy.

DATE 9-29-87 DISTRICT ENGINEER

Rev. 1-27-88

ROUTE NO	SECTION	COUNTY	TOTAL SHEETS	SHEET NO
F.A.669	⊗	PEORIA TAZEWELL	82	3
FED ROAD DIST NO 7	ILLINOIS	PROJECT		

⊗103B-I-4(D) SHEET 1 OF 70

T.B.M.: Chiseled □, S.W. corner, south column Pier 10, Elev. 464.29

Exist. Structure: Structure No. 090-0030. Completed in 1932; Thirty four spans, 7 simple multibeam, 17 simple riveted two plate girder spans, 7 simple deck truss and 3 spans haunched cantilever truss units. Total length = 3700' back to back of abuts., 46'-0" roadway.

Phase II, this contract, includes removal and replacement of the conc. deck; repair of steel beams & stringers supporting the conc. deck; replacement of parapets & expansion devices; renovation of the west abut. including retaining walls & replacement of the bearings.

Bridge to be closed and traffic detoured during Phase II Operations.

Phase I Contract included
- Pier rehabilition
- Pier bearing adjustment, rehab. or replacement
- Repairs to principal trusses & girders
- Replacement of Navigation Lighting

Phase III Contract, Proposed Painting of Structural Steel

Overhead Lighting, 45' M.H., 6'-0" Arm

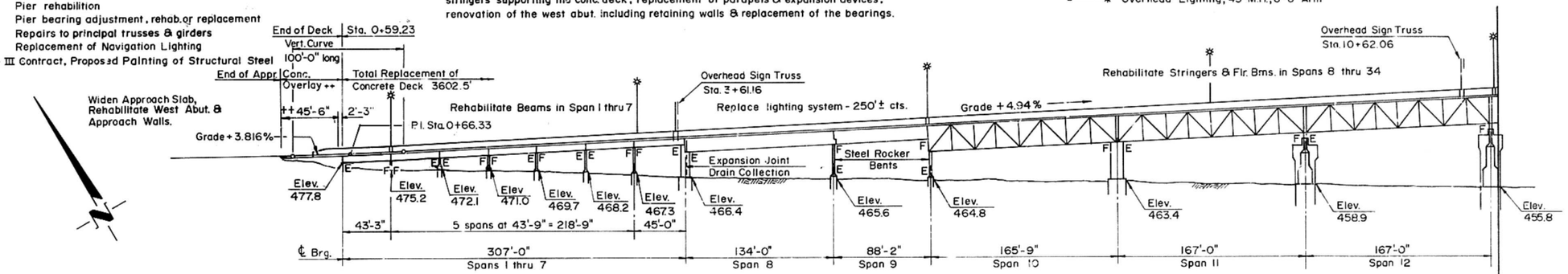

Illinois Structural No. 2664

CURVE DATA

P.I. Sta. 1+63.85
Δ = 2°55'
R = 2770.06'
D = 2°04'07"
T = 70.52'

ELEVATION

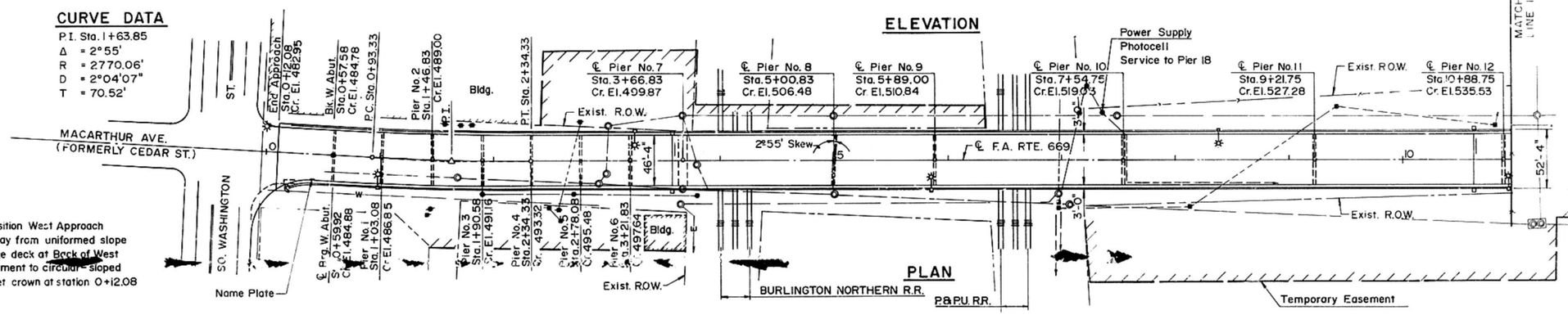

++ Transition West Approach overlay from uniformed slope bridge deck at Back of West Abutment to circular sloped street crown at station 0+12.08

PLAN

DESIGN STRESSES

f'c = 3500 psi (New Construction)
Fy = 60,000 psi (Rebars)
Fy = 36,000 psi (M-183)
Fy = 50,000 psi (M-223, GR. 50)
Loading HS20-44 (New Const.)

Design Specs.- 1983 AASHTO and 1984 ~~Thru~~ 1986 Interim Specs.

No additional wearing surface allowed.

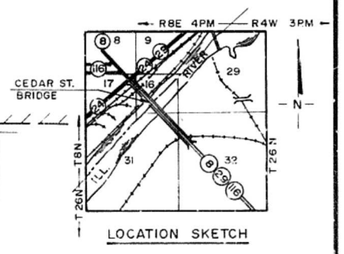

LOCATION SKETCH

GENERAL NOTES

FASTENERS SHALL BE HIGH STRENGTH BOLTS. BOLTS 7/8" Ø, OPEN HOLES 15/16" Ø, UNLESS OTHERWISE NOTED.

THE ROADWAY EXPANSION PLATES SHALL BE FLAME CUT AS PROVIDED IN ARTICLE 507.04(L) OF THE STANDARD SPECIFICATIONS.

THE CONTRACTOR HAS THE OPTION OF REPLACING THE CONCRETE DECK IN STAGES, AS DETAILED ON THE PLANS OR FULL WIDTH.

THE BASE OF THE PARAPET SHALL BE POURED MONOLITHICALLY WITH THE DECK.

FIELD WELDING OF CONSTRUCTION ACCESSORIES WILL NOT BE PERMITTED TO THE BOTTOM FLANGE OF BEAMS OR GIRDERS NOR TO THE TOP FLANGE FOR A DISTANCE EQUAL TO ONE-FOURTH THE SPAN LENGTH EACH WAY FROM THE FLOOR BEAM OR PIER SUPPORTS. FIELD WELDING IN OTHER AREAS AND TO TRUSS MEMBERS WILL BE PERMITTED ONLY WHEN APPROVED BY THE ENGINEER.

THE STRUCTURAL STEEL BEARING PLATES OF THE ELASTOMERIC BEARING ASSEMBLY SHALL CONFORM TO THE REQUIREMENTS OF AASHTO M-223, GR.50.

REINFORCEMENT BARS SHALL CONFORM TO THE REQUIREMENTS OF AASHTO M-31, M-42, OR M-53 GRADE 60.

PLAN DIMENSIONS AND DETAILS RELATIVE TO EXISTING STRUCTURE HAVE BEEN TAKEN FROM EXISTING PLANS AND ARE SUBJECT TO NOMINAL CONSTRUCTION VARIATIONS. IT SHALL BE THE CONTRACTOR'S RESPONSIBILITY TO VERIFY SUCH DIMENSIONS AND DETAILS IN THE FIELD AND MAKE NECESSARY APPROVED ADJUSTMENTS PRIOR TO CONSTRUCTION OR ORDERING OF MATERIALS. SUCH VARIATIONS SHALL NOT BE CAUSE FOR ADDITIONAL COMPENSATION FOR A CHANGE IN THE SCOPE OF THE WORK, HOWEVER, THE CONTRACTOR WILL BE PAID FOR THE QUANTITY ACTUALLY FURNISHED AT THE UNIT PRICE BID FOR THE WORK.

ROADWAY EXPANSION GUARDS SHALL BE ASSEMBLED IN THE PROPER POSITION WITH THE ENDS IN PLACE AND SHALL BE LEFT ASSEMBLED FOR SHOP INSPECTION.

BEARING SEAT SURFACES AT W. ABUT. SHALL BE CONST. OR ADJUSTED TO DESIGNATED ELEVATIONS WITHIN A TOLERANCE OF 1/8 INCH. ADJUSTMENT SHALL BE MADE EITHER BY GRINDING THE SURFACE OR BY SHIMMING THE BEARING. TWO 1/8" ADJUSTING SHIMS, OF THE DIMENSIONS OF THE BOTTOM BEARING PLATE, SHALL BE PROVIDED FOR EACH BEARING IN ADDITION TO ALL OTHER PLATES OR SHIMS. FOR TYPE I ELASTOMERIC BEARINGS, SHIMS OF THE DIMENSIONS OF TOP PLATE SHALL BE PROVIDED AND PLACED AS DETAILED.

Tightening and inspection of all high strength bolt connections shall conform to the requirements of the latest issue of the Specification for Structural Joints using ASTM A325 (M164) or A490 (M253) bolts for slip-critical connections. Except tightening methods using either the load indicating washers or the calibrated wrench are not allowed.

THE CONTRACTOR MUST USE EXTREME CARE WHEN DOING CONCRETE REMOVAL & PATCHING AS NOT TO NICK, CUT OR DAMAGE ANY OF THE STRUCTURAL STEEL.

THE REMOVAL OF EXISTING BITUMINOUS WEARING SURFACE OVERLAYING AREAS OF CONCRETE REMOVAL IN THE WEST APPROACH IS CONSIDERED INCIDENTAL TO CONCRETE REMOVAL AND WILL NOT BE PAID FOR SEPARATELY.

ALL REQUIRED SAW-CUTTING WILL NOT BE PAID FOR SEPARATELY BUT SHALL BE INCIDENTAL TO THE REMOVAL ITEM INVOLVED.

CONCRETE AND STRUCTURAL STEEL REPAIR AREAS WERE OBSERVED IN 1985 INSPECTIONS. PATCHING AND REPAIR QUANTITIES ARE APPROXIMATE AND ACTUAL QUANTITIES WILL BE DETERMINED BY THE ENGINEER DURING CONSTRUCTION.

All structural steel fabricators performing work on the main load carrying components of steel structures shall be certified under Category III (AISC) of the Quality Certification Program.

THE MAIN LOAD CARRYING MEMBER COMPONENTS SUBJECT TO TENSILE STRESS SHALL CONFORM TO THE SUPPLEMENTAL REQUIREMENTS FOR NOTCH TOUGHNESS ZONE 2. THESE COMPONENTS ARE THE TENSION FLANGES, WEBS AND ALL SPLICE PLATE MATERIAL OF 1" STEEL GIRDERS OR WIDE FLANGE BEAMS.

EXPANSION BOLTS SHALL CONSIST OF APPROVED EXPANSION ANCHORS, PROVIDING MINIMUM CERTIFIED PROOF LOAD = 4,080 LBS., AND 3/4" Ø X 12" HOOKED BOLTS.

STATION 18+86.08
REBUILT 198_ BY
STATE OF ILLINOIS
F.A. RTE 669 SEC. 103 B-I-4
F.A. PROJ. F-BHF-669(17)
LOADING HS20
STR. NO. 090-0030

NAME PLATE
(See Std 2113)
For location of Name Plate
See Sheet 36.

"All contact surface areas of the existing structural steel to which new structural steel is to be connected shall be free of paint or lacquer."

~~"All new structural steel shall receive one coat of the lead and chromate free alkyd paint system primer and two coats of aluminum paint."~~

"All new structural steel shall be shop painted with the zinc silicate primer."

APPROVED
FOR STRUCTURAL ADEQUACY
James I. Kaylor
Chief Bridge Engineer

GENERAL PLAN & ELEVATION
SPANS 1-12
CEDAR STREET BRIDGE
F.A. ROUTE 669
(ILL. ROUTES 8, 29 & 116)
SECTION 103B-I-4(D)
PEORIA TAZEWELL COUNTIES
STRUCTURE NO. 090-0030

MTA, INCORPORATED

DESIGNED J.N.		CHECKED G.B.M.	
DRAWN R.H.H.		DATE 12-11-87	NO. 85-12

Rev 1-27-88

ROUTE NO	SECTION	COUNTY	TOTAL SHEETS	SHEET NO
FA 669	⊛	PEORIA TAZEWELL	82	4
FED ROAD DIST NO 7	ILLINOIS	PROJECT		
⊛ 103B-I-4(D)			SHEET 2	OF 70

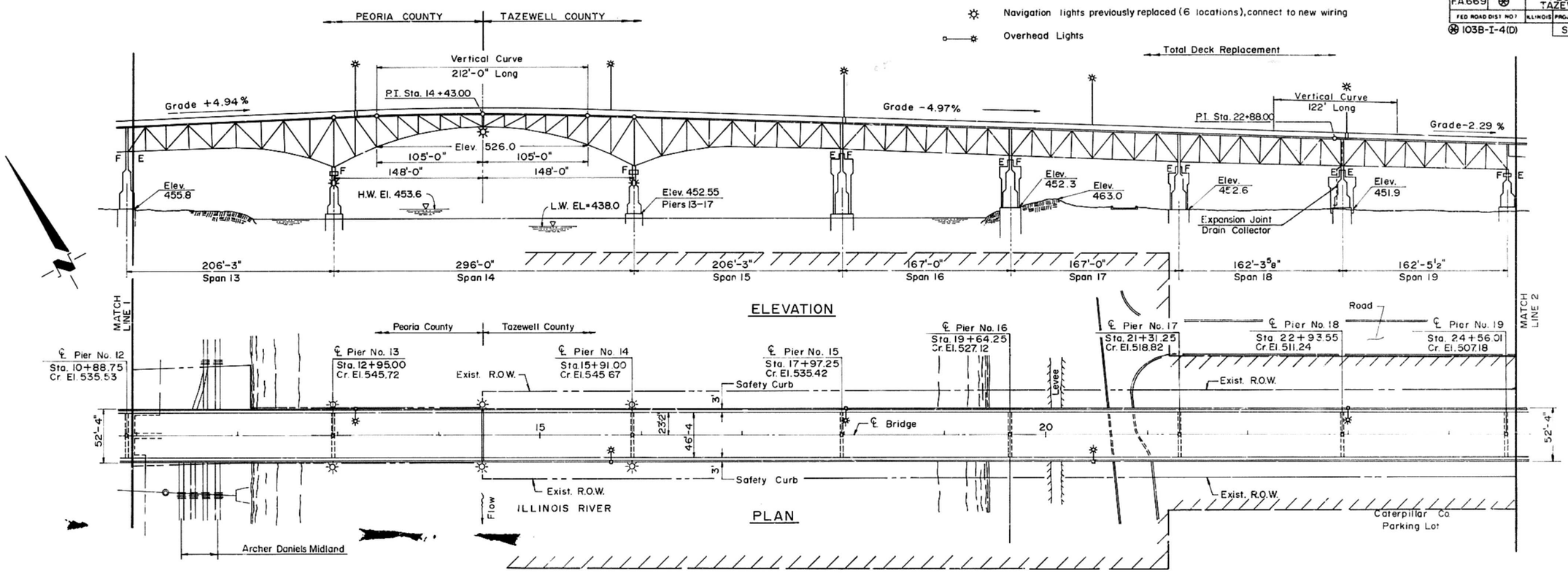

TOTAL BILL OF MATERIAL

ITEM	UNIT	QUANTITY
Concrete Removal ①	Cu. Yds.	49.1
Structure Excavation ②	Cu. Yds.	10
Preformed Joint Seal 1 3/4"	Lin. Ft.	52
Preformed Joint Seal 2 1/2"	Lin. Ft.	208
Preformed Joint Seal 4"	Lin. Ft.	260
Protective Coat *	Sq. Yds.	23,910
Elastomeric Bearing Assembly, Type I	Each	22
Floor Drains	Each	249
Class X Concrete Superstructures	Cu. Yds.	5,631.1
Class X Concrete	Cu. Yds.	20.6
Removal of Existing Concrete Deck	Lump Sum	One
Structual Steel	Pound	141,630
Stud Shear Connectors	Each	51,910
Cutting Structural Steel ③	Lin. Ft.	335
Structural Steel Removal	Pound	379,690

ITEM	UNIT	QUANTITY
Structural Steel Repair	Pound	5,300
Reinforcement Bars ④	Pound	11,340
Reinforcement Bars (Epoxy Coated)	Pound	1,178,280
Monotube Overhead Sign Structure, Special	Lin. Ft.	105
Expansion Bolts 3/4" Ø	Each	8
Bridge Seat Sealer ⑥	Lump Sum	One
Deck Slab Repair (Partial)	Sq. Yds.	10
Concrete Bridge Deck Scarification (1/4")	Sq. Yds.	210
Drainage System	Lump Sum	One

ITEM	UNIT	QUANTITY
Deck Drain Extensions	Lump Sum	One
Epoxy Crack Sealing ②	Lin. Ft.	65
Name Plates ⑤	Each	One
Jacking and Cribbing	Lump Sum	One
Neoprene Expansion Joint 2"	Lin. Ft.	52
Neoprene Expansion Joint 2 1/2"	Lin. Ft.	416
Neoprene Expansion Joint 4"	Lin. Ft.	208
Reinforced Neoprene Expansion Joint Treatment	Lin. Ft.	104
Pipe Drains, Bit. Coated Corrugated Steel 15"	Lin. Ft.	60
Plasticized Bridge Deck Concrete Overlay	Sq. Yds.	267
Handrail Removal	Lin. Ft.	7446
Bearing Rehabilitation	Each	12
Navigation Lighting System	Lump Sum	One

* Quantity includes bridge deck. See Spec. Prov. for Curing and Texturing Bridge Deck.

TOTAL BILL OF MATERIAL CONT. ON SHEET 3 OF 70

① Includes 11.8 Cu. Yds. Substructure Quantity
② Substructure Quantities
③ Cutting Structural Steel - See Sheet 29,55 of 70.
④ Includes 730 lbs. Substructure Quantity
⑤ See Sheet 1 of 70.
⑥ Bridge Seat Sealer - Apply to brg. seats, East & West Abuts., Piers 7 & 18

BILL OF MATERIAL
GENERAL PLAN & ELEVATION
SPANS 13-19
CEDAR STREET BRIDGE
F.A. ROUTE 669
(ILL. ROUTES 8, 29, 116)
SECTION 103B-I-4(D)
PEORIA TAZEWELL COUNTIES

MTA, INCORPORATED

DESIGNED J.N.	CHECKED G.B.M.
DRAWN R.H.H.	DATE 12-11-87 NO. 85-12

ROUTE NO	SECTION	COUNTY	TOTAL SHEETS	SHEET NO
FA.669	(68)	PEORIA TAZWELL	82	5
FED ROAD DIST NO 7		ILLINOIS PROJECT		

(68) 103B-I-4(D) SHEET 3 OF 70

Total replacement of Concrete deck spans 1-34 billed as Removal of Concrete Deck, Lump Sum and Class X Concrete Superstructures, Cu. Yds. (Volume of existing deck concrete totals 5360 cu. yds. on existing plans.)

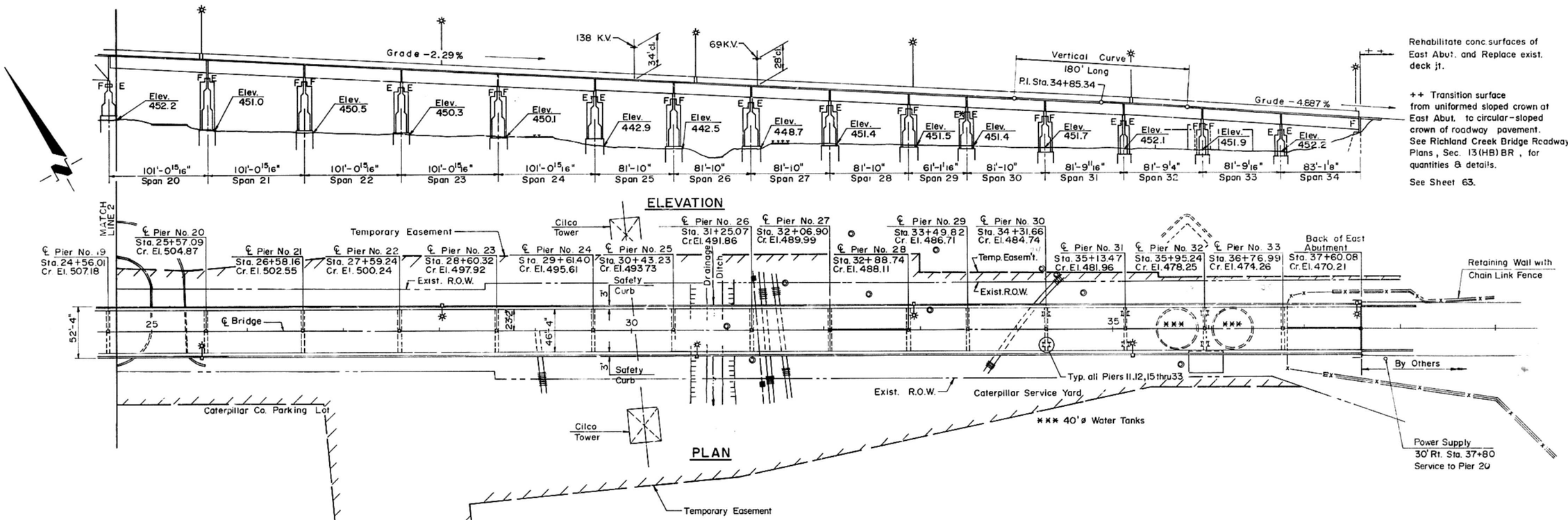

Rehabilitate conc. surfaces of East Abut. and Replace exist. deck jt.

++ Transition surface from uniformed sloped crown at East Abut. to circular-sloped crown of roadway pavement. See Richland Creek Bridge Roadway Plans, Sec. 13(HB) BR, for quantities & details.

See Sheet 63.

TOTAL BILL OF MATERIAL CONTINUED

ITEM	UNIT	QUANTITY
Electrical Cable in Conduit, 600V (XLP-Type USE) 1/C NO. 12	Lin. Ft.	1734
Elec. Cbl. in Cndt. 600V (XPL-Ty. USE) 1/C NO. 6	Lin. Ft.	13,510
Bare Copper Wire, 1/C NO. 6	Lin. Ft.	6,746
Conduit in Trench, 2" Dia., Galvanized Steel	Lin. Ft.	54
Conduit Attached to Structure, 2" Dia. Galvan. Steel	Lin. Ft.	144
Conduit Attached to Structure, 2" Dia. PVC	Lin. Ft.	6,440
Light Pole Aluminum, 45' M.H. 6 Ft. Davit Arm	Each	16
Luminare, Sodium Vapor, Rectilinar Type 150 Watt	Each	One
Luminare, Sodium Vapor, Rectilinar Type 250 Watt	Each	16
Modify Existing Control Installation	Each	One
Removal of Existing Lighting System, Complete	Lump Sum	One
Adjust Existing Light Standard	Each	One

GENERAL PLAN & ELEVATION
SPANS 20-34
CEDAR STREET BRIDGE
F. A. ROUTE 669
(ILL. ROUTES 8, 29, 116)
SECTION 103B-I-4(D)
PEORIA TAZEWELL COUNTIES

MTA, INCORPORATED

DESIGNED J.N. CHECKED G.B.M.
DRAWN R.H.H. DATE 12-11-87 NO. 85-12

Rev 1-27-88

ROUTE NO	SECTION	COUNTY	TOTAL SHEETS	SHEET NO
F.A. 669	⊗	PEORIA TAZEWELL	82	6
FED ROAD DIST NO 7	ILLINOIS	PROJECT [redacted]		
⊗ 103B-I-4(D)		SHEET 4 OF 7?		

ELEVATIONS – WEST APPROACH THRU SPAN 7

NORTH GUTTER

LOCATION	STATION	OFFSET	THEORETICAL GRADE ELEVATIONS	THEORETICAL GRADE ELEV'S ADJ. FOR D.L. DEFLECTION
END APPR. SLAB	0+12.080	24.580	482.438	482.438
A	0+22.080	24.580	482.821	482.821
B	0+32.080	24.580	483.215	483.215
C	0+42.080	24.580	483.620	483.620
D	0+52.080	24.580	484.036	484.036
BACK WEST ABUT.	0+57.580	24.580	484.270	484.270
C.L. WEST ABUT.	0+59.830	24.580	484.366	484.366
E	0+69.830	24.580	484.802	484.818
F	0+79.830	24.580	485.250	485.272
G	0+89.830	24.580	485.708	485.727
C.L. PIER 1	1+03.080	24.580	486.333	486.333
H	1+13.080	24.580	486.818	486.834
I	1+23.080	24.580	487.311	487.333
J	1+33.080	24.580	487.805	487.824
C.L. PIER 2	1+46.830	24.580	488.485	488.485
K	1+56.830	24.580	488.979	488.994
L	1+66.830	24.580	489.473	489.495
M	1+76.830	24.580	489.967	489.985
C.L. PIER 3	1+90.580	24.580	490.646	490.646
N	2+00.580	24.580	491.140	491.155
O	2+10.580	24.580	491.634	491.656
P	2+20.580	24.580	492.128	492.146
C.L. PIER 4	2+34.330	24.580	492.807	492.807
Q	2+44.330	24.580	493.301	493.317
R	2+54.330	24.580	493.795	493.817
S	2+64.330	24.580	494.289	494.308
C.L. PIER 5	2+78.080	24.580	494.968	494.968
T	2+88.080	24.580	495.462	495.478
U	2+98.080	24.580	495.956	495.978
V	3+08.080	24.580	496.450	496.469
C.L. PIER 6	3+21.830	[redacted]	497.130	497.130
W	3+31.830	24.580	497.624	497.639
X	3+41.830	24.580	498.118	498.139
Y	3+51.830	24.580	498.612	498.631
Z	3+61.830	24.580	499.106	499.113
C.L. PIER 7	3+66.830	24.580	499.353	499.353

NORTH AND SOUTH LONGIT. CONST. JOINT

LOCATION	STATION	OFFSET	THEORETICAL GRADE ELEVATIONS	THEORETICAL GRADE ELEV'S ADJ. FOR D.L. DEFLECTION
END APPR. SLAB	0+12.080	21.670	482.499	482.499
A	0+22.080	21.670	482.882	482.882
B	0+32.080	21.670	483.276	483.276
C	0+42.080	21.670	483.681	483.681
D	0+52.080	21.670	484.097	484.097
BACK WEST ABUT.	0+57.580	21.670	484.331	484.331
C.L. WEST ABUT.	0+59.830	21.670	484.427	484.427
E	0+69.830	21.670	484.863	484.879
F	0+79.830	21.670	485.311	485.333
G	0+89.830	21.670	485.769	485.788
C.L. PIER 1	1+03.080	21.670	486.394	486.394
H	1+13.080	21.670	486.879	486.895
I	1+23.080	21.670	487.372	487.394
J	1+33.080	21.670	487.866	487.885
C.L. PIER 2	1+46.830	21.670	488.546	488.546
K	1+56.830	21.670	489.040	489.055
L	1+66.830	21.670	489.534	489.556
M	1+76.830	21.670	490.028	490.046
C.L. PIER 3	1+90.580	21.670	490.707	490.707
N	2+00.580	21.670	491.201	491.216
O	2+10.580	21.670	491.695	491.717
P	2+20.580	21.670	492.189	492.207
C.L. PIER 4	2+34.330	21.670	492.868	492.868
Q	2+44.330	21.670	493.362	493.378
R	2+54.330	21.670	493.856	493.878
S	2+64.330	21.670	494.350	494.369
C.L. PIER 5	2+78.080	21.670	495.029	495.029
T	2+88.080	21.670	495.523	495.539
U	2+98.080	21.670	496.017	496.039
V	3+08.080	21.670	496.511	496.530
C.L. PIER 6	3+21.830	21.670	497.191	497.191
W	3+31.830	21.670	497.685	497.700
X	3+41.830	21.670	498.179	498.200
Y	3+51.830	21.670	498.673	498.692
Z	3+61.830	21.670	499.167	499.174
C.L. PIER 7	3+66.830	21.670	499.414	499.414

BEAMS 1 AND 9

LOCATION	STATION	OFFSET	THEORETICAL GRADE ELEVATIONS	THEORETICAL GRADE ELEV'S ADJ. FOR D.L. DEFLECTION
BACK WEST ABUT.	0+57.580	20.000	484.365	484.365
C.L. WEST ABUT.	0+59.830	20.000	484.461	484.461
E	0+69.830	20.000	484.897	484.913
F	0+79.830	20.000	485.345	485.367
G	0+89.830	20.000	485.803	485.822
C.L. PIER 1	1+03.080	20.000	486.428	486.428
H	1+13.080	20.000	486.913	486.929
I	1+23.080	20.000	487.406	487.428
J	1+33.080	20.000	487.900	487.919
C.L. PIER 2	1+46.830	20.000	488.580	488.580
K	1+56.830	20.000	489.074	489.089
L	1+66.830	20.000	489.568	489.590
M	1+76.830	20.000	490.062	490.080
C.L. PIER 3	1+90.580	20.000	490.741	490.741
N	2+00.580	20.000	491.235	491.250
O	2+10.580	20.000	491.729	491.751
P	2+20.580	20.000	492.223	492.241
C.L. PIER 4	2+34.330	20.000	492.902	492.902
Q	2+44.330	20.000	493.396	493.412
R	2+54.330	20.000	493.890	493.912
S	2+64.330	20.000	494.384	494.403
C.L. PIER 5	2+78.080	20.000	495.063	495.063
T	2+88.080	20.000	495.557	495.573
U	2+98.080	20.000	496.051	496.073
V	3+08.080	20.000	496.545	496.564
C.L. PIER 6	3+21.830	20.000	497.225	497.225
W	3+31.830	20.000	497.719	497.734
X	3+41.830	20.000	498.213	498.234
Y	3+51.830	20.000	498.707	498.726
Z	3+61.830	20.000	499.201	499.208
C.L. PIER 7	3+66.830	20.000	499.448	499.448

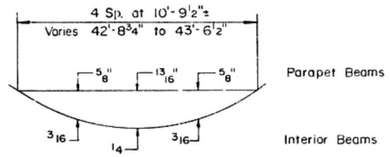

PARAPET AND INTERIOR BEAM SPANS 1-7

DEAD LOAD DEFLECTION DIAGRAM

(Includes weight of Concrete only)

The above interior beam deflections are not to be used if the Engineer is working from the grade elevations adjusted for dead load deflections as shown.

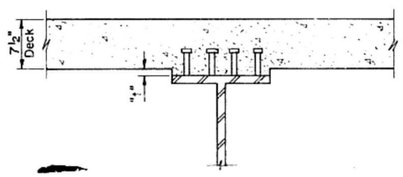

STANDARD FILLET DETAIL

To determine "t" after the existing concrete deck has been removed, elevations of the top flanges of the beams shall be taken at intervals shown on the elevation sheets.
These elevations subtracted from the "Theoretical Grade Elevations Adjusted for Dead Load Deflection" minus deck thickness equals the fillet height "t" above top flange of beams.

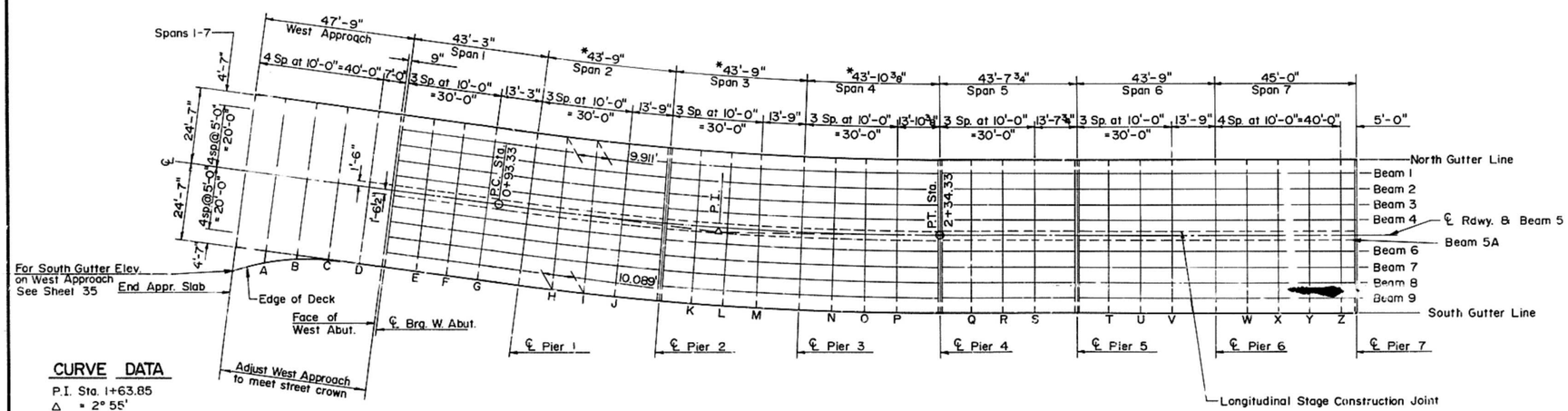

CURVE DATA

P.I. Sta. 1+63.85
Δ = 2° 55'
R = 2770.06
D = 2° 04' 07"
T = 70.52'

PLAN

*Dimensions given along curve at ℄ Cedar Street.

TOP OF OVERLAY ELEVATIONS
WEST APPROACH
TOP OF DECK ELEVATIONS
SPANS 1-7
CEDAR STREET BRIDGE
F.A. RTE. 669 SEC. 103B-I-4(D)
PEORIA-TAZEWELL COUNTIES

MTA, INCORPORATED

DESIGNED J.N. CHECKED G.B.M.
DRAWN K.T.B. DATE 12-11-87 NO. 85-12

ROUTE NO.	SECTION	COUNTY	TOTAL SHEETS	SHEET NO.
FA 669	⊛	PEORIA TAZEWELL	82	7
FED. ROAD DIST. NO. 7		ILLINOIS	PROJECT [redacted]	

⊛103B-1-4(D) SHEET 5 OF 70

ELEVATIONS-WEST APPROACH THRU SPAN 7

BEAMS 2 AND 8

LOCATION	STATION	OFFSET	THEORETICAL GRADE ELEVATIONS	THEORETICAL GRADE ELEV'S ADJ. FOR D.L. DEFLECTION
BACK WEST ABUT.	0+57.580	15.000	484.469	484.469
C.L. WEST ABUT.	0+59.830	15.000	484.565	484.565
E	0+69.830	15.000	485.001	485.017
F	0+79.830	15.000	485.449	485.471
G	0+89.830	15.000	485.907	485.926
C.L. PIER 1	1+03.080	15.000	486.532	486.532
H	1+13.080	15.000	487.017	487.033
I	1+23.080	15.000	487.510	487.532
J	1+33.080	15.000	488.004	488.023
C.L. PIER 2	1+46.830	15.000	488.684	488.684
K	1+56.830	15.000	489.178	489.193
L	1+66.830	15.000	489.672	489.694
M	1+76.830	15.000	490.166	490.184
C.L. PIER 3	1+90.580	15.000	490.845	490.845
N	2+00.580	15.000	491.339	491.354
O	2+10.580	15.000	491.833	491.855
P	2+20.580	15.000	492.327	492.345
C.L. PIER 4	2+34.330	15.000	493.006	493.006
Q	2+44.330	15.000	493.500	493.516
R	2+54.330	15.000	493.994	494.016
S	2+64.330	15.000	494.488	494.507
C.L. PIER 5	2+78.080	15.000	495.167	495.167
T	2+88.080	15.000	495.661	495.677
U	2+98.080	15.000	496.155	496.177
V	3+08.080	15.000	496.649	496.668
C.L. PIER 6	3+21.830	15.000	497.329	497.329
W	3+31.830	15.000	497.823	497.838
X	3+41.830	15.000	498.317	498.338
Y	3+51.830	15.000	498.811	498.830
Z	3+61.830	15.000	499.305	499.312
C.L. PIER 7	3+66.830	15.000	499.552	499.552

BEAMS 3 AND 7

LOCATION	STATION	OFFSET	THEORETICAL GRADE ELEVATIONS	THEORETICAL GRADE ELEV'S ADJ. FOR D.L. DEFLECTION
BACK WEST ABUT.	0+57.580	10.000	484.574	484.574
C.L. WEST ABUT.	0+59.830	10.000	484.670	484.670
E	0+69.830	10.000	485.106	485.122
F	0+79.830	10.000	485.554	485.576
G	0+89.830	10.000	486.012	486.031
C.L. PIER 1	1+03.080	10.000	486.637	486.637
H	1+13.080	10.000	487.122	487.138
I	1+23.080	10.000	487.615	487.637
J	1+33.080	10.000	488.109	488.128
C.L. PIER 2	1+46.830	10.000	488.789	488.789
K	1+56.830	10.000	489.283	489.298
L	1+66.830	10.000	489.777	489.799
M	1+76.830	10.000	490.271	490.289
C.L. PIER 3	1+90.580	10.000	490.950	490.950
N	2+00.580	10.000	491.444	491.459
O	2+10.580	10.000	491.938	491.960
P	2+20.580	10.000	492.432	492.450
C.L. PIER 4	2+34.330	10.000	493.111	493.111
Q	2+44.330	10.000	493.605	493.621
R	2+54.330	10.000	494.099	494.121
S	2+64.330	10.000	494.593	494.612
C.L. PIER 5	2+78.080	10.000	495.272	495.272
[redacted]	2+88.080	10.000	495.766	495.782
U	2+98.080	10.000	496.260	496.282
V	3+08.080	10.000	496.754	496.773
C.L. PIER 6	3+21.830	10.000	497.434	497.434
W	3+31.830	10.000	497.928	497.943
X	3+41.830	10.000	498.422	498.443
Y	3+51.830	10.000	498.916	498.935
Z	3+61.830	10.000	499.410	499.417
C.L. PIER 7	3+66.830	10.000	499.657	499.657

BEAMS 4 AND 6

LOCATION	STATION	OFFSET	THEORETICAL GRADE ELEVATIONS	THEORETICAL GRADE ELEV'S ADJ. FOR D.L. DEFLECTION
BACK WEST ABUT.	0+57.580	5.000	484.678	484.678
C.L. WEST ABUT.	0+59.830	5.000	484.774	484.774
E	0+69.830	5.000	485.210	485.226
F	0+79.830	5.000	485.658	485.680
G	0+89.830	5.000	486.116	486.135
C.L. PIER 1	1+03.080	5.000	486.741	486.741
H	1+13.080	5.000	487.226	487.242
I	1+23.080	5.000	487.719	487.741
J	1+33.080	5.000	488.213	488.232
C.L. PIER 2	1+46.830	5.000	488.893	488.893
K	1+56.830	5.000	489.387	489.402
L	1+66.830	5.000	489.881	489.903
M	1+76.830	5.000	490.375	490.393
C.L. PIER 3	1+90.580	5.000	491.054	491.054
N	2+00.580	5.000	491.548	491.563
O	2+10.580	5.000	492.042	492.064
P	2+20.580	5.000	492.536	492.554
C.L. PIER 4	2+34.330	5.000	493.215	493.215
Q	2+44.330	5.000	493.709	493.725
R	2+54.330	5.000	494.203	494.225
S	2+64.330	5.000	494.697	494.716
C.L. PIER 5	2+78.080	5.000	495.376	495.376
T	2+88.080	5.000	495.870	495.886
U	2+98.080	5.000	496.364	496.386
V	3+08.080	5.000	496.858	496.877
C.L. PIER 6	3+21.830	5.000	497.538	497.538
W	3+31.830	5.000	498.032	498.047
X	3+41.830	5.000	498.526	498.547
Y	3+51.830	5.000	499.020	499.039
Z	3+61.830	5.000	499.514	499.521
C.L. PIER 7	3+66.830	5.000	499.761	499.761

STAGE CONST. JOINT

LOCATION	STATION	OFFSET	THEORETICAL GRADE ELEVATIONS	THEORETICAL GRADE ELEV'S ADJ. FOR D.L. DEFLECTION
~~END APPR. SLAB~~	~~0+12.080~~	~~1.500~~	~~482.919~~	~~482.919~~
~~A~~	~~0+22.080~~	~~1.500~~	~~483.302~~	~~483.302~~
~~B~~	~~0+32.080~~	~~1.500~~	~~483.696~~	~~483.696~~
~~C~~	~~0+42.080~~	~~1.500~~	~~484.101~~	~~484.101~~
~~D~~	~~0+52.080~~	~~1.500~~	~~484.517~~	~~484.517~~
~~BACK WEST ABUT.~~	~~0+57.580~~	~~1.500~~	~~484.751~~	~~484.751~~
C.L. WEST ABUT.	0+59.830	1.500	484.847	484.847
E	0+69.830	1.500	485.283	485.299
F	0+79.830	1.500	485.731	485.753
G	0+89.830	1.500	486.189	486.208
C.L. PIER 1	1+03.080	1.500	486.814	486.814
H	1+13.080	1.500	487.299	487 315
I	1+23.080	1.500	487.792	487.814
J	1+33.080	1.500	488.286	488.305
C.L. PIER 2	1+46.830	1.500	488.966	488.966
K	1+56.830	1.500	489.460	489.475
L	1+66.830	1.500	489.954	489.976
M	1+76.830	1.500	490.448	490.466
C.L. PIER 3	1+90.580	1.500	491.127	491.127
N	2+00.580	1.500	491.621	491.636
O	2+10.580	1.500	492.115	492.137
P	2+20.580	1.500	492.609	492.627
C.L. PIER 4	2+34.330	1.500	493.288	493.288
Q	2+44.330	1.500	493.782	493.798
R	2+54.330	1.500	494.276	494.298
S	2+64.330	1.500	494.770	494.789
C.L. PIER 5	2+78.080	1.500	495.449	495.449
[redacted]	2+88.080	1.500	495.943	495.959
U	2+98.080	1.500	496.437	496.459
V	3+08.080	1.500	496.931	496.950
C.L. PIER 6	3+21.830	1.500	497.611	497.611
W	3+31.830	1.500	498.105	498.120
X	3+41.830	1.500	498.599	498.620
Y	3+51.830	1.500	499.093	499.112
Z	3+61.830	1.500	499.587	499.594
C.L. PIER 7	3+66.830	1.500	499.834	499.834

TOP OF OVERLAY ELEVATIONS
WEST APPROACH
TOP [redacted] DECK ELEVATIONS
SPANS 1-7
CEDAR STREET BRIDGE
F.A. RTE. 669 SEC. 103B-1-4(D)
PEORIA-TAZEWELL COUNTIES

MTA, INCORPORATED

DESIGNED G.C. CHECKED J.N.
DRAWN F.D.J. DATE 12-11-87 NO. 85-12

ROUTE NO.	SECTION	COUNTY	TOTAL SHEETS	SHEET NO.
F.A. 669	⊗	PEORIA TAZEWELL	82	8
FED. ROAD DIST. NO. 7		ILLINOIS	PROJECT [redacted]	
⊗130B-1-4 (D)			SHEET 6 OF 70	

ELEVATIONS-WEST APPROACH THRU SPAN 7

* Elevation at edge of deck, top of concrete overlay. See sheet 35.

℄ RDWY. & BEAM 5

LOCATION	STATION	OFFSET	THEORETICAL GRADE ELEVATIONS	THEORETICAL GRADE ELEV'S ADJ. FOR D.L. DEFLECTION
END APPR. SLAB	0+12.080	0.000	482.950	482.950
A	0+22.080	0.000	483.333	483.333
B	0+32.080	0.000	483.727	483.727
C	0+42.080	0.000	484.132	484.132
D	0+52.080	0.000	484.548	484.548
BACK WEST ABUT.	0+57.580	0.000	484.782	484.782
C.L. WEST ABUT.	0+59.830	0.000	484.878	484.878
E	0+69.830	0.000	485.314	485.330
F	0+79.830	0.000	485.762	485.784
G	0+89.830	0.000	486.220	486.239
C.L. PIER 1	1+03.080	0.000	486.845	486.845
H	1+13.080	0.000	487.330	487.346
I	1+23.080	0.000	487.823	487.845
J	1+33.080	0.000	488.317	488.336
C.L. PIER 2	1+46.830	0.000	488.997	488.997
K	1+56.830	0.000	489.491	489.506
L	1+66.830	0.000	489.985	490.007
M	1+76.830	0.000	490.479	490.497
C.L. PIER 3	1+90.580	0.000	491.158	491.158
N	2+00.580	0.000	491.652	491.667
O	2+10.580	0.000	492.146	492.168
P	2+20.580	0.000	492.640	492.658
C.L. PIER 4	2+34.330	0.000	493.319	493.319
Q	2+44.330	0.000	493.813	493.829
R	2+54.330	0.000	494.307	494.329
S	2+64.330	0.000	494.801	494.820
C.L. PIER 5	2+78.080	0.000	495.480	495.480
T	2+88.080	0.000	495.974	495.990
U	2+98.080	0.000	496.468	496.490
V	3+08.080	0.000	496.962	496.981
C.L. PIER 6	3+21.830	0.000	497.642	497.642
W	3+31.830	0.000	498.136	498.151
X	3+41.830	0.000	498.630	498.651
Y	3+51.830	0.000	499.124	499.143
Z	3+61.830	0.000	499.618	499.625
C.L. PIER 7	3+66.830	0.000	499.865	499.865

BEAM 5A

LOCATION	STATION	OFFSET	THEORETICAL GRADE ELEVATIONS	THEORETICAL GRADE ELEV'S ADJ. FOR D.L. DEFLECTION
BACK WEST ABUT.	0+57.580	-1.540	484.751	484.751
C.L. WEST ABUT.	0+59.830	-1.540	484.847	484.847
E	0+69.830	-1.540	485.283	485.299
F	0+79.830	-1.540	485.731	485.753
G	0+89.830	-1.540	486.189	486.208
C.L. PIER 1	1+03.080	-1.540	486.814	486.814
H	1+13.080	-1.540	487.299	487.315
I	1+23.080	-1.540	487.792	487.814
J	1+33.080	-1.540	488.286	488.305
C.L. PIER 2	1+46.830	-1.540	488.966	488.966
K	1+56.830	-1.540	489.460	489.475
L	1+66.830	-1.540	489.954	489.976
M	1+76.830	-1.540	490.448	490.466
C.L. PIER 3	1+90.580	-1.540	491.127	491.127
N	2+00.580	-1.540	491.621	491.636
O	2+10.580	-1.540	492.115	492.137
P	2+20.580	-1.540	492.609	492.627
C.L. PIER 4	2+34.330	-1.540	493.288	493.288
Q	2+44.330	-1.540	493.782	493.798
R	2+54.330	-1.540	494.276	494.298
S	2+64.330	-1.540	494.770	494.789
C.L. PIER 5	2+78.080	-1.540	495.449	495.449
T	2+88.080	-1.540	495.943	495.959
U	2+98.080	-1.540	496.437	496.459
V	3+08.080	-1.540	496.931	496.950
C.L. PIER 6	3+21.830	-1.540	497.611	497.611
W	3+31.830	-1.540	498.105	498.120
X	3+41.830	-1.540	498.599	498.620
Y	3+51.830	-1.540	499.093	499.112
Z	3+61.830	-1.540	499.587	499.594
C.L. PIER 7	3+66.830	-1.540	499.834	499.834

SOUTH GUTTER LINE

LOCATION	STATION	OFFSET	THEORETICAL GRADE ELEVATIONS	THEORETICAL GRADE ELEV'S ADJ. FOR D.L. DEFLECTION
END APPR. SLAB	0+12.080	-35.350	482.214	482.214*
A	0+22.080	-29.204	482.725	483.725*
B	0+32.080	-25.805	483.189	483.189*
C	0+42.080	-24.590	483.620	483.620
D	0+52.080	-24.580	484.036	484.036
BACK WEST ABUT.	0+57.580	-24.580	484.270	484.270
C.L. WEST ABUT.	0+59.830	-24.580	484.366	484.366
E	0+69.830	-24.580	484.802	484.818
F	0+79.830	-24.580	485.250	485.272
G	0+89.830	-24.580	485.708	485.727
C.L. PIER 1	1+03.080	-24.580	486.333	486.333
H	1+13.080	-24.580	486.818	486.834
I	1+23.080	-24.580	487.311	487.333
J	1+33.080	-24.580	487.805	487.824
C.L. PIER 2	1+46.830	-24.580	488.485	488.485
K	1+56.830	-24.580	488.979	488.994
L	1+66.830	-24.580	489.473	489.495
M	1+76.830	-24.580	489.967	489.985
C.L. PIER 3	1+90.580	-24.580	490.646	490.646
N	2+00.580	-24.580	491.140	491.155
O	2+10.580	-24.580	491.634	491.656
P	2+20.580	-24.580	492.128	492.146
C.L. PIER 4	2+34.330	-24.580	492.807	492.807
Q	2+44.330	-24.580	493.301	493.317
R	2+54.330	-24.580	493.795	493.817
S	2+64.330	-24.580	494.289	494.308
C.L. PIER 5	2+78.080	-24.580	494.968	494.968
T	2+88.080	-24.580	495.462	495.478
U	2+98.080	-24.580	495.956	495.978
V	3+08.080	-24.580	496.450	496.469
C.L. PIER 6	3+21.830	-24.580	497.130	497.130
W	3+31.830	-24.580	497.624	497.639
X	3+41.830	-24.580	498.118	498.139
Y	3+51.830	-24.580	498.612	498.631
Z	3+61.830	-24.580	499.106	499.113
C.L. PIER 7	3+66.830	-24.580	499.353	499.353

TOP OF OVERLAY ELEVATIONS
WEST APPROACH
TOP OF DECK ELEVATIONS
SPANS 1-7
CEDAR STREET BRIDGE
F.A. RTE. 669 SEC. 103B-1-4(D)
PEORIA-TAZEWELL COUNTIES

MTA, INCORPORATED

DESIGNED G.C. CHECKED J.N.
DRAWN F.D.J. DATE 12-11-87 NO. 85-12

ROUTE NO	SECTION	COUNTY	TOTAL SHEETS	SHEET NO
F.A. 669	⊗	PEORIA TAZEWELL	82	9
FED ROAD DIST NO 7		ILLINOIS	PROJECT	[redacted]

⊗ 103B-I-4(D) SHEET 7 OF 70

ELEVATIONS – SPANS 8 – 10

NORTH AND SOUTH GUTTER LINE

LOCATION	STATION	OFFSET	THEORETICAL GRADE ELEVATIONS	THEORETICAL GRADE ELEV'S ADJ. FOR D.L. DEFLECTION
C.L. PIER 7	3+66.830	24.580	499.353	499.353
AA	3+76.830	24.580	499.847	499.866
AB	3+86.830	24.580	500.341	500.380
AC	3+96.830	24.580	500.835	500.894
AD	4+06.830	24.580	501.329	501.400
AE	4+16.830	24.580	501.823	501.902
AF	4+26.830	24.580	502.317	502.404
AG	4+36.830	24.580	502.811	502.901
AH	4+46.830	24.580	503.305	503.387
AI	4+56.830	24.580	503.799	503.873
AJ	4+66.830	24.580	504.293	504.359
AK	4+76.830	24.580	504.787	504.834
AL	4+86.830	24.580	505.281	505.308
C.L. PIER 8 *	5+02.082	24.580	506.034	506.034
AM	5+10.830	24.580	506.466	506.476
AN	5+20.830	24.580	506.960	506.979
AO	5+30.830	24.580	507.454	507.479
AP	5+40.830	24.580	507.948	507.977
AQ	5+50.830	24.580	508.442	508.470
AR	5+60.830	24.580	508.936	508.960
AS	5+70.830	24.580	509.430	509.448
AT	5+80.830	24.580	509.924	509.932
C.L. PIER 9	5+89.000	24.580	510.328	510.328
AU	5+99.000	24.580	510.822	510.831
AV	6+09.000	24.580	511.316	511.334
AW	6+19.000	24.580	511.810	511.837
AX	6+29.000	24.580	512.304	512.340
AY	6+39.000	24.580	512.798	512.838
AZ	6+49.000	24.580	513.292	513.336
BA	6+59.000	24.580	513.786	513.833
BB	6+69.000	24.580	514.280	514.331
BC	6+79.000	24.580	514.774	514.823
BD	6+89.000	24.580	515.268	515.314
BE	6+99.000	24.580	515.762	515.804
BF	7+09.000	24.580	516.256	516.294
BG	7+19.000	24.580	516.750	516.782
BH	7+29.000	24.580	517.244	517.267
BI	7+39.000	24.580	517.738	517.752
BJ	7+49.000	24.580	518.232	518.237
C.L. PIER 10	7+54.750	24.580	518.516	518.516

* Stations and offsets shown are for lines left of centerline.
For lines right of centerline, see Table I and Reference Diagram on sheet 9.

LONGIT. CONST. JOINT

LOCATION	STATION	OFFSET	THEORETICAL GRADE ELEVATIONS	THEORETICAL GRADE ELEV'S ADJ. FOR D.L. DEFLECTION
C.L. PIER 7	3+66.830	21.670	499.414	499.414
AA	3+76.830	21.670	499.908	499.927
AB	3+86.830	21.670	500.402	500.441
AC	3+96.830	21.670	500.896	500.955
AD	4+06.830	21.670	501.390	501.461
AE	4+16.830	21.670	501.884	501.963
AF	4+26.830	21.670	502.378	502.465
AG	4+36.830	21.670	502.872	502.962
AH	4+46.830	21.670	503.366	503.448
AI	4+56.830	21.670	503.860	503.934
AJ	4+66.830	21.670	504.354	504.420
AK	4+76.830	21.670	504.848	504.895
AL	4+86.830	21.670	505.342	505.369
C.L. PIER 8 *	5+01.934	21.670	506.088	506.088
AM	5+10.830	21.670	506.527	506.537
AN	5+20.830	21.670	507.021	507.040
AO	5+30.830	21.670	507.515	507.540
AP	5+40.830	21.670	508.009	508.038
AQ	5+50.830	21.670	508.503	508.531
AR	5+60.830	21.670	508.997	509.021
AS	5+70.830	21.670	509.491	509.509
AT	5+80.830	21.670	509.985	509.993
C.L. PIER 9	5+89.000	21.670	510.389	510.389
AU	5+99.000	21.670	510.883	510.892
AV	6+09.000	21.670	511.377	511.395
AW	6+19.000	21.670	511.871	511.898
AX	6+29.000	21.670	512.365	512.401
AY	6+39.000	21.670	512.869	512.899
AZ	6+49.000	21.670	513.353	513.397
BA	6+59.000	21.670	513.847	513.894
BB	6+69.000	21.670	514.341	514.392
BC	6+79.000	21.670	514.835	514.884
BD	6+89.000	21.670	515.329	515.375
BE	6+99.000	21.670	515.823	515.865
BF	7+09.000	21.670	516.317	516.355
BG	7+19.000	21.670	516.811	516.843
BH	7+29.000	21.670	517.305	517.328
BI	7+39.000	21.670	517.799	517.813
BJ	7+49.000	21.670	518.293	518.298
C.L. PIER 10	7+54.750	21.670	518.577	518.577

STRINGERS 1 AND 7

LOCATION	STATION	OFFSET	THEORETICAL GRADE ELEVATIONS	THEORETICAL GRADE ELEV'S ADJ. FOR D.L. DEFLECTION
C.L. PIER 7	3+66.830	20.000	499.448	499.448
AA	3+76.830	20.000	499.942	499.961
AB	3+86.830	20.000	500.436	500.475
AC	3+96.830	20.000	500.930	500.989
AD	4+06.830	20.000	501.424	501.495
AE	4+16.830	20.000	501.918	501.997
AF	4+26.830	20.000	502.412	502.499
AG	4+36.830	20.000	502.906	502.996
AH	4+46.830	20.000	503.400	503.482
AI	4+56.830	20.000	503.894	503.968
AJ	4+66.830	20.000	504.388	504.454
AK	4+76.830	20.000	504.882	504.929
AL	4+86.830	20.000	505.376	505.403
C.L. PIER 8 *	5+01.849	20.000	506.118	506.118
AM	5+10.830	20.000	506.561	506.571
AN	5+20.830	20.000	507.055	507.074
AO	5+30.830	20.000	507.549	507.574
AP	5+40.830	20.000	508.043	508.072
AQ	5+50.830	20.000	508.537	508.565
AR	5+60.830	20.000	509.031	509.055
AS	5+70.830	20.000	509.525	509.543
AT	5+80.830	20.000	510.019	510.027
C.L. PIER 9	5+89.000	20.000	510.423	510.423
AU	5+99.000	20.000	510.917	510.926
AV	6+09.000	20.000	511.411	511.429
AW	6+19.000	20.000	511.905	511.932
AX	6+29.000	20.000	512.399	512.435
AY	6+39.000	20.000	512.893	512.933
AZ	6+49.000	20.000	513.387	513.431
BA	6+59.000	20.000	513.881	513.928
BB	6+69.000	20.000	514.375	514.426
BC	6+79.000	20.000	514.869	514.918
BD	6+89.000	20.000	515.363	515.409
BE	6+99.000	20.000	515.857	515.899
BF	7+09.000	20.000	516.351	516.389
BG	7+19.000	20.000	516.845	516.877
BH	7+29.000	20.000	517.339	517.362
BI	7+39.000	20.000	517.833	517.847
BJ	7+49.000	20.000	518.327	518.332
C.L. PIER 10	7+54.750	20.000	518.611	518.611

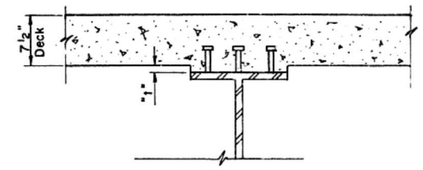

STANDARD FILLET DETAIL

To determine "t" after the existing concrete deck has been removed, elevations of the top flanges of the existing stringers, girders, or trusses shall be taken at intervals shown on the elevation sheets. These elevations subtracted from the "Theoretical Grade Elevations Adjusted for Dead Load Deflections" minus deck thickness equals the fillet height "t" above top flange of beams.

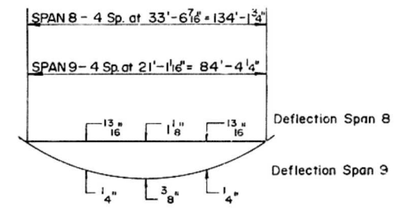

DEAD LOAD DEFLECTION DIAGRAM

(Includes Weight of Concrete only)

For Span 10 Deflection See Sheet 10.
Individual stringer and concrete edge beam deflection between panel points equals 1/16" max., negligible.
The above deflections are not to be used in the field if the Engineer is working from the Grade Elevations Adjusted for Dead Load Deflection as shown.

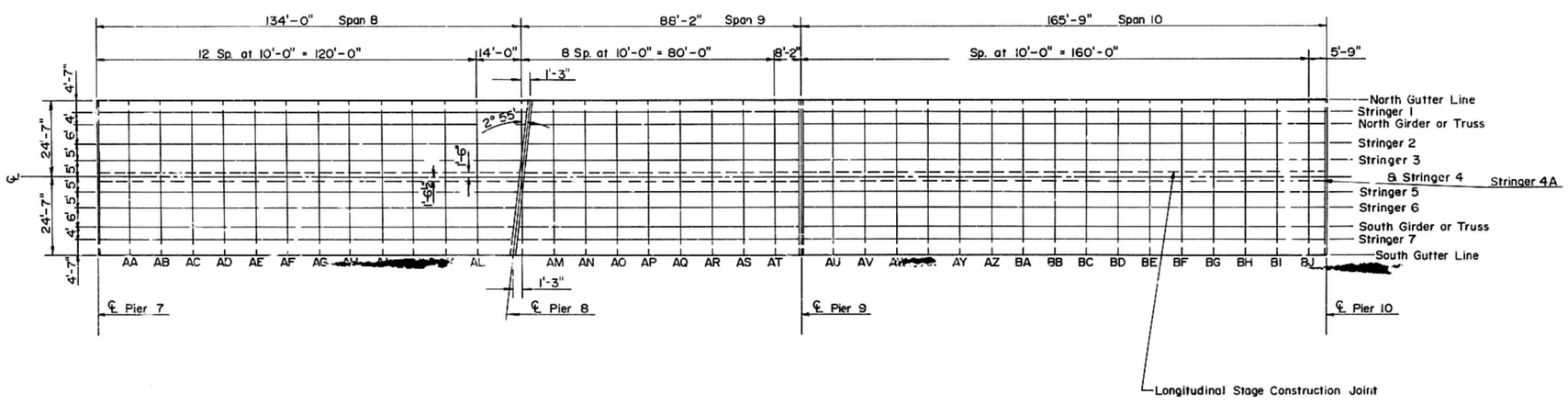

PLAN

TOP OF DECK ELEVATIONS
SPANS 8-10
CEDAR STREET BRIDGE
F.A. RTE. 669 SEC. 103B-I-4(D)
PEORIA-TAZEWELL COUNTIES

MTA, INCORPORATED

DESIGNED J.N. CHECKED G.B.M.
DRAWN K.T.B. DATE 12-11-87 NO. 85-12

ROUTE NO.	SECTION	COUNTY	TOTAL SHEETS	SHEET NO
F.A. 669	⊛	PEORIA TAZEWELL	82	10
FED. ROAD DIST. NO. 7		ILLINOIS	PROJECT	

⊛103B-1-4(D) SHEET 8 OF 70

ELEVATIONS - SPANS 8-10

NO. & SO. TRUSSES OR GIRDERS

LOCATION	STATION	OFFSET	THEORETICAL GRADE ELEVATIONS	THEORETICAL GRADE ELEV'S ADJ. FOR D.L. DEFLECTION
C.L. PIER 7	3+66.830	16.000	499.532	499.532
AA	3+76.830	16.000	500.026	500.045
AB	3+86.830	16.000	500.520	500.559
AC	3+96.830	16.000	501.014	501.073
AD	4+06.830	16.000	501.508	501.579
AE	4+16.830	16.000	502.002	502.081
AF	4+26.830	16.000	502.496	502.583
AG	4+36.830	16.000	502.990	503.080
AH	4+46.830	16.000	503.484	503.566
AI	4+56.830	16.000	503.978	504.052
AJ	4+66.830	16.000	504.472	504.539
AK	4+76.830	16.000	504.966	505.013
AL	4+86.830	16.000	505.460	505.487
C.L. PIER 8 *	5+01.645	16.000	506.192	506.192
AM	5+10.830	16.000	506.645	506.655
AN	5+20.830	16.000	507.139	507.158
AO	5+30.830	16.000	507.633	507.658
AP	5+40.830	16.000	508.127	508.156
AQ	5+50.830	16.000	508.621	508.649
AR	5+60.830	16.000	509.115	509.139
AS	5+70.830	16.000	509.609	509.627
AT	5+80.830	16.000	510.103	510.111
C.L. PIER 9	5+89.000	16.000	510.507	510.507
AU	5+99.000	16.000	511.001	511.010
AV	6+09.000	16.000	511.495	511.513
AW	6+19.000	16.000	511.989	512.016
AX	6+29.000	16.000	512.483	512.519
AY	6+39.000	16.000	512.977	513.017
AZ	6+49.000	16.000	513.471	513.515
BA	6+59.000	16.000	513.965	514.012
BB	6+69.000	16.000	514.459	514.510
BC	6+79.000	16.000	514.953	515.002
BD	6+89.000	16.000	515.447	515.493
BE	6+99.000	16.000	515.941	515.983
BF	7+09.000	16.000	516.435	516.473
BG	7+19.000	16.000	516.929	516.961
BH	7+29.000	16.000	517.423	517.446
BI	7+39.000	16.000	517.917	517.931
BJ	7+49.000	16.000	518.411	518.416
C.L. PIER 10	7+54.750	16.000	518.695	518.695

* Stations and offsets shown are for lines left centerline.
For lines right of centerline, see Table I and Reference Diagram on sheet 9.

STRINGERS 2 AND 6

LOCATION	STATION	OFFSET	THEORETICAL GRADE ELEVATIONS	THEORETICAL GRADE ELEV'S ADJ. FOR D.L. DEFLECTION
C.L. PIER 7	3+66.830	10.000	499.657	499.657
AA	3+76.830	10.000	500.151	500.170
AB	3+86.830	10.000	500.645	500.684
AC	3+96.830	10.000	501.139	501.198
AD	4+06.830	10.000	501.633	501.704
AE	4+16.830	10.000	502.127	502.206
AF	4+26.830	10.000	502.621	502.708
AG	4+36.830	10.000	503.115	503.205
AH	4+46.830	10.000	503.609	503.691
AI	4+56.830	10.000	504.103	504.177
AJ	4+66.830	10.000	504.597	504.663
AK	4+76.830	10.000	505.091	505.138
AL	4+86.830	10.000	505.585	505.612
C.L. PIER 8 *	5+01.740	10.000	506.301	506.301
AM	5+10.830	10.000	506.770	506.780
AN	5+20.830	10.000	507.264	507.283
AO	5+30.830	10.000	507.758	507.783
AP	5+40.830	10.000	508.252	508.281
AQ	5+50.830	10.000	508.746	508.774
AR	5+60.830	10.000	509.240	509.264
AS	5+70.830	10.000	509.734	509.752
AT	5+80.830	10.000	510.228	510.236
C.L. PIER 9	5+89.000	10.000	510.632	510.632
AU	5+99.000	10.000	511.126	511.135
AV	6+09.000	10.000	511.620	511.638
AW	6+19.000	10.000	512.114	512.141
AX	6+29.000	10.000	512.608	512.644
AY	6+39.000	10.000	513.102	513.142
AZ	6+49.000	10.000	513.596	513.640
BA	6+59.000	10.000	514.090	514.137
BB	6+69.000	10.000	514.584	514.635
BC	6+79.000	10.000	515.078	515.127
BD	6+89.000	10.000	515.572	515.618
BE	6+99.000	10.000	516.066	516.108
BF	7+09.000	10.000	516.560	516.598
BG	7+19.000	10.000	517.054	517.086
BH	7+29.000	10.000	517.548	517.571
BI	7+39.000	10.000	518.042	518.056
BJ	7+49.000	10.000	518.536	518.541
C.L. PIER 10	7+54.750	10.000	518.820	518.820

STRINGERS 3 AND 5

LOCATION	STATION	OFFSET	THEORETICAL GRADE ELEVATIONS	THEORETICAL GRADE ELEV'S ADJ. FOR D.L. DEFLECTION
C.L. PIER 7	3+66.830	5.000	499.761	499.761
AA	3+76.830	5.000	500.255	500.274
AB	3+86.830	5.000	500.749	500.788
AC	3+96.830	5.000	501.243	501.302
AD	4+06.830	5.000	501.737	501.808
AE	4+16.830	5.000	502.231	502.310
AF	4+26.830	5.000	502.725	502.812
AG	4+36.830	5.000	503.219	503.309
AH	4+46.830	5.000	503.713	503.795
AI	4+56.830	5.000	504.207	504.281
AJ	4+66.830	5.000	504.701	504.767
AK	4+76.830	5.000	505.195	505.242
AL	4+86.830	5.000	505.689	505.716
C.L. PIER 8 *	5+01.085	5.000	506.393	506.393
AM	5+10.830	5.000	506.874	506.884
AN	5+20.830	5.000	507.368	507.387
AO	5+30.830	5.000	507.862	507.887
AP	5+40.830	5.000	508.356	508.385
AQ	5+50.830	5.000	508.850	508.873
AR	5+60.830	5.000	509.344	509.368
AS	5+70.830	5.000	509.838	509.856
AT	5+80.830	5.000	510.332	510.340
C.L. PIER 9	5+89.000	5.000	510.736	510.736
AU	5+99.000	5.000	511.230	511.239
AV	6+09.000	5.000	511.724	511.742
AW	6+19.000	5.000	512.218	512.245
AX	6+29.000	5.000	512.712	512.748
AY	6+39.000	5.000	513.206	513.246
AZ	6+49.000	5.000	513.700	513.744
BA	6+59.000	5.000	514.194	514.241
BB	6+69.000	5.000	514.688	514.739
BC	6+79.000	5.000	515.182	515.231
BD	6+89.000	5.000	515.676	515.722
BE	6+99.000	5.000	516.170	516.212
BF	7+09.000	5.000	516.664	516.702
BG	7+19.000	5.000	517.158	517.190
BH	7+29.000	5.000	517.652	517.675
BI	7+39.000	5.000	518.146	518.160
BJ	7+49.000	5.000	518.640	518.645
C.L. PIER 10	7+54.750	5.000	518.924	518.924

TOP OF DECK ELEVATIONS
SPANS 8-10
CEDAR STREET BRIDGE
F.A. RTE. 669 SEC. 103B-1-4(D)
PEORIA-TAZEWELL COUNTIES

MTA, INCORPORATED

DESIGNED G.C. CHECKED J.N.
DRAWN F.D.J. DATE 12-11-87 NO. 85-12

ROUTE NO	SECTION	COUNTY	TOTAL SHEETS	SHEET NO
FA 669	⊛	PEORIA TAZEWELL	82	11
FED. ROAD DIST. NO. 7		ILLINOIS	PROJECT	

⊛ 103B-1-4(D) SHEET 9 OF 70

ELEVATIONS-SPANS 8-10

STAGE CONSTR. JOINT

LOCATION	STATION	OFFSET	THEORETICAL GRADE ELEVATIONS	THEORETICAL GRADE ELEV'S ADJ. FOR D.L. DEFLECTION
C.L. PIER 7	3+66.830	1.500	499.834	499.834
AA	3+76.830	1.500	500.328	500.347
AB	3+86.830	1.500	500.822	500.861
AC	3+96.830	1.500	501.316	501.375
AD	4+06.830	1.500	501.810	501.881
AE	4+16.830	1.500	502.304	502.383
AF	4+26.830	1.500	502.798	502.885
AG	4+36.830	1.500	503.292	503.382
AH	4+46.830	1.500	503.786	503.868
AI	4+56.830	1.500	504.280	504.354
AJ	4+66.830	1.500	504.774	504.840
AK	4+76.830	1.500	505.268	505.315
AL	4+86.830	1.500	505.762	505.789
C.L. PIER 8 *	5+00.906	1.500	506.457	506.457
AM	5+10.830	1.500	506.947	506.957
AN	5+20.830	1.500	507.441	507.460
AO	5+30.830	1.500	507.935	507.960
AP	5+40.830	1.500	508.429	508.458
AQ	5+50.830	1.500	508.923	508.951
AR	5+60.830	1.500	509.417	509.441
AS	5+70.830	1.500	509.911	509.929
AT	5+80.830	1.500	510.405	510.413
C.L. PIER 9	5+89.000	1.500	510.809	510.809
AU	5+99.000	1.500	511.303	511.312
AV	6+09.000	1.500	511.797	511.815
AW	6+19.000	1.500	512.291	512.318
AX	6+29.000	1.500	512.785	512.821
AY	6+39.000	1.500	513.279	513.319
AZ	6+49.000	1.500	513.773	513.817
BA	6+59.000	1.500	514.267	514.314
BB	6+69.000	1.500	514.761	514.812
BC	6+79.000	1.500	515.255	515.304
BD	6+89.000	1.500	515.749	515.795
BE	6+99.000	1.500	516.243	516.285
BF	7+09.000	1.500	516.737	516.775
BG	7+19.000	1.500	517.231	517.263
BH	7+29.000	1.500	517.725	517.748
BI	7+39.000	1.500	518.219	518.233
BJ	7+49.000	1.500	518.713	518.718
C.L. PIER 10	7+54.750	1.500	518.997	518.997

℄ RDWY. & STRINGER 4

LOCATION	STATION	OFFSET	THEORETICAL GRADE ELEVATIONS	THEORETICAL GRADE ELEV'S ADJ. FOR D.L. DEFLECTION
C.L. PIER 7	3+66.830	0.000	499.865	499.865
AA	3+76.830	0.000	500.359	500.378
AB	3+86.830	0.000	500.853	500.892
AC	3+96.830	0.000	501.347	501.406
AD	4+06.830	0.000	501.841	501.912
AE	4+16.830	0.000	502.335	502.414
AF	4+26.830	0.000	502.829	502.916
AG	4+36.830	0.000	503.323	503.413
AH	4+46.830	0.000	503.817	503.899
AI	4+56.830	0.000	504.311	504.385
AJ	4+66.830	0.000	504.805	504.871
AK	4+76.830	0.000	505.299	505.346
AL	4+86.830	0.000	505.793	505.820
C.L. PIER 8 *	5+00.830	0.000	506.484	506.484
AM	5+10.830	0.000	506.978	506.988
AN	5+20.830	0.000	507.472	507.491
AO	5+30.830	0.000	507.966	507.991
AP	5+40.830	0.000	508.460	508.489
AQ	5+50.830	0.000	508.954	508.982
AR	5+60.830	0.000	509.448	509.472
AS	5+70.830	0.000	509.942	509.960
AT	5+80.830	0.000	510.436	510.444
C.L. PIER 9	5+89.000	0.000	510.840	510.840
AU	5+99.000	0.000	511.334	511.343
AV	6+09.000	0.000	511.828	511.846
AW	6+19.000	0.000	512.322	512.349
AX	6+29.000	0.000	512.816	512.852
AY	6+39.000	0.000	513.310	513.350
AZ	6+49.000	0.000	513.804	513.848
BA	6+59.000	0.000	514.298	514.345
BB	6+69.000	0.000	514.792	514.843
BC	6+79.000	0.000	515.286	515.335
BD	6+89.000	0.000	515.780	515.826
BE	6+99.000	0.000	516.274	516.316
BF	7+09.000	0.000	516.768	516.806
BG	7+19.000	0.000	517.262	517.294
BH	7+29.000	0.000	517.756	517.779
BI	7+39.000	0.000	518.250	518.264
BJ	7+49.000	[redacted]	518.744	518.749
C.L. PIER 10	7+54.750	0.000	519.028	519.028

STRINGER 4A

LOCATION	STATION	OFFSET	THEORETICAL GRADE ELEVATIONS	THEORETICAL GRADE ELEV'S ADJ. FOR D.L. DEFLECTION
C.L. PIER 7	3+66.830	-1.540	499.834	499.834
AA	3+76.830	-1.540	500.328	500.347
AB	3+86.830	-1.540	500.822	500.861
AC	3+96.830	-1.540	501.316	501.375
AD	4+06.830	-1.540	501.810	501.881
AE	4+16.830	-1.540	502.304	502.383
AF	4+26.830	-1.540	502.798	502.885
AG	4+36.830	-1.540	503.292	503.382
AH	4+46.830	-1.540	503.786	503.868
AI	4+56.830	-1.540	504.280	504.354
AJ	4+66.830	-1.540	504.774	504.840
AK	4+76.830	-1.540	505.268	505.315
AL	4+86.830	-1.540	505.762	505.789
C.L. PIER 8 *	5+00.752	-1.540	506.449	506.449
AM	5+10.830	-1.540	506.947	506.957
AN	5+20.830	-1.540	507.441	507.460
AO	5+30.830	-1.540	507.935	507.960
AP	5+40.830	-1.540	508.429	508.458
AQ	5+50.830	-1.540	508.923	508.951
AR	5+60.830	-1.540	509.417	509.441
AS	5+70.830	-1.540	509.911	509.929
AT	5+80.830	-1.540	510.405	510.413
C.L. PIER 9	5+89.000	-1.540	510.809	510.809
AU	5+99.000	-1.540	511.303	511.312
AV	6+09.000	-1.540	511.797	511.815
AW	6+19.000	-1.540	512.291	512.318
AX	6+29.000	-1.540	512.785	512.821
AY	6+39.000	-1.540	513.279	513.319
AZ	6+49.000	-1.540	513.773	513.817
BA	6+59.000	-1.540	514.267	514.314
BB	6+69.000	-1.540	514.761	514.812
BC	6+79.000	-1.540	515.255	515.304
BD	6+89.000	-1.540	515.749	515.795
BE	6+99.000	-1.540	516.243	516.285
BF	7+09.000	-1.540	516.737	516.775
BG	7+19.000	-1.540	517.231	517.263
BH	7+29.000	-1.540	517.725	517.748
BI	7+39.000	-1.540	518.219	518.233
BJ	7+49.000	-1.540	518.713	[redacted]
C.L. PIER 10	7+54.750	-1.540	518.997	518.997

TABLE 1

TOP OF DECK ELEVATIONS @ PIER 8, RIGHT OF RDWY. CENTERLINE

LOCATION	STATION	OFFSET	THEORETICAL GRADE ELEVATIONS	THEORETICAL GRADE ELEV'S ADJ. FOR D.L. DEFLECTION
C.L. PIER 8 @ So. Gutter Line	4+99.578	-24.580	505.910	505.910
~~C.L. PIER 8 @ Long. Const. Joint~~	~~4+99.726~~	~~-21.670~~	~~505.979~~	~~505.979~~
C.L. PIER 8 @ Stringer 7	4+99.810	-20.000	506.017	506.017
C.L. PIER 8 @ So. Girder	5+00.015	-16.000	506.111	506.111
C.L. PIER 8 @ Stringer 6	5+00.320	-10.000	506.251	506.251
C.L. PIER 8 @ Stringer 5	5+00.575	-5.000	506.368	506.368

For Stringer 4A station and offset, see column this sheet.

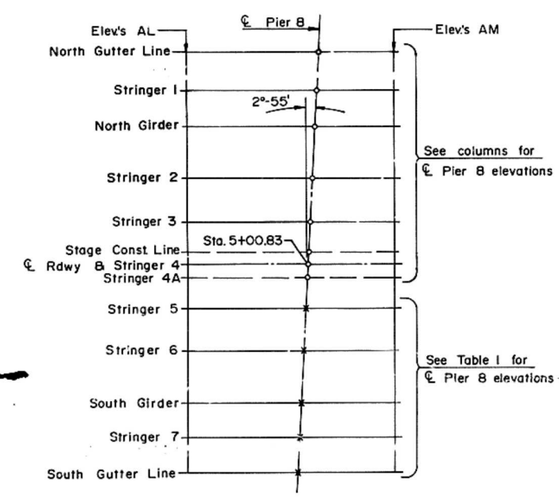

REFERENCE DIAGRAM

Top of deck elevations at Pier 8.

TOP OF DECK ELEVATIONS
SPANS 8-10
CEDAR STREET BRIDGE
F.A. RTE. 669 SEC. 103B-1-4(D)
PEORIA-TAZEWELL COUNTIES

MTA, INCORPORATED

DESIGNED G.C. CHECKED J.N.
DRAWN F.D.J. DATE 12-1-87 NO. 85-12

ROUTE NO	SECTION	COUNTY	TOTAL SHEETS	SHEET NO
F.A. 669	⊗	PEORIA TAZEWELL	82	12
FED ROAD DIST NO 7	ILLINOIS	PROJECT		
⊗ 103B-I-4(D)		SHEET 10 OF 70		

ELEVATIONS — SPANS 11 – 13

NORTH AND SOUTH GUTTER LINE

LOCATION	STATION	OFFSET	THEORETICAL GRADE ELEVATIONS	THEORETICAL GRADE ELEV'S ADJ. FOR D.L. DEFLECTION
C.L. PIER 10	7+54.750	24.580	518.516	518.516
BK	7+64.750	24.580	519.010	519.019
BL	7+74.750	24.580	519.504	519.522
BM	7+84.750	24.580	519.998	520.025
BN	7+94.750	24.580	520.492	520.527
BO	8+04.750	24.580	520.986	521.026
BP	8+14.750	24.580	521.480	521.524
BQ	8+24.750	24.580	521.974	522.021
BR	8+34.750	24.580	522.468	522.519
BS	8+44.750	24.580	522.962	523.012
BT	8+54.750	24.580	523.456	523.502
BU	8+64.750	24.580	523.950	523.992
BV	8+74.750	24.580	524.444	524.483
BW	8+84.750	24.580	524.938	524.971
BX	8+94.750	24.580	525.432	525.456
BY	9+04.750	24.580	525.926	525.941
BZ	9+14.750	24.580	526.420	526.426
C.L. PIER 11	9+21.750	24.580	526.766	526.766
CA	9+31.750	24.580	527.260	527.269
CB	9+41.750	24.580	527.754	527.771
CC	9+51.750	24.580	528.248	528.274
CD	9+61.750	24.580	528.742	528.777
CE	9+71.750	24.580	529.236	529.276
CF	9+81.750	24.580	529.730	529.773
CG	9+91.750	24.580	530.224	530.271
CH	10+01.750	24.580	530.718	530.768
CI	10+11.750	24.580	531.212	531.261
CJ	10+21.750	24.580	531.706	531.752
CK	10+31.750	24.580	532.200	532.242
CL	10+41.750	24.580	532.694	532.733
CM	10+51.750	24.580	533.188	533.221
CN	10+61.750	24.580	533.682	533.706
CO	10+71.750	24.580	534.176	534.191
CP	10+81.750	24.580	534.670	534.676
C.L. PIER 12	10+88.750	24.580	535.016	535.016
CQ	10+98.750	24.580	535.510	535.516
CR	11+08.750	24.580	536.004	536.016
CS	11+18.750	24.580	536.498	536.516
CT	11+28.750	24.580	536.992	537.016
CU	11+38.7[illegible]	24.580	537.486	537.516
CV	[illegible]750	24.580	537.980	538.011
CW	11+58.750	24.580	538.474	538.505
CX	11+68.750	24.580	538.968	538.999
CY	11+78.750	24.580	539.462	539.493
CZ	11+88.750	24.580	539.956	539.987
DA	11+98.750	24.580	540.450	540.479
DB	12+08.750	24.580	540.944	540.970
DC	12+18.750	24.580	541.438	541.462
DD	12+28.750	24.580	541.932	541.953
DE	12+38.750	24.580	542.426	542.445
DF	12+48.750	24.580	542.920	542.936
DG	12+58.750	24.580	543.414	543.426
DH	12+68.750	24.580	543.908	543.917
DI	12+78.750	24.580	544.402	544.407
DJ	12+88.750	24.580	544.896	544.898
C.L. PIER 13	12+95.000	24.580	545.204	545.204

LONGIT. CONST. JOINT

LOCATION	STATION	OFFSET	THEORETICAL GRADE ELEVATIONS	THEORETICAL GRADE ELEV'S ADJ. FOR D.L. DEFLECTION
C.L. PIER 10	7+54.750	21.670	518.577	518.577
BK	7+64.750	21.670	519.071	519.080
BL	7+74.750	21.670	519.565	519.583
BM	7+84.750	21.670	520.059	520.086
BN	7+94.750	21.670	520.553	520.588
BO	8+04.750	21.670	521.047	521.087
BP	8+14.750	21.670	521.541	521.585
BQ	8+24.750	21.670	522.035	522.082
BR	8+34.750	21.670	522.529	522.580
BS	8+44.750	21.670	523.023	523.073
BT	8+54.750	21.670	523.517	523.563
BU	8+64.750	21.670	524.011	524.053
BV	8+74.750	21.670	524.505	524.544
BW	8+84.750	21.670	524.999	525.032
BX	8+94.750	21.670	525.493	525.517
BY	9+04.750	21.670	525.987	526.002
BZ	9+14.750	21.670	526.481	526.487
C.L. PIER 11	9+21.750	21.670	526.827	526.827
CA	9+31.750	21.670	527.321	527.330
CB	9+41.750	21.670	527.815	527.832
CC	9+51.750	21.670	528.309	528.335
CD	9+61.750	21.670	528.803	528.838
CE	9+71.750	21.670	529.297	529.337
CF	9+81.750	21.670	529.791	529.834
CG	9+91.750	21.670	530.285	530.332
CH	10+01.750	21.670	530.779	530.829
CI	10+11.750	21.670	531.273	531.322
CJ	10+21.750	21.670	531.767	531.813
CK	10+31.750	21.670	532.261	532.303
CL	10+41.750	21.670	532.755	532.794
CM	10+51.750	21.670	533.249	533.282
CN	10+61.750	21.670	533.743	533.767
CO	10+71.750	21.670	534.237	534.252
CP	10+81.750	21.670	534.731	534.737
C.L. PIER 12	10+88.750	21.670	535.077	535.077
CQ	10+98.750	21.670	535.571	535.577
CR	11+08.750	21.670	536.065	536.077
CS	11+18.750	21.670	536.559	536.577
CT	11+28.750	21.670	537.053	537.077
CU	11+38.750	21.670	537.547	537.577
CV	11+48.750	21.670	538.041	538.072
CW	11+58.750	21.670	538.535	538.566
CX	11+68.750	21.670	539.029	539.060
CY	11+78.750	21.670	539.523	539.554
CZ	11+88.750	21.670	540.017	540.048
DA	11+98.750	21.670	540.511	540.540
DB	12+08.750	21.670	541.005	541.031
DC	12+18.750	21.670	541.499	541.523
DD	12+28.750	21.670	541.993	542.014
DE	12+38.750	21.670	542.487	542.506
DF	12+48.750	21.670	542.981	542.997
DG	12+58.750	21.670	543.475	543.487
DH	12+68.750	21.670	543.969	543.978
DI	12+78.750	21.670	544.463	544.468
DJ	12+88.750	21.670	544.957	544.959
C.L. PIER 13	12+95.000	21.670	545.265	545.265

STRINGERS 1 AND 7

LOCATION	STATION	OFFSET	THEORETICAL GRADE ELEVATIONS	THEORETICAL GRADE ELEV'S ADJ. FOR D.L. DEFLECTION
C.L. PIER 10	7+54.750	20.000	518.611	518.611
BK	7+64.750	20.000	519.105	519.114
BL	7+74.750	20.000	519.599	519.617
BM	7+84.750	20.000	520.093	520.120
BN	7+94.750	20.000	520.587	520.622
BO	8+04.750	20.000	521.081	521.121
BP	8+14.750	20.000	521.575	521.619
BQ	8+24.750	20.000	522.069	522.116
BR	8+34.750	20.000	522.563	522.614
BS	8+44.750	20.000	523.057	523.107
BT	8+54.750	20.000	523.551	523.597
BU	8+64.750	20.000	524.045	524.087
BV	8+74.750	20.000	524.539	524.578
BW	8+84.750	20.000	525.033	525.066
BX	8+94.750	20.000	525.527	525.551
BY	9+04.750	20.000	526.021	526.036
BZ	9+14.750	20.000	526.515	526.521
C.L. PIER 11	9+21.750	20.000	526.861	526.861
CA	9+31.750	20.000	527.355	527.364
CB	9+41.750	20.000	527.849	527.866
CC	9+51.750	20.000	528.343	528.369
CD	9+61.750	20.000	528.837	528.872
CE	9+71.750	20.000	529.331	529.371
CF	9+81.750	20.000	529.825	529.868
CG	9+91.750	20.000	530.319	530.366
CH	10+01.750	20.000	530.813	530.863
CI	10+11.750	20.000	531.307	531.356
CJ	10+21.750	20.000	531.801	531.847
CK	10+31.750	20.000	532.295	532.337
CL	10+41.750	20.000	532.789	532.828
CM	10+51.750	20.000	533.283	533.316
CN	10+61.750	20.000	533.777	533.801
CO	10+71.750	20.000	534.271	534.286
CP	10+81.750	20.000	534.765	534.771
C.L. PIER 12	10+88.750	20.000	535.111	535.111
CQ	10+98.750	20.000	535.605	535.611
CR	11+08.750	20.000	536.099	536.111
CS	11+18.750	20.000	536.593	536.611
CT	11+28.750	20.000	537.087	537.111
CU	11+38.750	20.000	537.581	537.611
CV	11+48.750	20.000	538.075	538.106
CW	11+58.750	20.000	538.569	538.600
CX	11+68.750	20.000	539.063	539.094
CY	11+78.750	20.000	539.557	539.588
CZ	11+88.750	20.000	540.051	540.082
DA	11+98.750	20.000	540.545	540.574
DB	12+08.750	20.000	541.039	541.065
DC	12+18.750	20.000	541.533	541.557
DD	12+28.750	20.000	542.027	542.048
DE	12+38.750	20.000	542.521	542.540
DF	12+48.750	20.000	543.015	543.031
DG	12+58.750	20.000	543.509	543.521
DH	12+68.750	20.000	544.003	544.012
DI	12+78.750	20.000	544.497	544.502
DJ	12+88.750	20.000	544.991	544.993
C.L. PIER 13	12+95.000	20.000	545.299	545.299

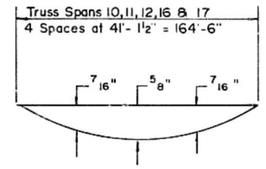

DEAD LOAD DEFLECTION DIAGRAM

(Includes weight of Concrete only)

For Span 13 deflection see Sheet 13.

Individual stringer and concrete edge beam deflection between panel points equals 1/16" max., negligible.

DEFLECTIONS SHOWN FOR TRUSS SPANS 10 THROUGH 19 ARE THEORETICAL. PRIOR TO REMOVING THE CONCRETE DECK AND PARAPET FOR STAGE I CONSTRUCTION, THE CONTRACTOR SHALL CONFIRM THE DEFLECTIONS DUE TO WEIGHT OF THE CONCRETE DECK, CURB AND PARAPET BY TAKING ELEVATIONS ON THE TOP PLATE OF THE UPPER CHORD OF REPRESENTATIVE NORTH TRUSSES AT QUARTER POINTS BY REMOVING A 1' X 1' AREA OF THE EXISTING DECK OVER THE CHORDS. AFTER STAGE I CONCRETE HAS BEEN REMOVED ADDITIONAL ELEVATIONS SHALL BE RETAKEN AT THESE LOCATIONS. IF A DIFFERENCE IN EXCESS OF 3/16" OCCURS BETWEEN THE OBSERVED DEFLECTIONS AND THE DEAD LOAD DEFLECTIONS SHOWN IN THE DIAGRAM, THE TABULATED "THEORETICAL GRADE ELEVATIONS ADJUSTED FOR DEAD LOAD DEFLECTIONS" SHALL BE MODIFIED FOR BOTH SIDES OF THE DECK TO INCORPORATE THE OBSERVED DEFLECTION VALUES.

The deflections given in the diagram are not to be used if the Engineer is working from the Grade Elevations Adjusted for Dead Load Deflection as tabulated or modified in accordance with the preceding paragraph.

For fillet details see sheet 7

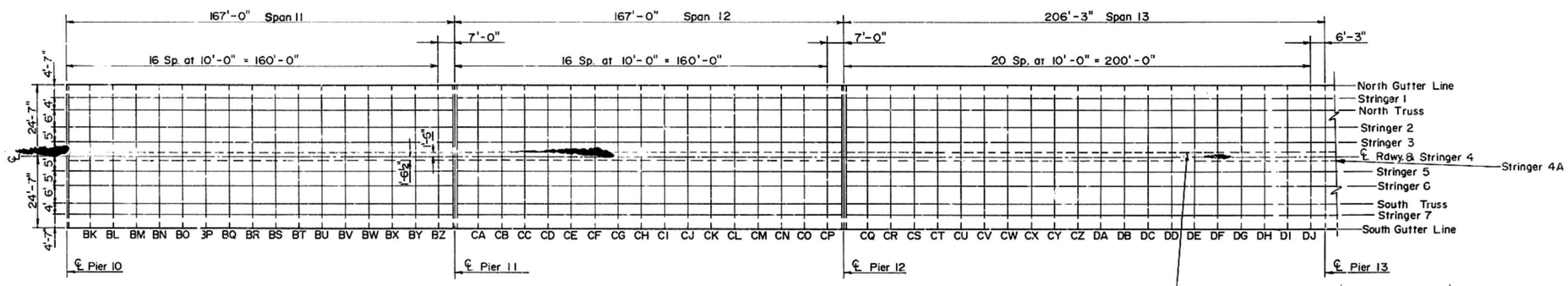

PLAN

TOP OF DECK ELEVATIONS
SPANS 11-13
CEDAR STREET BRIDGE
F.A. RTE. 669 SEC. 103B-I-4(D)
PEORIA-TAZEWELL COUNTIES

MTA, INCORPORATED

DESIGNED J.N. CHECKED G.B.M.
DRAWN K.T.B. DATE 12-11-87 NO. 85-12

ROUTE NO.	SECTION	COUNTY	TOTAL SHEETS	SHEET NO.
F.A. 669	⊗	PEORIA TAZEWELL	82	13
FED. ROAD DIST. NO. 7		ILLINOIS	PROJECT	

⊗103B-1-4(D) SHEET 11 OF 70

ELEVATIONS - SPANS 11-13

NORTH AND SOUTH TRUSSES

LOCATION	STATION	OFFSET	THEORETICAL GRADE ELEVATIONS	THEORETICAL GRADE ELEV'S ADJ. FOR D.L. DEFLECTION
C.L. PIER 10	7+54.750	16.000	518.695	518.695
BK	7+64.750	16.000	519.189	519.198
BL	7+74.750	16.000	519.683	519.701
BM	7+84.750	16.000	520.177	520.204
BN	7+94.750	16.000	520.671	520.706
BO	8+04.750	16.000	521.165	521.205
BP	8+14.750	16.000	521.659	521.703
BQ	8+24.750	16.000	522.153	522.200
BR	8+34.750	16.000	522.647	522.698
BS	8+44.750	16.000	523.141	523.191
BT	8+54.750	16.000	523.635	523.681
BU	8+64.750	16.000	524.129	524.171
BV	8+74.750	16.000	524.623	524.662
BW	8+84.750	16.000	525.117	525.150
BX	8+94.750	16.000	525.611	525.635
BY	9+04.750	16.000	526.105	526.120
BZ	9+14.750	16.000	526.599	526.605
C.L. PIER 11	9+21.750	16.000	526.945	526.945
CA	9+31.750	16.000	527.439	527.448
CB	9+41.750	16.000	527.933	527.950
CC	9+51.750	16.000	528.427	528.453
CD	9+61.750	16.000	528.921	528.956
CE	9+71.750	16.000	529.415	529.455
CF	9+81.750	16.000	529.909	529.952
CG	9+91.750	16.000	530.403	530.450
CH	10+01.750	16.000	530.897	530.947
CI	10+11.750	16.000	531.391	531.440
CJ	10+21.750	16.000	531.885	531.931
CK	10+31.750	16.000	532.379	532.421
CL	10+41.750	16.000	532.873	532.912
CM	10+51.750	16.000	533.367	533.400
CN	10+61.750	16.000	533.861	533.885
CO	10+71.750	16.000	534.355	534.370
CP	10+81.750	16.000	534.849	534.855
C.L. PIER 12	10+88.750	16.000	535.195	535.195
CQ	10+98.750	16.000	535.689	535.695
CR	11+08.750	16.000	536.183	536.195
CS	11+18.750	16.000	536.677	536.695
CT	11+28.750	16.000	537.171	537.195
CU	11+38.750	16.000	537.665	537.695
CV	11+48.750	16.000	538.159	538.190
CW	11+58.750	16.000	538.653	538.684
CX	11+68.750	16.000	539.147	539.178
CY	11+78.750	16.000	539.641	539.672
CZ	11+88.750	16.000	540.135	540.166
DA	11+98.750	16.000	540.629	540.658
DB	12+08.750	16.000	541.123	541.149
DC	12+18.750	16.000	541.617	541.641
DD	12+28.750	16.000	542.111	542.132
DE	12+38.750	16.000	542.605	542.624
DF	12+48.750	16.000	543.099	543.115
DG	12+58.750	16.000	543.593	543.605
DH	12+68.750	16.000	544.087	544.096
DI	12+78.750	16.000	544.581	544.586
DJ	12+88.750	16.000	545.075	545.077
C.L. PIER 13	12+95.000	16.000	545.383	545.383

STRINGERS 2 AND 6

LOCATION	STATION	OFFSET	THEORETICAL GRADE ELEVATIONS	THEORETICAL GRADE ELEV'S ADJ. FOR D.L. DEFLECTION
C.L. PIER 10	7+54.750	10.000	518.820	518.820
BK	7+64.750	10.000	519.314	519.323
BL	7+74.750	10.000	519.808	519.826
BM	7+84.750	10.000	520.302	520.329
BN	7+94.750	10.000	520.796	520.831
BO	8+04.750	10.000	521.290	521.330
BP	8+14.750	10.000	521.784	521.828
BQ	8+24.750	10.000	522.278	522.325
BR	8+34.750	10.000	522.772	522.823
BS	8+44.750	10.000	523.266	523.316
BT	8+54.750	10.000	523.760	523.806
BU	8+64.750	10.000	524.254	524.296
BV	8+74.750	10.000	524.748	524.787
BW	8+84.750	10.000	525.242	525.275
BX	8+94.750	10.000	525.736	525.760
BY	9+04.750	10.000	526.230	526.245
BZ	9+14.750	10.000	526.724	526.730
C.L. PIER 11	9+21.750	10.000	527.070	527.070
CA	9+31.750	10.000	527.564	527.573
CB	9+41.750	10.000	528.058	528.075
CC	9+51.750	10.000	528.552	528.578
CD	9+61.750	10.000	529.046	529.081
CE	9+71.750	10.000	529.540	529.580
CF	9+81.750	10.000	530.034	530.077
CG	9+91.750	10.000	530.528	530.575
CH	10+01.750	10.000	531.022	531.072
CI	10+11.750	10.000	531.516	531.565
CJ	10+21.750	10.000	532.010	532.056
CK	10+31.750	10.000	532.504	532.546
CL	10+41.750	10.000	532.998	533.037
CM	10+51.750	10.000	533.492	533.525
CN	10+61.750	10.000	533.986	534.010
CO	10+71.750	10.000	534.480	534.495
CP	10+81.750	10.000	534.974	534.980
C.L. PIER 12	10+88.750	10.000	535.320	535.320
CQ	10+98.750	10.000	535.814	535.820
CR	11+08.750	10.000	536.308	536.320
CS	11+18.750	10.000	536.802	536.820
CT	11+28.750	10.000	537.296	537.320
CU	11+38.750	10.000	537.790	537.820
CV	11+48.750	10.000	538.284	538.315
CW	11+58.750	10.000	538.778	538.809
CX	11+68.750	10.000	539.272	539.303
CY	11+78.750	10.000	539.766	539.797
CZ	11+88.750	10.000	540.260	540.291
DA	11+98.750	10.000	540.754	540.783
DB	12+08.750	10.000	541.248	541.274
DC	12+18.750	10.000	541.742	541.766
DD	12+28.750	10.000	542.236	542.257
DE	12+38.750	10.000	542.730	542.749
DF	12+48.750	10.000	543.224	543.240
DG	12+58.750	10.000	543.718	543.730
DH	12+68.750	10.000	544.212	544.221
DI	12+78.750	10.000	544.706	544.711
DJ	12+88.750	10.000	545.200	545.202
C.L. PIER 13	12+95.000	10.000	545.508	545.508

STRINGERS 3 AND 5

LOCATION	STATION	OFFSET	THEORETICAL GRADE ELEVATIONS	THEORETICAL GRADE ELEV'S ADJ. FOR D.L. DEFLECTION
C.L. PIER 10	7+54.750	5.000	518.924	518.924
BK	7+64.750	5.000	519.418	519.427
BL	7+74.750	5.000	519.912	519.930
BM	7+84.750	5.000	520.406	520.433
BN	7+94.750	5.000	520.900	520.935
BO	8+04.750	5.000	521.394	521.434
BP	8+14.750	5.000	521.888	521.932
BQ	8+24.750	5.000	522.382	522.429
BR	8+34.750	5.000	522.876	522.927
BS	8+44.750	5.000	523.370	523.420
BT	8+54.750	5.000	523.864	523.910
BU	8+64.750	5.000	524.358	524.400
BV	8+74.750	5.000	524.852	524.891
BW	8+84.750	5.000	525.346	525.379
BX	8+94.750	5.000	525.840	525.864
BY	9+04.750	5.000	526.334	526.349
BZ	9+14.750	5.000	526.828	526.834
C.L. PIER 11	9+21.750	5.000	527.174	527.174
CA	9+31.750	5.000	527.668	527.677
CB	9+41.750	5.000	528.162	528.179
CC	9+51.750	5.000	528.656	528.682
CD	9+61.750	5.000	529.150	529.185
CE	9+71.750	5.000	529.644	529.684
CF	9+81.750	5.000	530.138	530.181
CG	9+91.750	5.000	530.632	530.679
CH	10+01.750	5.000	531.126	531.176
CI	10+11.750	5.000	531.620	531.669
CJ	10+21.750	5.000	532.114	532.160
CK	10+31.750	5.000	532.608	532.650
CL	10+41.750	5.000	533.102	533.141
CM	10+51.750	5.000	533.596	533.629
CN	10+61.750	5.000	534.090	534.114
CO	10+71.750	5.000	534.584	534.599
CP	10+81.750	5.000	535.078	535.084
C.L. PIER 12	10+88.750	5.000	535.424	535.424
CQ	10+98.750	5.000	535.918	535.924
CR	11+08.750	5.000	536.412	536.424
CS	11+18.750	5.000	536.906	[illegible]
CT	11+28.750	5.000	537.400	537.424
CU	11+38.750	5.000	537.894	537.924
CV	11+48.750	5.000	538.388	538.419
CW	11+58.750	5.000	538.882	538.913
CX	11+68.750	5.000	539.376	539.407
CY	11+78.750	5.000	539.870	539.901
CZ	11+88.750	5.000	540.364	540.395
DA	11+98.750	5.000	540.858	540.887
DB	12+08.750	5.000	541.352	541.378
DC	12+18.750	5.000	541.846	541.870
DD	12+28.750	5.000	542.340	542.361
DE	12+38.750	5.000	542.834	542.853
DF	12+48.750	5.000	543.328	543.344
DG	12+58.750	5.000	543.822	543.834
DH	12+68.750	5.000	544.316	544.325
DI	12+78.750	5.000	544.810	544.815
DJ	12+88.750	5.000	545.304	545.306
C.L. PIER 13	12+95.000	5.000	545.612	545.612

TOP OF DECK ELEVATIONS
SPANS 11-13
CEDAR STREET BRIDGE
F.A. RTE. 669 SEC. 103B-1-4(D)
PEORIA-TAZEWELL COUNTIES

MTA, INCORPORATED

DESIGNED G.C. CHECKED J.N.
DRAWN F.D.J. DATE 12-11-87 NO. 85-12

ROUTE NO	SECTION	COUNTY	TOTAL SHEETS	SHEET NO
FA 669	⊛	PEORIA TAZEWELL	82	14
FED. ROAD DIST. NO. 7		ILLINOIS	PROJECT	

⊛103B-1-4(D) SHEET 12 OF 70

ELEVATIONS – SPANS 11-13

STAGE CONSTR. JOINT

LOCATION	STATION	OFFSET	THEORETICAL GRADE ELEVATIONS	THEORETICAL GRADE ELEV'S ADJ. FOR D.L. DEFLECTION
C.L. PIER 10	7+54.750	1.500	518.997	518.997
BK	7+64.750	1.500	519.491	519.500
BL	7+74.750	1.500	519.985	520.003
BM	7+84.750	1.500	520.479	520.506
BN	7+94.750	1.500	520.973	521.008
BO	8+04.750	1.500	521.467	521.507
BP	8+14.750	1.500	521.961	522.005
BQ	8+24.750	1.500	522.455	522.502
BR	8+34.750	1.500	522.949	523.000
BS	8+44.750	1.500	523.443	523.493
BT	8+54.750	1.500	523.937	523.983
BU	8+64.750	1.500	524.431	524.473
BV	8+74.750	1.500	524.925	524.964
BW	8+84.750	1.500	525.419	525.452
BX	8+94.750	1.500	525.913	525.937
BY	9+04.750	1.500	526.407	526.422
BZ	9+14.750	1.500	526.901	526.907
C.L. PIER 11	9+21.750	1.500	527.247	527.247
CA	9+31.750	1.500	527.741	527.750
CB	9+41.750	1.500	528.235	528.252
CC	9+51.750	1.500	528.729	528.755
CD	9+61.750	1.500	529.223	529.258
CE	9+71.750	1.500	529.717	529.757
CF	9+81.750	1.500	530.211	530.254
CG	9+91.750	1.500	530.705	530.752
CH	10+01.750	1.500	531.199	531.249
CI	10+11.750	1.500	531.693	531.742
CJ	10+21.750	1.500	532.187	532.233
CK	10+31.750	1.500	532.681	532.723
CL	10+41.750	1.500	533.175	533.214
CM	10+51.750	1.500	533.669	533.702
CN	10+61.750	1.500	534.163	534.187
CO	10+71.750	1.500	534.657	534.672
CP	10+81.750	1.500	535.151	535.157
C.L. PIER 12	10+88.750	1.500	535.497	535.497
CQ	10+98.750	1.500	535.991	535.997
CR	11+08.750	1.500	536.485	536.497
CS	11+18.750	1.500	536.979	536.997
CT	11+28.750	1.500	537.473	537.497
CU	11+38.750	1.500	537.967	537.997
CV	11+48.750	1.500	538.461	538.492
CW	11+58.750	1.500	538.955	538.986
CX	11+68.750	1.500	539.449	539.480
CY	11+78.750	1.500	539.943	539.974
CZ	11+88.750	1.500	540.437	540.468
DA	11+98.750	1.500	540.931	540.960
DB	12+08.750	1.500	541.425	541.451
DC	12+18.750	1.500	541.919	541.943
DD	12+28.750	1.500	542.413	542.434
DE	12+38.750	1.500	542.907	542.926
DF	12+48.750	1.500	543.401	543.417
DG	12+58.750	1.500	543.895	543.907
DH	12+68.750	1.500	544.389	544.398
DI	12+78.750	1.500	544.883	544.888
DJ	12+88.750	1.500	545.377	545.379
C.L. PIER 13	12+95.000	1.500	545.685	545.685

℄ RDWY. & STRINGER 4

LOCATION	STATION	OFFSET	THEORETICAL GRADE ELEVATIONS	THEORETICAL GRADE ELEV'S ADJ. FOR D.L. DEFLECTION
C.L. PIER 10	7+54.750	0.000	519.028	519.028
BK	7+64.750	0.000	519.522	519.531
BL	7+74.750	0.000	520.016	520.034
BM	7+84.750	0.000	520.510	520.537
BN	7+94.750	0.000	521.004	521.039
BO	8+04.750	0.000	521.498	521.538
BP	8+14.750	0.000	521.992	522.036
BQ	8+24.750	0.000	522.486	522.533
BR	8+34.750	0.000	522.980	523.031
BS	8+44.750	0.000	523.474	523.524
BT	8+54.750	0.000	523.968	524.014
BU	8+64.750	0.000	524.462	524.504
BV	8+74.750	0.000	524.956	524.995
BW	8+84.750	0.000	525.450	525.483
BX	8+94.750	0.000	525.944	525.968
BY	9+04.750	0.000	526.438	526.453
BZ	9+14.750	0.000	526.932	526.938
C.L. PIER 11	9+21.750	0.000	527.278	527.278
CA	9+31.750	0.000	527.772	527.781
CB	9+41.750	0.000	528.266	528.283
CC	9+51.750	0.000	528.760	526.786
CD	9+61.750	0.000	529.254	529.289
CE	9+71.750	0.000	529.748	529.788
CF	9+81.750	0.000	530.242	530.285
CG	9+91.750	0.000	530.736	530.783
CH	10+01.750	0.000	531.230	531.280
CI	10+11.750	0.000	531.724	531.773
CJ	10+21.750	0.000	532.218	532.264
CK	10+31.750	0.000	532.712	532.754
CL	10+41.750	0.000	533.206	533.245
CM	10+51.750	0.000	533.700	533.733
CN	10+61.750	0.000	534.194	534.218
CO	10+71.750	0.000	534.688	534.703
CP	10+81.750	0.000	535.182	535.188
C.L. PIER 12	10+88.750	0.000	535.528	535.528
CQ	10+98.750	0.000	536.022	536.028
CR	11+08.750	0.000	536.516	536.528
CS	11+18.750	0.000	537.010	537.028
CT	11+28.750	0.000	537.504	537.528
CU	11+38.750	0.000	537.998	538.028
CV	11+48.750	0.000	538.492	538.523
CW	11+58.750	0.000	538.986	539.017
CX	11+68.750	0.000	539.480	539.511
CY	11+78.750	0.000	539.974	540.005
CZ	11+88.750	0.000	540.468	540.499
DA	11+98.750	0.000	540.962	540.991
DB	12+08.750	0.000	541.456	541.482
DC	12+18.750	0.000	541.950	541.974
DD	12+28.750	0.000	542.444	542.465
DE	12+38.750	0.000	542.938	542.957
DF	12+48.750	0.000	543.432	543.448
DG	12+58.750	0.000	543.926	543.938
DH	12+68.750	0.000	544.420	544.429
DI	12+78.750	0.000	544.914	544.919
DJ	12+88.750	0.000	545.408	545.410
C.L. PIER 13	12+95.000	0.000	545.716	545.716

STRINGER 4A

LOCATION	STATION	OFFSET	THEORETICAL GRADE ELEVATIONS	THEORETICAL GRADE ELEV'S ADJ. FOR D.L. DEFLECTION
C.L. PIER 10	7+54.750	-1.540	518.997	518.997
BK	7+64.750	-1.540	519.491	519.500
BL	7+74.750	-1.540	519.985	520.003
BM	7+84.750	-1.540	520.479	520.506
BN	7+94.750	-1.540	520.973	521.008
BO	8+04.750	-1.540	521.467	521.507
BP	8+14.750	-1.540	521.961	522.005
BQ	8+24.750	-1.540	522.455	522.502
BR	8+34.750	-1.540	522.949	523.000
BS	8+44.750	-1.540	523.443	523.493
BT	8+54.750	-1.540	523.937	523.983
BU	8+64.750	-1.540	524.431	524.473
BV	8+74.750	-1.540	524.925	524.964
BW	8+84.750	-1.540	525.419	525.452
BX	8+94.750	-1.540	525.913	525.937
BY	9+04.750	-1.540	526.407	526.422
BZ	9+14.750	-1.540	526.901	526.907
C.L. PIER 11	9+21.750	-1.540	527.247	527.247
CA	9+31.750	-1.540	527.741	527.750
CB	9+41.750	-1.540	528.235	528.252
CC	9+51.750	-1.540	528.729	528.755
CD	9+61.750	-1.540	529.223	529.258
CE	9+71.750	-1.540	529.717	529.757
CF	9+81.750	-1.540	530.211	530.254
CG	9+91.750	-1.540	530.705	530.752
CH	10+01.750	-1.540	531.199	531.249
CI	10+11.750	-1.540	531.693	531.742
CJ	10+21.750	-1.540	532.187	532.233
CK	10+31.750	-1.540	532.681	532.723
CL	10+41.750	-1.540	533.175	533.214
CM	10+51.750	-1.540	533.669	533.702
CN	10+61.750	-1.540	534.163	534.187
CO	10+71.750	-1.540	534.657	534.672
CP	10+81.750	-1.540	535.151	535.157
C.L. PIER 12	10+88.750	-1.540	535.497	535.497
CQ	10+98.750	-1.540	535.991	535.997
CR	11+08.750	-1.540	536.485	536.497
[redacted]	11+18.750	-1.540	[redacted]	[redacted]
CT	11+28.750	-1.540	537.473	537.497
CU	11+38.750	-1.540	537.967	537.997
CV	11+48.750	-1.540	538.461	538.492
CW	11+58.750	-1.540	538.955	538.986
CX	11+68.750	-1.540	539.449	539.480
CY	11+78.750	-1.540	539.943	539.974
CZ	11+88.750	-1.540	540.437	540.468
DA	11+98.750	-1.540	540.931	540.960
DB	12+08.750	-1.540	541.425	541.451
DC	12+18.750	-1.540	541.919	541.943
DD	12+28.750	-1.540	542.413	542.434
DE	12+38.750	-1.540	542.907	542.926
DF	12+48.750	-1.540	543.401	543.417
DG	12+58.750	-1.540	543.895	543.907
DH	12+68.750	-1.540	544.389	544.398
DI	12+78.750	-1.540	544.883	544.888
DJ	12+88.750	-1.540	545.377	545.379
C.L. PIER 13	12+95.000	-1.540	545.68[illegible]	545.685

TOP OF DECK ELEVATIONS
SPANS 11-13
CEDAR STREET BRIDGE
F.A. RTE. 669 SEC. 103B-1-4(D)
PEORIA-TAZEWELL COUNTIES

MTA, INCORPORATED

DESIGNED G.C. CHECKED J.N.
DRAWN F.D.J. DATE 12-11-87 NO. 85-12

ROUTE NO	SECTION	COUNTY	TOTAL SHEETS	SHEET NO
FA 669	⊗	PEORIA TAZEWELL	82	15
FED ROAD DIST NO 7	ILLINOIS	PROJECT		

⊗103B - 1 - 4 (D) SHEET 13 OF 70

ELEVATIONS — SPANS 14 – 15

NORTH AND SOUTH GUTTER LINE

LOCATION	STATION	OFFSET	THEORETICAL GRADE ELEVATIONS	THEORETICAL GRADE ELEV'S ADJ. FOR D.L. DEFLECTION
C.L. PIER 13	12+95.000	24.580	545.204	545.204
DK	13+05.000	24.580	545.701	545.703
DL	13+15.000	24.580	546.195	546.200
DM	13+25.000	24.580	546.689	546.696
DN	13+35.000	24.580	547.183	547.193
DO	13+45.000	24.580	547.662	547.674
DP	13+55.000	24.580	548.095	548.110
DQ	13+65.000	24.580	548.482	548.499
DR	13+75.000	24.580	548.821	548.840
DS	13+85.000	24.580	549.114	549.134
DT	13+95.000	24.580	549.361	549.381
DU	14+05.000	24.580	549.560	549.582
DV	14+15.000	24.580	549.713	549.736
DW	14+25.000	24.580	549.819	549.843
DX	14+35.000	24.580	549.878	549.903
MIDSPAN 14	14+43.000	24.580	549.892	549.918
DY	14+53.000	24.580	549.867	549.892
DZ	14+63.000	24.580	549.795	549.819
EA	14+73.000	24.580	549.677	549.700
EB	14+83.000	24.580	549.512	549.533
EC	14+93.000	24.580	549.300	549.321
ED	15+03.000	24.580	549.041	549.061
EE	15+13.000	24.580	548.735	548.754
EF	15+23.000	24.580	548.384	548.400
EG	15+33.000	24.580	547.985	547.999
EH	15+43.000	24.580	547.540	547.551
EI	15+53.000	24.580	547.051	547.060
EJ	15+63.000	24.580	546.554	546.561
EK	15+73.000	24.580	546.057	546.061
EL	15+83.000	24.580	545.560	545.562
C.L. PIER 14	15+91.000	24.580	545.162	545.162
EM	16+01.000	24.580	544.665	544.669
EN	16+11.000	24.580	544.166	544.175
EO	16+21.000	24.580	543.671	543.682
EP	16+31.000	24.580	543.174	543.188
EQ	16+41.000	24.580	542.677	542.695
ER	16+51.000	24.580	542.180	542.201
ES	16+61.000	24.580	541.683	541.706
ET	16+71.000	24.580	541.186	541.212
EU	16+81.000	24.580	540.689	540.717
EV	16+91.000	24.580	540.192	540.223
EW	17+01.000	24.580	539.695	539.726
EX	17+11.000	24.580	539.198	539.229
EY	17+21.000	24.580	538.701	538.732
EZ	17+31.000	24.580	538.204	538.235
FA	17+41.000	24.580	537.707	537.738
FB	17+51.000	24.580	537.210	537.238
FC	17+61.000	24.580	536.713	536.735
FD	17+71.000	24.580	536.216	536.232
FE	17+81.000	24.580	535.719	535.729
FF	17+91.000	24.580	535.222	535.226
C.L. PIER 15	17+97.250	24.580	534.912	534.912

LONGIT. CONST. JOINT

LOCATION	STATION	OFFSET	THEORETICAL GRADE ELEVATIONS	THEORETICAL GRADE ELEV'S ADJ. FOR D.L. DEFLECTION
C.L. PIER 13	12+95.000	21.670	545.265	545.265
DK	13+05.000	21.670	545.762	545.764
DL	13+15.000	21.670	546.256	546.261
DM	13+25.000	21.670	546.750	546.757
DN	13+35.000	21.670	547.244	547.254
DO	13+45.000	21.670	547.723	547.735
DP	13+55.000	21.670	548.156	548.171
DQ	13+65.000	21.670	548.543	548.560
DR	13+75.000	21.670	548.882	548.901
DS	13+85.000	21.670	549.175	549.195
DT	13+95.000	21.670	549.422	549.442
DU	14+05.000	21.670	549.621	549.643
DV	14+15.000	21.670	549.774	549.797
DW	14+25.000	21.670	549.880	549.904
DX	14+35.000	21.670	549.939	549.964
MIDSPAN 14	14+43.000	21.670	549.953	549.979
DY	14+53.000	21.670	549.928	549.953
DZ	14+63.000	21.670	549.856	549.880
EA	14+73.000	21.670	549.738	549.761
EB	14+83.000	21.670	549.573	549.594
EC	14+93.000	21.670	549.361	549.382
ED	15+03.000	21.670	549.102	549.122
EE	15+13.000	21.670	548.797	548.815
EF	15+23.000	21.670	548.445	548.461
EG	15+33.000	21.670	548.046	548.060
EH	15+43.000	21.670	547.601	547.612
EI	15+53.000	21.670	547.112	547.121
EJ	15+63.000	21.670	546.615	546.622
EK	15+73.000	21.670	546.118	546.122
EL	15+83.000	21.670	545.621	545.623
C.L. PIER 14	15+91.000	21.670	545.223	545.223
EM	16+01.000	21.670	544.726	544.730
EN	16+11.000	21.670	544.229	544.236
EO	16+21.000	21.670	543.732	543.743
EP	16+31.000	21.670	543.235	543.249
EQ	16+41.000	21.670	542.738	542.756
ER	16+51.000	21.670	542.241	542.262
ES	16+61.000	21.670	541.744	541.767
ET	16+71.000	21.670	541.247	541.273
EU	16+81.000	21.670	540.750	540.778
EV	16+91.000	21.670	540.253	540.284
EW	17+01.000	21.670	539.756	539.787
EX	17+11.000	21.670	539.259	539.290
EY	17+21.000	21.670	538.762	538.793
EZ	17+31.000	21.670	538.265	538.296
FA	17+41.000	21.670	537.768	537.799
FB	17+51.000	21.670	537.271	537.299
FC	17+61.000	21.670	536.774	536.796
FD	17+71.000	21.670	536.277	536.293
FE	17+81.000	21.670	535.780	535.796
FF	17+91.000	21.670	535.283	535.287
C.L. PIER 15	17+97.250	21.670	534.973	534.973

STRINGERS 1 AND 7

LOCATION	STATION	OFFSET	THEORETICAL GRADE ELEVATIONS	THEORETICAL GRADE ELEV'S ADJ. FOR D.L. DEFLECTION
C.L. PIER 13	12+95.000	20.000	545.299	545.299
DK	13+05.000	20.000	545.796	545.798
DL	13+15.000	20.000	546.290	546.295
DM	13+25.000	20.000	546.784	546.791
DN	13+35.000	20.000	547.278	547.288
DO	13+45.000	20.000	547.757	547.769
DP	13+55.000	20.000	548.190	548.205
DQ	13+65.000	20.000	548.577	548.594
DR	13+75.000	20.000	548.916	548.935
DS	13+85.000	20.000	549.209	549.229
DT	13+95.000	20.000	549.456	549.476
DU	14+05.000	20.000	549.655	549.677
DV	14+15.000	20.000	549.808	549.831
DW	14+25.000	20.000	549.914	549.938
DX	14+35.000	20.000	549.973	549.998
MIDSPAN 14	14+43.000	20.000	549.987	550.013
DY	14+53.000	20.000	549.962	549.987
DZ	14+63.000	20.000	549.890	549.914
EA	14+73.000	20.000	549.772	549.795
EB	14+83.000	20.000	549.607	549.628
EC	14+93.000	20.000	549.395	549.416
ED	15+03.000	20.000	549.136	549.156
EE	15+13.000	20.000	548.831	548.849
EF	15+23.000	20.000	548.479	548.495
EG	15+33.000	20.000	548.080	548.094
EH	15+43.000	20.000	547.635	547.646
EI	15+53.000	20.000	547.146	547.155
EJ	15+63.000	20.000	546.649	546.656
EK	15+73.000	20.000	546.152	546.156
EL	15+83.000	20.000	545.655	545.657
C.L. PIER 14	15+91.000	20.000	545.257	545.257
EM	16+01.000	20.000	544.760	544.764
EN	16+11.000	20.000	544.263	544.270
EO	16+21.000	20.000	543.766	543.777
EP	16+31.000	20.000	543.269	543.283
EQ	16+41.000	20.000	542.772	542.790
ER	16+51.000	20.000	542.275	542.296
ES	16+61.000	20.000	541.778	541.801
ET	16+71.000	20.000	541.281	541.307
EU	16+81.000	20.000	540.784	540.812
EV	16+91.000	20.000	540.287	540.318
EW	17+01.000	20.000	539.790	539.821
EX	17+11.000	20.000	539.293	539.324
EY	17+21.000	20.000	538.796	538.827
EZ	17+31.000	20.000	538.299	538.330
FA	17+41.000	20.000	537.802	537.833
FB	17+51.000	20.000	537.305	537.333
FC	17+61.000	20.000	536.808	536.830
FD	17+71.000	20.000	536.311	536.327
FE	17+81.000	20.000	535.814	535.824
FF	17+91.000	20.000	535.317	535.321
C.L. PIER 15	17+97.250	20.000	535.007	535.007

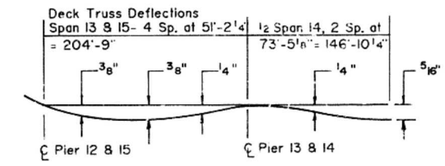

DEAD LOAD DEFLECTION DIAGRAM

(Includes weight of Concrete only)

Individual stringer and concrete edge beam deflection between panel points equals 1/16" max., negligible.

DEFLECTIONS SHOWN FOR TRUSS SPANS 10 THROUGH 19 ARE THEORETICAL. PRIOR TO REMOVING THE CONCRETE DECK AND PARAPET FOR STAGE I CONSTRUCTION, THE CONTRACTOR SHALL CONFIRM THE DEFLECTIONS DUE TO WEIGHT OF THE CONCRETE DECK, CURB AND PARAPET BY TAKING ELEVATIONS ON THE TOP PLATE OF THE UPPER CHORD OF REPRESENTATIVE NORTH TRUSSES AT QUARTER POINTS BY REMOVING A 1' X 1' AREA OF THE EXISTING DECK OVER THE CHORDS. AFTER STAGE I CONCRETE HAS BEEN REMOVED ADDITIONAL ELEVATIONS SHALL BE RETAKEN AT THESE LOCATIONS. IF A DIFFERENCE IN EXCESS OF 3/16" OCCURS BETWEEN THE OBSERVED DEFLECTIONS AND THE DEAD LOAD DEFLECTIONS SHOWN IN THE DIAGRAM, THE TABULATED "THEORETICAL GRADE ELEVATIONS ADJUSTED FOR DEAD LOAD DEFLECTIONS" SHALL BE MODIFIED FOR BOTH SIDES OF THE DECK TO INCORPORATE THE OBSERVED DEFLECTION VALUES.

The deflections given in the diagram are not to be used if the Engineer is working from the Grade Elevations Adjusted for Dead Load Deflection as tabulated or modified in accordance with the preceding paragraph.

For fillet details see sheet 7.

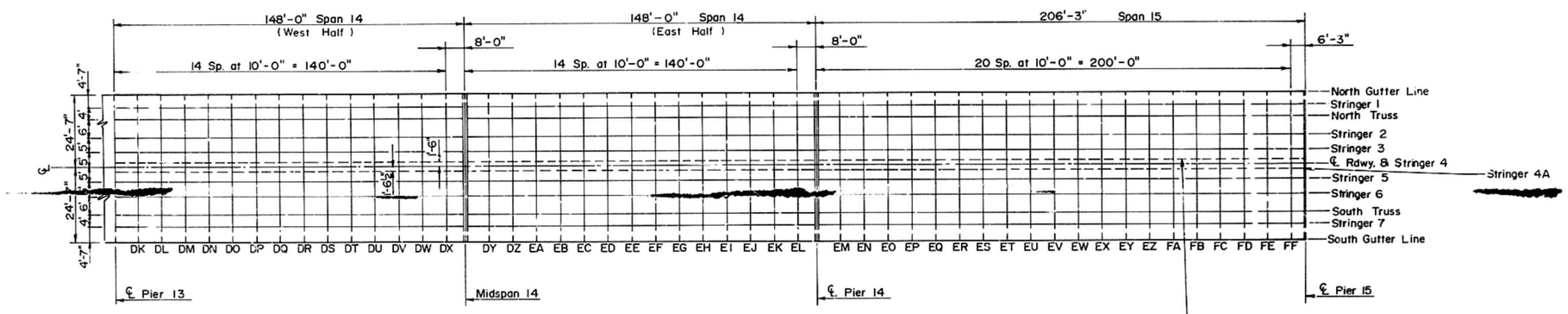

PLAN

TOP OF DECK ELEVATIONS
SPANS 14-15
CEDAR STREET BRIDGE
F.A. RTE. 669 SEC. 103B-I-4(D)
PEORIA-TAZEWELL COUNTIES

MTA, INCORPORATED

DESIGNED J.N. CHECKED G.B.M.
DRAWN K.T.B. DATE 12-11-87 H085-12

ROUTE NO.	SECTION	COUNTY	TOTAL SHEETS	SHEET NO.
F.A. 669	⊛	PEORIA TAZEWELL	82	16
FED. ROAD DIST. NO. 7		ILLINOIS	PROJECT [redacted]	

⊛103B-1-4(D) SHEET 14 OF 70

ELEVATIONS - SPANS 14-15

NORTH AND SOUTH TRUSSES

LOCATION	STATION	OFFSET	THEORETICAL GRADE ELEVATIONS	THEORETICAL GRADE ELEV'S ADJ. FOR D.L. DEFLECTION
C.L. PIER 13	12+95.000	16.000	545.383	545.383
DK	13+05.000	16.000	545.880	545.882
DL	13+15.000	16.000	546.374	546.379
DM	13+25.000	16.000	546.868	546.875
DN	13+35.000	16.000	547.362	547.372
DO	13+45.000	16.000	547.841	547.853
DP	13+55.000	16.000	548.274	548.289
DQ	13+65.000	16.000	548.661	548.678
DR	13+75.000	16.000	549.000	549.019
DS	13+85.000	16.000	549.293	549.313
DT	13+95.000	16.000	549.540	549.560
DU	14+05.000	16.000	549.739	549.761
DV	14+15.000	16.000	549.892	549.915
DW	14+25.000	16.000	549.998	550.022
DX	14+35.000	16.000	550.057	550.082
MIDSPAN 14	14+45.000	16.000	550.071	550.097
DY	14+53.000	16.000	550.046	550.071
DZ	14+63.000	16.000	549.974	549.998
EA	14+73.000	16.000	549.856	549.879
EB	14+83.000	16.000	549.691	549.712
EC	14+93.000	16.000	549.479	549.500
ED	15+03.000	16.000	549.220	549.240
EE	15+13.000	16.000	548.915	548.933
EF	15+23.000	16.000	548.563	548.579
EG	15+33.000	16.000	548.164	548.178
EH	15+43.000	16.000	547.719	547.730
EI	15+53.000	16.000	547.230	547.239
EJ	15+63.000	16.000	546.733	546.740
EK	15+73.000	16.000	546.236	546.240
EL	15+83.000	16.000	545.739	545.741
C.L. PIER 14	15+91.000	16.000	545.341	545.341
EM	16+01.000	16.000	544.844	544.848
EN	16+11.000	16.000	544.347	544.354
EO	16+21.000	16.000	543.850	543.861
EP	16+31.000	16.000	543.353	543.367
EQ	16+41.000	[illegible]	542.856	542.874
ER	16+51.000	[illegible]	542.359	[illegible]
ES	16+61.000	16.000	541.862	541.885
ET	16+71.000	16.000	541.365	541.391
EU	16+81.000	16.000	540.868	540.896
EV	16+91.000	16.000	540.371	540.402
EW	17+01.000	16.000	539.874	539.905
EX	17+11.000	16.000	539.377	539.408
EY	17+21.000	16.000	538.880	538.911
EZ	17+31.000	16.000	538.383	538.414
FA	17+41.000	16.000	537.886	537.917
FB	17+51.000	16.000	537.389	537.417
FC	17+61.000	16.000	536.892	536.914
FD	17+71.000	16.000	536.395	536.411
FE	17+81.000	16.000	535.898	535.908
FF	17+91.000	16.000	535.401	535.405
C.L. PIER 15	17+97.250	16.000	535.091	535.091

STRINGERS 2 AND 6

LOCATION	STATION	OFFSET	THEORETICAL GRADE ELEVATIONS	THEORETICAL GRADE ELEV'S ADJ. FOR D.L. DEFLECTION
C.L. PIER 13	12+95.000	10.000	545.508	545.508
DK	13+05.000	10.000	546.005	546.007
DL	13+15.000	10.000	546.499	546.504
DM	13+25.000	10.000	546.993	547.000
DN	13+35.000	10.000	547.487	547.497
DO	13+45.000	10.000	547.966	547.978
DP	13+55.000	10.000	548.399	548.414
DQ	13+65.000	10.000	548.786	548.803
DR	13+75.000	10.000	549.125	549.144
DS	13+85.000	10.000	549.418	549.438
DT	13+95.000	10.000	549.665	549.685
DU	14+05.000	10.000	549.864	549.886
DV	14+15.000	10.000	550.017	550.040
DW	14+25.000	10.000	550.123	550.147
DX	14+35.000	10.000	550.182	550.207
MIDSPAN 14	14+45.000	10.000	550.196	550.222
DY	14+53.000	10.000	550.171	550.196
DZ	14+63.000	10.000	550.099	550.123
EA	14+73.000	10.000	549.981	550.004
EB	14+83.000	10.000	549.816	549.837
EC	14+93.000	10.000	549.604	549.625
ED	15+03.000	10.000	549.345	549.365
EE	15+13.000	10.000	549.040	549.058
EF	15+23.000	10.000	548.688	548.704
EG	15+33.000	10.000	548.289	548.303
EH	15+43.000	10.000	547.844	547.855
EI	15+53.000	10.000	547.355	547.364
EJ	15+63.000	10.000	546.858	546.865
EK	15+73.000	10.000	546.361	546.365
EL	15+83.000	10.000	545.864	545.866
C.L. PIER 14	15+91.000	10.000	545.466	545.466
EM	16+01.000	10.000	544.969	544.973
EN	16+11.000	10.000	544.472	544.479
EO	16+21.000	10.000	543.975	543.986
EP	16+31.000	10.000	543.478	543.492
EQ	16+41.000	10.000	542.981	542.999
ER	16+51.000	10.000	542.484	542.505
ES	16+61.000	10.000	541.987	542.010
ET	16+71.000	10.000	541.490	541.516
EU	16+81.000	10.000	540.993	541.021
EV	16+91.000	10.000	540.496	540.527
EW	17+01.000	10.000	539.999	540.030
EX	17+11.000	10.000	539.502	539.533
EY	17+21.000	10.000	539.005	539.036
EZ	17+31.000	10.000	538.508	538.539
FA	17+41.000	10.000	538.011	538.042
FB	17+51.000	10.000	537.514	537.542
FC	17+61.000	10.000	537.017	537.039
FD	17+71.000	10.000	536.520	536.536
FE	17+81.000	10.000	536.023	536.033
FF	17+91.000	10.000	535.526	535.530
C.L. PIER 15	17+97.250	10.000	535.216	535.216

STRINGERS 3 AND 5

LOCATION	STATION	OFFSET	THEORETICAL GRADE ELEVATIONS	THEORETICAL GRADE ELEV'S ADJ. FOR D.L. DEFLECTION
C.L. PIER 13	12+95.000	5.000	545.612	545.612
DK	13+05.000	5.000	546.109	546.111
DL	13+15.000	5.000	546.603	546.608
DM	13+25.000	5.000	547.097	547.104
DN	13+35.000	5.000	547.591	547.601
DO	13+45.000	5.000	548.070	548.082
DP	13+55.000	5.000	548.503	548.518
DQ	13+65.000	5.000	548.890	548.907
DR	13+75.000	5.000	549.229	549.248
DS	13+85.000	5.000	549.522	549.542
DT	13+95.000	5.000	549.769	549.789
DU	14+05.000	5.000	549.968	549.990
DV	14+15.000	5.000	550.121	550.144
DW	14+25.000	5.000	550.227	550.251
DX	14+35.000	5.000	550.286	550.311
MIDSPAN 14	14+45.000	5.000	550.300	550.326
DY	14+53.000	5.000	550.275	550.300
DZ	14+63.000	5.000	550.203	550.227
EA	14+73.000	5.000	550.085	550.108
EB	14+83.000	5.000	549.920	549.941
EC	14+93.000	5.000	549.708	549.729
ED	15+03.000	5.000	549.449	549.469
EE	15+13.000	5.000	549.144	549.162
EF	15+23.000	5.000	548.792	548.808
EG	15+33.000	5.000	548.393	548.407
EH	15+43.000	5.000	547.948	547.959
EI	15+53.000	5.000	547.459	547.468
EJ	15+63.000	5.000	546.962	546.969
EK	15+73.000	5.000	546.465	546.469
EL	15+83.000	5.000	545.968	545.970
C.L. PIER 14	15+91.000	5.000	545.570	545.570
EM	16+01.000	5.000	545.073	545.077
EN	16+11.000	5.000	544.576	544.583
EO	16+21.000	5.000	544.079	544.090
EP	16+31.000	5.000	543.582	543.596
EQ	16+41.000	5.000	543.085	543.103
[illegible]	16+51.000	5.000	[illegible]	542.609
ES	16+61.000	5.000	542.091	542.114
ET	16+71.000	5.000	541.594	541.620
EU	16+81.000	5.000	541.097	541.125
EV	16+91.000	5.000	540.600	540.631
EW	17+01.000	5.000	540.103	540.134
EX	17+11.000	5.000	539.606	539.637
EY	17+21.000	5.000	539.109	539.140
EZ	17+31.000	5.000	538.612	538.643
FA	17+41.000	5.000	538.115	538.146
FB	17+51.000	5.000	537.618	537.646
FC	17+61.000	5.000	537.121	537.143
FD	17+71.000	5.000	536.624	536.640
FE	17+81.000	5.000	536.127	536.137
FF	17+91.000	5.000	535.630	535.634
C.L. PIER 15	17+97.250	5.000	535.320	535.320

TOP OF DECK ELEVATIONS
SPANS 14-15
CEDAR STREET BRIDGE
F.A. RTE. 669 SEC. 103B-1-4(D)
PEORIA-TAZEWELL COUNTIES

MTA, INCORPORATED

DESIGNED G.C. CHECKED J.H.
DRAWN F.D.J. DATE 12-11-87 NO. 85-12

ROUTE NO.	SECTION	COUNTY	TOTAL SHEETS	SHEET NO.
F.A. 669	⊗	PEORIA TAZEWELL	82	17
FED. ROAD DIST. NO. 7		ILLINOIS	PROJECT	

⊗103B-1-4(D) SHEET 15 OF 70

ELEVATIONS – SPANS 14—15

STAGE CONST. JOINT

LOCATION	STATION	OFFSET	THEORETICAL GRADE ELEVATIONS	THEORETICAL GRADE ELEV'S ADJ. FOR D.L. DEFLECTION
C.L. PIER 13	12+95.000	1.500	545.685	545.685
DK	13+05.000	1.500	546.182	546.184
DL	13+15.000	1.500	546.676	546.681
DM	13+25.000	1.500	547.170	547.177
DN	13+35.000	1.500	547.664	547.674
DO	13+45.000	1.500	548.143	548.155
DP	13+55.000	1.500	548.576	548.591
DQ	13+65.000	1.500	548.963	548.980
DR	13+75.000	1.500	549.302	549.321
DS	13+85.000	1.500	549.595	549.615
DT	13+95.000	1.500	549.842	549.862
DU	14+05.000	1.500	550.041	550.063
DV	14+15.000	1.500	550.194	550.217
DW	14+25.000	1.500	550.300	550.324
DX	14+35.000	1.500	550.359	550.384
MIDSPAN 14	14+43.000	1.500	550.373	550.399
DY	14+53.000	1.500	550.348	550.373
DZ	14+63.000	1.500	550.276	550.300
EA	14+73.000	1.500	550.158	550.181
EB	14+83.000	1.500	549.993	550.014
EC	14+93.000	1.500	549.781	549.802
ED	15+03.000	1.500	549.522	549.542
EE	15+13.000	1.500	549.217	549.235
EF	15+23.000	1.500	548.865	548.881
EG	15+33.000	1.500	548.466	548.480
EH	15+43.000	1.500	548.021	548.032
EI	15+53.000	1.500	547.532	547.541
EJ	15+63.000	1.500	547.035	547.042
EK	15+73.000	1.500	546.538	546.542
EL	15+83.000	1.500	546.041	546.043
C.L. PIER 14	15+91.000	1.500	545.643	545.643
EM	16+01.000	1.500	545.146	545.150
EN	16+11.000	1.500	544.649	544.656
EO	16+21.000	1.500	544.152	544.163
EP	16+31.000	1.500	543.655	543.669
EQ	16+41.000	1.500	543.158	543.176
ER	16+51.000	1.500	542.661	542.682
ES	16+61.000	1.500	542.164	542.187
ET	16+71.000	1.500	541.667	541.693
EU	16+81.000	1.500	541.170	541.198
EV	16+91.000	1.500	540.673	540.704
EW	17+01.000	1.500	540.176	540.207
EX	17+11.000	1.500	539.679	539.710
EY	17+21.000	1.500	539.182	539.213
EZ	17+31.000	1.500	538.685	538.716
FA	17+41.000	1.500	538.188	538.219
FB	17+51.000	1.500	537.691	537.719
FC	17+61.000	1.500	537.194	537.216
FD	17+71.000	1.500	536.697	536.713
FE	17+81.000	1.500	536.200	536.210
FF	17+91.000	1.500	535.703	535.707
C.L. PIER 15	17+97.250	1.500	535.393	535.393

℄ RDWY. & STRINGER 4

LOCATION	STATION	OFFSET	THEORETICAL GRADE ELEVATIONS	THEORETICAL GRADE ELEV'S ADJ. FOR D.L. DEFLECTION
C.L. PIER 13	12+95.000	0.000	545.716	545.716
DK	13+05.000	0.000	546.213	546.215
DL	13+15.000	0.000	546.707	546.712
DM	13+25.000	0.000	547.201	547.208
DN	13+35.000	0.000	547.695	547.705
DO	13+45.000	0.000	548.174	548.186
DP	13+55.000	0.000	548.607	548.622
DQ	13+65.000	0.000	548.994	549.011
DR	13+75.000	0.000	549.333	549.352
DS	13+85.000	0.000	549.626	549.646
DT	13+95.000	0.000	549.873	549.893
DU	14+05.000	0.000	550.072	550.094
DV	14+15.000	0.000	550.225	550.248
DW	14+25.000	0.000	550.331	550.355
DX	14+35.000	0.000	550.390	550.415
MIDSPAN 14	14+43.000	0.000	550.404	550.430
DY	14+53.000	0.000	550.379	550.404
DZ	14+63.000	0.000	550.307	550.331
EA	14+73.000	0.000	550.189	550.212
EB	14+83.000	0.000	550.024	550.045
EC	14+93.000	0.000	549.812	549.833
ED	15+03.000	0.000	549.553	549.573
EE	15+13.000	0.000	549.248	549.266
EF	15+23.000	0.000	548.896	548.912
EG	15+33.000	0.000	548.497	548.511
EH	15+43.000	0.000	548.052	548.065
EI	15+53.000	0.000	547.563	547.572
EJ	15+63.000	0.000	547.066	547.073
EK	15+73.000	0.000	546.569	546.573
EL	15+83.000	0.000	546.072	546.074
C.L. PIER 14	15+91.000	0.000	545.674	545.674
EM	16+01.000	0.000	545.177	545.181
EN	16+11.000	0.000	544.680	544.687
EO	16+21.000	0.000	544.183	544.194
EP	16+31.000	0.000	543.686	543.700
EQ	16+41.000	0.000	543.189	543.207
ER	16+51.000	0.000	542.692	542.713
ES	16+61.000	0.000	542.195	542.218
ET	16+71.000	0.000	541.698	541.724
EU	16+81.000	0.000	541.201	541.229
EV	16+91.000	0.000	540.704	540.735
EW	17+01.000	0.000	540.207	540.233
EX	17+11.000	0.000	539.710	539.741
EY	17+21.000	0.000	539.213	539.244
EZ	17+31.000	0.000	538.716	538.747
FA	17+41.000	0.000	538.219	538.250
FB	17+51.000	0.000	537.722	537.750
FC	17+61.000	0.000	537.225	537.247
FD	17+71.000	0.000	536.728	536.744
FE	17+81.000	0.000	536.231	536.241
FF	17+91.000	0.000	535.734	535.738
C.L. PIER 15	17+97.250	0.000	535.424	535.424

STRINGER 4A

LOCATION	STATION	OFFSET	THEORETICAL GRADE ELEVATIONS	THEORETICAL GRADE ELEV'S ADJ. FOR D.L. DEFLECTION
C.L. PIER 13	12+95.000	-1.540	545.685	545.685
DK	13+05.000	-1.540	546.182	546.184
DL	13+15.000	-1.540	546.676	546.681
DM	13+25.000	-1.540	547.170	547.177
DN	13+35.000	-1.540	547.664	547.674
DO	13+45.000	-1.540	548.143	548.155
DP	13+55.000	-1.540	548.576	548.591
DQ	13+65.000	-1.540	548.963	548.980
DR	13+75.000	-1.540	549.302	549.321
DS	13+85.000	-1.540	549.595	549.615
DT	13+95.000	-1.540	549.842	549.862
DU	14+05.000	-1.540	550.041	550.063
DV	14+15.000	-1.540	550.194	550.217
DW	14+25.000	-1.540	550.300	550.324
DX	14+35.000	-1.540	550.359	550.384
MIDSPAN 14	14+43.000	-1.540	550.373	550.399
DY	14+53.000	-1.540	550.348	550.373
DZ	14+63.000	-1.540	550.276	550.300
EA	14+73.000	-1.540	550.158	550.181
EB	14+83.000	-1.540	549.993	550.014
EC	14+93.000	-1.540	549.781	549.802
ED	15+03.000	-1.540	549.522	549.542
EE	15+13.000	-1.540	549.217	549.235
EF	15+23.000	-1.540	548.865	548.881
EG	15+33.000	-1.540	548.466	548.480
EH	15+43.000	-1.540	548.021	548.032
EI	15+53.000	-1.540	547.532	547.541
EJ	15+63.000	-1.540	547.035	547.042
EK	15+73.000	-1.540	546.538	546.542
EL	15+83.000	-1.540	546.041	546.043
C.L. PIER 14	15+91.000	-1.540	545.643	545.643
EM	16+01.000	-1.540	545.146	545.150
EN	16+11.000	-1.540	544.649	544.656
EO	16+21.000	-1.540	544.152	544.163
EP	16+31.000	-1.540	543.655	543.669
EQ	16+41.000	-1.540	543.158	543.176
ER	16+51.000	-1.540	542.661	542.[illegible]
ES	16+61.000	-1.540	542.164	542.1[illegible]
ET	16+71.000	-1.540	541.667	541.693
EU	16+81.000	-1.540	541.170	541.198
EV	16+91.000	-1.540	540.673	540.704
EW	17+01.000	-1.540	540.176	540.207
EX	17+11.000	-1.540	539.679	539.710
EY	17+21.000	-1.540	539.182	539.213
EZ	17+31.000	-1.540	538.685	538.716
FA	17+41.000	-1.540	538.188	538.219
FB	17+51.000	-1.540	537.691	537.719
FC	17+61.000	-1.540	537.194	537.216
FD	17+71.000	-1.540	536.697	536.713
FE	17+81.000	-1.540	536.200	536.210
FF	17+91.000	-1.540	535.703	535.707
C.L. PIER 15	17+97.250	-1.540	535.393	535.393

TOP OF DECK ELEVATIONS
SPANS 14-15
CEDAR STREET BRIDGE
F.A. RTE. 669 SEC. 103B-1-4(D)
PEORIA-TAZEWELL COUNTIES

MTA, INCORPORATED

DESIGNED G.C. CHECKED J.N.
DRAWN F.D.J. DATE 12-11-87 NO. 85-12

ROUTE NO	SECTION	COUNTY	TOTAL SHEETS	SHEET NO
F.A. 669	⊗	PEORIA TAZEWELL	82	18
FED ROAD DIST NO 7	ILLINOIS	PROJECT		

⊗103B-I-4(D) SHEET 16 OF 70

ELEVATIONS — SPANS 16-17

NORTH AND SOUTH GUTTER LINE

LOCATION	STATION	OFFSET	THEORETICAL GRADE ELEVATIONS	THEORETICAL GRADE ELEV'S ADJ. FOR D.L. DEFLECTION
C.L. PIER 15	17+97.250	24.580	534.912	534.912
FG	18+07.250	24.580	534.415	534.424
FH	18+17.250	24.580	533.918	533.935
FI	18+27.250	24.580	533.421	533.447
FJ	18+37.250	24.580	532.924	532.959
FK	18+47.250	24.580	532.427	532.467
FL	18+57.250	24.580	531.930	531.973
FM	18+67.250	24.580	531.433	531.480
FN	18+77.250	24.580	530.936	530.987
FO	18+87.250	24.580	530.439	530.488
FP	18+97.250	24.580	529.942	529.988
FQ	19+07.250	24.580	529.445	529.487
FR	19+17.250	24.580	528.948	528.987
FS	19+27.250	24.580	528.451	528.484
FT	19+37.250	24.580	527.954	527.978
FU	19+47.250	24.580	527.457	527.472
FV	19+57.250	24.580	526.960	526.966
C.L. PIER 16	19+64.250	24.580	526.612	526.612
FW	19+74.250	24.580	526.115	526.124
FX	19+84.250	24.580	525.618	525.636
FY	19+94.250	24.580	525.121	525.147
FZ	20+04.250	24.580	524.624	524.659
GA	20+14.250	24.580	524.127	524.167
GB	20+24.250	24.580	523.630	523.673
GC	20+34.250	24.580	523.133	523.180
GD	20+44.250	24.580	522.636	522.687
GE	20+54.250	24.580	522.139	522.189
GF	20+64.250	24.580	521.642	521.688
GG	20+74.250	24.580	521.145	521.187
GH	20+84.250	24.580	520.648	520.687
GI	20+94.250	24.580	520.151	520.184
GJ	21+04.250	24.580	519.654	519.673
GK	21+14.250	24.580	519.157	519.172
GL	21+24.250	24.580	518.660	518.666
C.L. PIER 17	21+31.250	24.580	518.312	518.312

LONGIT. CONST. JOINT

LOCATION	STATION	OFFSET	THEORETICAL GRADE ELEVATIONS	THEORETICAL GRADE ELEV'S ADJ. FOR D.L. DEFLECTION
C.L. PIER 15	17+97.250	21.670	534.973	534.973
FG	18+07.250	21.670	534.476	534.485
FH	18+17.250	21.670	533.979	533.996
FI	18+27.250	21.670	533.482	533.508
FJ	18+37.250	21.670	532.985	533.020
FK	18+47.250	21.670	532.488	532.528
FL	18+57.250	21.670	531.991	532.034
FM	18+67.250	21.670	531.494	531.541
FN	18+77.250	21.670	530.997	531.048
FO	18+87.250	21.670	530.500	530.549
FP	18+97.250	21.670	530.003	530.049
FQ	19+07.250	21.670	529.506	529.548
FR	19+17.250	21.670	529.009	529.048
FS	19+27.250	21.670	528.512	528.545
FT	19+37.250	21.670	528.015	528.039
FU	19+47.250	21.670	527.518	527.533
FV	19+57.250	21.670	527.021	527.027
C.L. PIER 16	19+64.250	21.670	526.673	526.673
FW	19+74.250	21.670	526.176	526.185
FX	19+84.250	21.670	525.679	525.697
FY	19+94.250	21.670	525.182	525.208
FZ	20+04.250	21.670	524.685	524.720
GA	20+14.250	21.670	524.188	524.228
GB	20+24.250	21.670	523.691	523.734
GC	20+34.250	21.670	523.194	523.241
GD	20+44.250	21.670	522.697	522.748
GE	20+54.250	21.670	522.200	522.250
GF	20+64.250	21.670	521.703	521.749
GG	20+74.250	21.670	521.206	521.248
GH	20+84.250	21.670	520.709	520.748
GI	20+94.250	21.670	520.212	520.245
GJ	21+04.250	21.670	519.715	519.739
GK	21+14.250	21.670	519.218	519.235
GL	21+24.250	21.670	518.721	518.727
C.L. PIER 17	21+31.250	21.670	518.373	518.373

STRINGERS 1 AND 7

LOCATION	STATION	OFFSET	THEORETICAL GRADE ELEVATIONS	THEORETICAL GRADE ELEV'S ADJ. FOR D.L. DEFLECTION
C.L. PIER 15	17+97.250	20.000	535.007	535.007
FG	18+07.250	20.000	534.510	534.519
FH	18+17.250	20.000	534.013	534.030
FI	18+27.250	20.000	533.516	533.542
FJ	18+37.250	20.000	533.019	533.054
FK	18+47.250	20.000	532.522	532.562
FL	18+57.250	20.000	532.025	532.068
FM	18+67.250	20.000	531.528	531.575
FN	18+77.250	20.000	531.031	531.082
FO	18+87.250	20.000	530.534	530.583
FP	18+97.250	20.000	530.037	530.083
FQ	19+07.250	20.000	529.540	529.582
FR	19+17.250	20.000	529.043	529.082
FS	19+27.250	20.000	528.546	528.579
FT	19+37.250	20.000	528.049	528.073
FU	19+47.250	20.000	527.552	527.567
FV	19+57.250	20.000	527.055	527.061
C.L. PIER 16	19+64.250	20.000	526.707	526.707
FW	19+74.250	20.000	526.210	526.219
FX	19+84.250	20.000	525.713	525.731
FY	19+94.250	20.000	525.216	525.242
FZ	20+04.250	20.000	524.719	524.754
GA	20+14.250	20.000	524.222	524.262
GB	20+24.250	20.000	523.725	523.768
GC	20+34.250	20.000	523.228	523.275
GD	20+44.250	20.000	522.731	522.782
GE	20+54.250	20.000	522.234	522.284
GF	20+64.250	20.000	521.737	521.785
GG	20+74.250	20.000	521.240	521.282
GH	20+84.250	20.000	520.743	520.782
GI	20+94.250	20.000	520.246	520.279
GJ	21+04.250	20.000	519.749	519.773
GK	21+14.250	20.000	519.252	519.267
GL	21+24.250	20.000	518.755	518.761
C.L. PIER 17	21+31.250	20.000	518.407	518.407

For Dead Load Deflection Diagram and related information See Sheet 10.

For fillet details see sheet 7.

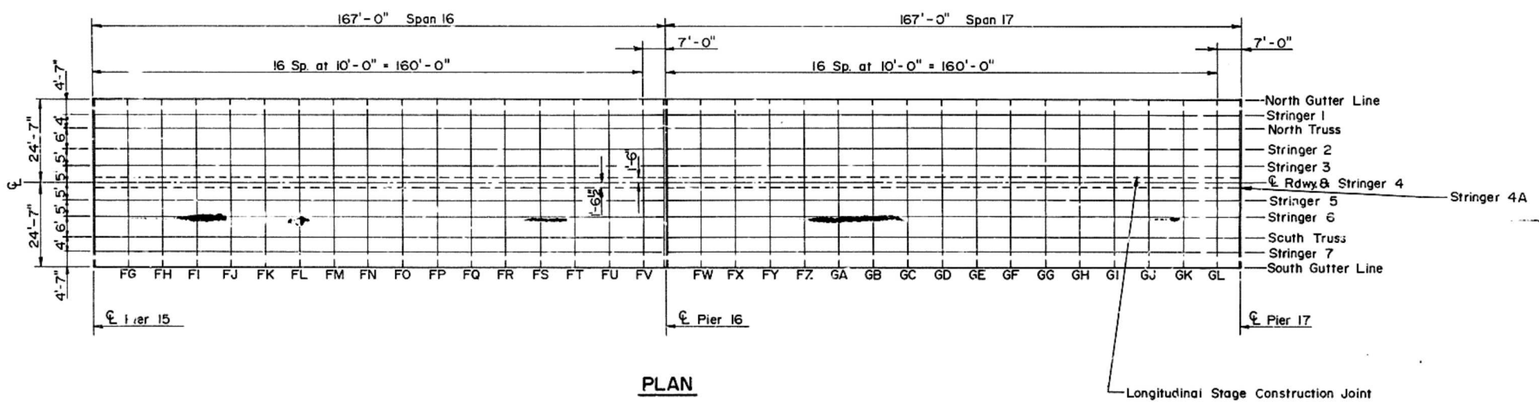

PLAN

TOP OF DECK ELEVATIONS
SPANS 16-17
CEDAR STREET BRIDGE
F.A. RTE. 669 SEC. 103B-I-4(D)
PEORIA-TAZEWELL COUNTIES

MTA, INCORPORATED

DESIGNED J.N. CHECKED G.B.M.
DRAWN K.T.B. DATE 12-11-87 NO. 85-12

ROUTE NO.	SECTION	COUNTY	TOTAL SHEETS	SHEET NO
FA 669	⊗	PEORIA TAZEWELL	82	19
FED. ROAD DIST. NO. 7	ILLINOIS	PROJECT [redacted]		

⊗ 103B-1-4(D) SHEET 17 OF 70

ELEVATIONS - SPANS 16-17

NORTH AND SOUTH TRUSSES

LOCATION	STATION	OFFSET	THEORETICAL GRADE ELEVATIONS	THEORETICAL GRADE ELEV'S ADJ. FOR D.L. DEFLECTION
C.L. PIER 15	17+97.250	16.000	535.091	535.091
FG	18+07.250	16.000	534.594	534.603
FH	18+17.250	16.000	534.097	534.114
FI	18+27.250	16.000	533.600	533.626
FJ	18+37.250	16.000	533.103	533.138
FK	18+47.250	16.000	532.606	532.646
FL	18+57.250	16.000	532.109	532.152
FM	18+67.250	16.000	531.612	531.659
FN	18+77.250	16.000	531.115	531.166
FO	18+87.250	16.000	530.618	530.667
FP	18+97.250	16.000	530.121	530.167
FQ	19+07.250	16.000	529.624	529.666
FR	19+17.250	16.000	529.127	529.166
FS	19+27.250	16.000	528.630	528.663
FT	19+37.250	16.000	528.133	528.157
FU	19+47.250	16.000	527.636	527.651
FV	19+57.250	16.000	527.139	527.145
C.L. PIER 16	19+64.250	16.000	526.791	526.791
FW	19+74.250	16.000	526.294	526.303
FX	19+84.250	16.000	525.797	525.815
FY	19+94.250	16.000	525.300	525.326
FZ	20+04.250	16.000	524.803	524.838
GA	20+14.250	16.000	524.306	524.346
GB	20+24.250	16.000	523.809	523.852
GC	20+34.250	16.000	523.312	523.359
GD	20+44.250	16.000	522.815	522.866
GE	20+54.250	16.000	522.318	522.368
GF	20+64.250	16.000	521.821	521.867
GG	20+74.250	16.000	521.324	521.366
GH	20+84.250	16.000	520.827	520.866
GI	20+94.250	16.000	520.330	520.363
GJ	21+04.250	16.000	519.833	519.857
GK	21+14.250	16.000	519.336	519.351
GL	21+24.250	16.000	518.839	518.845
C.L. PIER 17	21+31.250	16.000	518.491	518.491

STRINGERS 2 AND 6

LOCATION	STATION	OFFSET	THEORETICAL GRADE ELEVATIONS	THEORETICAL GRADE ELEV'S ADJ. FOR D.L. DEFLECTION
C.L. PIER 15	17+97.250	10.000	535.216	535.216
FG	18+07.250	10.000	534.719	534.728
FH	18+17.250	10.000	534.222	534.239
FI	18+27.250	10.000	533.725	533.751
FJ	18+37.250	10.000	533.228	533.263
FK	18+47.250	10.000	532.731	532.771
FL	18+57.250	10.000	532.234	532.277
FM	18+67.250	10.000	531.737	531.784
FN	18+77.250	10.000	531.240	531.291
FO	18+87.250	10.000	530.743	530.792
FP	18+97.250	10.000	530.246	530.292
FQ	19+07.250	10.000	529.749	529.791
FR	19+17.250	10.000	529.252	529.291
FS	19+27.250	10.000	528.755	528.788
FT	19+37.250	10.000	528.258	528.282
FU	19+47.250	10.000	527.761	527.776
FV	19+57.250	10.000	527.264	527.270
C.L. PIER 16	19+64.250	10.000	526.916	526.916
FW	19+74.250	10.000	526.419	526.428
FX	19+84.250	10.000	525.922	525.940
FY	19+94.250	10.000	525.425	525.451
FZ	20+04.250	10.000	524.928	524.963
GA	20+14.250	10.000	524.431	524.471
GB	20+24.250	10.000	523.934	523.977
GC	20+34.250	10.000	523.437	523.484
GD	20+44.250	10.000	522.940	522.991
GE	20+54.250	10.000	522.443	522.493
GF	20+64.250	10.000	521.946	521.992
GG	20+74.250	10.000	521.449	521.491
GH	20+84.250	10.000	520.952	520.991
GI	20+94.250	10.000	520.455	520.488
GJ	21+04.250	10.000	519.958	519.982
GK	21+14.250	10.000	519.461	519.476
GL	21+24.250	10.000	518.964	518.970
C.L. PIER 17	21+31.250	10.000	518.616	518.616

STRINGERS 3 AND 5

LOCATION	STATION	OFFSET	THEORETICAL GRADE ELEVATIONS	THEORETICAL GRADE ELEV'S ADJ. FOR D.L. DEFLECTION
C.L. PIER 15	17+97.250	5.000	535.320	535.320
FG	18+07.250	5.000	534.823	534.832
FH	18+17.250	5.000	534.326	534.343
FI	18+27.250	5.000	533.829	533.855
FJ	18+37.250	5.000	533.332	533.367
FK	18+47.250	5.000	532.835	532.875
FL	18+57.250	5.000	532.338	532.381
FM	18+67.250	5.000	531.841	531.888
FN	18+77.250	5.000	531.344	531.395
FO	18+87.250	5.000	530.847	530.896
FP	18+97.250	5.000	530.350	530.396
FQ	19+07.250	5.000	529.853	529.895
FR	19+17.250	5.000	529.356	529.395
FS	19+27.250	5.000	528.859	528.892
FT	19+37.250	5.000	528.362	528.386
FU	19+47.250	5.000	527.865	527.880
FV	19+57.250	5.000	527.368	527.374
C.L. PIER 16	19+64.250	5.000	527.020	527.020
FW	19+74.250	5.000	526.523	526.532
FX	19+84.250	5.000	526.026	526.044
FY	19+94.250	5.000	525.529	525.555
FZ	20+04.250	5.000	525.032	525.067
GA	20+14.250	5.000	524.535	524.575
GB	20+24.250	5.000	524.038	524.081
GC	20+34.250	5.000	523.541	523.588
GD	20+44.250	5.000	523.044	523.095
GE	20+54.250	5.000	522.547	522.597
GF	20+64.250	5.000	522.050	522.096
GG	20+74.250	5.000	521.553	521.595
GH	20+84.250	5.000	521.056	521.095
GI	20+94.250	5.000	520.559	520.592
GJ	21+04.250	5.000	520.062	520.086
GK	21+14.250	5.000	519.565	519.580
GL	21+24.250	5.000	519.068	519.074
C.L. PIER 17	21+31.250	5.000	518.720	518.720

TOP OF DECK ELEVATIONS
SPANS 16-17
CEDAR STREET BRIDGE
F.A. RTE. 669 SEC. 103B-1-4(D)
PEORIA-TAZEWELL COUNTIES

MTA, INCORPORATED

DESIGNED G.C. CHECKED J.N.
DRAWN F.D.J. DATE 12-11-87 NO. 85-12

ROUTE NO.	SECTION	COUNTY	TOTAL SHEETS	SHEET NO.
F.A. 669	⊗	PEORIA TAZEWELL	82	20
FED. ROAD DIST. NO. 7		ILLINOIS	PROJECT	~~BHF-669(-)~~
⊗103B-1-4(D)			SHEET 18 OF 70	

ELEVATIONS – SPANS 16-17

STAGE CONST. JOINT

LOCATION	STATION	OFFSET	THEORETICAL GRADE ELEVATIONS	THEORETICAL GRADE ELEV'S ADJ. FOR D.L. DEFLECTION
C.L. PIER 15	17+97.250	1.500	535.393	535.393
FG	18+07.250	1.500	534.896	534.905
FH	18+17.250	1.500	534.399	534.416
FI	18+27.250	1.500	533.902	533.928
FJ	18+37.250	1.500	533.405	533.440
FK	18+47.250	1.500	532.908	532.948
FL	18+57.250	1.500	532.411	532.454
FM	18+67.250	1.500	531.914	531.961
FN	18+77.250	1.500	531.417	531.468
FO	18+87.250	1.500	530.920	530.969
FP	18+97.250	1.500	530.423	530.469
FQ	19+07.250	1.500	529.926	529.968
FR	19+17.250	1.500	529.429	529.468
FS	19+27.250	1.500	528.932	528.965
FT	19+37.250	1.500	528.435	528.459
FU	19+47.250	1.500	527.938	527.953
FV	19+57.250	1.500	527.441	527.447
C.L. PIER 16	19+64.250	1.500	527.093	527.093
FW	19+74.250	1.500	526.596	526.605
FX	19+84.250	1.500	526.099	526.117
FY	19+94.250	1.500	525.602	525.628
FZ	20+04.250	1.500	525.105	525.140
GA	20+14.250	1.500	524.608	524.648
GB	20+24.250	1.500	524.111	524.154
GC	20+34.250	1.500	523.614	523.661
GD	20+44.250	1.500	523.117	523.168
GE	20+54.250	1.500	522.620	522.670
GF	20+64.250	1.500	522.123	522.169
GG	20+74.250	1.500	521.626	521.668
GH	20+84.250	1.500	521.129	521.168
GI	20+94.250	1.500	520.632	520.665
GJ	21+04.250	1.500	520.135	520.159
GK	21+14.250	1.500	519.638	519.653
GL	21+24.250	1.500	519.141	519.147
C.L. PIER 17	21+31.250	1.500	518.793	518.793

℄ RDWY. & STRINGER 4

LOCATION	STATION	OFFSET	THEORETICAL GRADE ELEVATIONS	THEORETICAL GRADE ELEV'S ADJ. FOR D.L. DEFLECTION
C.L. PIER 15	17+97.250	0.000	535.424	535.424
FG	18+07.250	0.000	534.927	534.936
FH	18+17.250	0.000	534.430	534.447
FI	18+27.250	0.000	533.933	533.959
FJ	18+37.250	0.000	533.436	533.471
FK	18+47.250	0.000	532.939	532.979
FL	18+57.250	0.000	532.442	532.485
FM	18+67.250	0.000	531.945	531.992
FN	18+77.250	0.000	531.448	531.499
FO	18+87.250	0.000	530.951	531.000
FP	18+97.250	0.000	530.454	530.500
FQ	19+07.250	0.000	529.957	529.999
FR	19+17.250	0.000	529.460	529.499
FS	19+27.250	0.000	528.963	528.996
FT	19+37.250	0.000	528.466	528.490
FU	19+47.250	0.000	527.969	527.984
FV	19+57.250	0.000	527.472	527.478
C.L. PIER 16	19+64.250	0.000	527.124	527.124
FW	19+74.250	0.000	526.627	526.636
FX	19+84.250	0.000	526.130	526.148
FY	19+94.250	0.000	525.633	525.659
FZ	20+04.250	0.000	525.136	525.171
GA	20+14.250	0.000	524.639	524.679
GB	20+24.250	0.000	524.142	524.185
GC	20+34.250	0.000	523.645	523.692
GD	20+44.250	0.000	523.148	523.199
GE	20+54.250	0.000	522.651	522.701
GF	20+64.250	0.000	522.154	522.200
GG	20+74.250	0.000	521.657	521.699
GH	20+84.250	0.000	521.160	521.199
GI	20+94.250	0.000	520.663	520.696
GJ	21+04.250	0.000	520.166	520.190
GK	21+14.250	0.000	519.669	519.684
GL	21+24.250	0.000	519.172	519.178
C.L. PIER 17	21+31.250	0.000	518.824	518.824

STRINGER 4A

LOCATION	STATION	OFFSET	THEORETICAL GRADE ELEVATIONS	THEORETICAL GRADE ELEV'S ADJ. FOR D.L. DEFLECTION
C.L. PIER 15	17+97.250	-1.540	535.393	535.393
FG	18+07.250	-1.540	534.896	534.905
FH	18+17.250	-1.540	534.399	534.416
FI	18+27.250	-1.540	533.902	533.928
FJ	18+37.250	-1.540	533.405	533.440
FK	18+47.250	-1.540	532.908	532.948
FL	18+57.250	-1.540	532.411	532.454
FM	18+67.250	-1.540	531.914	531.961
FN	18+77.250	-1.540	531.417	531.468
FO	18+87.250	-1.540	530.920	530.969
FP	18+97.250	-1.540	530.423	530.469
FQ	19+07.250	-1.540	529.926	529.968
FR	19+17.250	-1.540	529.429	529.468
FS	19+27.250	-1.540	528.932	528.965
FT	19+37.250	-1.540	528.435	528.459
FU	19+47.250	-1.540	527.938	527.953
FV	19+57.250	-1.540	527.441	527.447
C.L. PIER 16	19+64.250	-1.540	527.093	527.093
FW	19+74.250	-1.540	526.596	526.605
FX	19+84.250	-1.540	526.099	526.117
FY	19+94.250	-1.540	525.602	525.628
FZ	20+04.250	-1.540	525.105	525.140
GA	20+14.250	-1.540	524.608	524.648
GB	20+24.250	-1.540	524.111	524.154
GC	20+34.250	-1.540	523.614	523.661
GD	20+44.250	-1.540	523.117	523.168
GE	20+54.250	-1.540	522.620	522.670
GF	20+64.250	-1.540	522.123	522.169
GG	20+74.250	-1.540	521.626	521.668
GH	20+84.250	-1.540	521.129	521.168
GI	20+94.250	-1.540	520.632	520.665
GJ	21+04.250	-1.540	520.135	520.159
GK	21+14.250	-1.540	519.638	519.653
GL	21+24.250	-1.540	519.141	519.147
C.L. PIER 17	21+31.250	-1.540	518.793	518.793

TOP OF DECK ELEVATIONS
SPANS 16-17
CEDAR STREET BRIDGE
F.A. RTE. 669 SEC. 103B-1-4(D)
PEORIA-TAZEWELL COUNTIES

MTA, INCORPORATED

DESIGNED G.C. CHECKED J.N.
DRAWN F.D.J. DATE 12-11-87 NO. 85-12

ROUTE NO	SECTION	COUNTY	TOTAL SHEETS	SHEET NO
F.A. 669	⊗	PEORIA TAZEWELL	82	21
FED ROAD DIST NO 7	ILLINOIS	PROJECT . ~~BHF-669(-)~~		
⊗ 103B-1-4 (D)		SHEET 19 OF 70		

ELEVATIONS – SPANS 18–21

NORTH AND SOUTH GUTTER

LOCATION	STATION	OFFSET	THEORETICAL GRADE ELEVATIONS	THEORETICAL GRADE ELEV'S ADJ. FOR D.L. DEFLECTION
C.L. PIER 17	21+31.250	24.580	518.312	518.312
GM	21+41.250	24.580	517.815	517.824
GN	21+51.250	24.580	517.318	517.336
GO	21+61.250	24.580	516.821	516.848
GP	21+71.250	24.580	516.324	516.360
GQ	21+81.250	24.580	515.827	515.867
GR	21+91.250	24.580	515.330	515.374
GS	22+01.250	24.580	514.833	514.881
GT	22+11.250	24.580	514.336	514.388
GU	22+21.250	24.580	513.839	513.888
GV	22+31.250	24.580	513.340	513.385
GW	22+41.250	24.580	512.864	512.905
GX	22+51.250	24.580	512.409	512.447
GY	22+61.250	24.580	511.976	512.006
GZ	22+71.250	24.580	511.566	511.586
HA	22+81.250	24.580	511.177	511.188
C.L. PIER 18	22+93.550	24.580	510.729	510.729
HB	23+03.550	24.580	510.389	510.398
HC	23+13.550	24.580	510.071	510.089
HD	23+23.550	24.580	509.775	509.802
HE	23+33.550	24.580	509.501	509.538
HF	23+43.550	24.580	509.249	509.290
HG	23+53.550	24.580	509.017	509.061
HH	23+63.550	24.580	508.788	508.836
HI	23+73.550	24.580	508.559	508.610
HJ	23+83.550	24.580	508.330	508.379
HK	23+93.550	24.580	508.101	508.146
HL	24+03.550	24.580	507.872	507.913
HM	24+13.550	24.580	507.643	507.681
HN	24+23.550	24.580	507.414	507.443
HO	24+33.550	24.580	507.185	507.205
HP	24+43.550	24.580	506.956	506.967
C.L. PIER 19	24+56.010	24.580	506.671	506.671
HQ	24+66.010	24.580	506.442	506.487
HR	24+76.010	24.580	506.213	506.304
HS	24+86.010	24.580	505.984	506.107
HT	24+96.010	24.580	505.755	505.897
HU	25+06.010	24.580	505.526	505.687
HV	25+16.010	24.580	505.297	505.441
HW	25+26.010	24.580	505.068	505.193
HX	25+36.010	24.580	504.839	504.935
HY	25+46.010	24.580	504.610	504.660
C.L. PIER 20	25+57.090	24.580	504.356	504.356
HZ	25+67.090	24.580	504.127	504.172
IA	25+77.090	24.580	503.898	503.989
IB	25+87.090	24.580	503.669	503.793
IC	25+97.090	24.580	503.440	503.582
ID	26+07.090	24.580	503.211	503.372
IE	26+17.090	24.580	502.982	503.126
IF	26+27.090	24.580	502.753	502.879
IG	26+37.090	24.580	502.524	502.620
IH	26+47.090	24.580	502.295	502.345
C.L. PIER 21	26+58.160	24.580	502.041	502.041

LONGIT. CONST. JOINT

LOCATION	STATION	OFFSET	THEORETICAL GRADE ELEVATIONS	THEORETICAL GRADE ELEV'S ADJ. FOR D.L. DEFLECTION
C.L. PIER 17	21+31.250	21.670	518.373	518.373
GM	21+41.250	21.670	517.876	517.885
GN	21+51.250	21.670	517.379	517.397
GO	21+61.250	21.670	516.882	516.909
GP	21+71.250	21.670	516.385	516.421
GQ	21+81.250	21.670	515.888	515.928
GR	21+91.250	21.670	515.391	515.435
GS	22+01.250	21.670	514.894	514.942
GT	22+11.250	21.670	514.397	514.449
GU	22+21.250	21.670	513.900	513.949
GV	22+31.250	21.670	513.401	513.446
GW	22+41.250	21.670	512.925	512.966
GX	22+51.250	21.670	512.470	512.508
GY	22+61.250	21.670	512.037	512.067
GZ	22+71.250	21.670	511.627	511.647
HA	22+81.250	21.670	511.238	511.249
C.L. PIER 18	22+93.550	21.670	510.790	510.790
HB	23+03.550	21.670	510.450	510.459
HC	23+13.550	21.670	510.132	510.150
HD	23+23.550	21.670	509.836	509.863
HE	23+33.550	21.670	509.562	509.599
HF	23+43.550	21.670	509.310	509.351
HG	23+53.550	21.670	509.078	509.122
HH	23+63.550	21.670	508.849	508.897
HI	23+73.550	21.670	508.620	508.671
HJ	23+83.550	21.670	508.391	508.440
HK	23+93.550	21.670	508.162	508.207
HL	24+03.550	21.670	507.933	507.974
HM	24+13.550	21.670	507.704	507.742
HN	24+23.550	21.670	507.475	507.504
HO	24+33.550	21.670	507.246	507.266
HP	24+43.550	21.670	507.017	507.028
C.L. PIER 19	24+56.010	21.670	506.732	506.732
HQ	24+66.010	21.670	506.503	506.548
HR	24+76.010	21.670	506.274	506.365
HS	24+86.010	21.670	506.045	506.168
HT	24+96.010	21.670	505.816	505.958
HU	25+06.010	21.670	505.587	505.748
HV	25+16.010	21.670	505.358	505.502
HW	25+26.010	21.670	505.129	505.254
HX	25+36.010	21.670	504.900	504.996
HY	25+46.010	21.670	504.671	504.721
C.L. PIER 20	25+57.090	21.670	504.417	504.417
HZ	25+67.090	21.670	504.188	504.233
IA	25+77.090	21.670	503.959	504.050
IB	25+87.090	21.670	503.730	503.854
IC	25+97.090	21.670	503.501	503.643
ID	26+07.090	21.670	503.272	503.433
IE	26+17.090	21.670	503.043	503.187
IF	26+27.090	21.670	502.814	502.940
IG	26+37.090	21.670	502.585	502.681
IH	26+47.090	21.670	502.356	502.406
C.L. PIER 21	26+58.160	21.670	502.102	502.102

STRINGERS 1 AND 7

LOCATION	STATION	OFFSET	THEORETICAL GRADE ELEVATIONS	THEORETICAL GRADE ELEV'S ADJ. FOR D.L. DEFLECTION
C.L. PIER 17	21+31.250	20.000	518.407	518.407
GM	21+41.250	20.000	517.910	517.919
GN	21+51.250	20.000	517.413	517.431
GO	21+61.250	20.000	516.916	516.943
GP	21+71.250	20.000	516.419	516.455
GQ	21+81.250	20.000	515.922	515.962
GR	21+91.250	20.000	515.425	515.469
GS	22+01.250	20.000	514.928	514.976
GT	22+11.250	20.000	514.431	514.483
GU	22+21.250	20.000	513.934	513.983
GV	22+31.250	20.000	513.435	513.480
GW	22+41.250	20.000	512.959	513.000
GX	22+51.250	20.000	512.504	512.542
GY	22+61.250	20.000	512.071	512.101
GZ	22+71.250	20.000	511.661	511.681
HA	22+81.250	20.000	511.272	511.283
C.L. PIER 18	22+93.550	20.000	510.824	510.824
HB	23+03.550	20.000	510.484	510.493
HC	23+13.550	20.000	510.166	510.184
HD	23+23.550	20.000	509.870	509.897
HE	23+33.550	20.000	509.596	509.633
HF	23+43.550	20.000	509.344	509.385
HG	23+53.550	20.000	509.112	509.156
HH	23+63.550	20.000	508.883	508.931
HI	23+73.550	20.000	508.654	508.705
HJ	23+83.550	20.000	508.425	508.474
HK	23+93.550	20.000	508.196	508.241
HL	24+03.550	20.000	507.967	508.008
HM	24+13.550	20.000	507.739	507.776
HN	24+23.550	20.000	507.509	507.538
HO	24+33.550	20.000	507.280	507.300
HP	24+43.550	20.000	507.051	507.062
C.L. PIER 19	24+56.010	20.000	506.766	506.766
HQ	24+66.010	20.000	506.537	506.582
HR	24+76.010	20.000	506.308	506.399
HS	24+86.010	20.000	506.079	506.202
HT	24+96.010	20.000	505.850	505.992
HU	25+06.010	20.000	505.621	505.782
HV	25+16.010	20.000	505.392	505.536
HW	25+26.010	20.000	505.163	505.288
HX	25+36.010	20.000	504.934	505.030
HY	25+46.010	20.000	504.705	504.755
C.L. PIER 20	25+57.090	20.000	504.451	504.451
HZ	25+67.090	20.000	504.222	504.267
IA	25+77.090	20.000	503.993	504.084
IB	25+87.090	20.000	503.764	503.888
IC	25+97.090	20.000	503.535	503.677
ID	26+07.090	20.000	503.306	503.467
IE	26+17.090	20.000	503.077	503.221
IF	26+27.090	20.000	502.848	502.974
IG	26+37.090	20.000	502.619	502.715
IH	26+47.090	20.000	502.390	502.440
C.L. PIER 21	26+58.160	20.000	502.136	502.136

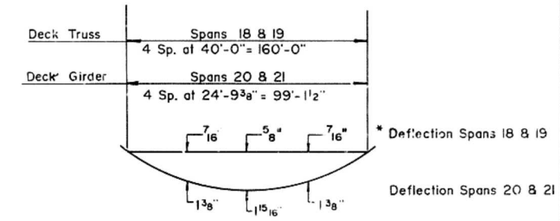

DEAD LOAD DEFLECTION DIAGRAM

(Includes Weight of Concrete Only)

The above deflections are not to be used in the field if the Engineer is working from the grade elevations adjusted for dead load deflections as shown.

NOTE: Individual stringer and concrete edge beam deflection between panel points equals 1/16" max., negligible.

* See Note on sheet 20.

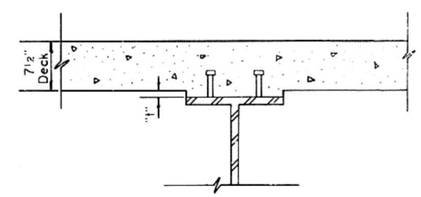

STANDARD FILLET DETAIL

To determine "t" after the existing concrete deck has been removed, elevations of the top flanges of the existing stringers, girders or trusses shall be taken at intervals shown on the elevation sheets. These elevations subtracted from the "Theoretical Grade Elevations Adjusted for Dead Load Deflection" minus deck thickness equals the fillet height "t" above top flange of beams.

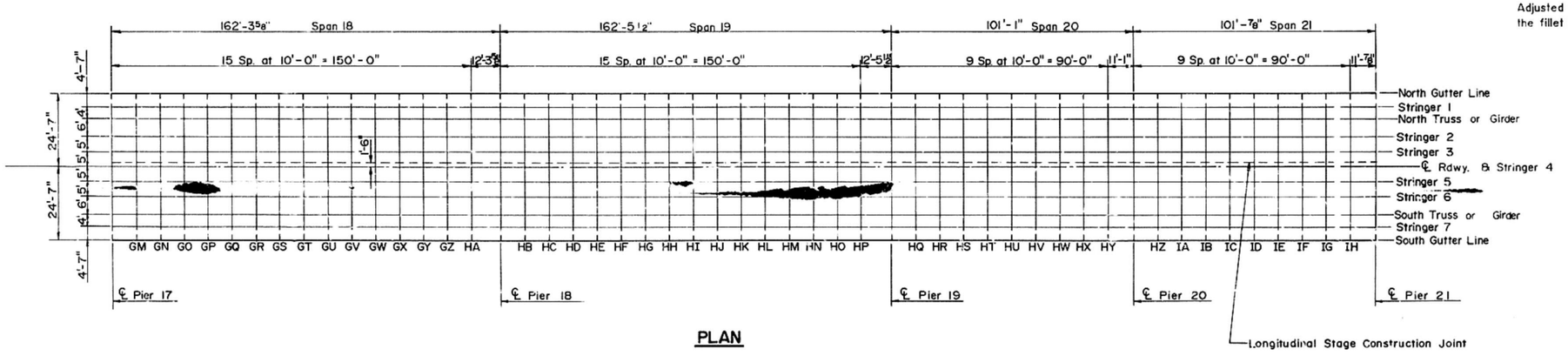

PLAN

TOP OF DECK ELEVATIONS
SPANS 18–21
CEDAR STREET BRIDGE
F.A. RTE. 669 SEC. 103B-1-4(D)
PEORIA–TAZEWELL COUNTIES

MTA, INCORPORATED

DESIGNED J.N. CHECKED G.B.M.
DRAWN K.T.B. DATE 12-11-87 NO. 85-12

ROUTE NO	SECTION	COUNTY	TOTAL SHEETS	SHEET NO
FA 669	(8)	PEORIA TAZEWELL	8	22
FED ROAD DIST NO 7	ILLINOIS	PROJECT BHF-6604(-)		
(8) 103 B-I-4 (D)		SHEET 20 OF 70		

ELEVATIONS – SPANS 18–21

NO. & SO. TRUSSES OR GIRDERS

LOCATION	STATION	OFFSET	THEORETICAL GRADE ELEVATIONS	THEORETICAL GRADE ELEV'S ADJ. FOR D.L. DEFLECTION
C.L. PIER 17	21+31.250	16.000	518.491	518.491
GM	21+41.250	16.000	517.994	518.003
GN	21+51.250	16.000	517.497	517.515
GO	21+61.250	16.000	517.000	517.027
GP	21+71.250	16.000	516.503	516.539
GQ	21+81.250	16.000	516.006	516.046
GR	21+91.250	16.000	515.509	515.553
GS	22+01.250	16.000	515.012	515.060
GT	22+11.250	16.000	514.515	514.567
GU	22+21.250	16.000	514.018	514.067
GV	22+31.250	16.000	513.519	513.564
GW	22+41.250	16.000	513.043	513.084
GX	22+51.250	16.000	512.588	512.626
GY	22+61.250	16.000	512.155	512.185
GZ	22+71.250	16.000	511.745	511.765
HA	22+81.250	16.000	511.356	511.367
C.L. PIER 18	22+93.550	16.000	510.908	510.908
HB	23+03.550	16.000	510.568	510.577
HC	23+13.550	16.000	510.250	510.268
HD	23+23.550	16.000	509.954	509.981
HE	23+33.550	16.000	509.680	509.717
HF	23+43.550	16.000	509.428	509.469
HG	23+53.550	16.000	509.196	509.240
HH	23+63.550	16.000	508.967	509.015
HI	23+73.550	16.000	508.738	508.789
HJ	23+83.550	16.000	508.509	508.558
HK	23+93.550	16.000	508.280	508.325
HL	24+03.550	16.000	508.051	508.092
HM	24+13.550	16.000	507.822	507.860
HN	24+23.550	16.000	507.593	507.622
HO	24+33.550	16.000	507.364	507.384
HP	24+43.550	16.000	507.135	507.146
C.L. PIER 19	24+56.010	16.000	506.850	506.850
HQ	24+66.010	16.000	506.621	506.666
HR	24+76.010	16.000	506.392	506.483
HS	24+86.010	16.000	506.163	506.286
HT	24+96.010	16.000	505.934	506.076
HU	25+06.010	16.000	505.705	505.866
HV	25+16.010	16.000	505.476	505.620
HW	25+26.010	16.000	505.247	505.372
HX	25+36.010	16.000	505.018	505.114
HY	25+46.010	16.000	504.789	[redacted]
C.L. PIER 20	25+57.090	16.000	504.535	504.535
HZ	25+67.090	16.000	504.306	504.351
IA	25+77.090	16.000	504.077	504.168
IB	25+87.090	16.000	503.843	503.972
IC	25+97.090	16.000	503.619	503.761
ID	26+07.090	16.000	503.390	503.551
IE	26+17.090	16.000	503.161	503.305
IF	26+27.090	16.000	502.932	503.058
IG	26+37.090	16.000	502.703	502.799
IH	25+47.090	16.000	502.474	502.524
C.L. PIER 21	26+58.160	16.000	502.220	502.220

STRINGERS 2 AND 6

LOCATION	STATION	OFFSET	THEORETICAL GRADE ELEVATIONS	THEORETICAL GRADE ELEV'S ADJ. FOR D.L. DEFLECTION
C.L. PIER 17	21+31.250	10.000	518.616	518.616
GM	21+41.250	10.000	518.119	518.128
GN	21+51.250	10.000	517.622	517.640
GO	21+61.250	10.000	517.125	517.152
GP	21+71.250	10.000	516.628	516.664
GQ	21+81.250	10.000	516.131	516.171
GR	21+91.250	10.000	515.634	515.678
GS	22+01.250	10.000	515.137	515.185
GT	22+11.250	10.000	514.640	514.692
GU	22+21.250	10.000	514.143	514.192
GV	22+31.250	10.000	513.644	513.689
GW	22+41.250	10.000	513.168	513.209
GX	22+51.250	10.000	512.713	512.751
GY	22+61.250	10.000	512.280	512.310
GZ	22+71.250	10.000	511.870	511.896
HA	22+81.250	10.000	511.481	511.492
C.L. PIER 18	22+93.550	10.000	511.033	511.033
HB	23+03.550	10.000	510.693	510.702
HC	23+13.550	10.000	510.375	510.393
HD	23+23.550	10.000	510.079	510.106
HE	23+33.550	10.000	509.805	509.842
HF	23+43.550	10.000	509.553	509.594
HG	23+53.550	10.000	509.321	509.365
HH	23+63.550	10.000	509.092	509.140
HI	23+73.550	10.000	508.863	508.914
HJ	23+83.550	10.000	508.634	508.683
HK	23+93.550	10.000	508.405	508.450
HL	24+03.550	10.000	508.176	508.217
HM	24+13.550	10.000	507.947	507.985
HN	24+23.550	10.000	507.718	507.747
HO	24+33.550	10.000	507.489	507.509
HP	24+43.550	10.000	507.250	507.271
C.L. PIER 19	24+56.010	10.000	506.975	506.975
HQ	24+66.010	10.000	506.746	506.791
HR	24+76.010	10.000	506.517	506.608
HS	24+86.010	10.000	506.288	506.411
HT	24+96.010	10.000	506.059	506.201
HU	25+06.010	10.000	505.830	505.991
HV	25+16.010	10.000	505.601	505.745
HW	25+26.010	10.000	505.372	505.497
HX	25+36.010	10.000	505.143	505.239
HY	25+46.010	10.000	[redacted]	504.964
C.L. PIER 20	25+57.090	10.000	504.660	504.660
HZ	25+67.090	10.000	504.431	504.476
IA	25+77.090	10.000	504.202	504.293
IB	25+87.090	10.000	503.973	504.097
IC	25+97.090	10.000	503.744	503.886
ID	26+07.090	10.000	503.515	503.676
IE	26+17.090	10.000	503.286	503.430
IF	26+27.090	10.000	503.057	503.183
IG	26+37.090	10.000	502.828	502.924
IH	26+47.090	10.000	502.599	502.649
C.L. PIER 21	26+58.160	10.000	502.345	502.345

STRINGERS 3 AND 5

LOCATION	STATION	OFFSET	THEORETICAL GRADE ELEVATIONS	THEORETICAL GRADE ELEV'S ADJ. FOR D.L. DEFLECTION
C.L. PIER 17	21+31.250	5.000	518.720	518.720
GM	21+41.250	5.000	518.223	518.232
GN	21+51.250	5.000	517.726	517.744
GO	21+61.250	5.000	517.229	517.256
GP	21+71.250	5.000	516.732	516.768
GQ	21+81.250	5.000	516.235	516.275
GR	21+91.250	5.000	515.738	515.782
GS	22+01.250	5.000	515.241	515.289
GT	22+11.250	5.000	514.744	514.796
GU	22+21.250	5.000	514.247	514.296
GV	22+31.250	5.000	513.748	513.793
GW	22+41.250	5.000	513.272	513.313
GX	22+51.250	5.000	512.817	512.855
GY	22+61.250	5.000	512.384	512.414
GZ	22+71.250	5.000	511.974	511.994
HA	22+81.250	5.000	511.585	511.596
C.L. PIER 18	22+93.550	5.000	511.137	511.137
HB	23+03.550	5.000	510.797	510.806
HC	23+13.550	5.000	510.479	510.497
HD	23+23.550	5.000	510.183	510.210
HE	23+33.550	5.000	509.909	509.946
HF	23+43.550	5.000	509.657	509.698
HG	23+53.550	5.000	509.425	509.469
HH	23+63.550	5.000	509.196	509.244
HI	23+73.550	5.000	508.967	509.018
HJ	23+83.550	5.000	508.738	508.787
HK	23+93.550	5.000	508.509	508.554
HL	24+03.550	5.000	508.280	508.321
HM	24+13.550	5.000	508.051	508.089
HN	24+23.550	5.000	507.822	507.851
HO	24+33.550	5.000	507.593	507.613
HP	24+43.550	5.000	507.364	507.375
C.L. PIER 19	24+56.010	5.000	507.079	507.079
HQ	24+66.010	5.000	506.850	506.895
HR	24+76.010	5.000	506.621	506.712
HS	24+86.010	5.000	506.392	506.515
HT	24+96.010	5.000	506.163	506.305
HU	25+06.010	5.000	505.934	506.095
HV	25+16.010	5.000	505.705	505.849
HW	25+26.010	5.000	505.476	505.601
HX	25+36.010	5.000	505.247	505.343
HY	25+46.010	5.000	505.018	505.068
C.L. PIER 20	25+57.090	5.000	504.764	504.764
HZ	25+67.090	5.000	504.535	504.580
IA	25+77.090	5.000	504.306	504.397
IB	25+87.090	5.000	504.077	504.201
IC	25+97.090	5.000	503.848	503.990
ID	26+07.090	5.000	503.619	503.780
IE	26+17.090	5.000	503.390	503.534
IF	26+27.090	5.000	503.161	503.287
IG	26+37.090	5.000	502.932	503.028
IH	26+47.090	5.000	502.703	502.753
C.L. PIER 21	26+58.160	5.000	502.449	502.449

DEFLECTIONS SHOWN FOR TRUSS SPANS 10 THROUGH 19 ARE THEORETICAL. PRIOR TO REMOVING THE CONCRETE DECK AND PARAPET FOR STAGE I CONSTRUCTION, THE CONTRACTOR SHALL CONFIRM THE DEFLECTIONS DUE TO WEIGHT OF THE CONCRETE DECK, CURB AND PARAPET BY TAKING ELEVATIONS ON THE TOP PLATE OF THE UPPER CHORD OF REPRESENTATIVE NORTH TRUSSES AT QUARTER POINTS BY REMOVING A 1' X 1' AREA OF THE EXISTING DECK OVER THE CHORDS. AFTER STAGE I CONCRETE HAS BEEN REMOVED ADDITIONAL ELEVATIONS SHALL BE RETAKEN AT THESE LOCATIONS. IF A DIFFERENCE IN EXCESS OF 3/16" OCCURS BETWEEN THE OBSERVED DEFLECTIONS AND THE DEAD LOAD DEFLECTIONS SHOWN IN THE DIAGRAM, THE TABULATED "THEORETICAL GRADE ELEVATIONS ADJUSTED FOR DEAD LOAD DEFLECTIONS" SHALL BE MODIFIED FOR BOTH SIDES OF THE DECK TO INCORPORATE THE OBSERVED DEFLECTION VALUES.

The deflections given in the diagram are not to be used if the Engineer is working from the Grade Elevations Adjusted for Dead Load Deflection as tabulated or modified in accordance with the preceding paragraph.

TOP OF ~~DECK ELEVATIONS~~

SPANS 18–21

CEDAR STREET BRIDGE

F.A. RTE. 669 SEC. 103B-I-4(D)

PEORIA–TAZEWELL COUNTIES

MTA, INCORPORATED

DESIGNED J.N. CHECKED G.B.M.

DRAWN K.T.B. DATE 12-11-87 NO. 85-12

ROUTE NO.	SECTION	COUNTY	TOTAL SHEETS	SHEET NO.
F.A. 669	⊗	PEORIA TAZEWELL	82	23
FED. ROAD DIST. NO. 7	ILLINOIS	PROJECT ~~BHF-669(---)~~		

⊗103B-1-4(D) SHEET 21 OF 70

ELEVATIONS-SPANS 18-21

STAGE CONST. JOINT

LOCATION	STATION	OFFSET	THEORETICAL GRADE ELEVATIONS	THEORETICAL GRADE ELEV'S ADJ. FOR D.L. DEFLECTION
C.L. PIER 17	21+31.250	1.500	518.793	518.793
GM	21+41.250	1.500	518.296	518.305
GN	21+51.250	1.500	517.799	517.817
GO	21+61.250	1.500	517.302	517.329
GP	21+71.250	1.500	516.805	516.841
GQ	21+81.250	1.500	516.308	516.348
GR	21+91.250	1.500	515.811	515.855
GS	22+01.250	1.500	515.314	515.362
GT	22+11.250	1.500	514.817	514.869
GU	22+21.250	1.500	514.320	514.369
GV	22+31.250	1.500	513.821	513.866
GW	22+41.250	1.500	513.345	513.386
GX	22+51.250	1.500	512.890	512.928
GY	22+61.250	1.500	512.457	512.487
GZ	22+71.250	1.500	512.047	512.067
HA	22+81.250	1.500	511.658	511.669
C.L. PIER 18	22+93.550	1.500	511.210	511.210
HB	23+03.550	1.500	510.870	510.879
HC	23+13.550	1.500	510.552	510.570
HD	23+23.550	1.500	510.256	510.283
HE	23+33.550	1.500	509.982	510.015
HF	23+43.550	1.500	509.730	509.771
HG	23+53.550	1.500	509.498	509.542
HH	23+63.550	1.500	509.269	509.317
HI	23+73.550	1.500	509.040	509.091
HJ	23+83.550	1.500	508.811	508.860
HK	23+93.550	1.500	508.582	508.627
HL	24+03.550	1.500	508.353	508.394
HM	24+13.550	1.500	508.124	508.162
HN	24+23.550	1.500	507.895	507.924
HO	24+33.550	1.500	507.666	507.686
HP	24+43.550	1.500	507.437	507.448
C.L. PIER 19	24+56.010	1.500	507.152	507.152
HQ	24+66.010	1.500	506.923	506.968
HR	24+76.010	1.500	506.694	506.785
HS	24+86.010	1.500	506.465	506.598
HT	24+96.010	1.500	506.236	506.373
HU	25+06.010	1.500	506.007	506.168
HV	25+16.010	1.500	505.778	505.922
HW	25+26.010	1.500	505.549	505.674
HX	25+36.010	1.500	505.320	505.416
HY	25+46.010	1.500	505.091	505.141
C.L. PIER 20	25+57.090	1.500	504.837	504.837
HZ	25+67.090	1.500	504.608	504.653
IA	25+77.090	1.500	504.379	504.470
IB	25+87.090	1.500	504.150	504.274
IC	25+97.090	1.500	503.921	504.063
ID	26+07.090	1.500	503.692	503.853
IE	26+17.090	1.500	503.463	503.607
IF	26+27.090	1.500	503.234	503.360
IG	26+37.090	1.500	503.005	503.101
IH	26+47.090	1.500	502.776	502.826
C.L. PIER 21	26+58.160	1.500	502.522	502.522

℄ RDWY. & STRINGER 4

LOCATION	STATION	OFFSET	THEORETICAL GRADE ELEVATIONS	THEORETICAL GRADE ELEV'S ADJ. FOR D.L. DEFLECTION
C.L. PIER 17	21+31.250	0.000	518.824	518.824
GM	21+41.250	0.000	518.327	518.336
GN	21+51.250	0.000	517.830	517.848
GO	21+61.250	0.000	517.333	517.360
GP	21+71.250	0.000	516.836	516.872
GQ	21+81.250	0.000	516.339	516.379
GR	21+91.250	0.000	515.842	515.886
GS	22+01.250	0.000	515.345	515.393
GT	22+11.250	0.000	514.848	514.900
GU	22+21.250	0.000	514.351	514.400
GV	22+31.250	0.000	513.852	513.897
GW	22+41.250	0.000	513.376	513.417
GX	22+51.250	0.000	512.921	512.959
GY	22+61.250	0.000	512.488	512.518
GZ	22+71.250	0.000	512.078	512.098
HA	22+81.250	0.000	511.689	511.700
C.L. PIER 18	22+93.550	0.000	511.241	511.241
HB	23+03.550	0.000	510.901	510.910
HC	23+13.550	0.000	510.583	510.601
HD	23+23.550	0.000	510.287	510.314
HE	23+33.550	0.000	510.013	510.050
HF	23+43.550	0.000	509.761	509.802
HG	23+53.550	0.000	509.529	509.573
HH	23+63.550	0.000	509.300	509.348
HI	23+73.550	0.000	509.071	509.122
HJ	23+83.550	0.000	508.842	508.891
HK	23+93.550	0.000	508.613	508.658
HL	24+03.550	0.000	508.384	508.425
HM	24+13.550	0.000	508.155	508.193
HN	24+23.550	0.000	507.926	507.955
HO	24+33.550	0.000	507.697	507.717
HP	24+43.550	0.000	507.468	507.479
C.L. PIER 19	24+56.010	0.000	507.183	507.183
HQ	24+66.010	0.000	506.954	506.999
HR	24+76.010	0.000	506.725	506.816
HS	24+86.010	0.000	506.496	506.619
HT	24+96.010	0.000	506.267	506.409
HU	25+06.010	0.000	506.038	506.199
HV	25+16.010	0.000	505.809	505.953
HW	25+26.010	0.000	505.580	505.705
HX	25+36.010	0.000	505.351	505.447
HY	25+46.010	0.000	505.122	505.172
C.L. PIER 20	25+57.090	0.000	504.868	504.868
HZ	25+67.090	0.000	504.639	504.684
IA	25+77.090	0.000	504.410	504.501
IB	25+87.090	0.000	504.181	504.305
IC	25+97.090	0.000	503.952	504.094
ID	26+07.090	0.000	503.723	503.884
IE	26+17.090	0.000	503.494	503.638
IF	26+27.090	0.000	503.265	503.391
IG	26+37.090	0.000	503.036	503.132
IH	26+47.090	0.000	502.807	502.857
C.L. PIER 21	26+58.160	0.000	502.553	502.553

TOP OF DECK ELEVATIONS
SPANS 18-21
CEDAR STREET BRIDGE
F.A. RTE. 669 SEC. 103B-1-4(D)
PEORIA-TAZEWELL COUNTIES

MTA, INCORPORATED

DESIGNED G.C. CHECKED J.N.
DRAWN F.D.J. DATE 12-11-87 NO.85-12

ROUTE NO	SECTION	COUNTY	TOTAL SHEETS	SHEET NO
F.A. 669	⊗	PEORIA TAZEWELL	82	24
FED ROAD DIST NO 7	ILLINOIS	PROJECT		

⊗ 103 B - I - 4 (D) SHEET 22 OF 70

ELEVATIONS – SPANS 22-27

NORTH AND SOUTH GUTTER

LOCATION	STATION	OFFSET	THEORETICAL GRADE ELEVATIONS	THEORETICAL GRADE ELEV'S ADJ. FOR D.L. DEFLECTION
C.L. PIER 21	26+58.160	24.580	502.041	502.041
II	26+68.160	24.580	501.812	501.858
IJ	26+78.160	24.580	501.583	501.674
IK	26+88.160	24.580	501.354	501.478
IL	26+98.160	24.580	501.125	501.268
IM	27+08.160	24.580	500.896	501.057
IN	27+18.160	24.580	500.667	500.812
IO	27+28.160	24.580	500.438	500.564
IP	27+38.160	24.580	500.209	500.305
IQ	27+48.160	24.580	499.980	500.031
C.L. PIER 22	27+59.240	24.580	499.727	499.727
IR	27+69.240	24.580	499.498	499.543
IS	27+79.240	24.580	499.269	499.360
IT	27+89.240	24.580	499.040	499.163
IU	27+99.240	24.580	498.811	498.953
IV	28+09.240	24.580	498.582	498.743
IW	28+19.240	24.580	498.353	498.497
IX	28+29.240	24.580	498.124	498.249
IY	28+39.240	24.580	497.895	497.991
IZ	28+49.240	24.580	497.666	497.716
C.L. PIER 23	28+60.320	24.580	497.412	497.412
JA	28+70.320	24.580	497.183	497.228
JB	28+80.320	24.580	496.954	497.045
JC	28+90.320	24.580	496.725	496.849
JD	29+00.320	24.580	496.496	496.638
JE	29+10.320	24.580	496.267	496.428
JF	29+20.320	24.580	496.038	496.182
JG	29+30.320	24.580	495.809	495.935
JH	29+40.320	24.580	495.580	495.676
JI	29+50.320	24.580	495.351	495.401
C.L. PIER 24	29+61.400	24.580	495.097	495.097
JJ	29+71.400	24.580	494.868	494.904
JK	29+81.400	24.580	494.639	494.711
JL	29+91.400	24.580	494.410	494.495
JM	30+01.400	24.580	494.181	494.279
JN	30+11.400	24.580	493.952	494.040
JO	30+21.400	24.580	493.723	493.798
JP	30+31.400	24.580	493.494	493.536
C.L. PIER 25	30+43.230	24.580	493.223	493.223
[redacted]	30+53.230	24.580	492.994	493.030
JR	30+63.230	24.580	492.765	492.837
JS	30+73.230	24.580	492.536	492.621
JT	30+83.230	24.580	492.307	492.405
JU	30+93.230	24.580	492.078	492.188
JV	31+03.230	24.580	491.849	491.924
JW	31+13.230	24.580	491.620	491.662
C.L. PIER 26	31+25.070	24.580	491.349	491.349
JX	31+35.070	24.580	491.120	491.156
JY	31+45.070	24.580	490.891	490.962
JZ	31+55.070	24.580	490.662	490.747
KA	31+65.070	24.580	490.433	490.531
KB	31+75.070	24.580	490.204	490.292
KC	31+85.070	24.580	489.975	490.050
KD	31+95.070	24.580	489.746	489.788
C.L. PIER 27	32+06.900	24.580	489.475	489.475

LONGIT. CONST. JOINT

LOCATION	STATION	OFFSET	THEORETICAL GRADE ELEVATIONS	THEORETICAL GRADE ELEV'S ADJ. FOR D.L. DEFLECTION
C.L. PIER 21	26+58.160	21.670	502.102	502.102
II	26+68.160	21.670	501.873	501.919
IJ	26+78.160	21.670	501.644	501.735
IK	26+88.160	21.670	501.415	501.539
IL	26+98.160	21.670	501.186	501.329
IM	27+08.160	21.670	500.957	501.118
IN	27+18.160	21.670	500.728	500.873
IO	27+28.160	21.670	500.499	500.625
IP	27+38.160	21.670	500.270	500.366
IQ	27+48.160	21.670	500.041	500.092
C.L. PIER 22	27+59.240	21.670	499.788	499.788
IR	27+69.240	21.670	499.559	499.604
IS	27+79.240	21.670	499.330	499.421
IT	27+89.240	21.670	499.101	499.224
IU	27+99.240	21.670	498.872	499.014
IV	28+09.240	21.670	498.643	498.804
IW	28+19.240	21.670	498.414	498.558
IX	28+29.240	21.670	498.185	498.310
IY	28+39.240	21.670	497.956	498.052
IZ	28+49.240	21.670	497.727	497.777
C.L. PIER 23	28+60.320	21.670	497.473	497.473
JA	28+70.320	21.670	497.244	497.289
JB	28+80.320	21.670	497.015	497.106
JC	28+90.320	21.670	496.786	496.910
JD	29+00.320	21.670	496.557	496.699
JE	29+10.320	21.670	496.328	496.489
JF	29+20.320	21.670	496.099	496.243
JG	29+30.320	21.670	495.870	495.996
JH	29+40.320	21.670	495.641	495.737
JI	29+50.320	21.670	495.412	495.462
C.L. PIER 24	29+61.400	21.670	495.158	495.158
JJ	29+71.400	21.670	494.929	494.965
JK	29+81.400	21.670	494.700	494.772
JL	29+91.400	21.670	494.471	494.556
JM	30+01.400	21.670	494.242	494.340
JN	30+11.400	21.670	494.013	494.101
JO	30+21.400	21.670	493.784	493.859
JP	30+31.400	21.670	493.555	493.597
C.L. PIER 25	30+43.230	21.670	493.284	493.284
JQ	30+53.230	21.670	[redacted]	493.091
JR	30+63.230	21.670	492.828	492.898
JS	30+73.230	21.670	492.597	492.682
JT	30+83.230	21.670	492.368	492.466
JU	30+93.230	21.670	492.139	492.227
JV	31+03.230	21.670	491.910	491.985
JW	31+13.230	21.670	491.681	491.723
C.L. PIER 26	31+25.070	21.670	491.410	491.410
JX	31+35.070	21.670	491.181	491.217
JY	31+45.070	21.670	490.952	491.023
JZ	31+55.070	21.670	490.723	490.808
KA	31+65.070	21.670	490.494	490.592
KB	31+75.070	21.670	490.265	490.373
KC	31+85.070	21.670	490.036	490.1[illegible]
KD	31+95.070	21.670	489.807	489.849
C.L. PIER 27	32+06.900	21.670	489.536	489.536

STRINGERS 1 AND 7

LOCATION	STATION	OFFSET	THEORETICAL GRADE ELEVATIONS	THEORETICAL GRADE ELEV'S ADJ. FOR D.L. DEFLECTION
C.L. PIER 21	26+58.160	20.000	502.136	502.136
II	26+68.160	20.000	501.907	501.953
IJ	26+78.160	20.000	501.678	501.769
IK	26+88.160	20.000	501.449	501.573
IL	26+98.160	20.000	501.220	501.363
IM	27+08.160	20.000	500.991	501.152
IN	27+18.160	20.000	500.762	500.907
IO	27+28.160	20.000	500.533	500.659
IP	27+38.160	20.000	500.304	500.400
IQ	27+48.160	20.000	500.075	500.126
C.L. PIER 22	27+59.240	20.000	499.822	499.822
IR	27+69.240	20.000	499.593	499.638
IS	27+79.240	20.000	499.364	499.455
IT	27+89.240	20.000	499.135	499.258
IU	27+99.240	20.000	498.906	499.048
IV	28+09.240	20.000	498.677	498.838
IW	28+19.240	20.000	498.448	498.592
IX	28+29.240	20.000	498.219	498.344
IY	28+39.240	20.000	497.990	498.086
IZ	28+49.240	20.000	497.761	497.811
C.L. PIER 23	28+60.320	20.000	497.507	497.507
JA	28+70.320	20.000	497.278	497.323
JB	28+80.320	20.000	497.049	497.140
JC	28+90.320	20.000	496.820	496.944
JD	29+00.320	20.000	496.591	496.733
JE	29+10.320	20.000	496.362	496.523
JF	29+20.320	20.000	496.133	496.277
JG	29+30.320	20.000	495.904	495.030
JH	29+40.320	20.000	495.675	495.771
JI	29+50.320	20.000	495.446	495.496
C.L. PIER 24	29+61.400	20.000	495.192	495.192
JJ	29+71.400	20.000	494.963	494.999
JK	29+81.400	20.000	494.734	494.806
JL	29+91.400	20.000	494.505	494.590
JM	30+01.400	20.000	494.276	494.374
JN	30+11.400	20.000	494.047	494.135
JO	30+21.400	20.000	493.818	493.893
JP	30+31.400	20.000	493.589	493.631
C.L. PIER 25	30+43.230	20.000	493.318	493.318
[redacted] JQ	30+53.230	20.000	[redacted]	493.125
JR	30+63.230	20.000	492.860	492.952
JS	30+73.230	20.000	492.631	492.716
JT	30+83.230	20.000	492.402	492.500
JU	30+93.230	20.000	492.173	492.261
JV	31+03.230	20.000	491.944	492.019
JW	31+13.230	20.000	491.715	491.757
C.L. PIER 26	31+25.070	20.000	491.444	491.444
JX	31+35.070	20.000	491.215	491.251
JY	31+45.070	20.000	490.986	491.057
JZ	31+55.070	20.000	490.757	490.842
KA	31+65.070	20.000	490.528	490.626
KB	31+75.070	20.000	490.299	490.387
KC	31+85.070	20.000	490.070	490.145
KD	31+95.070	20.000	489.841	489.883
C.L. PIER 27	32+06.900	20.000	489.570	489.570

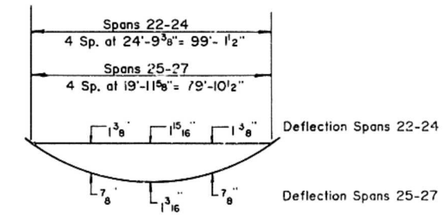

DEAD LOAD DEFLECTION DIAGRAM

(Includes Weight of Concrete Only)

The above deflections are not to be used in the field if the Engineer is working from the grade elevations adjusted for dead load deflections as shown.

Note: Individual stringer and concrete edge beam deflection between panel points equals 1/16" max., negligible.

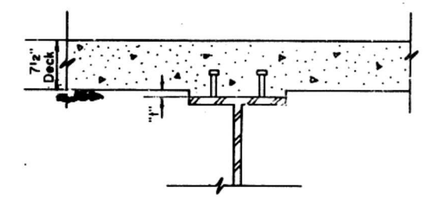

STANDARD FILLET DETAIL

To determine "t" after the existing concrete deck has been removed, elevations of the top flanges of the existing stringers, girders or trusses shall be taken at intervals shown on the elevation sheets. These elevations subtracted from the "Theoretical Grade Elevations Adjusted for Dead Load Deflection" minus deck thickness equals the fillet height "t" above top flange of beams.

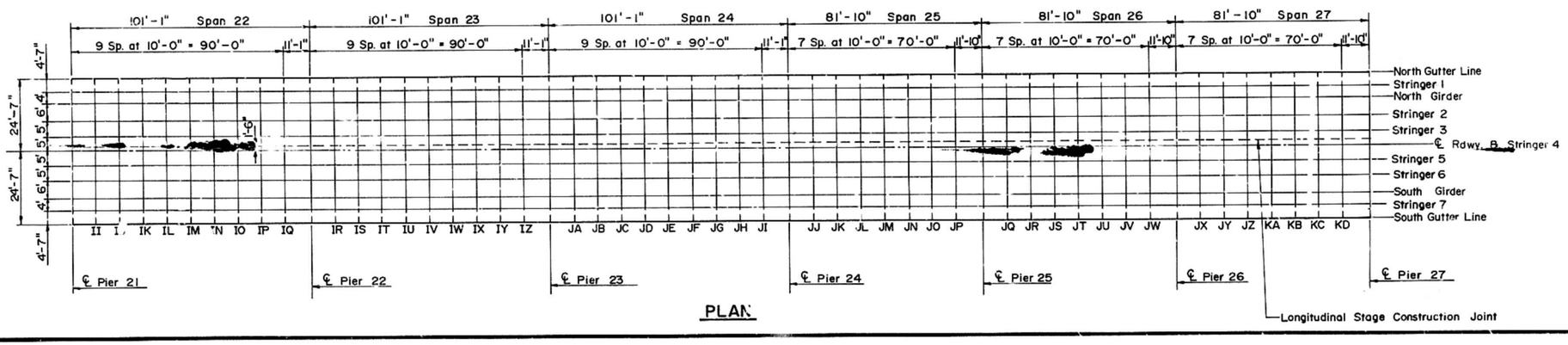

PLAN

TOP OF DECK ELEVATIONS
SPANS 22-27
CEDAR STREET BRIDGE
F.A. RTE. 669 SEC. 103B-I-4(D)
PEORIA-TAZEWELL COUNTIES

MTA, INCORPORATED

DESIGNED J.N. CHECKED G.B.M.
DRAWN K.T.B. DATE 12-11-87 NO. 85-12

ROUTE NO	SECTION	COUNTY	TOTAL SHEETS	SHEET NO
FA 669	(8)	PEORIA TAZEWELL	82	25
FED ROAD DIST NO 7	ILLINOIS	PROJECT	RHF-669(-1)	

(8) 103B-I-4(D) SHEET 23 OF 70

ELEVATIONS – SPANS 22-27

NORTH AND SOUTH GIRDERS

LOCATION	STATION	OFFSET	THEORETICAL GRADE ELEVATIONS	THEORETICAL GRADE ELEV'S ADJ. FOR D.L. DEFLECTION
C.L. PIER 21	26+58.160	16.000	502.220	502.220
II	26+68.160	16.000	501.991	502.037
IJ	26+78.160	16.000	501.762	501.853
IK	26+88.160	16.000	501.533	501.657
IL	26+98.160	16.000	501.304	501.447
IM	27+08.160	16.000	501.075	501.236
IN	27+18.160	16.000	500.846	500.991
IO	27+28.160	16.000	500.617	500.743
IP	27+38.160	16.000	500.388	500.484
IQ	27+48.160	16.000	500.159	500.210
C.L. PIER 22	27+59.240	16.000	499.906	499.906
IR	27+69.240	16.000	499.677	499.722
IS	27+79.240	16.000	499.448	499.539
IT	27+89.240	16.000	499.219	499.342
IU	27+99.240	16.000	498.990	499.132
IV	28+09.240	16.000	498.761	498.922
IW	28+19.240	16.000	498.532	498.676
IX	28+29.240	16.000	498.303	498.428
IY	28+39.240	16.000	498.074	498.170
IZ	28+49.240	16.000	497.845	497.895
C.L. PIER 23	28+60.320	16.000	497.591	497.591
JA	28+70.320	16.000	497.362	497.407
JB	28+80.320	16.000	497.133	497.224
JC	28+90.320	16.000	496.904	497.028
JD	29+00.320	16.000	496.675	496.817
JE	29+10.320	16.000	496.446	496.607
JF	29+20.320	16.000	496.217	496.361
JG	29+30.320	16.000	495.988	496.114
JH	29+40.320	16.000	495.759	495.855
JI	29+50.320	16.000	495.530	495.580
C.L. PIER 24	29+61.400	16.000	495.276	495.276
JJ	29+71.400	16.000	495.047	495.083
JK	29+81.400	16.000	494.818	494.890
JL	29+91.400	16.000	494.589	494.674
JM	30+01.400	16.000	494.360	494.458
JN	30+11.400	16.000	494.131	494.219
JO	30+21.400	16.000	493.902	493.977
JP	30+31.400	16.000	493.673	493.715
C.L. PIER 25	30+43.230	16.000	493.402	493.402
JQ	30+53.230	16.000	493.173	493.209
JR	30+63.230	16.000	492.944	493.016
JS	30+73.230	16.000	492.715	492.800
JT	30+83.230	16.000	492.486	492.584
JU	30+93.230	16.000	492.257	492.345
JV	31+03.230	16.000	492.028	492.103
JW	31+13.230	16.000	491.799	491.841
C.L. PIER 26	31+25.070	16.000	491.528	491.528
JX	31+35.070	16.000	491.299	491.335
JY	31+45.070	16.000	491.070	491.141
JZ	31+55.070	16.000	490.841	490.926
KA	31+65.070	16.000	490.612	490.710
KB	31+75.070	16.000	490.383	490.471
KC	31+85.070	16.000	490.154	490.229
KD	31+95.070	16.000	489.925	489.967
C.L. PIER 27	32+06.900	16.000	489.654	489.654

STRINGERS 2 AND 6

LOCATION	STATION	OFFSET	THEORETICAL GRADE ELEVATIONS	THEORETICAL GRADE ELEV'S ADJ. FOR D.L. DEFLECTION
C.L. PIER 21	26+58.160	10.000	502.345	502.345
II	26+68.160	10.000	502.116	502.162
IJ	26+78.160	10.000	501.887	501.978
IK	26+88.160	10.000	501.658	501.782
IL	26+98.160	10.000	501.429	501.572
IM	27+08.160	10.000	501.200	501.361
IN	27+18.160	10.000	500.971	501.116
IO	27+28.160	10.000	500.742	500.868
IP	27+38.160	10.000	500.513	500.609
IQ	27+48.160	10.000	500.284	500.335
C.L. PIER 22	27+59.240	10.000	500.031	500.031
IR	27+69.240	10.000	499.802	499.847
IS	27+79.240	10.000	499.573	499.664
IT	27+89.240	10.000	499.344	499.467
IU	27+99.240	10.000	499.115	499.257
IV	28+09.240	10.000	498.886	499.047
IW	28+19.240	10.000	498.657	498.801
IX	28+29.240	10.000	498.428	498.553
IY	28+39.240	10.000	498.199	498.295
IZ	28+49.240	10.000	497.970	498.020
C.L. PIER 23	28+60.320	10.000	497.716	497.716
JA	28+70.320	10.000	497.487	497.532
JB	28+80.320	10.000	497.258	497.349
JC	28+90.320	10.000	497.029	497.153
JD	29+00.320	10.000	496.800	496.942
JE	29+10.320	10.000	496.571	496.732
JF	29+20.320	10.000	496.342	496.486
JG	29+30.320	10.000	496.113	496.239
JH	29+40.320	10.000	495.884	495.980
JI	29+50.320	10.000	495.655	495.705
C.L. PIER 24	29+61.400	10.000	495.401	495.401
JJ	29+71.400	10.000	495.172	495.208
JK	29+81.400	10.000	494.943	495.015
JL	29+91.400	10.000	494.714	494.799
JM	30+01.400	10.000	494.485	494.583
JN	30+11.400	10.000	494.256	494.344
JO	30+21.400	10.000	494.027	494.102
JP	30+31.400	10.000	493.798	493.840
C.L. PIER 25	30+43.230	10.000	493.527	493.527
JQ	30+53.230	10.000	493.298	493.334
JR	30+63.230	10.000	493.069	493.141
JS	30+73.230	10.000	492.840	492.925
JT	30+83.230	10.000	492.611	492.709
JU	30+93.230	10.000	492.382	492.470
JV	31+03.230	10.000	492.153	492.228
JW	31+13.230	10.000	491.924	491.966
C.L. PIER 26	31+25.070	10.000	491.653	491.653
JX	31+35.070	10.000	491.424	491.460
JY	31+45.070	10.000	491.195	491.266
JZ	31+55.070	10.000	490.966	491.051
KA	31+65.070	10.000	490.737	490.835
KB	31+75.070	10.000	490.508	490.596
KC	31+85.070	10.000	490.279	490.354
KD	31+95.070	10.000	490.050	490.092
C.L. PIER 27	32+06.900	10.000	489.779	489.779

STRINGERS 3 AND 5

LOCATION	STATION	OFFSET	THEORETICAL GRADE ELEVATIONS	THEORETICAL GRADE ELEV'S ADJ. FOR D.L. DEFLECTION
C.L. PIER 21	26+58.160	5.000	502.449	502.449
II	26+68.160	5.000	502.220	502.266
IJ	26+78.160	5.000	501.991	502.082
IK	26+88.160	5.000	501.762	501.886
IL	26+98.160	5.000	501.533	501.676
IM	27+08.160	5.000	501.304	501.465
IN	27+18.160	5.000	501.075	501.220
IO	27+28.160	5.000	500.846	500.972
IP	27+38.160	5.000	500.617	500.713
IQ	27+48.160	5.000	500.388	500.439
C.L. PIER 22	27+59.240	5.000	500.135	500.135
IR	27+69.240	5.000	499.906	499.951
IS	27+79.240	5.000	499.677	499.768
IT	27+89.240	5.000	499.448	499.571
IU	27+99.240	5.000	499.219	499.361
IV	28+09.240	5.000	498.990	499.151
IW	28+19.240	5.000	498.761	498.905
IX	28+29.240	5.000	498.532	498.657
IY	28+39.240	5.000	498.303	498.399
IZ	28+49.240	5.000	498.074	498.124
C.L. PIER 23	28+60.320	5.000	497.820	497.820
JA	28+70.320	5.000	497.591	497.636
JB	28+80.320	5.000	497.362	497.453
JC	28+90.320	5.000	497.133	497.257
JD	29+00.320	5.000	496.904	497.046
JE	29+10.320	5.000	496.675	496.836
JF	29+20.320	5.000	496.446	496.590
JG	29+30.320	5.000	496.217	496.343
JH	29+40.320	5.000	495.988	496.084
JI	29+50.320	5.000	495.759	495.809
C.L. PIER 24	29+61.400	5.000	495.505	495.505
JJ	29+71.400	5.000	495.276	495.312
JK	29+81.400	5.000	495.047	495.119
JL	29+91.400	5.000	494.818	494.903
JM	30+01.400	5.000	494.589	494.687
JN	30+11.400	5.000	494.360	494.448
JO	30+21.400	5.000	494.131	494.206
JP	30+31.400	5.000	493.902	493.944
C.L. PIER 25	30+43.230	5.000	493.631	493.631
JQ	30+53.230	5.000	493.402	493.438
JR	30+63.230	5.000	493.173	493.245
JS	30+73.230	5.000	492.944	493.029
JT	30+83.230	5.000	492.715	492.813
JU	30+93.230	5.000	492.486	492.574
JV	31+03.230	5.000	492.257	492.332
JW	31+13.230	5.000	492.028	492.070
C.L. PIER 26	31+25.070	5.000	491.757	491.757
JX	31+35.070	5.000	491.528	491.564
JY	31+45.070	5.000	491.299	491.370
JZ	31+55.070	5.000	491.070	491.155
KA	31+65.070	5.000	490.841	490.939
KB	31+75.070	5.000	490.612	490.700
KC	31+85.070	5.000	490.383	490.458
KD	31+95.070	5.000	490.154	490.196
C.L. PIER 27	32+06.900	5.000	489.883	489.883

TOP OF DECK ELEVATIONS
SPANS 22-27
CEDAR STREET BRIDGE
F.A. RTE. 669 SEC. 103B-I-4(D)
PEORIA-TAZEWELL COUNTIES

MTA, INCORPORATED

DESIGNED J.N. CHECKED G.B.M.
DRAWN K.T.B. DATE 12-11-87 NO. 85-12

ROUTE NO.	SECTION	COUNTY	TOTAL SHEETS	SHEET NO.
F.A. 669	⊗	PEORIA TAZEWELL	82	26
FED. ROAD DIST. NO. 7		ILLINOIS	PROJECT ~~BHF-669(-)~~	

⊗103B-1-4(D) SHEET 24 OF 70

ELEVATIONS-SPANS 22-27

STAGE CONST. JOINT

LOCATION	STATION	OFFSET	THEORETICAL GRADE ELEVATIONS	THEORETICAL GRADE ELEV'S ADJ. FOR D.L. DEFLECTION
C.L. PIER 21	26+58.160	1.500	502.522	502.522
II	26+68.160	1.500	502.293	502.339
IJ	26+78.160	1.500	502.064	502.155
IK	26+88.160	1.500	501.835	501.959
IL	26+98.160	1.500	501.606	501.749
IM	27+08.160	1.500	501.377	501.538
IN	27+18.160	1.500	501.148	501.293
IO	27+28.160	1.500	500.919	501.045
IP	27+38.160	1.500	500.690	500.786
IQ	27+48.160	1.500	500.461	500.512
C.L. PIER 22	27+59.240	1.500	500.208	500.208
IR	27+69.240	1.500	499.979	500.024
IS	27+79.240	1.500	499.750	499.841
IT	27+89.240	1.500	499.521	499.644
IU	27+99.240	1.500	499.292	499.434
IV	28+09.240	1.500	499.063	499.224
IW	28+19.240	1.500	498.834	498.978
IX	28+29.240	1.500	498.605	498.730
IY	28+39.240	1.500	498.376	498.472
IZ	28+49.240	1.500	498.147	498.197
C.L. PIER 23	28+60.320	1.500	497.893	497.893
JA	28+70.320	1.500	497.664	497.709
JB	28+80.320	1.500	497.435	497.526
JC	28+90.320	1.500	497.206	497.330
JD	29+00.320	1.500	496.977	497.119
JE	29+10.320	1.500	496.748	496.909
JF	29+20.320	1.500	496.519	496.663
JG	29+30.320	1.500	496.290	496.416
JH	29+40.320	1.500	496.061	496.157
JI	29+50.320	1.500	495.832	495.882
C.L. PIER 24	29+61.400	1.500	495.578	495.578
JJ	29+71.400	1.500	495.349	495.385
JK	29+81.400	1.500	495.120	495.192
JL	29+91.400	1.500	494.891	494.976
JM	30+01.400	1.500	494.662	494.760
JN	30+11.400	1.500	494.433	494.521
JO	30+21.400	1.500	494.204	494.279
JP	30+31.400	1.500	493.975	494.017
C.L. PIER 25	30+43.230	1.500	493.704	493.704
JQ	30+53.230	1.500	493.475	493.511
JR	30+63.230	1.500	493.246	493.318
JS	30+73.230	1.500	493.017	493.102
JT	30+83.230	1.500	492.788	492.886
JU	30+93.230	1.500	492.559	492.647
JV	31+03.230	1.500	492.330	492.405
JW	31+13.230	1.500	492.101	492.143
C.L. PIER 26	31+25.070	1.500	491.830	491.830
JX	31+35.070	1.500	491.601	491.637
JY	31+45.070	1.500	491.372	491.443
JZ	31+55.070	1.500	491.143	491.228
KA	31+65.070	1.500	490.914	491.012
KB	31+75.070	1.500	490.685	490.773
KC	31+85.070	1.500	490.456	490.531
KD	31+95.070	1.500	490.227	490.269
C.L. PIER 27	32+06.900	1.500	489.956	489.956

℄ RDWY. & STRINGER 4

LOCATION	STATION	OFFSET	THEORETICAL GRADE ELEVATIONS	THEORETICAL GRADE ELEV'S ADJ. FOR D.L. DEFLECTION
C.L. PIER 21	26+58.160	0.000	502.553	502.553
II	26+68.160	0.000	502.324	502.370
IJ	26+78.160	0.000	502.095	502.186
IK	26+88.160	0.000	501.866	501.990
IL	26+98.160	0.000	501.637	501.780
IM	27+08.160	0.000	501.408	501.569
IN	27+18.160	0.000	501.179	501.324
IO	27+28.160	0.000	500.950	501.076
IP	27+38.160	0.000	500.721	500.817
IQ	27+48.160	0.000	500.492	500.543
C.L. PIER 22	27+59.240	0.000	500.239	500.239
IR	27+69.240	0.000	500.010	500.055
IS	27+79.240	0.000	499.781	499.872
IT	27+89.240	0.000	499.552	499.675
IU	27+99.240	0.000	499.323	499.465
IV	28+09.240	0.000	499.094	499.255
IW	28+19.240	0.000	498.865	499.009
IX	28+29.240	0.000	498.636	498.761
IY	28+39.240	0.000	498.407	498.503
IZ	28+49.240	0.000	498.178	498.228
C.L. PIER 23	28+60.320	0.000	497.924	497.924
JA	28+70.320	0.000	497.695	497.740
JB	28+80.320	0.000	497.466	497.557
JC	28+90.320	0.000	497.237	497.361
JD	29+00.320	0.000	497.008	497.150
JE	29+10.320	0.000	496.779	496.940
JF	29+20.320	0.000	496.550	496.694
JG	29+30.320	0.000	496.321	496.447
JH	29+40.320	0.000	496.092	496.188
JI	29+50.320	0.000	495.863	495.913
C.L. PIER 24	29+61.400	0.000	495.609	495.609
JJ	29+71.400	0.000	495.380	495.416
JK	29+81.400	0.000	495.151	495.223
JL	29+91.400	0.000	494.922	495.007
JM	30+01.400	0.000	494.693	494.791
JN	30+11.400	0.000	494.464	494.552
JO	30+21.400	0.000	494.235	494.310
JP	30+31.400	0.000	494.006	494.048
C.L. PIER 25	30+43.230	0.000	493.735	493.735
JQ	30+53.230	0.000	493.506	493.542
JR	30+63.230	0.000	493.277	493.349
JS	30+73.230	0.000	493.048	493.133
JT	30+83.230	0.000	492.819	492.917
JU	30+93.230	0.000	492.590	492.678
JV	31+03.230	0.000	492.361	492.436
JW	31+13.230	0.000	492.132	492.174
C.L. PIER 26	31+25.070	0.000	491.861	491.861
JX	31+35.070	0.000	491.632	491.668
JY	31+45.070	0.000	491.403	491.474
JZ	31+55.070	0.000	491.174	491.259
KA	31+65.070	0.000	490.945	491.043
KB	31+75.070	0.000	490.716	490.804
KC	31+85.070	0.000	490.487	490.562
KD	31+95.070	0.000	490.258	490.300
C.L. PIER 27	32+06.900	0.000	489.987	489.987

TOP OF DECK ELEVATIONS
SPANS 22-27
CEDAR STREET BRIDGE
F.A. RTE. 669 SEC. 103B-1-4(D)
PEORIA-TAZEWELL COUNTIES

MTA, INCORPORATED

DESIGNED J.N. CHECKED G.B.M.
DRAWN K.T.B. DATE 12-11-87 NO. 85-12

ROUTE NO	SECTION	COUNTY	TOTAL SHEETS	SHEET NO
F.A. 669	⊗	PEORIA TAZEWELL	82	27
FED ROAD DIST NO 7	ILLINOIS	PROJECT	[redacted]	

⊗ 103 B-I-4(D) SHEET 25 OF 70

ELEVATIONS – SPANS 28-34

NORTH AND SOUTH GUTTER

LOCATION	STATION	OFFSET	THEORETICAL GRADE ELEVATIONS	THEORETICAL GRADE ELEV'S ADJ. FOR D.L. DEFLECTION
C.L. PIER 27	32+06.900	24.580	489.475	489.475
KE	32+16.900	24.580	489.246	489.282
KF	32+26.900	24.580	489.017	489.089
KG	32+36.900	24.580	488.788	488.873
KH	32+46.900	24.580	488.559	488.657
KI	32+56.900	24.580	488.330	488.418
KJ	32+66.900	24.580	488.101	488.176
KK	32+76.900	24.580	487.872	487.914
C.L. PIER 28	32+88.740	24.580	487.601	487.601
KL	32+98.740	24.580	487.372	487.389
KM	33+08.740	24.580	487.143	487.172
KN	33+18.740	24.580	486.914	486.951
KO	33+28.740	24.580	486.685	486.715
KP	33+38.740	24.580	486.456	486.475
C.L. PIER 29	33+49.820	24.580	486.202	486.202
KQ	33+59.820	24.580	485.973	486.009
KR	33+69.820	24.580	485.744	485.816
KS	33+79.820	24.580	485.515	485.600
KT	33+89.820	24.580	485.286	485.384
KU	33+99.820	24.580	485.055	485.142
KV	34+09.820	24.580	484.812	484.857
KW	34+19.820	24.580	484.555	484.598
C.L. PIER 30	34+31.660	24.580	484.232	484.232
KX	34+41.660	24.580	483.944	483.980
KY	34+51.660	24.580	483.641	483.713
KZ	34+61.660	24.580	483.324	483.409
LA	34+71.660	24.580	482.993	483.091
LB	34+81.660	24.580	482.647	482.734
LC	34+91.660	24.580	482.287	482.361
LD	35+01.660	24.580	481.912	481.954
C.L. PIER 31	35+13.470	24.580	481.451	481.451
LE	35+23.470	24.580	481.045	481.081
LF	35+33.470	24.580	480.625	480.696
LG	35+43.470	24.580	480.190	480.275
LH	35+53.470	24.580	479.741	479.839
LI	35+63.470	24.580	479.277	479.365
LJ	35+73.470	24.580	478.800	478.874
LK	35+83.470	24.580	478.312	478.354
C [redacted]	35+95.240	24.580	477.738	477.738
[redacted]	36+05.240	24.580	477.250	477.260
LM	36+15.240	24.580	476.763	476.834
LN	36+25.240	24.580	476.275	476.360
LO	36+35.240	24.580	475.787	475.885
LP	36+45.240	24.580	475.300	475.387
LQ	36+55.240	24.580	474.812	474.887
LR	36+65.240	24.580	474.324	474.366
C.L. PIER 33	36+76.990	24.580	473.751	473.751
LS	36+86.990	24.580	473.264	473.300
LT	36+96.990	24.580	472.776	472.848
LU	37+06.990	24.580	472.288	472.374
LV	37+16.990	24.580	471.800	471.899
LW	37+26.990	24.580	471.313	471.399
LX	37+36.990	24.580	470.825	470.899
LY	37+46.990	24.580	470.337	470.376
C.L. BRG. E. ABUT.	37+57.750	24.580	469.813	469.813
BACK EAST ABUT.	37+60.080	24.580	469.699	469.699

LONGIT. CONST. JOINT

LOCATION	STATION	OFFSET	THEORETICAL GRADE ELEVATIONS	THEORETICAL GRADE ELEV'S ADJ. FOR D.L. DEFLECTION
C.L. PIER 27	32+05.900	21.670	489.536	489.536
KE	32+16.900	21.670	489.307	489.343
KF	32+26.900	21.670	489.078	489.150
KG	32+36.900	21.670	488.849	488.934
KH	32+46.900	21.670	488.620	488.718
KI	32+56.900	21.670	488.391	488.479
KJ	32+66.900	21.670	488.162	488.237
KK	32+76.900	21.670	487.933	487.975
C.L. PIER 28	32+88.740	21.670	487.662	487.662
KL	32+98.740	21.670	487.433	487.450
KM	33+08.740	21.670	487.204	487.233
KN	33+18.740	21.670	486.975	487.012
KO	33+28.740	21.670	486.746	486.776
KP	33+38.740	21.670	486.517	486.536
C.L. PIER 29	33+49.820	21.670	486.263	486.263
KQ	33+59.820	21.670	486.034	486.070
KR	33+69.820	21.670	485.805	485.877
KS	33+79.820	21.670	485.576	485.661
KT	33+89.820	21.670	485.347	485.445
KU	33+99.820	21.670	485.116	485.203
KV	34+09.820	21.670	484.873	484.948
KW	34+19.820	21.670	484.616	484.659
C.L. PIER 30	34+31.660	21.670	484.293	484.293
KX	34+41.660	21.670	484.005	484.041
KY	34+51.660	21.670	483.702	483.774
KZ	34+61.660	21.670	483.385	483.470
LA	34+71.660	21.670	483.054	483.152
LB	34+81.660	21.670	482.708	482.795
LC	34+91.660	21.670	482.348	482.422
LD	35+01.660	21.670	481.973	482.015
C.L. PIER 31	35+13.470	21.670	481.512	481.512
LE	35+23.470	21.670	481.106	481.142
LF	35+33.470	21.670	480.686	480.757
LG	35+43.470	21.670	480.251	480.336
LH	35+53.470	21.670	479.802	479.900
LI	35+63.470	21.670	479.338	479.426
LJ	35+73.470	21.670	478.861	478.935
LK	35+83.470	21.670	478.373	478.415
C.L. PIER 32	35+95.240	21.670	477.799	477.799
LL	36+05.240	21.670	477.311	477.347
LM	36+15.240	21.670	476.824	476.895
LN	36+25.240	21.670	476.336	476.421
LO	36+35.240	21.670	475.848	475.946
LP	36+45.240	21.670	475.361	475.448
LQ	36+55.240	21.670	474.873	474.948
LR	36+65.240	21.670	474.385	474.427
C.L. PIER 33	36+76.990	21.670	473.812	473.812
LS	36+86.990	21.670	473.325	473.361
LT	36+96.990	21.670	472.837	472.909
LU	37+06.990	21.670	472.349	472.435
LV	37+16.990	21.670	471.861	471.960
LW	37+26.990	21.670	471.374	471.460
LX	37+36.990	21.670	470.886	470.968
LY	37+46.990	21.670	470.398	470.437
C.L. BRG. E. ABUT.	37+57.750	21.670	469.874	469.874
BACK EAST ABUT.	37+60.080	21.670	469.760	469.760

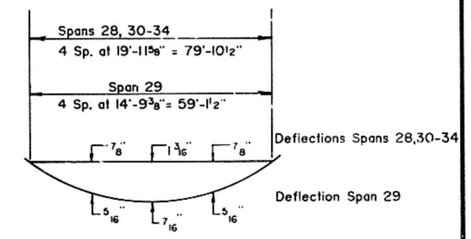

DEAD LOAD DEFLECTION DIAGRAM

(Includes Weight of Concrete Only)

The above deflections are not to be used in the field if the Engineer is working from the grade elevations adjusted for dead load deflections as shown.

NOTE : Individual stringer and concrete edge beam deflection between panel points equals 1/16" max., negligible.

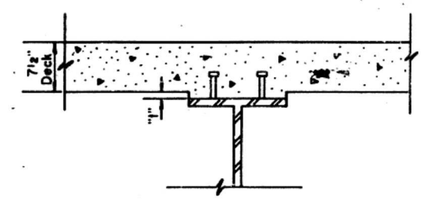

STANDARD FILLET DETAIL

To determine "I" after the existing concrete deck has been removed, elevations of the top flanges of the existing stringers, girders or trusses shall be taken at intervals shown on the elevation sheets. These elevations subtracted from the "Theoretical Grade Elevations Adjusted for Dead Load Deflection" minus deck thickness equals the fillet height "I" above top flange of beams.

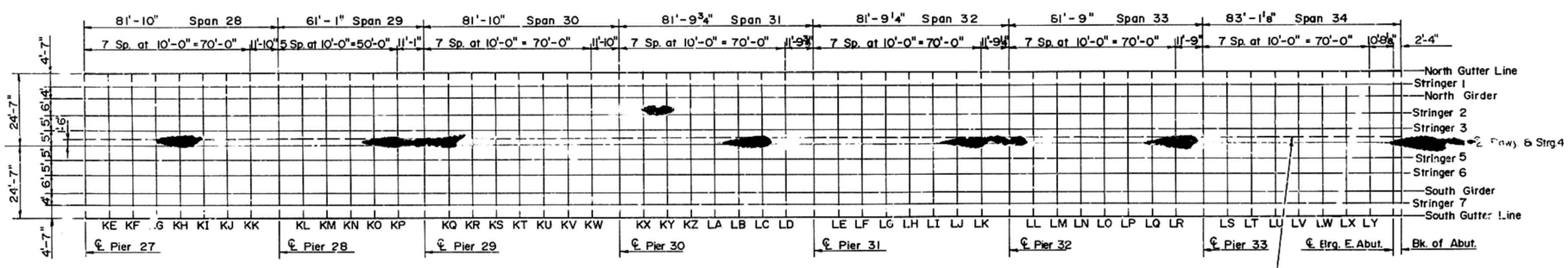

PLAN

TOP OF DECK ELEVATIONS
SPANS 28-34
CEDAR STREET BRIDGE
F.A. RTE. 669 SEC. 103B-I-4(D)
PEORIA-TAZEWELL COUNTIES

MTA, INCORPORATED

DESIGNED J.N. CHECKED G.B.M.
DRAWN K.T.B. DATE 12-11-87 NO. 85-12

ROUTE NO.	SECTION	COUNTY	TOTAL SHEETS	SHEET NO.
F.A. 669	⊛	PEORIA TAZEWELL	82	28
FED. ROAD DIST. NO. 7		ILLINOIS	PROJECT ~~BHF-669~~	

⊛ 103B-I-4(D) SHEET 26 OF 70

ELEVATIONS - SPANS 28-34

STRINGERS 1 & 7

LOCATION	STATION	OFFSET	THEORETICAL GRADE ELEVATIONS	THEORETICAL GRADE ELEV'S ADJ. FOR D.L. DEFLECTION
C.L. PIER 27	32+06.900	20.000	489.570	489.570
KE	32+16.900	20.000	489.341	489.377
KF	32+26.900	20.000	489.112	489.184
KG	32+36.900	20.000	488.883	488.968
KH	32+46.900	20.000	488.654	488.752
KI	32+56.900	20.000	488.425	488.513
KJ	32+66.900	20.000	488.196	488.271
KK	32+76.900	20.000	487.967	488.009
C.L. PIER 28	32+88.740	20.000	487.696	487.696
KL	32+98.740	20.000	487.467	487.484
KM	33+08.740	20.000	487.238	487.267
KN	33+18.740	20.000	487.009	487.046
KO	33+28.740	20.000	486.780	486.810
KP	33+38.740	20.000	486.551	486.570
C.L. PIER 29	33+49.820	20.000	486.297	486.297
KQ	33+59.820	20.000	486.068	486.104
KR	33+69.820	20.000	485.839	485.911
KS	33+79.820	20.000	485.610	485.695
KT	33+89.820	20.000	485.381	485.479
KU	33+99.820	20.000	485.150	485.237
KV	34+09.820	20.000	484.907	484.982
KW	34+19.820	20.000	484.650	484.693
C.L. PIER 30	34+31.660	20.000	484.327	484.327
KX	34+41.660	20.000	484.039	484.075
KY	34+51.660	20.000	483.736	483.808
KZ	34+61.660	20.000	483.419	483.504
LA	34+71.660	20.000	483.088	483.186
LB	34+81.660	20.000	482.742	482.829
LC	34+91.660	20.000	482.382	482.456
LD	35+01.660	20.000	482.007	482.049
C.L. PIER 31	35+13.470	20.000	481.546	481.546
LE	35+23.470	20.000	481.140	481.176
LF	35+33.470	20.000	480.720	480.791
LG	35+43.470	20.000	480.285	480.370
LH	35+53.470	20.000	479.836	479.934
LI	35+63.470	20.000	479.372	479.460
LJ	35+73.470	20.000	478.895	478.969
LK	35+83.470	20.000	478.407	478.449
C.L. PIER 32	35+95.240	20.000	477.833	477.833
LL	36+05.240	20.000	477.345	477.381
LM	36+15.240	20.000	476.858	476.929
LN	36+25.240	20.000	476.370	476.455
LO	36+35.240	20.000	475.882	475.980
LP	36+45.240	20.000	475.395	475.482
LQ	36+55.240	20.000	474.907	474.982
LR	36+65.240	20.000	474.419	474.461
C.L. PIER 33	36+76.990	20.000	473.846	473.846
LS	36+86.990	20.000	473.359	473.395
LT	36+96.990	20.000	472.871	472.943
LU	37+06.990	20.000	472.383	472.469
LV	37+16.990	20.000	471.895	471.994
LW	37+26.990	20.000	471.408	471.494
LX	37+36.990	20.000	470.920	470.994
LY	37+46.990	20.000	470.432	470.471
C.L. BRG. E. ABUT.	37+57.750	20.000	469.908	469.908
BACK EAST ABUT.	37+60.080	20.000	469.794	469.794

NORTH AND SOUTH GIRDERS

LOCATION	STATION	OFFSET	THEORETICAL GRADE ELEVATIONS	THEORETICAL GRADE ELEV'S ADJ. FOR D.L. DEFLECTION
C.L. PIER 27	32+06.900	16.000	489.654	489.654
KE	32+16.900	16.000	489.425	489.461
KF	32+26.900	16.000	489.196	489.268
KG	32+36.900	16.000	488.967	489.052
KH	32+46.900	16.000	488.738	488.836
KI	32+56.900	16.000	488.509	488.597
KJ	32+66.900	16.000	488.280	488.355
KK	32+76.900	16.000	488.051	488.093
C.L. PIER 28	32+88.740	16.000	487.780	487.780
KL	32+98.740	16.000	487.551	487.568
KM	33+08.740	16.000	487.322	487.351
KN	33+18.740	16.000	487.093	487.130
KO	33+28.740	16.000	486.864	486.894
KP	33+38.740	16.000	486.635	486.654
C.L. PIER 29	33+49.820	16.000	486.381	486.381
KQ	33+59.820	16.000	486.152	486.188
KR	33+69.820	16.000	485.923	485.995
KS	33+79.820	16.000	485.694	485.779
KT	33+89.820	16.000	485.465	485.563
KU	33+99.820	16.000	485.234	485.321
KV	34+09.820	16.000	484.991	485.066
KW	34+19.820	16.000	484.734	484.777
C.L. PIER 30	34+31.660	16.000	484.411	484.411
KX	34+41.660	16.000	484.123	484.159
KY	34+51.660	16.000	483.820	483.892
KZ	34+61.660	16.000	483.503	483.588
LA	34+71.660	16.000	483.172	483.270
LB	34+81.660	16.000	482.826	482.913
LC	34+91.660	16.000	482.466	482.540
LD	35+01.660	16.000	482.091	482.133
C.L. PIER 31	35+13.470	16.000	481.630	481.630
LE	35+23.470	16.000	481.224	481.260
LF	35+33.470	16.000	480.804	480.875
LG	35+43.470	16.000	480.369	480.454
LH	35+53.470	16.000	479.920	480.018
LI	35+63.470	16.000	479.456	479.544
LJ	35+73.470	16.000	478.979	479.053
LK	35+83.470	16.000	478.491	478.533
C.L. PIER 32	35+95.240	16.000	477.917	477.917
LL	36+05.240	16.000	477.429	477.465
LM	36+15.240	16.000	476.942	477.013
LN	36+25.240	16.000	476.454	476.539
LO	36+35.240	16.000	475.966	476.064
LP	36+45.240	16.000	475.479	475.566
LQ	36+55.240	16.000	474.991	475.066
LR	36+65.240	16.000	474.503	474.545
C.L. PIER 33	36+76.990	16.000	473.930	473.930
LS	36+86.990	16.000	473.443	473.479
LT	36+96.990	16.000	472.955	473.027
LU	37+06.990	16.000	472.467	472.553
LV	37+16.990	16.000	471.979	472.078
LW	37+26.990	16.000	471.492	471.578
LX	37+36.990	16.000	471.004	471.078
LY	37+46.990	16.000	4[illegible]16	470.555
C.L. BRG. E. ABUT.	37+57.750	16.000	469.992	469.992
BACK EAST ABUT.	37+60.080	16.000	469.878	469.878

TOP OF DECK ELEVATIONS
SPANS 28-34
CEDAR STREET BRIDGE
F.A. RTE. 669 SEC. 103B-I-4(D)
PEORIA-TAZEWELL COUNTIES

MTA, INCORPORATED

DESIGNED J.N. CHECKED G. C.
DRAWN K.T.B. DATE 12-11-87 NO. 85-12

ROUTE NO	SECTION	COUNTY	TOTAL SHEETS	SHEET NO
F.A. 669	⊗	PEORIA TAZEWELL	82	29
FED ROAD DIST NO 7	ILLINOIS	PROJECT	[redacted]	

⊗ 103B-1-4(D) SHEET 27 OF 70

ELEVATIONS - SPANS 28-34

STRINGERS 2 & 6

LOCATION	STATION	OFFSET	THEORETICAL GRADE ELEVATIONS	THEORETICAL GRADE ELEV'S ADJ. FOR D.L. DEFLECTION
C.L. PIER 27	32+06.900	10.000	489.779	489.779
KE	32+16.900	10.000	489.550	489.586
KF	32+26.900	10.000	489.321	489.393
KG	32+36.900	10.000	489.092	489.177
KH	32+46.900	10.000	488.863	488.961
KI	32+56.900	10.000	488.634	488.722
KJ	32+66.900	10.000	488.405	488.480
KK	32+76.900	10.000	488.176	488.218
C.L. PIER 28	32+88.740	10.000	487.905	487.905
KL	32+98.740	10.000	487.676	487.693
KM	33+08.740	10.000	487.447	487.476
KN	33+18.740	10.000	487.218	487.255
KO	33+28.740	10.000	486.989	487.019
KP	33+38.740	10.000	486.760	486.779
C.L. PIER 29	33+49.820	10.000	486.506	486.506
KQ	33+59.820	10.000	486.277	486.313
KR	33+69.820	10.000	486.048	486.120
KS	33+79.820	10.000	485.819	485.904
KT	33+89.820	10.000	485.590	485.688
KU	33+99.820	10.000	485.359	485.446
KV	34+09.820	10.000	485.116	485.191
KW	34+19.820	10.000	484.859	484.902
C.L. PIER 30	34+31.660	10.000	484.536	484.536
KX	34+41.660	10.000	484.248	484.284
KY	34+51.660	10.000	483.945	484.017
KZ	34+61.660	10.000	483.628	483.713
LA	34+71.660	10.000	483.297	483.395
LB	34+81.660	10.000	482.951	483.038
LC	34+91.660	10.000	482.591	482.665
LD	35+01.660	10.000	482.216	482.258
C.L. PIER 31	35+13.470	10.000	481.755	481.755
LE	35+23.470	10.000	481.349	481.385
LF	35+33.470	10.000	480.929	481.000
LG	35+43.470	10.000	480.494	480.579
LH	35+53.470	10.000	480.045	480.143
LI	35+63.470	10.000	479.581	479.669
LJ	35+73.470	10.000	479.104	479.178
LK	35+83.470	10.000	478.616	478.658
C.L. PIER 32	35+95.240	10.000	478.042	478.042
LL	36+05.240	10.000	477.554	477.590
LM	36+15.240	10.000	477.067	477.138
LN	36+25.240	10.000	476.579	476.664
LO	36+35.240	10.000	476.091	476.189
LP	36+45.240	10.000	475.604	475.691
LQ	36+55.240	10.000	475.116	475.191
LR	36+65.240	10.000	474.628	474.670
C.L. PIER 33	36+76.990	10.000	474.055	474.055
LS	36+86.990	10.000	473.568	473.604
LT	36+96.990	10.000	473.080	473.152
LU	37+06.990	10.000	472.592	472.678
LV	37+16.990	10.000	472.104	472.203
LW	37+26.990	10.000	471.617	471.703
LX	37+36.990	10.000	471.129	471.203
LY	37+46.990	10.000	470.641	470.680
C.L. BRG. E. ABUT.	37+57.750	10.000	470.117	470.117
BACK EAST ABUT.	37+60.080	10.000	470.003	470.003

STRINGERS 3 & 5

LOCATION	STATION	OFFSET	THEORETICAL GRADE ELEVATIONS	THEORETICAL GRADE ELEV'S ADJ. FOR D.L. DEFLECTION
C.L. PIER 27	32+06.900	5.000	489.883	489.883
KE	32+16.900	5.000	489.654	489.690
KF	32+26.900	5.000	489.425	489.497
KG	32+36.900	5.000	489.196	489.281
KH	32+46.900	5.000	488.967	489.065
KI	32+56.900	5.000	488.738	488.826
KJ	32+66.900	5.000	488.509	488.584
KK	32+76.900	5.000	488.280	488.322
C.L. PIER 28	32+88.740	5.000	488.009	488.009
KL	32+98.740	5.000	487.780	487.797
KM	33+08.740	5.000	487.551	487.580
KN	33+18.740	5.000	487.322	487.359
KO	33+28.740	5.000	487.093	487.123
KP	33+38.740	5.000	486.864	486.883
C.L. PIER 29	33+49.820	5.000	486.610	486.610
KQ	33+59.820	5.000	486.381	486.417
KR	33+69.820	5.000	486.152	486.224
KS	33+79.820	5.000	485.923	486.008
KT	33+89.820	5.000	485.694	485.792
KU	33+99.820	5.000	485.463	485.550
KV	34+09.820	5.000	485.220	485.295
KW	34+19.820	5.000	484.963	485.006
C.L. PIER 30	34+31.660	5.000	484.640	484.640
KX	34+41.660	5.000	484.352	484.388
KY	34+51.660	5.000	484.049	484.121
KZ	34+61.660	5.000	483.732	483.817
LA	34+71.660	5.000	483.401	483.499
LB	34+81.660	5.000	483.055	483.142
LC	34+91.660	5.000	482.695	482.769
LD	35+01.660	5.000	482.320	482.362
C.L. PIER 31	35+13.470	5.000	481.859	481.859
LE	35+23.470	5.000	481.453	481.489
LF	35+33.470	5.000	481.033	481.104
LG	35+43.470	5.000	480.598	480.683
LH	35+53.470	5.000	480.149	480.247
LI	35+63.470	5.000	479.685	479.773
LJ	35+73.470	5.000	479.208	479.282
LK	35+83.470	5.000	478.720	478.762
C.L. PIER 32	35+95.240	5.000	478.146	478.146
LL	36+05.240	5.000	477.658	477.694
LM	36+15.240	5.000	477.171	477.242
LN	36+25.240	5.000	476.683	476.768
LO	36+35.240	5.000	476.195	476.293
LP	36+45.240	5.000	475.708	475.795
LQ	36+55.240	5.000	475.220	475.295
LR	36+65.240	5.000	474.732	474.774
C.L. PIER 33	36+76.990	5.000	474.159	474.159
LS	36+86.990	5.000	473.672	473.708
LT	36+96.990	5.000	473.184	473.256
LU	37+06.990	5.000	472.696	472.782
LV	37+16.990	5.000	472.208	472.307
LW	37+26.990	5.000	471.721	471.807
LX	37+36.990	5.000	471.233	471.307
LY	37+46.990	5.000	470.745	470.784
C.L. BRG. E. ABUT.	37+57.750	5.000	470.221	470.221
BACK EAST ABUT.	37+60.080	5.000	470.107	470.107

[redacted]

TOP OF DECK ELEVATIONS
SPANS 28-34
CEDAR STREET BRIDGE
F.A. RTE. 669 SEC. 103B-1-4(D)
PEORIA-TAZEWELL COUNTIES

MTA, INCORPORATED

DESIGNED J.H. CHECKED G.B.M.
DRAWN K.T.B. DATE 12-11-87 NO. 85-12

ROUTE NO	SECTION	COUNTY	TOTAL SHEETS	SHEET NO
FA 669	⊛	PEORIA TAZEWELL	82	30
FED. ROAD DIST. NO. 7		ILLINOIS	PROJECT ~~BHF-669-1~~	

⊛ 103B-1-4(D) SHEET 28 OF 70

ELEVATIONS-SPANS 28-34

STAGE CONST. JOINT

LOCATION	STATION	OFFSET	THEORETICAL GRADE ELEVATIONS	THEORETICAL GRADE ELEV'S ADJ. FOR D.L. DEFLECTION
C.L. PIER 27	32+06.900	1.500	489.956	489.956
KE	32+16.900	1.500	489.727	489.763
KF	32+26.900	1.500	489.498	489.570
KG	32+36.900	1.500	489.269	489.354
KH	32+46.900	1.500	489.040	489.138
KI	32+56.900	1.500	488.811	488.899
KJ	32+66.900	1.500	488.582	488.657
KK	32+76.900	1.500	488.353	488.395
C.L. PIER 28	32+88.740	1.500	488.082	488.082
KL	32+98.740	1.500	487.853	487.870
KM	33+08.740	1.500	487.624	487.653
KN	33+18.740	1.500	487.395	487.432
KO	33+28.740	1.500	487.166	487.196
KP	33+38.740	1.500	486.937	486.956
C.L. PIER 29	33+49.820	1.500	486.683	486.683
KQ	33+59.820	1.500	486.454	486.490
KR	33+69.820	1.500	486.225	486.297
KS	33+79.820	1.500	485.996	486.081
KT	33+89.820	1.500	485.767	485.865
KU	33+99.820	1.500	485.536	485.623
KV	34+09.820	1.500	485.293	485.368
KW	34+19.820	1.500	485.036	485.079
C.L. PIER 30	34+31.660	1.500	484.713	484.713
KX	34+41.660	1.500	484.425	484.461
KY	34+51.660	1.500	484.122	484.194
KZ	34+61.660	1.500	483.805	483.890
LA	34+71.660	1.500	483.474	483.572
LB	34+81.660	1.500	483.128	483.215
LC	34+91.660	1.500	482.768	482.842
LD	35+01.660	1.500	482.393	482.435
C.L. PIER 31	35+13.470	1.500	481.932	481.932
LE	35+23.470	1.500	481.526	481.562
LF	35+33.470	1.500	481.106	481.177
LG	35+43.470	1.500	480.671	480.756
LH	35+53.470	1.500	480.222	480.320
LI	35+63.470	1.500	479.758	479.846
LJ	35+73.470	1.500	479.281	479.355
LK	35+83.470	1.500	478.793	478.835
C.L. PIER 32	35+95.240	1.500	478.219	478.219
LL	36+05.240	1.500	477.731	477.767
LM	36+15.240	1.500	477.244	477.315
LN	36+25.240	1.500	476.756	476.841
LO	36+35.240	1.500	476.268	476.366
LP	36+45.240	1.500	475.781	475.868
LQ	36+55.240	1.500	475.293	475.368
LR	36+65.240	1.500	474.805	474.847
C.L. PIER 33	36+76.990	1.500	474.232	474.232
LS	36+86.990	1.500	473.745	473.781
LT	36+96.990	1.500	473.257	473.329
LU	37+06.990	1.500	472.769	472.855
LV	37+16.990	1.500	472.281	472.380
LW	37+26.990	1.500	471.794	471.880
LX	37+36.990	1.500	471.306	471.380
LY	37+46.990	1.500	470.818	470.857
C.L. BRG. E. ABUT.	37+57.750	1.500	470.294	470.294
BACK EAST ABUT.	37+60.080	1.500	470.180	470.180

℄ RDWY. & STRINGER 4

LOCATION	STATION	OFFSET	THEORETICAL GRADE ELEVATIONS	THEORETICAL GRADE ELEV'S ADJ. FOR D.L. DEFLECTION
C.L. PIER 27	32+06.900	0.000	489.987	489.987
KE	32+16.900	0.000	489.758	489.794
KF	32+26.900	0.000	489.529	489.601
KG	32+36.900	0.000	489.300	489.385
KH	32+46.900	0.000	489.071	489.169
KI	32+56.900	0.000	488.842	488.930
KJ	32+66.900	0.000	488.613	488.688
KK	32+76.900	0.000	488.384	488.426
C.L. PIER 28	32+88.740	0.000	488.113	488.113
KL	32+98.740	0.000	487.884	487.901
KM	33+08.740	0.000	487.655	487.684
KN	33+18.740	0.000	487.426	487.463
KO	33+28.740	0.000	487.197	487.227
KP	33+38.740	0.000	486.968	486.987
C.L. PIER 29	33+49.820	0.000	486.714	486.714
KQ	33+59.820	0.000	486.485	486.521
KR	33+69.820	0.000	486.256	486.328
KS	33+79.820	0.000	486.027	486.112
KT	33+89.820	0.000	485.798	485.896
KU	33+99.820	0.000	485.567	485.654
KV	34+09.820	0.000	485.324	485.399
KW	34+19.820	0.000	485.067	485.110
C.L. PIER 30	34+31.660	0.000	484.744	484.744
KX	34+41.660	0.000	484.456	484.492
KY	34+51.660	0.000	484.153	484.225
KZ	34+61.660	0.000	483.836	483.921
LA	34+71.660	0.000	483.505	483.603
LB	34+81.660	0.000	483.159	483.246
LC	34+91.660	0.000	482.799	482.873
LD	35+01.660	0.000	482.424	482.466
C.L. PIER 31	35+13.470	0.000	481.963	481.963
LE	35+23.470	0.000	481.557	481.593
LF	35+33.470	0.000	481.137	481.208
LG	35+43.470	0.000	480.702	480.787
LH	35+53.470	0.000	480.253	480.351
LI	35+63.470	0.000	479.789	479.877
LJ	35+73.470	0.000	479.312	479.386
LK	35+83.470	0.000	478.824	478.866
C.L. PIER 32	35+95.240	0.000	478.250	478.250
LL	36+05.240	0.000	477.762	477.798
LM	36+15.240	0.000	477.275	477.346
LN	36+25.240	0.000	476.787	476.872
LO	36+35.240	0.000	476.299	476.397
LP	36+45.240	0.000	475.812	475.899
LQ	36+55.240	0.000	475.324	475.399
LR	36+65.240	0.000	474.836	474.878
C.L. PIER 33	36+76.990	0.000	474.263	474.263
LS	36+86.990	0.000	473.776	473.812
LT	36+96.990	0.000	473.288	473.360
LU	37+06.990	0.000	472.800	472.886
LV	37+16.990	0.000	472.312	472.411
LW	37+26.990	0.000	471.825	471.911
LX	37+36.990	0.000	471.337	471.411
LY	37+46.990	0.000	470.849	470.888
C.L. BRG. E. ABUT.	37+57.750	0.000	470.325	470.325
BACK EAST ABUT.	37+60.080	0.000	470.211	470.211

TOP OF DECK ELEVATIONS
SPANS 28-34
CEDAR STREET BRIDGE
F.A. RTE. 669 SEC. 103B-1-4(D)
PEORIA-TAZEWELL COUNTIES

MTA, INCORPORATED

DESIGNED J.N. CHECKED G.C.
DRAWN K.T.B. DATE 12-11-87 NO. 85-12

ROUTE NO	SECTION	COUNTY	TOTAL SHEETS	SHEET NO
F.A.R. 669	⊛	PEORIA TAZEWELL	82	31
FED ROAD DIST NO 7	ILLINOIS	PROJECT	~~BMF-669(~~	

⊛ 103B-I-4(D) SHEET 29 OF 70

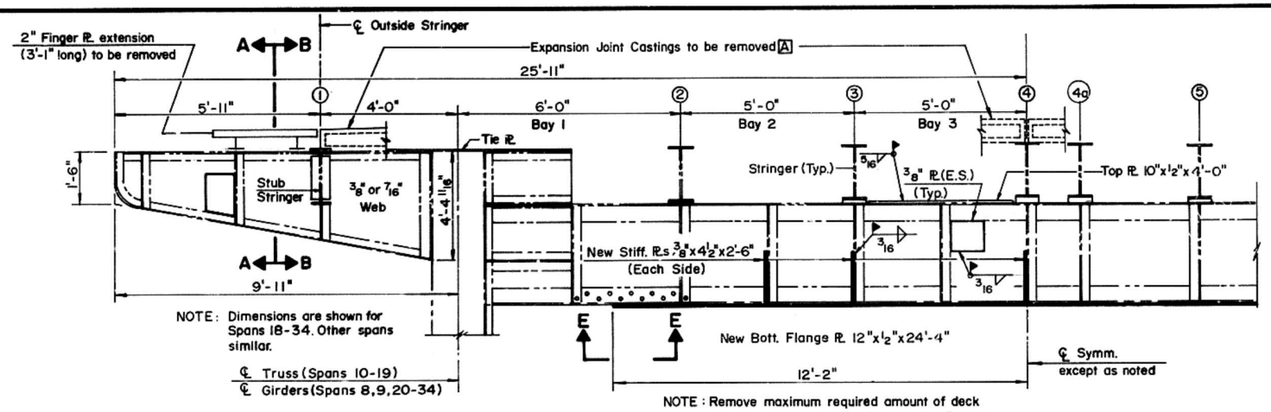

NOTE: Dimensions are shown for Spans 18-34. Other spans similar.

℄ Truss (Spans 10-19)
℄ Girders (Spans 8,9,20-34)

NOTE: Remove maximum required amount of deck concrete before repairing/strengthing Floor Beams.

BEAM FLANGE REPAIR SCHEDULE

Pier No.	Span	Girder
2	2	8
5	5	9

A Expansion Castings Length equals stringer spacing, 4-7/8" ø bolts per stringer, 4 or 6-7/8" ø bolts per top ∠ of diaphrams.

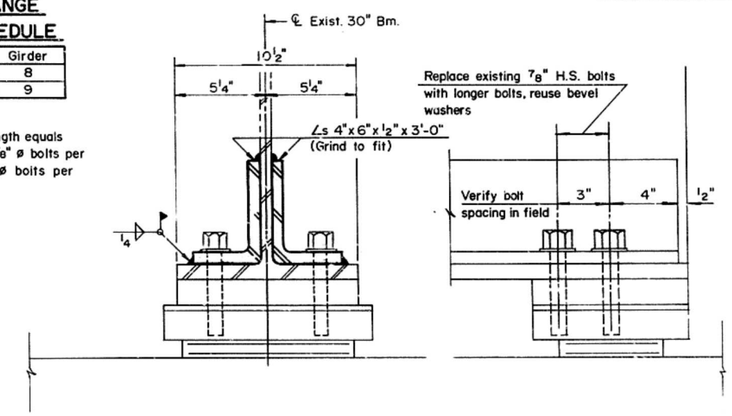

FLOOR BMS. REPAIR SCHEDULE

Pier No.	Span	Description of Repair
9	9	Plate, ℄ Stiffener
10	11	Plate, N. Web (12"x12")+
11	12	Plate, #5 Stiffer
12	12	Plate, #4 Stiffer under Joint
12	13	Plate, 2 ℄ Stiffeners under Joint
15	15	Plate, Bott. Flange, Stiffener
	Midspan 16	Plate, Bott. Flange, 2 Stiffeners at ℄
16	17	Plate, Top & Bott. Flange, Bay 3
18	18	Plate, Web (10"x10")+
23	24	Plate, #5 & #7
25	26	Plate, #5 Stiffener
32	33	Plate, Bott. Flange & Stiffener, Bay 3

CANT. FLOOR BMS. REPAIR SCHEDULE

Pier No.	Span	Description of Repair
11	12	Plate, N. #2 Stiffener
12	12	Plate, S. Stiffener
	Midspan 14	Plate, Bott. Flange
15	15	Plate, N. Web, (10"x12")+ Bott. Flange Stiffener under Joint
16	17	Plate, N. #2 Stiffener
30	31	Plate, N. Cantilever Stiffener

STRINGER REPAIR SCHEDULE

Pier No.	Span	Stringer	Descrip. Repair
10	11	2,3	Plate Web
11	11	2,4,4a,5	" "
12	12	1,4a,5	" "
14	15	4	PL Web, Bott. Flng.
15	15	3,4	Plate Web
15	16	[illegible]	" "
16	16	1,3	" "
16	17	2,5,6	" "
18	19	5	" "
20	21	4	" "
23	23	4	" "
26	27	1	" "
32	32	7	" "
33	34	2	" "

Stringer web repair PLs estimated as 1'-0" long, Verify in field.

ELEVATION CANTILEVER & FLOOR BEAM

(Looking East)
(Spans 8-34; See Schedule)

+ Verify dimensions in field

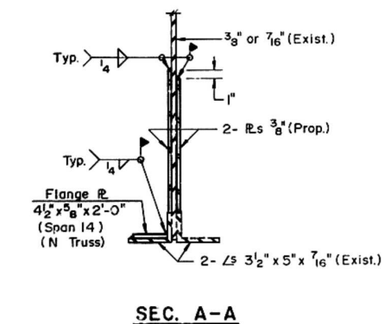

SEC. A-A

(Typ. Details)

NOTE: Cut Web reinf. PLs for opposite side 1" shorter as indicated in Sec. A-A.
Location & size of reinf. PLs to be verified by the Engineer.

DIMENSION A

SPAN	DIMENSION
8	1'-5"
9	1'-3"
10-12	1'-1"
13, 15	1'-4"
Mid-Span 14	0'-11 3/4"
16-34	1'-1"

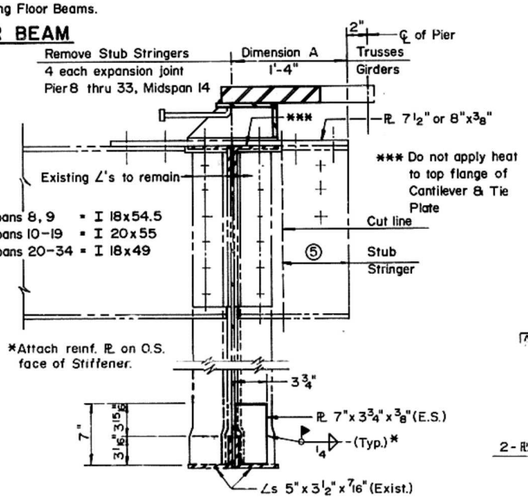

SEC. B-B

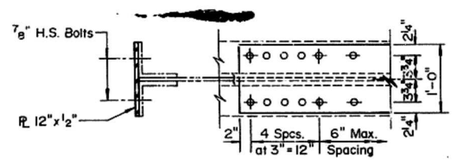

SEC. E-E

BEAM FLANGE REPAIR

(Spans 1 thru 7)

** Supporting diaphragms to be removed. Assembly includes 1 ∠ 4"x4"x1/2", Top 1 ∠ 3 1/2"x3 1/2"x3/8", Bottom 1 Web 10"x3/8", 2 Connecting ∠'s 3 1/2"x3 1/2"x3/8" each end.

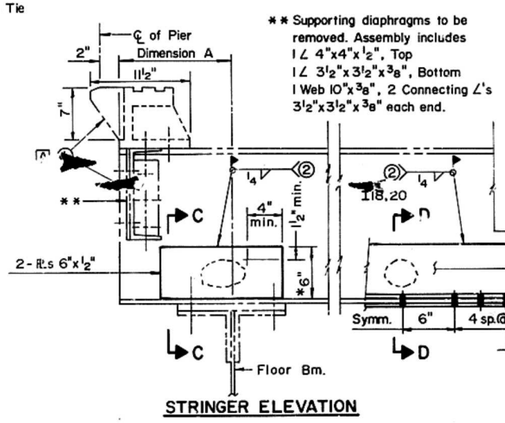

STRINGER ELEVATION

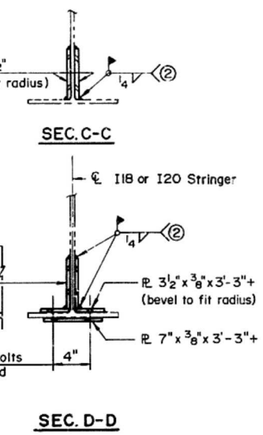

SEC. D-D

INTERIOR STRINGER WEB & FLANGE STRENGTHENING

NOTES: ① Expansion Joint castings, 3'-1" extension PL's, & end supporting diaphragms shall be removed at 23 locations. No salvage. Quantity removed to be paid for as Structural Steel Removal. Estimated Weight of castings = 4270 lbs., each span, each pier.

* If 6" height is insufficient to provide the required 1 1/2" vertical clearance above web hole the 6" shall be increased to provide the required clearance.

a) Stringer web reinforcement PL's shall not be cut to length until area of section is measured and sandblasted.

b) Contractor shall verify locations & dimensions before commencing operations.

c) Add additional PL's over holes as directed by the Engineer and where web section loss exceeds 50%.

[redacted] welding permitted on stringer [redacted] later than 3' from ℄ Floor Bm.

③ Structural Steel Repair includes furnishing, fabricating, installing, and painting strengthening plates and accessory items. See Special Provisions.

④ Structural Steel Removal includes Rivet Removal unless otherwise provided.

⑤ Removal of stub stringers to be paid for as Cutting Structural Steel. The weight of the attached diaphragm assembly is billed as Structural Steel Removal.

Utility hanger and other Structural Steel no longer functional shall be removed and paid for as Structural Steel Removal.

BILL OF MATERIAL

	ITEM	UNIT	QUANTITY
④	Structural Steel Removal	Lbs.	306,870
③	Structural Steel Repair	Lbs.	3,550
⑤	Cutting Structural Steel	Lin. Ft.	307

See sheet 50 for details of new diaphragms at mid-span 14 and structural steel quantity.

STEEL REPAIR DETAILS
CEDAR STREET BRIDGE
F.A. RTE. 669 SEC. 103B-I-4(D)
PEORIA TAZEWELL COUNTIES

MTA, INCORPORATED

DESIGNED J.N. CHECKED G.B.M.
DRAWN R.H.H. DATE 12-11-87 NO. 85-12

ROUTE NO.	SECTION	COUNTY	TOTAL SHEETS	SHEET NO.
F.A.669	⊛	PEORIA TAZEWELL	82	32
FED. ROAD DIST. NO. 7		ILLINOIS	PROJECT	[redacted]

⊛ 103B-1-4(D)

SHEET 30 of 70

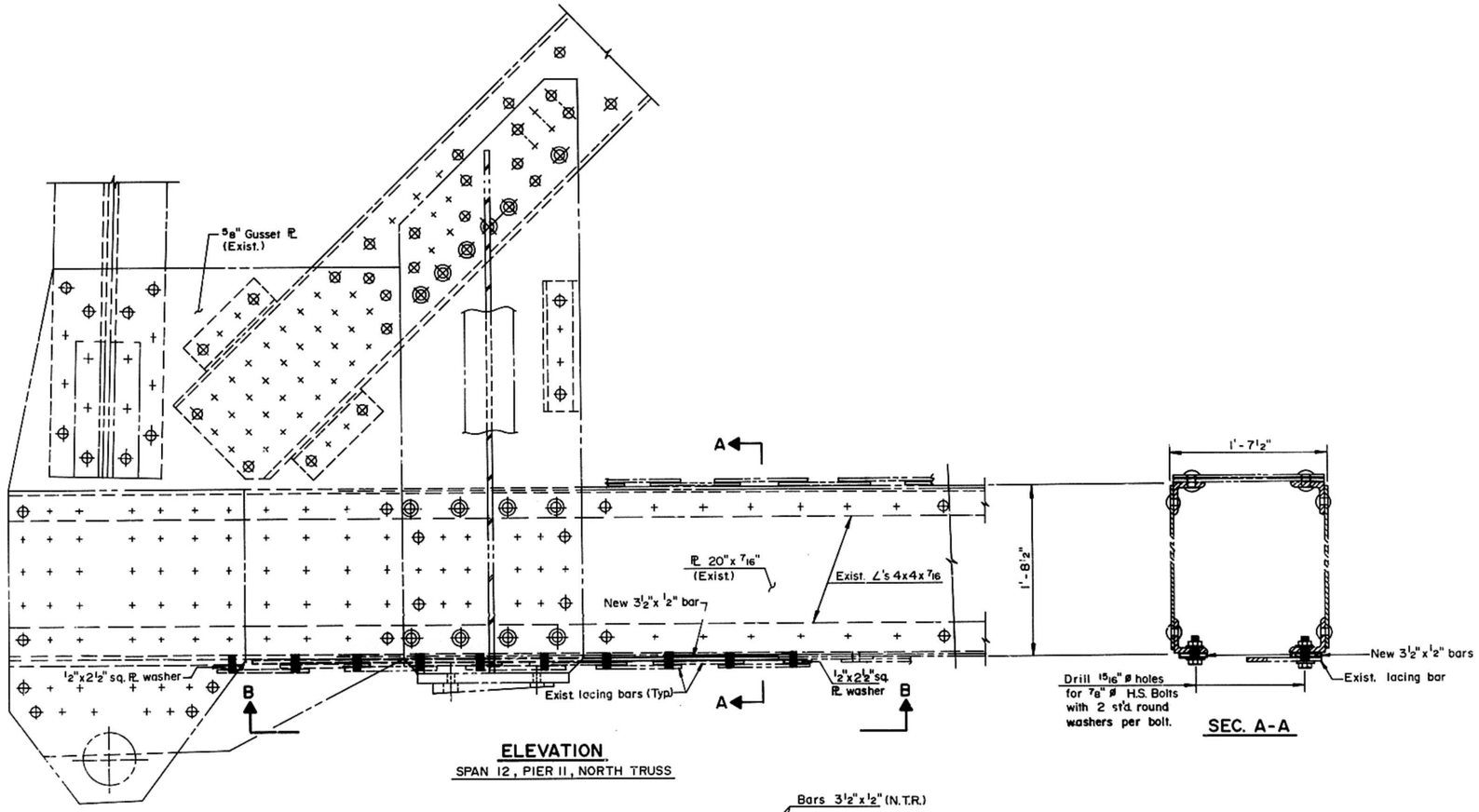

ELEVATION

SPAN 12, PIER 11, NORTH TRUSS

SEC. A-A

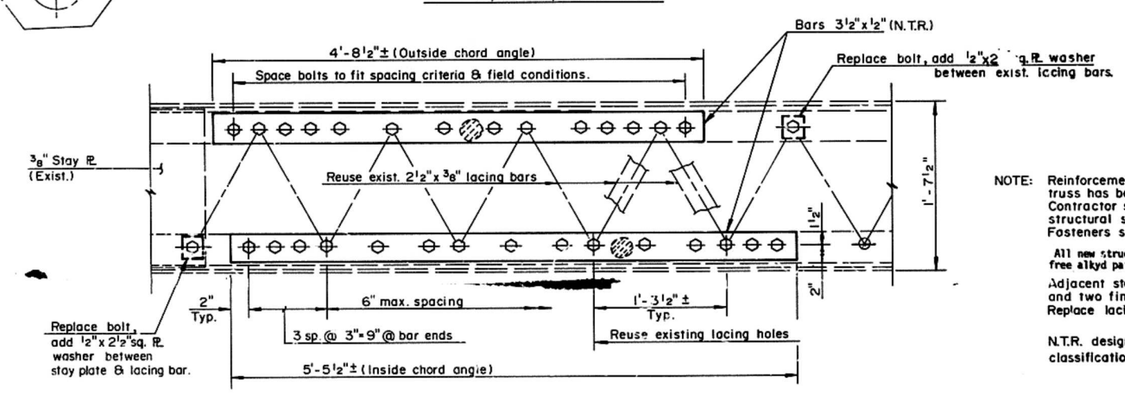

SECTION B-B

NOTE: Reinforcement operations shall be scheduled when the concrete deck above the truss has been removed.
Contractor shall verify dimensions and member condition before ordering structural steel bars.
Fasteners shall be 7/8" ø H.S. bolts, AASHTO Classification M-164.

All new structural steel shall receive one coat of the lead and chromate free alkyd paint system primer and two coats of aluminum paint.

Adjacent steel marred in assembling [redacted] be cleaned, spot painted with primer and two finish coats. Cleaning and painting is incidental to structural steel costs.
Replace lacing bars if section loss exceeds 25%.

N.T.R. designates Notch Toughness Requirements; Structural Steel A.A.S.H.T.O. classification M-223, Grade 50.

BILL OF MATERIAL

Item	Unit	Quantity
Structural Steel *	Lbs.	100

* Includes H.S. bolts and washers.

[redacted] STEEL REPAIR DETAILS
LOWER CHORD REINFORCEMENT
SPAN 12, PIER 11, NORTH TRUSS
CEDAR STREET BRIDGE
F.A. RTE. 669 SEC. 1033-1-4(D)
PEORIA-TAZEWELL COUNTIES

MTA, INCORPORATED

DESIGNED J.N. CHECKED G.B.M.
DRAWN D.D.R. DATE 12-11-87 NO. 85-12

ROUTE NO	SECTION	COUNTY	TOTAL SHEETS	SHEET NO
F.A.	⊗	PEORIA TAZEWELL	82	33
FED ROAD DIST NO 7	ILLINOIS	PROJECT		

⊗ 103B-I-4(D) SHEET 31 OF 70

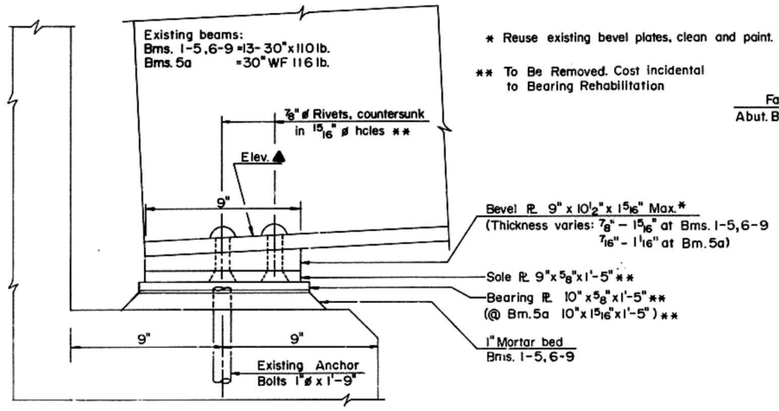

* Reuse existing bevel plates, clean and paint.

** To Be Removed. Cost incidental to Bearing Rehabilitation

ELEVATION

At Abutment Expansion Bearing locations Rivets and Sole PL to be removed. Bevel PL to be cleaned, painted, (see Spec. Prov.) and reused. Ream holes in flange and bevel plate to 1" ø.

EXISTING PLATE DIMENSIONS ++

BM.	A	B	C	D	E	F
1	1 3/4	7 1/4	1 3/4	10 3/4	1 3/4	5 1/2
2	1 7/8	7	1 7/8	10 3/4	1 3/4	5 1/2
3	1 3/4	7 1/4	1 3/4	10 3/4	2	5 3/4
4	1 3/4	7 1/4	1 3/4	10 3/4	1 3/4	5 1/2
5	1 3/4	7 1/4	1 3/4	10 3/4	1 3/4	5 1/2
5a	2 5/8	5 1/2	2 5/8	10 3/4	4 5/8	0
6	1 3/4	7 1/4	1 3/4	10 3/4	2	5 1/2
7	1 3/4	7 1/4	1 3/4	10 3/4	1 3/4	5 1/2
8	1 7/8	7	1 7/8	10 3/4	2 1/4	5 3/8
9	1 3/4	7 1/4	1 3/4	10 3/4	2	5 1/2

++ Bolt spacing has been determined in the field to match existing hole spacing in beam and Bevel PLs.

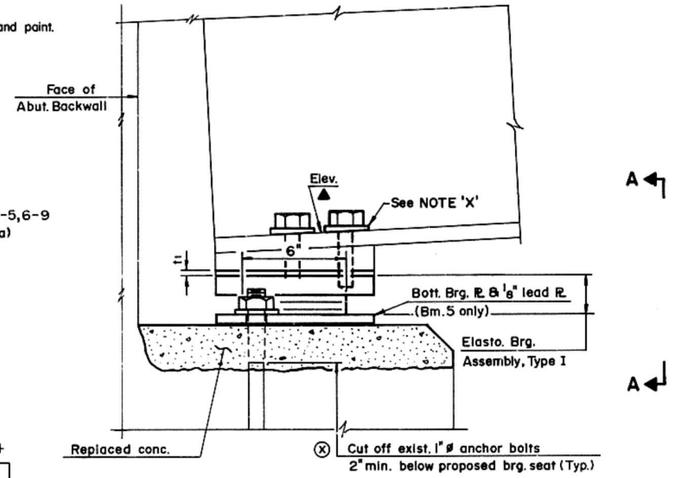

ELEVATION BEAM 5
ELASTOMERIC EXP. BRG., TYPE I

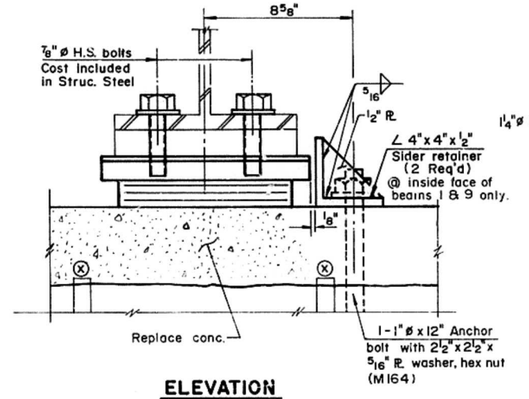

ELEVATION

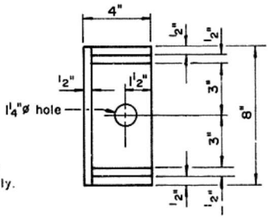

NOTE: Equivalent built-up plates with be allowed in lieu of rolled angle with stiffener.

PLAN
SIDE RETAINER

Structural Steel Wt. = 14 lb. ea. The cost of furnishing and installing retainers and anchor bolts is included in structural steel.

EXPANSION BEARING, TYPE I

(Bms. 1-4 & 5a-9)

NOTES

Conversion of exist. brgs., cutting anchor bolts, and installation of replacement assemblies is billed as Bearing Rehabilitation.

'X' - Exist. rivets to be removed; Replace with 7/8" ø H.S. bolts & 2 1/2" x 2 1/2" x 5/16" PL, Bevel Washers (M164), Thread bolt 3/4" min. into Top Bearing PL.

▲ - Contractor shall take elevations of beams before commencing jacking operations. Reset beams to original elevations after pier cap repairs have been completed.

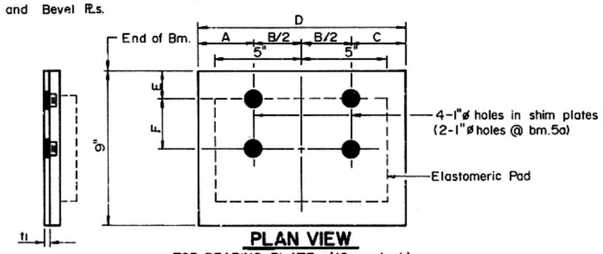

PLAN VIEW

TOP BEARING PLATE – (10 required)
SHIM PLATES – (See General Notes)

Bms.	t1
4	1 1/8
5a	1 1/2
6	1 1/8

□SHIM PL TABLE

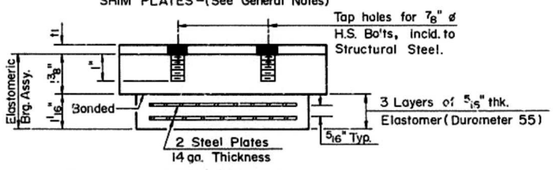

ELASTOMERIC EXPANSION BEARING, TYPE I

10 Required

Note: Shim plates shall not be placed under bearing assembly except for Bearing Plate @ Beam 5.

□Contractor shall verify shim thickness required for installation of Elastomeric Bearing.

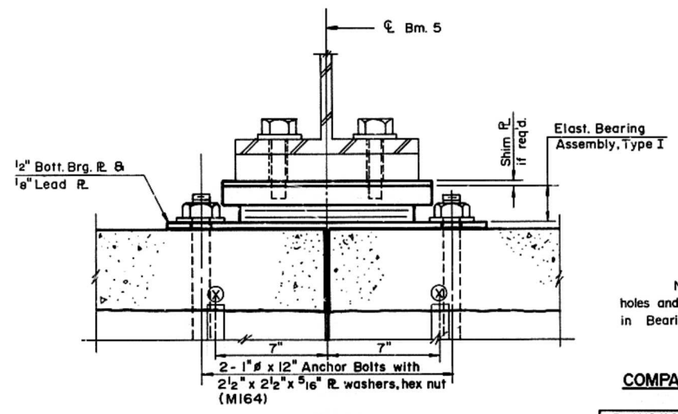

VIEW A-A

(Bm. 5 only)

NOTE: Drilling of 1 1/8" ø anchor bolt holes and grouting of anchor bolts is included in Bearing Rehabilitation.

COMPARISON OF BEAM DESIGNATION
SPANS 1-7

PLANS/CONTRACT	BEAM NUMBER									
Sec. 103B-I-4	1	2	3	4	5	6	7	8	9	10
Sec. 103B-I-4(D)	1	2	3	4	5	5a	6	7	8	9

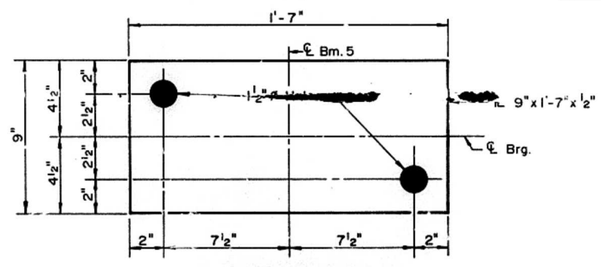

BOTTOM BEARING PLATE

(1/8" Lead PL similar)

For details of Elastomeric Bearing, Type I Supporting parapet beams in spans 1-7 See Sheet 32.
See Sheet 70 for Anchor Bolt installation.

BILL OF MATERIAL

ITEM	Unit	Quantity
Elastomeric Bearing Assembly, Type I	Each	10
Bearing Rehabilitation	Each	10
Structural Steel	Lbs.	200

WEST ABUTMENT BEARINGS
BEAMS 1-9
CEDAR STREET BRIDGE
F.A. RTE. 369 SEC. 103B-I-4(D)
PEORIA-TAZEWELL COUNTIES

MTA, INCORPORATED

DESIGNED J.N. CHECKED G.B.M.
DRAWN R.H.H. DATE 12-11-87 NO. 85-12

ROUTE NO.	SECTION	COUNTY	TOTAL SHEETS	SHEET NO.
F.A.669	⊛	PEORIA TAZEWELL	82	34
FED. ROAD DIST. NO. 7	ILLINOIS	PROJECT ~~BHF-669(-)~~ ⊛ 103B-I-4(D)	SHEET 32 OF 70	

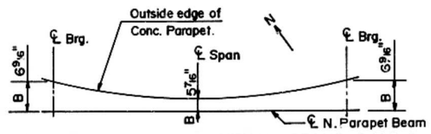

NORTH PARAPET BEAM POSITION - SPANS 2,3 & 4

See Sheet 40

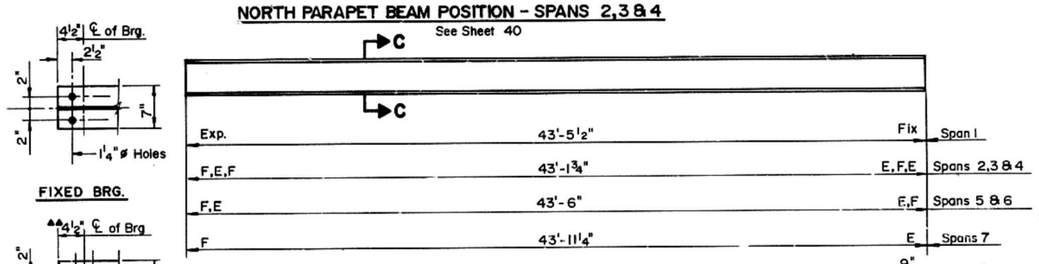

PARAPET GIRDER ELEVATION--NORTH PARAPET

(Horizontal Dimensions)

℄ Grade = 4.95%

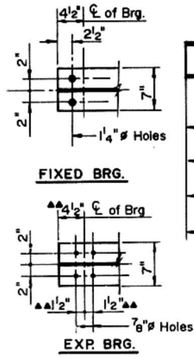

END OF BM. DETAILS

(Bott. Flange)

▲▲Does not apply to pier 7

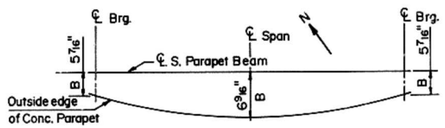

SOUTH PARAPET BEAM POSITION - SPANS 2,3 & 4

See Sheet 40

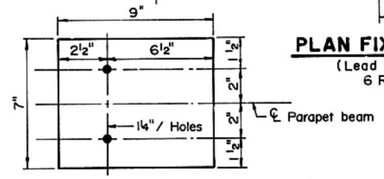

PLAN BEVEL ℞ FIXED BRG. C1 & C2▲

Contractor shall adjust Parapet Beam forms for Dead Load Deflection. For deflection see Sht. 4.

Details of Existing Parapet Beam Bearing assembly at West Abutment are not available Existing bearing plates shall be removed and anchor bolts ground clean 1/16" min., below the concrete surface.

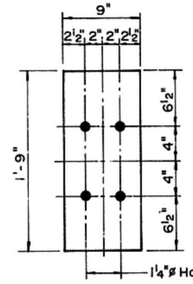

PLAN FIXED BRG. ℞ C

(Lead ℞ similar)

6 Req'd.

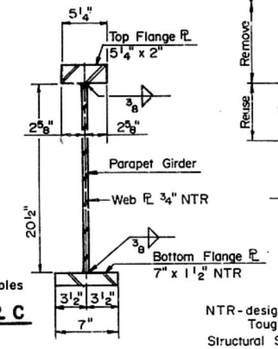

SECTION C-C

▲ Provide 2 additional C2 plates 1½" thick and 2-⅛" lead plates of this size for use at Pier 4, Span 5 bearing.

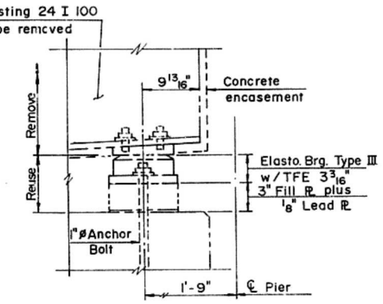

EXISTING

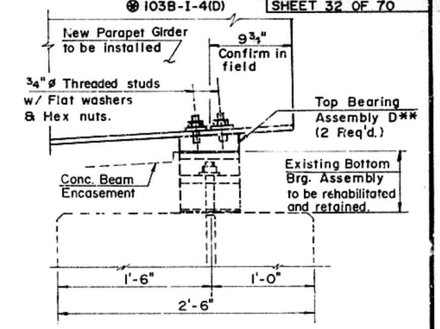

PROPOSED

PARAPET BEAM BEARING - PIER 7

NTR - designates Notch Toughness Requirements

Structural Steel used in the New Parapet Beam shall conform to the requirements of AASHTO M 223. Grade 50

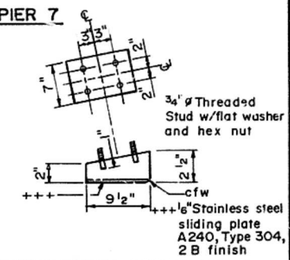

TOP BEARING ASSEMBLY-D

* The furnishing and installaion of fixed bearing assemblies, including all plates and anchor bolts, complete, is included as pounds of structural steel. Estimated weight of fixed bearing assemblies is 1390 lbs.

** The furnishing and installation of Top Bearing Assembly D, complete is included as pounds of Structural Steel Estimated wt. 110 lbs.

*** 1"ø x 12" Anchor Bolts, fully grouted in 1⅛"ø Drilled holes. Use 2½" x 2½" x 5/16" Bevel ℞ washers & heavy hex nuts, finger tight and punch set.

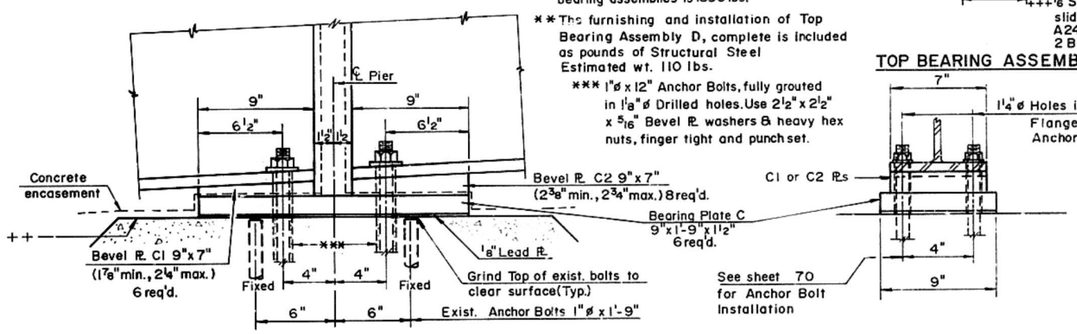

PARAPET BEAM FIXED BEARING*

(At Piers 1, 3 & 6 - Pier 4E similar)

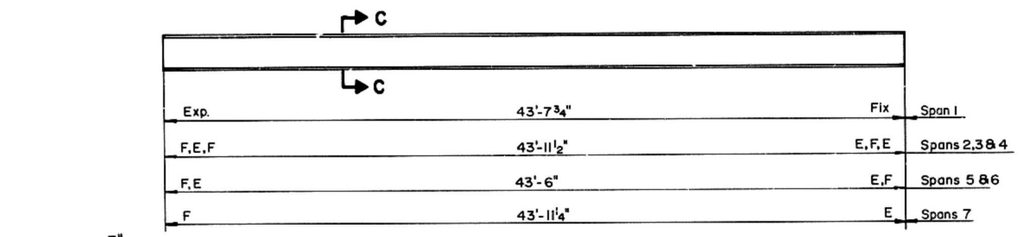

PARAPET GIRDER ELEVATION-SOUTH PARAPET

(Horizontal Dimension)

℄ Grade = 4.95%

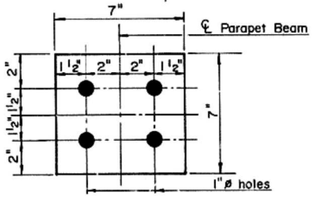

PLAN-BEVEL ℞ EXP. BRG. B1, B2

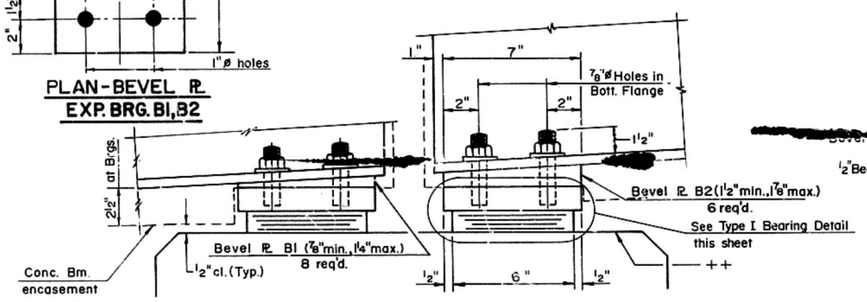

PARAPET BEAM ELASTOMERIC EXP. BRG. TYPE I

(At Pier 2 & 5; W. Abut. & Pier 4W similar)

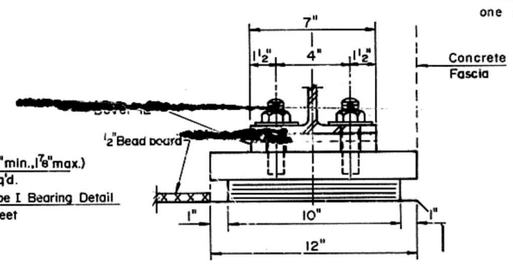

++ Seat elevation could be ± 10" lower due to Phase I Construction difficulties. Additional Class X included in this contract. Elevations of exist. bottom flange should be taken to ensure new beams are put back @ same elevation.

NOTE:

All fasteners at the new bearings to the parapet beams shall be given a field coat of primer before concrete encasement is applied.

All parapet beams shall be painted with one shop coat of primer.

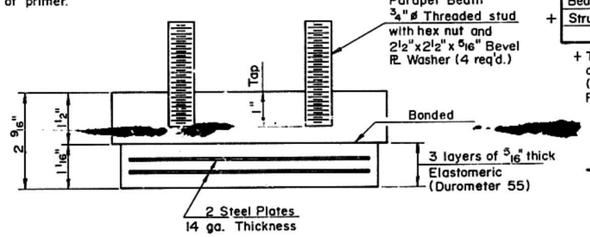

TYPE I BEARING DETAIL

(12 req'd)

BILL OF MATERIAL

	ITEM	Unit	Quantity
	Elasto. Brg. Assembly, Type I	Each	12
	Structural Steel	Lbs.	78,770
	Bearing Rehabilitation	Each	2
+	Structural Steel Removal	Lbs.	63,500

\+ The removal of Exist. Parapet Bm. Brgs., exclusive of Pier 7, is included with Parapet Bm. Removal (24 I 100) (totally enclosed) as Structural Steel Removal. No Salvage.

PARAPET BMS., ELASTO. BRGS.
SPANS 1-7
CEDAR STREET BRIDGE
F.A. RTE. 669 SEC. 103B-I-4(D)
PEORIA TAZEWELL COUNTIES

MTA, INCORPORATED

DESIGNED P.B.L. CHECKED J.N.
DRAWN D.D.R. & R.H.H. DATE 12-11-87 NO. 85-12

ROUTE NO.	SECTION	COUNTY	TOTAL SHEETS	SHEET NO.
FA669	(X)	PEORIA TAZEWELL	82	35
FED. ROAD DIST. NO. 7		ILLINOIS	PROJECT	

* 103B-I-4(D) SHEET 33 OF 70

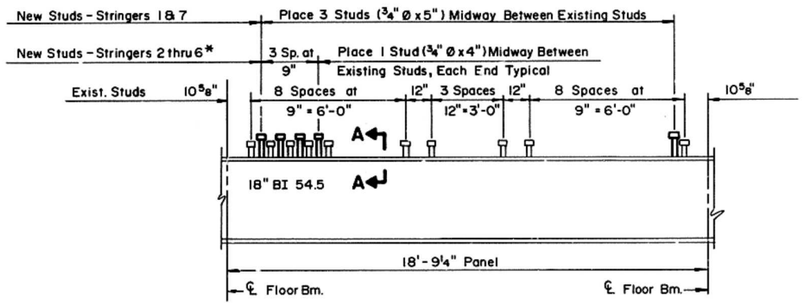

SHEAR STUD LAYOUT - SPAN 8 STRINGERS

① ⑦ 21 x 3 Studs Per Panel x 2 Stringers x 7 Panels Per Span
②thru⑥ 8 x 1 Studs Per Panel x 5 Stringers x 7 Panels Per Span

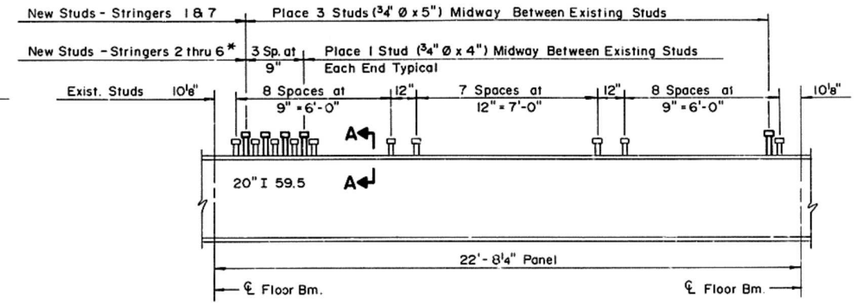

SHEAR STUD LAYOUT - SPAN 13, 15 STRINGERS

① ⑦ 25 x 3 Studs Per Panel x 2 Stringers x 9 Panels Per Span
②thru⑥ 8 x 1 Studs Per Panel x 5 Stringers x 9 Panels Per Span

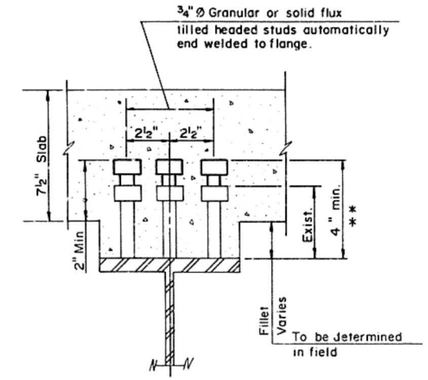

SECTION A-A

Stringers 1&7

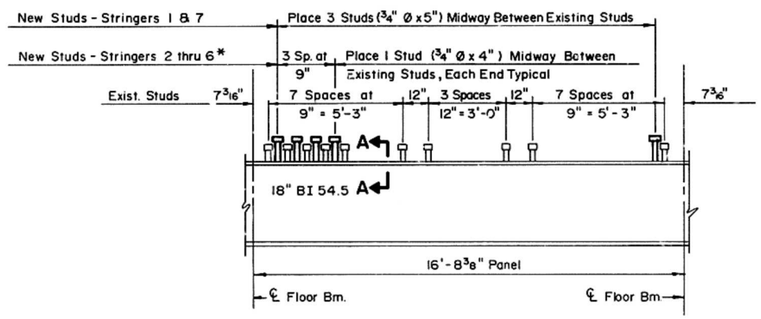

SHEAR STUD LAYOUT - SPAN 9 STRINGERS

①⑦ 19 x 3 Studs Per Panel x 2 Stringers x 5 Panels Per Span
②thru⑥ 8 x 1 Studs Per Panel x 5 Stringers x 5 Panels Per Span

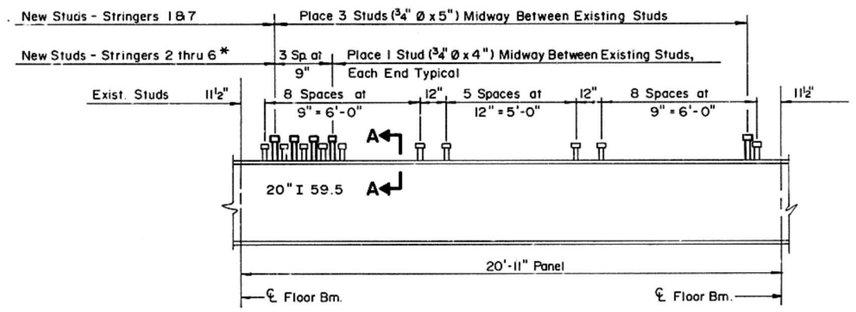

SHEAR STUD LAYOUT - SPAN 14 STRINGERS

① ⑦ 23 x 3 Studs Per Panel x 2 Stringers x 7 Panels Per Half Span
②thru⑥ 8 x 1 Studs Per Panel x 5 Stringers x 7 Panels Per Half Span

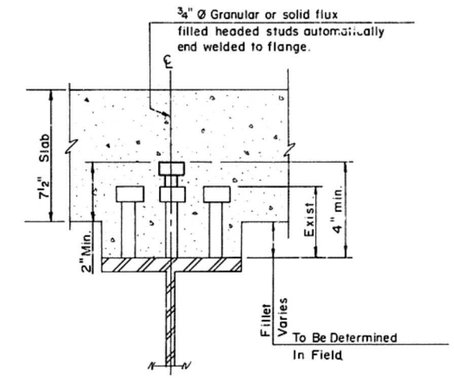

SECTION A-A

Stringers 2 thru 6*

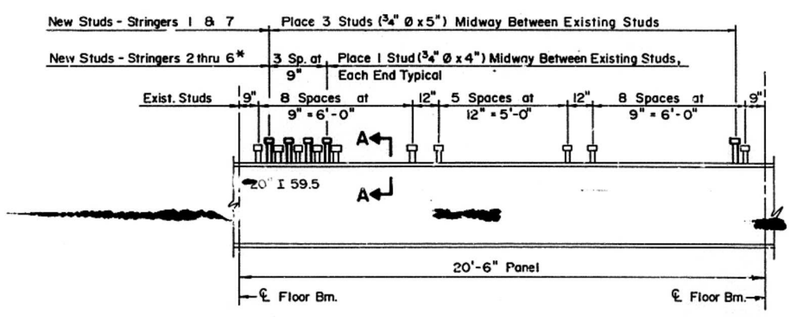

SHEAR STUD LAYOUT - SPAN 10-12, 16, 17 STRINGERS

① ⑦ 23 x 3 Studs Per Panel x 2 Stringers x 8 Panels Per Span
②thru⑥ 8 x 1 Studs Per Panel x 5 Stringers x 8 Panels Per Span

NOTE: Additional Shear Connectors are not req'd in Spans 1-7.

* Omit additional Shear Connectors on Stringer 4a

** Studs 5" high are required on Stringers 1&7 in Spans 8-17. 5" Studs shall be used on other stringers where the fillet height exceeds 2".

BILL OF MATERIAL

ITEM	UNIT	QUANTITY
Stud Shear Connectors	Each	14,964

ADDITIONAL STUD SHEAR CONNECTORS
SPANS 8-17
CEDAR STREET BRIDGE
F.A. RTE. 669 SEC. 103B-I-4(D)
PEORIA TAZEWELL COUNTIES

MTA, INCORPORATED

DESIGNED JN CHECKED GBM
DRAWN SWS DATE 12-11-87 NO. 85-12

ROUTE NO	SECTION	COUNTY	TOTAL SHEETS	SHEET NO
F.A.669	⊛	PEORIA TAZEWELL	82	36
FED ROAD DIST NO 7	ILLINOIS	PROJECT		
⊛ 103B-I-4(D)		SHEET 34 OF 70		

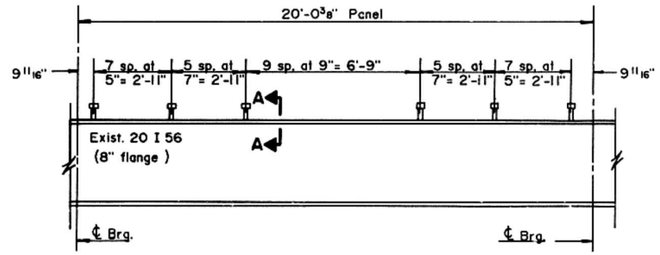

SHEAR STUD LAYOUT - SPAN 18 & 19 STRINGERS

68 Studs Per Panel × 7 Stringers × 8 Panels Per Span

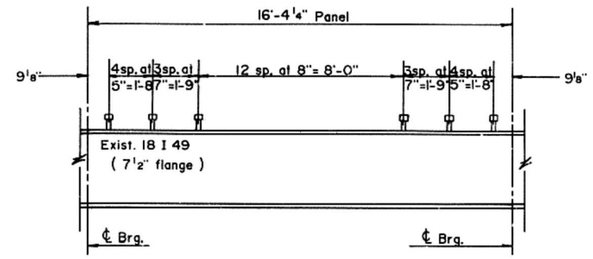

SHEAR STUD LAYOUT - SPAN 20-24 STRINGERS

54 Studs Per Panel × 7 Stringers × 6 Panels Per Span

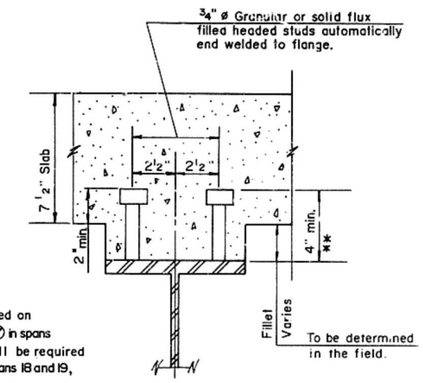

SECTION A-A

** Studs 5" high are required on outside stringers ① and ⑦ in spans 20 to 34. 6" studs shall be required for these stringers in spans 18 and 19, confirm in field.

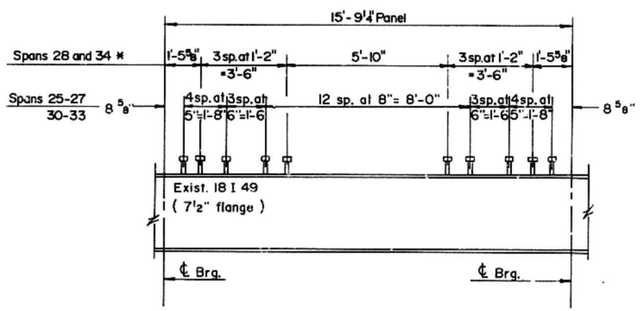

SHEAR STUD LAYOUT - SPAN 25-28, 30-34 STRINGERS

Spans 28-34 - 16 Studs Per Panel × 7 Stringers × 5 Panels Per Span
Other Spans - 54 Studs Per Panel × 7 Stringers × 5 Panels Per Span

* In spans 28 and 34, stud shear connectors, at 1'-2" spacing, 3 per location have been previously installed on stringers. This contract includes the placing of additional studs to supplement the existing connectors.

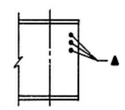

END OF STRINGERS TYPICAL

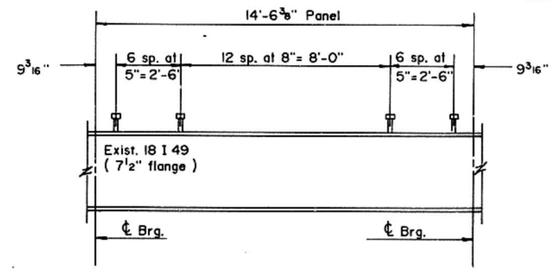

SHEAR STUD LAYOUT - SPAN 29 STRINGERS

50 Studs Per Panel × 7 Stringers × 4 Panels Per Span

BILL OF MATERIAL

ITEM	UNIT	QUANTITY
Stud Shear Connectors	Each	34,706
Structural Steel Removal	Lbs.	9,320
Structural Steel Repair	Lbs.	1,650

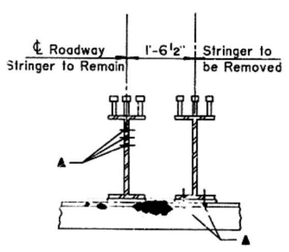

SECTION B-B
Looking East

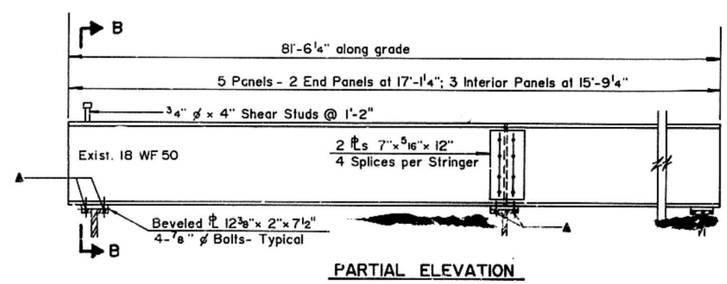

PARTIAL ELEVATION

▲ After removal of end diaphragm & extra stringers in Spans 28 & 34 fill all existing empty rivet and bolt holes with 7/8" ø H.S. Bolts. The cost of furnishing and installing the aforesaid bolts shall be paid for at the contract unit price for Structural Steel Repair.
Estimated quantity 1714 = 1650 lbs.

STRUCTURAL STEEL REMOVAL

Remove Surplus Stringer and Bearing Plates in Spans 28 and 34
No Salvage

STUD SHEAR CONNECTORS
SPANS 18-34
STRINGER REMOVAL - SPANS 28, 34
CEDAR STREET BRIDGE
F.A. RTE. 669 SEC. 103B-I-4(D)
PEORIA TAZEWELL COUNTIES

MTA, INCORPORATED

DESIGNED G.B.M. CHECKED J.N.
DRAWN M.M. DATE 12-11-87 NO. 85-12

ROUTE NO	SECTION	COUNTY	TOTAL SHEETS	SHEET NO
F.A.669	⊗	PEORIA TAZEWELL	82	37
FED ROAD DIST NO 7	ILLINOIS	PROJECT ~~THF-669(---)~~		
⊗103B-I-4(D)		SHEET 35 OF 70		

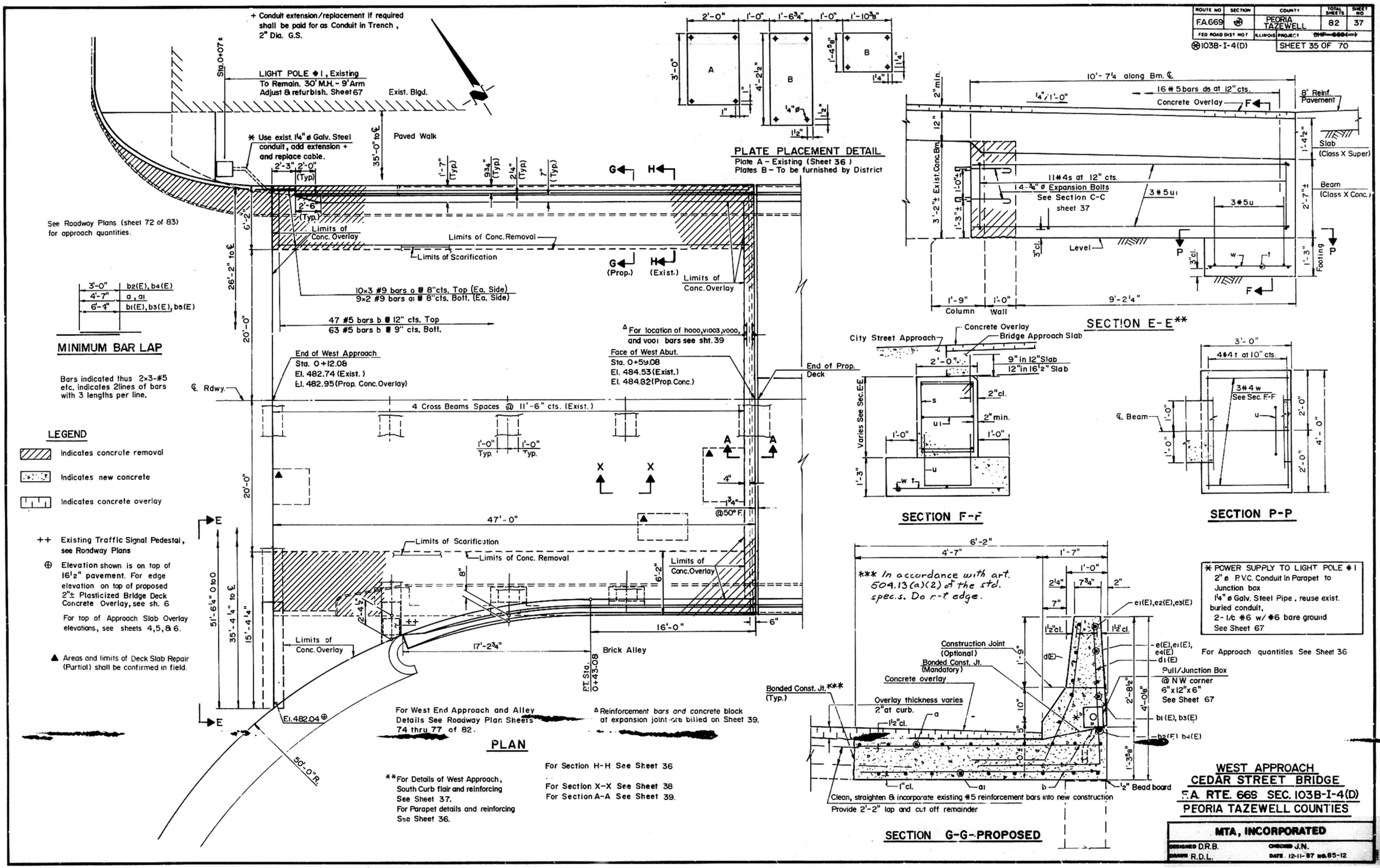

WEST APPROACH
CEDAR STREET BRIDGE
F.A. RTE. 669 SEC. 103B-I-4(D)
PEORIA TAZEWELL COUNTIES

MTA, INCORPORATED
DESIGNED D.R.B. CHECKED J.N.
DRAWN R.D.L. DATE 12-11-87 No. 85-12

ROUTE NO	SECTION	COUNTY	TOTAL SHEETS	SHEET NO.
F.A. 669	(38)	PEORIA TAZEWELL	82	38
FED ROAD DIST NO 7	ILLINOIS	PROJECT ~~BHF-669(-)~~		
(38) 103B-I-4(D)		SHEET 36 OF 70		

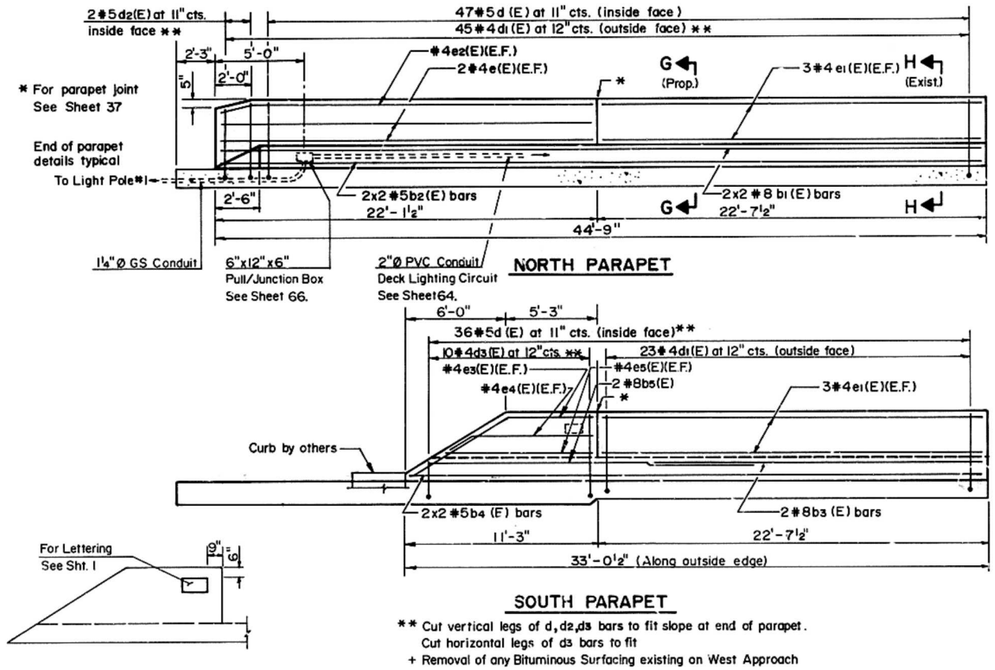

** Cut vertical legs of d, d2, d3 bars to fit slope at end of parapet.
Cut horizontal legs of d3 bars to fit
+ Removal of any Bituminous Surfacing existing on West Approach is incidental to Bridge Deck Scarification.
Note: Min. bar lap 2'-2" for b4 bars.

NAME PLATE LOCATION
INSIDE FACE, SOUTH PARAPET

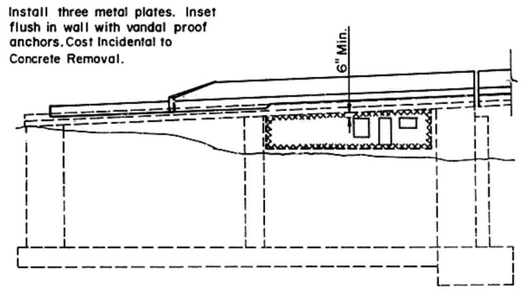

ELEVATION OF SOUTH APPROACH WALL
WEST ABUT.

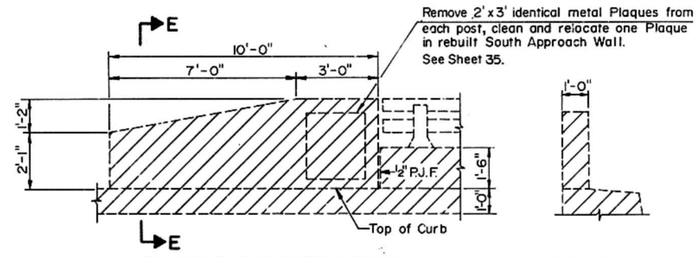

EXISTING END POST DETAIL
To Be Removed

SECTION E-E

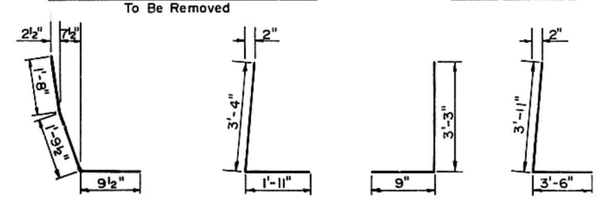

BAR d (E) BAR d1 (E) BAR d2 (E) BAR d3 (E)

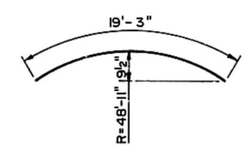

BAR b5 (E)

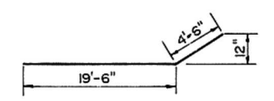

BAR a2

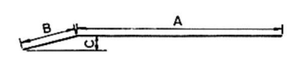

BAR e2 (E), e3 (E) ~~e4 (E)~~

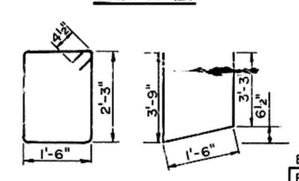

BAR s BAR u2

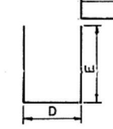

BAR u, u1

BAR DIMENSION TABLE

BAR	A	B	C	D	E
e2	19'-9"	2'-0"	5"		
e3	5'-3"	3'-9"	1'-4"		
e4	6'-6"	9"	4"		
u				1'-4"	2'-4"
u1				1'-5"	10'-4"

BILL OF MATERIAL - WEST APPROACH

Bar	No.	Size	Length	Shape
a	60	#9	18'-9"	—
a1	36	#9	25'-9"	—
a2	4	#9	24'-0"	—
a3	10	#9	14'-6"	—
a4	3	#5	10'-0"	—
a5	4	#5	14'-6"	—
b	195	#5	6'-0"	—
b1 (E)	4	#8	25'-6"	—
b2 (E)	4	#5	23'-9"	—
b3 (E)	2	#8	19'-0"	—
b4 (E)	4	#5	17'-9"	—
b5 (E)	2	#8	19'-3"	⌒
b6	11	#5	8'-6"	—
b7	7	#5	10'-3"	—
b8	7	#5	14'-6"	—
b9	10	#5	11'-3"	—
d (E)	83	#5	4'-3"	⌊
d1 (E)	68	#4	5'-3"	∠
d2 (E)	2	#5	4'-0"	⌊
d3 (E)	10	#5	7'-5"	∠
d4 (E)	15	#6	3'-0"	—
d5	16	#5	2'-0"	—
e (E)	4	#4	21'-9"	—
e1 (E)	12	#4	22'-3"	—
e2 (E)	2	#4	21'-9"	⌒
e3 (E)	2	#4	9'-0"	⌒
e4 (E)	2	#4	7'-3"	⌒
e5 (E)	2	#4	8'-3"	—
s	15	#4	8'-3"	⊡
t	4	#4	3'-9"	—
u	3	#5	6'-0"	U
u1	3	#5	22'-1"	U
u2	3	#5	8'-6"	U
w	3	#4	2'-9"	—

Item	Unit	Quantity
Bridge Deck Scarification	Sq. Yds.	210
Concrete Removal	Cu. Yds.	36.6
Class X Concrete	Cu. Yds.	3.5
Class X Concrete Superstructure	Cu. Yds.	36.0
Reinforcement Bars	Lbs.	9,750
Reinf. Bars (Epoxy Coated)	Lbs.	1,710
Deck Slab Repair (Partial)	Sq. Yds.	* 10
Name Plates	Each	One
Structure Excavation	Cu. Yds.	10
Plasticized Bridge Deck Concrete Overlay	Sq. Yds.	267
Expansion Bolts, ¾"ø	Each	8

For reinforcement bar locations in Approach See Sheets 35& 37.

*Estimated

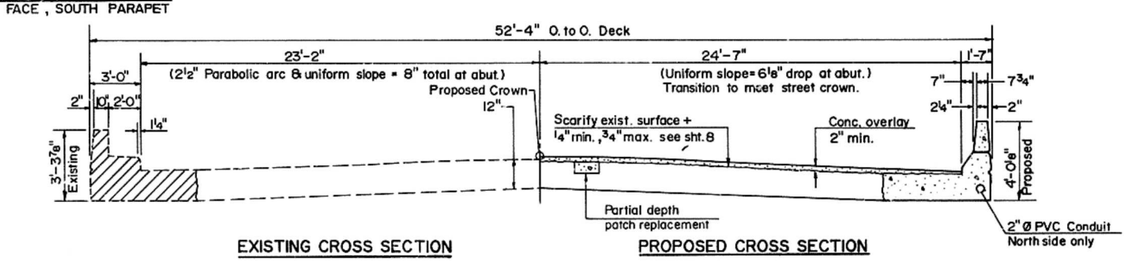

EXISTING CROSS SECTION PROPOSED CROSS SECTION

WEST APPROACH

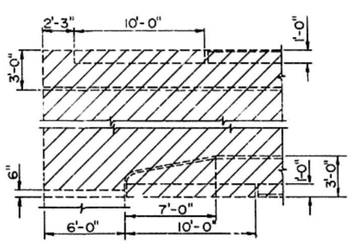

PLAN OF EXIST. SAFETY WALKS

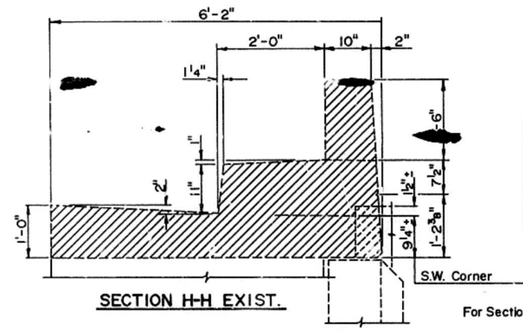

SECTION H-H EXIST.

For Section G-G See Sheet 35.

DETAILS WEST APPROACH
CEDAR STREET BRIDGE
F.A. RTE. 669 SEC. 103B-I-4(D)
PEORIA TAZEWELL COUNTIES

MTA, INCORPORATED
DESIGNED J.N. CHECKED D.R.B.
DRAWN J.D.W. DATE 12-11-87 NO. 85-12

ROUTE NO.	SECTION	COUNTY	TOTAL SHEETS	SHEET NO.
F.A. 669	103B-1-4	PEORIA TAZEWELL	82	39
FED. ROAD DIST. NO. 7	ILLINOIS	PROJECT		

SHEET 37 OF 70

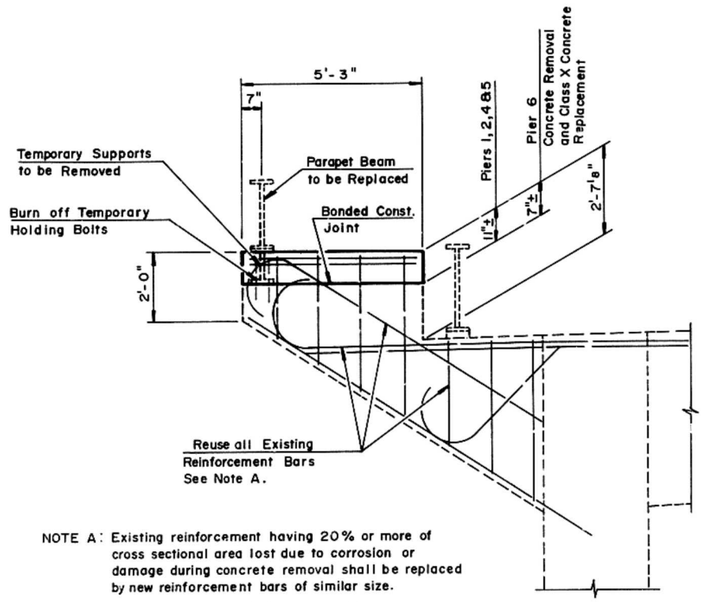

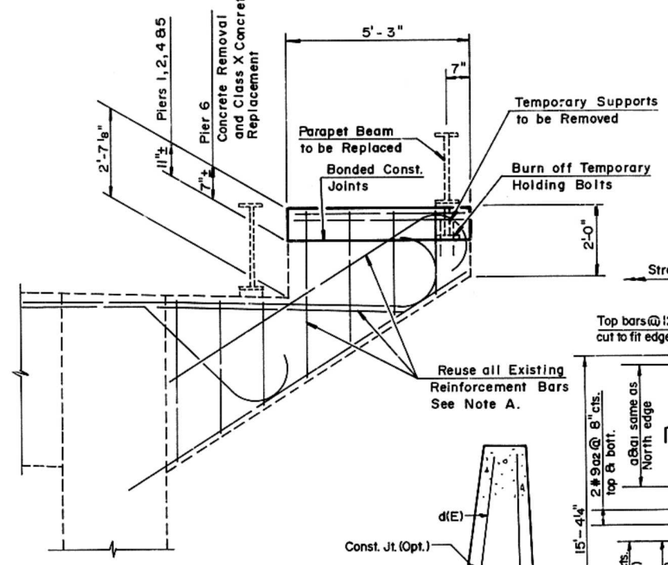

NOTE A: Existing reinforcement having 20% or more of cross sectional area lost due to corrosion or damage during concrete removal shall be replaced by new reinforcement bars of similar size.

Cost of additional reinforcement will be paid for at the contract unit price for Reinforcement Bars.

All Bonded Construction Joints between existing and new concrete shall be in accordance with Art. 504.13(a)(2) of the Standard Specs.

CANTILEVER DETAILS

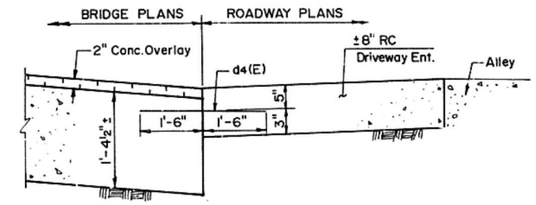

SECTION D-D

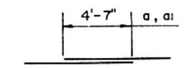

MINIMUM BAR LAP

Bars indicated thus 2x3#5 etc. indicates 2 lines of bars with 3 lengths per line.

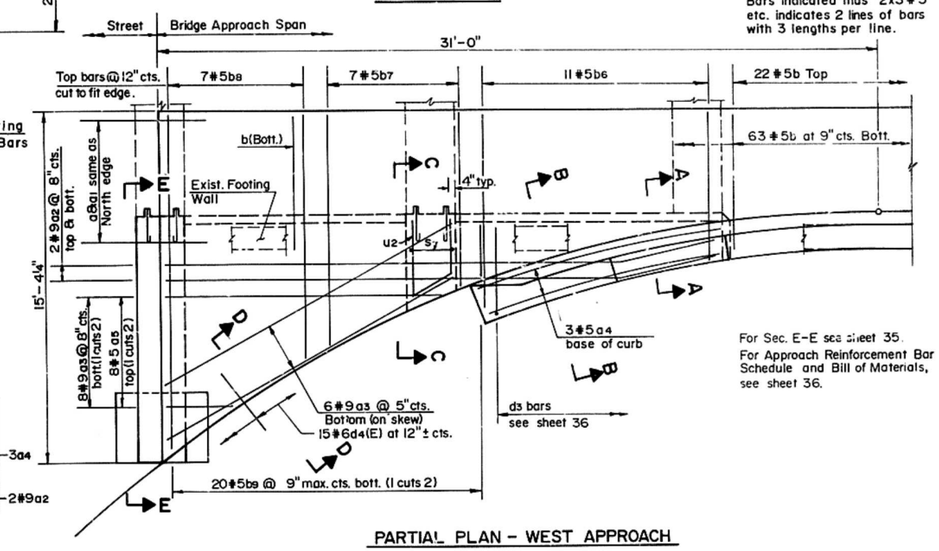

For Sec. E-E see sheet 35.
For Approach Reinforcement Bar Schedule and Bill of Materials, see sheet 36.

PARTIAL PLAN - WEST APPROACH

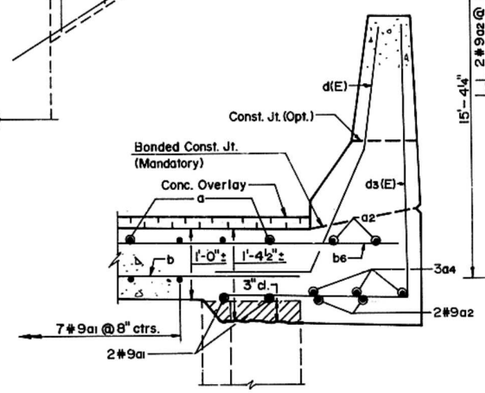

SECTION A-A

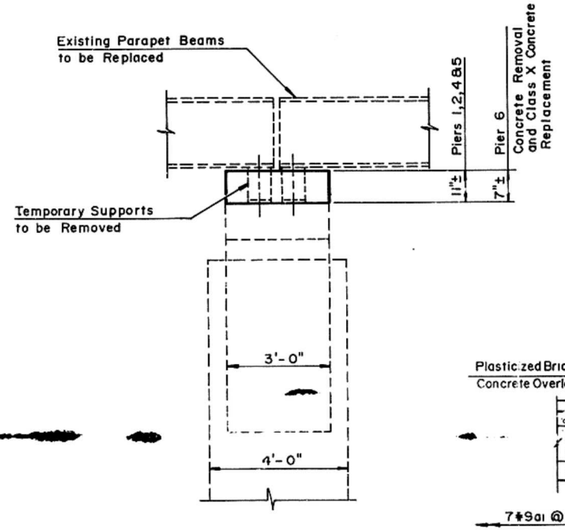

END VIEW

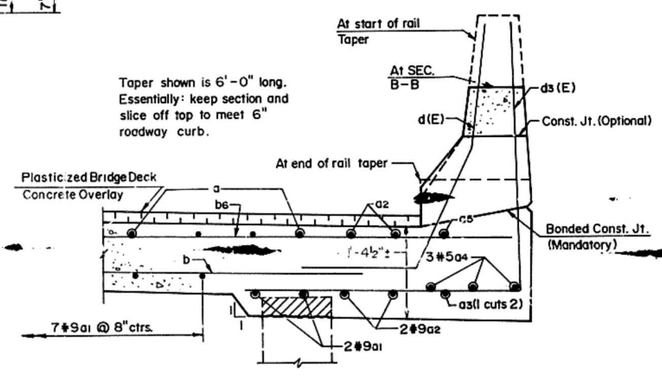

SECTION B-B

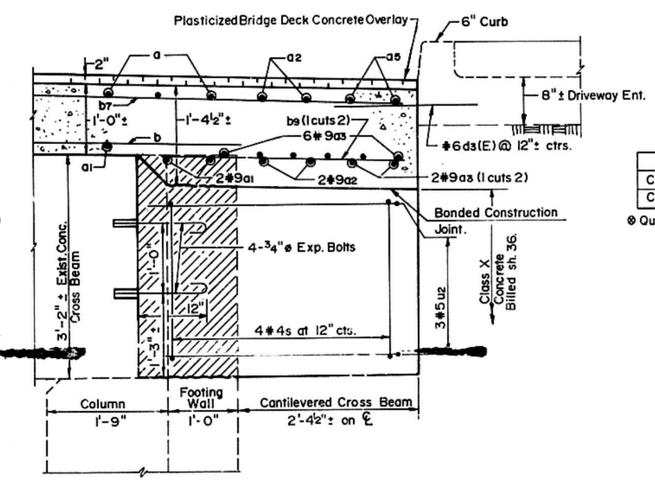

SECTION C-C

Indicates concrete removal

BILL OF MATERIAL - PIERS 1-6⊗

ITEM	UNIT	QUANTITY
Concrete Removal	Cu. Yds.	0.7
Class X Concrete	Cu. Yds.	5.0

⊗ Quantities for restoring Pier Cantilevers at Piers 1,2,4,5 & 6.

WEST APPROACH DETAILS
CANTILEVER COMPLETION
PIERS 1, 2, 4, 5 & 6
CEDAR STREET BRIDGE
F.A. RTE. 669 SEC. 103 B-1-4
PEORIA TAZEWELL COUNTIES

MTA, INCORPORATED

DESIGNED G.B.M. CHECKED J.N.
DRAWN J.H. DATE 12-11-87 NO. 85-12

ROUTE NO	SECTION	COUNTY	TOTAL SHEETS	SHEET NO
F.A.R. 669	⊗	PEORIA TAZEWELL	82	40
FED ROAD DIST NO 7	ILLINOIS	PROJECT ~~THF-669(-)~~		
⊗ 103B-I-4(D)		SHEET 38 OF 70		

△ Reinforcement bars and concrete block at expansion joint are billed on sheet 39.

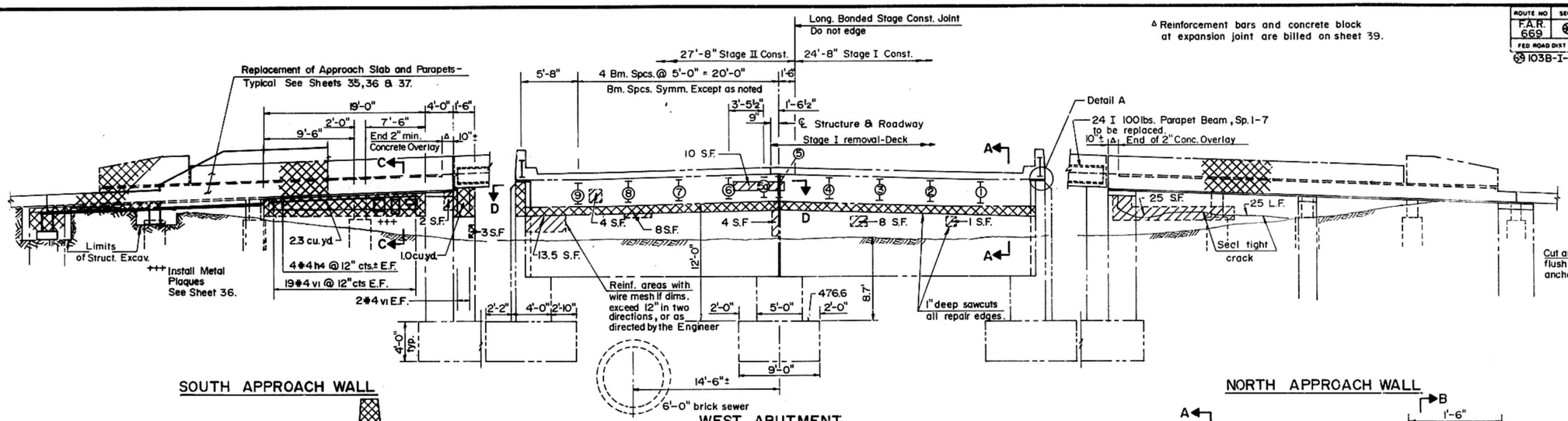

DETAIL A

Existing Parapet Beam Bearing

For replacement bearing see Sheet 31.

SOUTH APPROACH WALL

WEST ABUTMENT

(Looking West)

NORTH APPROACH WALL

Conc. Removal & Formed replacement as indicated, Bill as Conc. Removal & Class X Conc. or Class X Conc. Superstructure

* Formed conc. repair; min. depth 3"; Bill as Conc. Removal & Class X Conc.

Open cracks to [illegible]

* Where removal and [illegible] [illegible]rated concrete on side sur[illegible] [illegible]ercach walls is required t[illegible] [illegible] new conc. where req'd. with[illegible] wire fabric an[illegible] [illegible] means of ¼"/ expan[illegible] [illegible] max. in each directi[illegible] [illegible]sions for Repair Concrete Stru[illegible] [illegible]y item.)

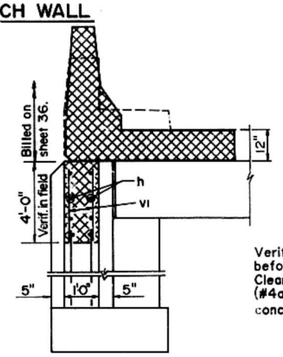

SECTION C-C

Verify wall replacement area before ordering reinforcement. Clean existing reinforcement (#4at18") to provide 1'-6" in new concrete, discard remainder.

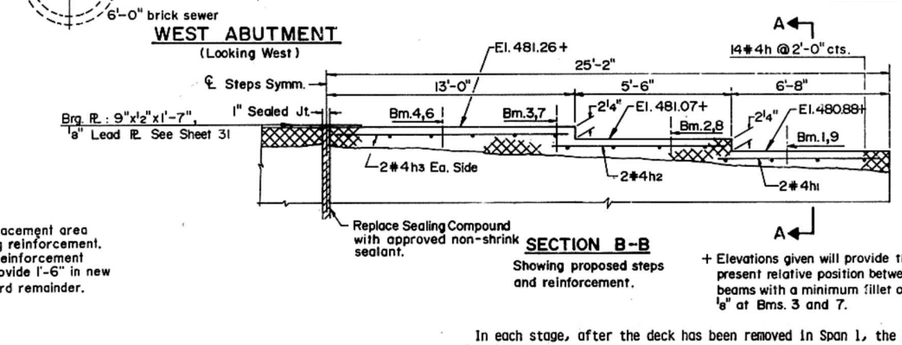

SECTION B-B

Showing proposed steps and reinforcement.

+ Elevations given will provide the present relative position between beams with a minimum fillet of ⅛" at Bms. 3 and 7.

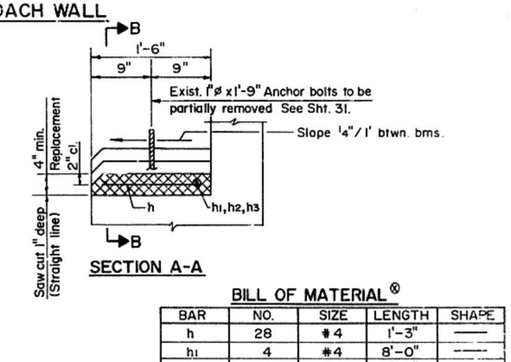

SECTION A-A

In each stage, after the deck has been removed in Span 1, the beams of that stage shall be raised simultaneously and supported in the same relative position during the reconstruction and curing of the abutment bearing seat. Jacking loads at West Abutment: Steel Beams only = 3000 lbs. each; Beam with concrete deck = 15,300 lbs.

The Contractor is responsible for the raising and supporting of beams during bearing seat reconstruction. The Contractor shall submit plans for this operation to the Engineer for approval.

After removal of concrete surfaces to the designated depth plus additional [illegible]se and/or deteriorated concrete, reinforcement extending into removal areas shall be cleaned and incorporated into the new construction. The exposed surfaces of existing concrete and reinforcement bars shall be sandblasted. Formed concrete on Abutment Bearing Seat shall be bonded to existing concrete in accordance with Article 504.13(a)(2). Other formed concrete repairs shall be bonded to existing concrete with a 1:1 sand cement grout see Special Provisions. The cost of formed concrete surface repairs is billed as Concrete Removal and Class X Concrete.

BILL OF MATERIAL ⊗

BAR	NO.	SIZE	LENGTH	SHAPE
h	28	#4	1'-3"	——
h1	4	#4	8'-0"	——
h2	4	#4	7'-0"	——
h3	4	#4	12'-6"	——
h4	8	#4	18'-6"	——
v1	42	#4	3'-3"	——

ITEM	UNIT	QUANTITY
Concrete Removal	Cu. Yd.	5.3
Class X Concrete	Cu. Yd.	5.3
Reinforcement Bars	Lbs.	290
Epoxy Crack Sealing	Lin. Ft.	25
Jacking and Cribbing	L.S.	One

⊗ Repairs to bearing seat and approach walls.

Note:

Existing reinforcement having 20% or more of cross sectional area lost due to corrosion or damage during concrete removal shall be replaced by new reinf. bar lapped as shown or noted.

Cost of additional reinforcement will be paid for at the contract unit price for Reinforcement Bars.

CONCRETE REPAIR LAP DIMENSIONS	
Bar Size	Bar Length
#4	1'-3"
#5	1'-7"

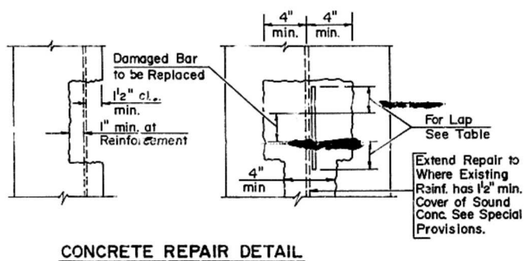

CONCRETE REPAIR DETAIL

Note All repair dimensions are approximate

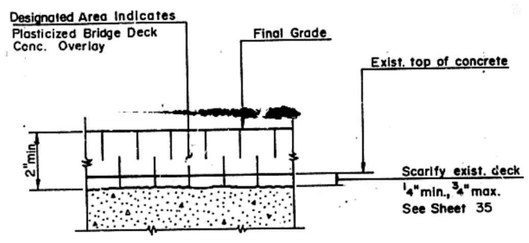

SECTION X-X

WEST ABUTMENT
CEDAR STREET BRIDGE
F.A. RTE. 669 SEC. 103B-I-4(D)
PEORIA TAZEWELL COUNTIES

MTA, INCORPORATED

DESIGNED J.N. CHECKED J.N.
DRAWN R.H.H. DATE 12-11-87 NO. 85-12

ROUTE NO.	SECTION	COUNTY	TOTAL SHEETS	SHEET NO.
F.A.669	⊗	PEORIA TAZEWELL	82	41
FED. ROAD DIST. NO. 7	ILLINOIS	PROJECT		

⊗ 103B-I-4(D) SHEET 39 OF 70

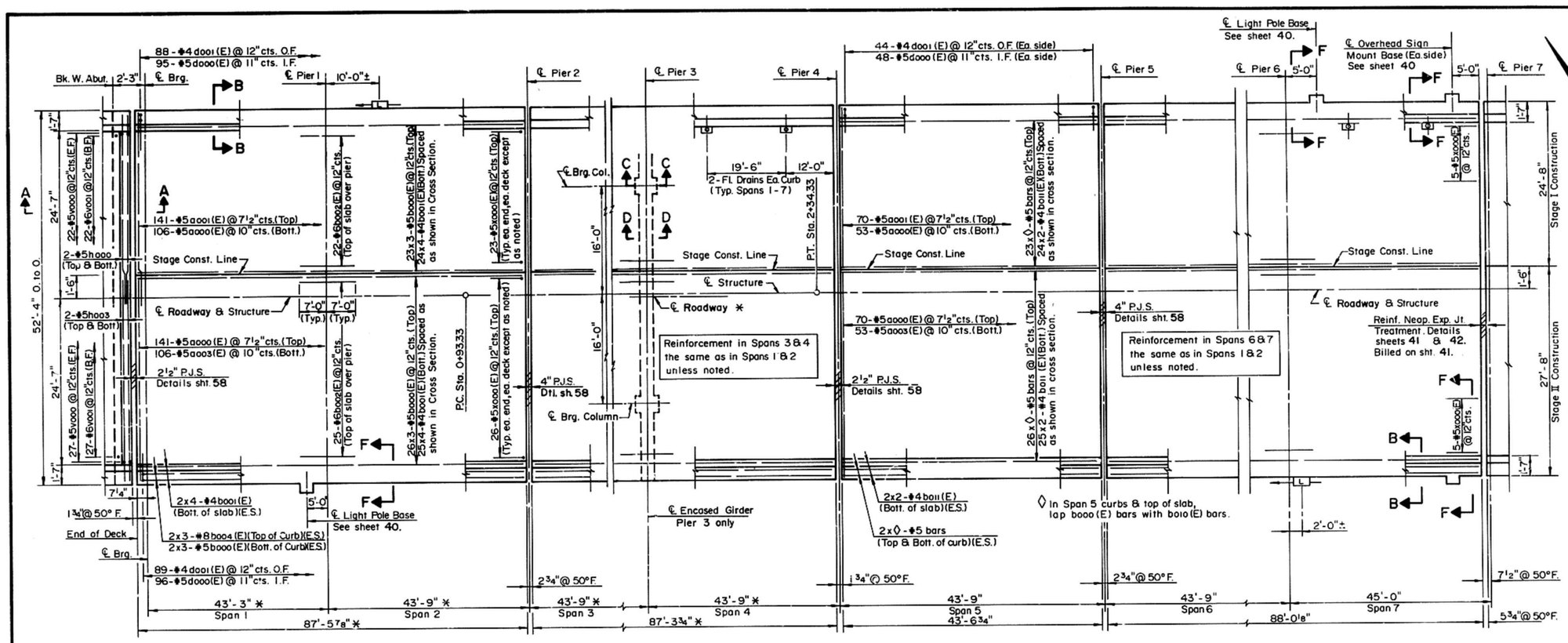

* ℄ Roadway in Spans 1-4 is on a 2°+ horizontal curve. For dimensions along faces of curb, see parapet elevations on sheet 40.

PLAN

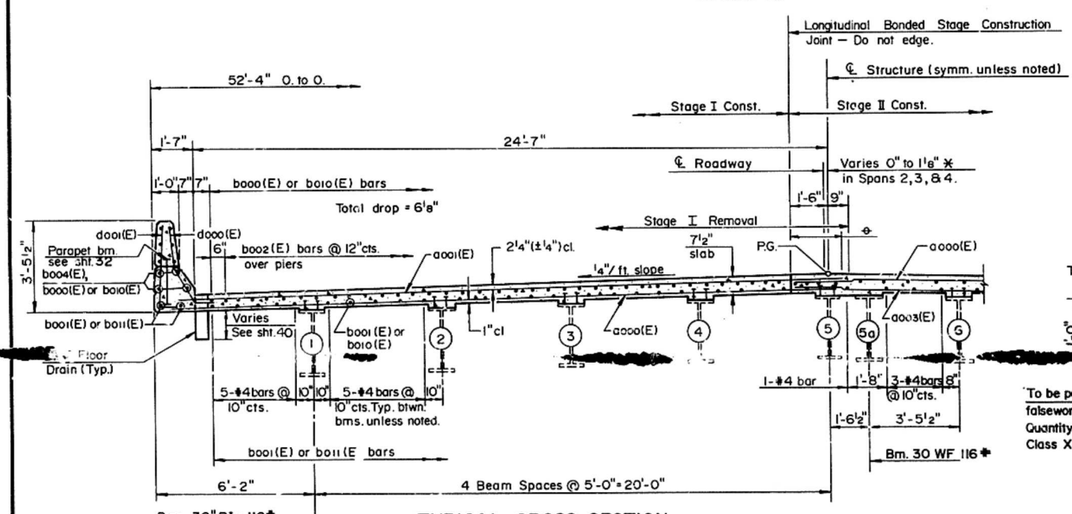

TYPICAL CROSS SECTION

(See Sheet 52)

✚ Lapped bars in this location shall be tied with double the number of ties normally used.

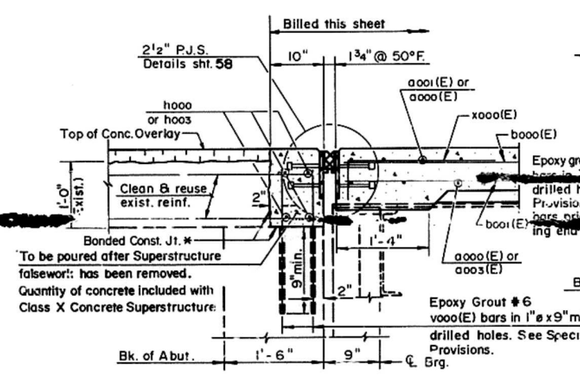

PROP. SEC. A-A

* In accordance with Art. 504.13(a)(2) of the Standard Specs.

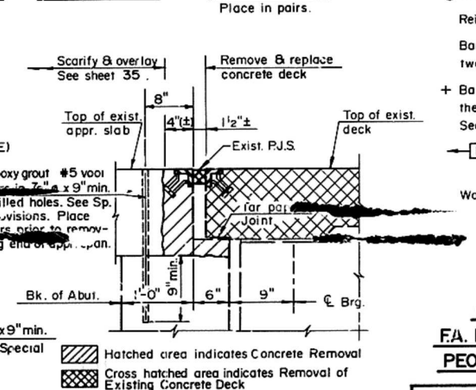

EXIST. SEC. A-A

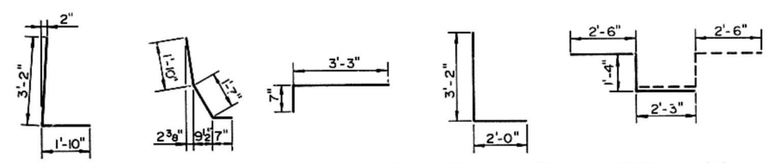

1'-8"	b001(E), b011(E)
2'-2"	b000(E)
2'-5"	e000(E), e001(E), e002(E)
6'-4"	b004(E)

MINIMUM BAR LAP

BILL OF MATERIAL ①

BAR	NO.	SIZE	LENGTH	SHAPE
a000(E)	864	#5	26'-8"	—
a001(E)	493	#5	26'-0"	—
a003(E)	371	#5	27'-5"	—
b000(E)	534	#5	30'-9"	—
b001(E)	636	#4	23'-3"	—
b002(E)	141	#6	14'-0"	—
b004(E)	36	#8	33' 6"	—
b010(E)	53	#5	14'-9"	—
b011(E)	106	#4	22'-6"	—
c000(E)	669	#5	4'-0"	⌊
d001(E)	619	#4	5'-0"	∠
+ d002(E)	48	#6	6'-1"	⊔
+ d003(E)	12	#6	5'-2"	L
e000(E)	60	#4	23'-0"	—
e001(E)	72	#4	23'-3"	—
e002(E)	36	#4	22'-9"	—
h000	4	#5	26'-8"	—
h003	4	#5	27'-5"	—
v000	98	#6	2'-0"	—
v001	49	#5	2'-3"	—
x000(E)	353	#5	3'-10"	⌐
Structural Steel			Lbs.	7,920
Class X Conc. Superstr.			Cu.Yd.	44.59
Reinf. Bars (Epoxy Coated)			Lbs.	93,000
Reinforcement Bars			Lbs.	640
Preformed Jt. Seal (2½")			Lin.Ft.	104
Preformed Jt. Seal (4")			Lin.Ft.	104
Floor Drains			Each	28

For Sec. B-B, C-C, D-D, & F-F see sheet 40.

For Floor Drain details, see sheet 44.

① Includes quantities for parapets.

Reinf. bars designated (E) shall be epoxy coated.

Bars indicated thus, 2 x 3-#5 etc., indicates two lines of bars with three lengths per line.

+ Bars d002(E) and d003(E) are included in the Light Pole & Overhead Sign bases. See sheet 40.

—⊔— For Pull / Junction Box notes, see sheet 46.

Work this sheet with sheet 40.

PLAN SPANS 1-7
CEDAR STREET BRIDGE
F.A. RTE. 669 SEC. 103B-I-4(D)
PEORIA TAZEWELL COUNTIES

MTA, INCORPORATED

DESIGNED P.B.L. CHECKED J.N.
DRAWN D.D.R. DATE 12-11-87 NO. 85-12

ROUTE NO	SECTION	COUNTY	TOTAL SHEETS	SHEET NO
F.A.669	⊗	PEORIA TAZEWELL	82	42
FED ROAD DIST NO 7	ILLINOIS	PROJECT ~~SHF-669(...)~~		
⊗ 103B-1-4(D)		SHEET 40 OF 70		

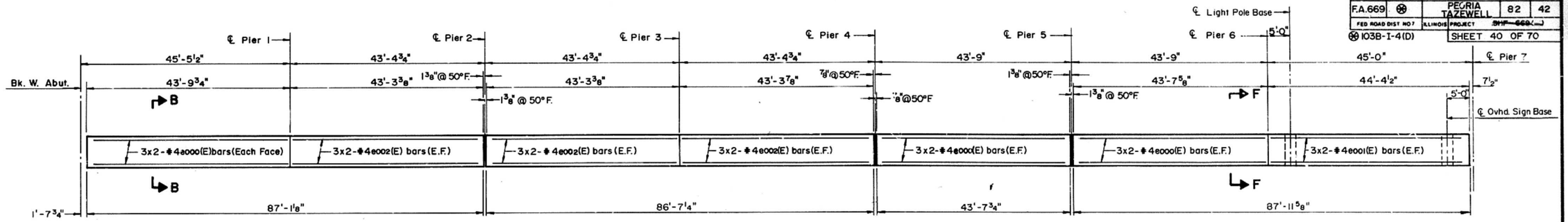

NORTH PARAPET
(Inside Face)

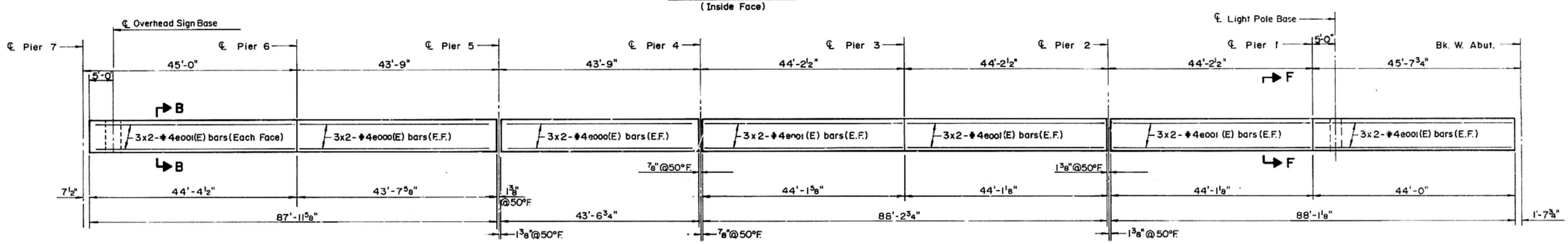

SOUTH PARAPET
(Inside Face)

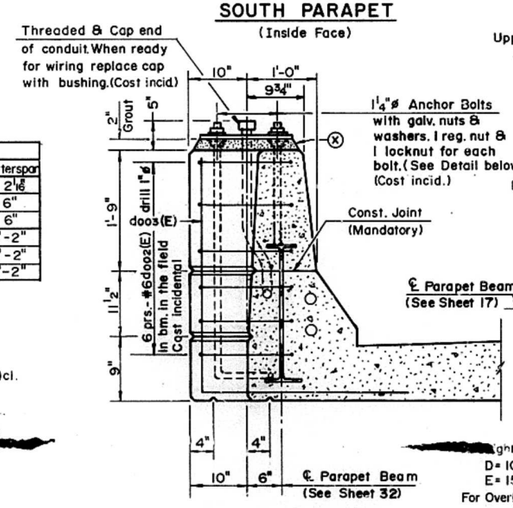

SECTION F-F

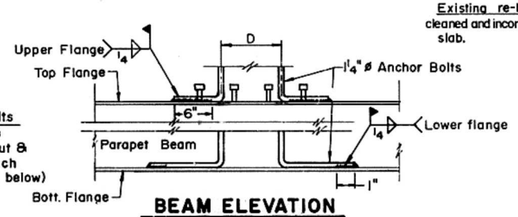

BEAM ELEVATION
Anchor bolt connection to Parapet Bm.

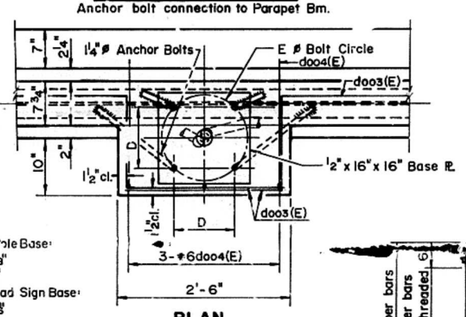

PLAN

Light Pole Base:
D = 10⅝"
E = 15"
For Overhead Sign Base:
D = 11⅜"
E = 16"

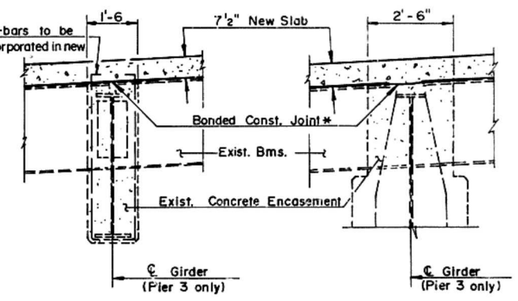

SEC. D-D

SEC. C-C

* Bonded Cons. Jt. in accordance with Art. 504.13(a)(2) of the Standard Specs.

For Parapet Joint details, see sheet 54.
For parapet reinforcement schedule see sheet 39.
For Parapet Beam see sheet 32.

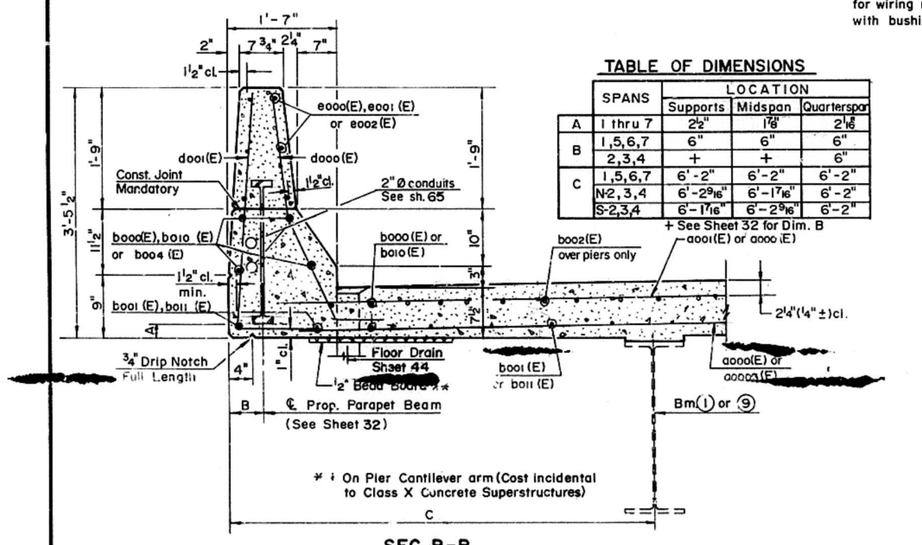

* ‡ On Pier Cantilever arm (Cost incidental to Class X Concrete Superstructures)

SEC. B-B
PROP. TYP. SEC. THRU PARAPET
(SPANS 1 THRU 7)

TABLE OF DIMENSIONS

	SPANS	LOCATION		
		Supports	Midspan	Quarterspan
A	1 thru 7	2½"	1⅞"	2 1/16"
B	1,5,6,7	6"	6"	6"
	2,3,4	+	+	6"
C	1,5,6,7	6'-2"	6'-2"	6'-2"
	N-2,3,4	6'-2 9/16"	6'-1 7/16"	6'-2"
	S-2,3,4	6'-1 7/16"	6'-2 9/16"	6'-2"

+ See Sheet 32 for Dim. B

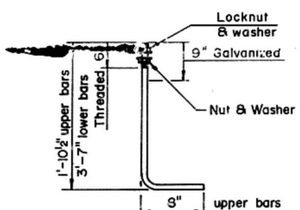

1¼"ø ANCHOR BOLT

LIGHT POLE & OVERHEAD SIGN BASE DETAILS

⊗ Grout Mixture shall consist of 1 part sand, 1 part cement & 1 part chips (pea gravel). The grout shall contain water for a 1" slump. Cost incidental to Light Standard.

PARAPET DETAILS - SPANS 1 THRU 7
CEDAR STREET BRIDGE
F.A. RTE. 669 SEC. 103B-1-4(D)
PEORIA TAZEWELL COUNTIES

MTA, INCORPORATED

DESIGNED P.B.L. CHECKED J.N.
DRAWN R.H.H. DATE 12-11-87 NO. 85-12

ROUTE NO.	SECTION	COUNTY	TOTAL SHEETS	SHEET NO.
FA669	⊗	PEORIA TAZEWELL	82	43
FED. ROAD DIST. NO. 7		ILLINOIS	PROJECT: BHF-6001(--)	

⊗ 1038-I-4(D) SHEET 41 OF 70

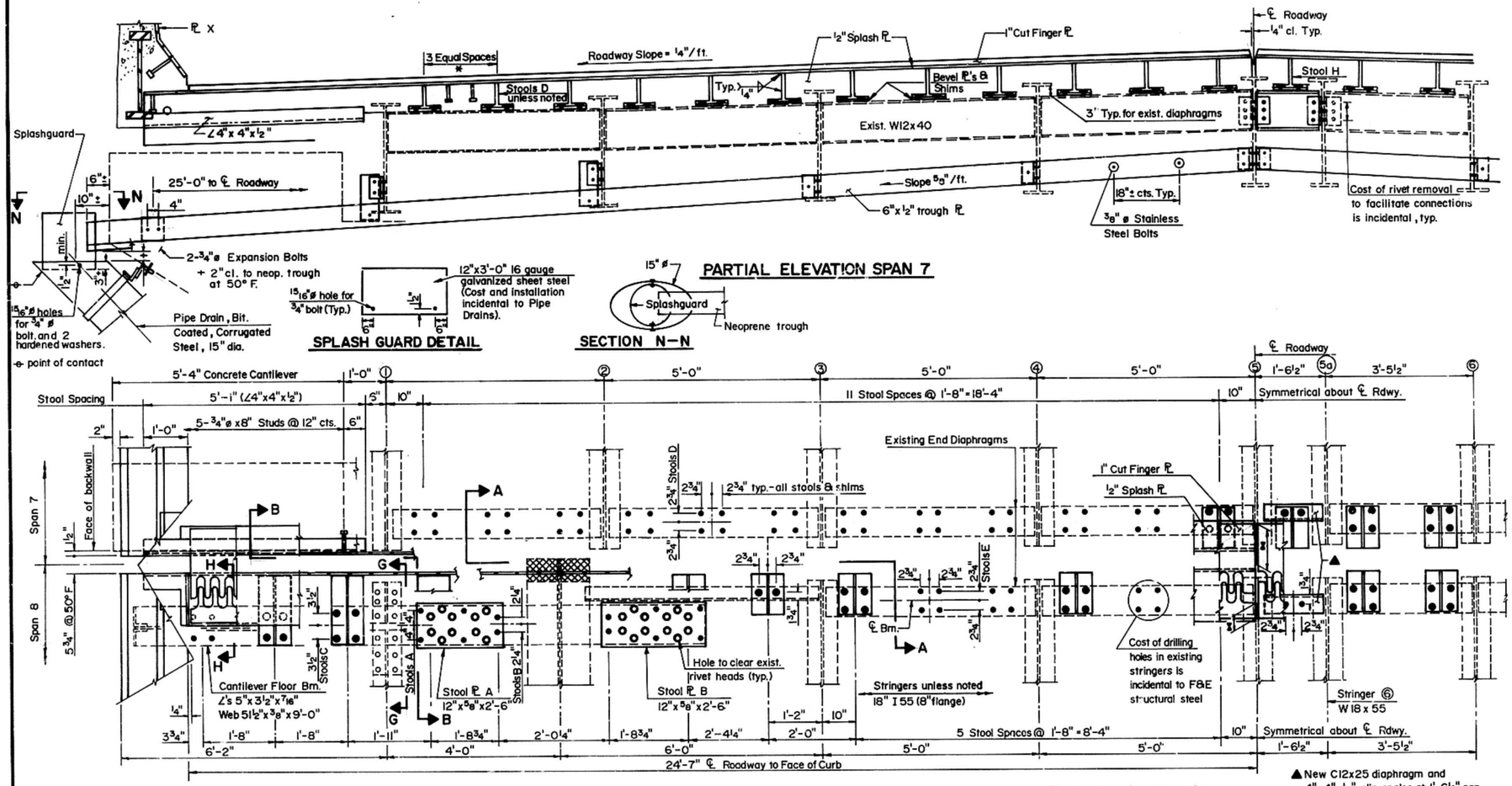

PARTIAL ELEVATION SPAN 7

SPLASH GUARD DETAIL

SECTION N-N

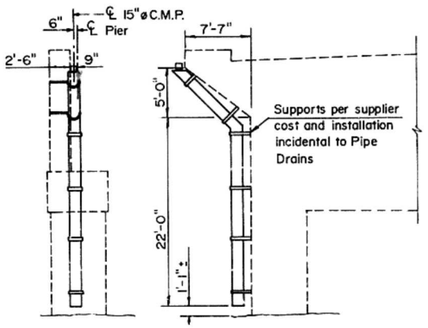

COLLECTION SYSTEM

Each End

HALF PLAN

▲ New C12x25 diaphragm and 4"x4"x1/2" clip angles at 1'-6 1/2" gap 15/16" ø holes for 3/4" ø H.S. bolts with 2 hardened washers. (Span 7 & Span 8)

Limits of complete penetration groove weld.

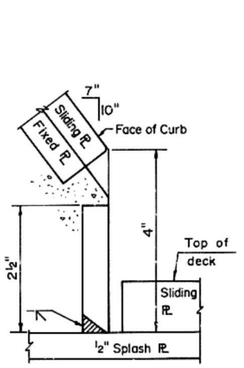

DETAIL A (Sliding Plate)

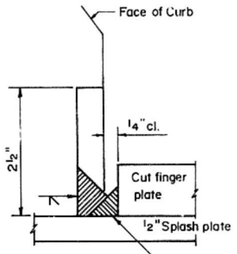

DETAIL A (Fixed Plate)

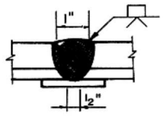

DETAIL B

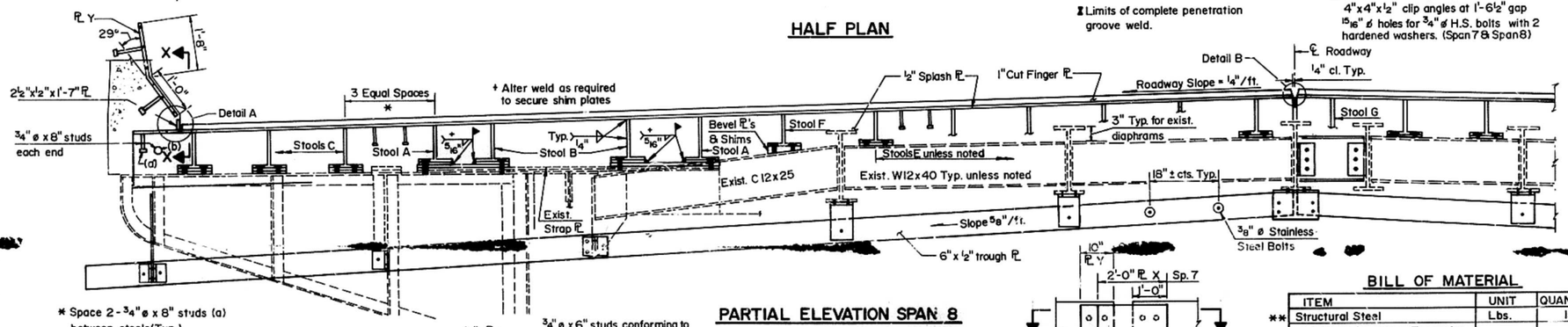

* Space 2-3/4"ø x 8" studs (a) between stools (Typ.)

PARTIAL ELEVATION SPAN 8

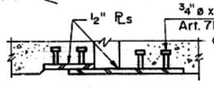

SECTION Y-Y

For Sec. A-A, B-B, G-G & H-H See Sheet 25B

● Bent Parapet PLs
Pier 7-2pr. Reqd.
PL X = 24"x1/2"x2'-6"
PL Y = 10"x1/2"x2'-8"
4-3/4"ø x 6" Studs Ea. PL

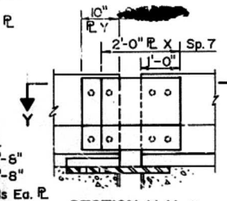

SECTION X-X ●

BILL OF MATERIAL

	ITEM	UNIT	QUANTITY
**	Structural Steel	Lbs.	15,400
***	Reinforced Neoprene Expansion Joint Treatment	Lin.Ft.	52
	Cutting Structural Steel	Lin.Ft.	4
	Pipe Drains, Bituminous Coated Corrugated Steel 15"	Lin.Ft.	60

** Includes all plates, stools, studs, angles, diaphrams and bolts, see sp. prov.
*** Includes elastomeric neoprene mat and trough

PIER 7
REINFORCED NEOPRENE JOINT
CEDAR STREET BRIDGE
F.A. RTE. 669 SEC. 1038-I-4(D)
PEORIA-TAZEWELL COUNTIES

MTA, INCORPORATED

DESIGNED G.B.M.	CHECKED J.N.	
DRAWN J.D.W.	DATE 12-11-87	NO. 85-12

ROUTE NO.	SECTION	COUNTY	TOTAL SHEETS	SHEET NO.
F.A.669	103B-I-4(D)	PEORIA TAZEWELL	82	44
FED. ROAD DIST. NO. 7	ILLINOIS	PROJECT ~~BHF-669(...)~~		

SHEET 42 OF 70

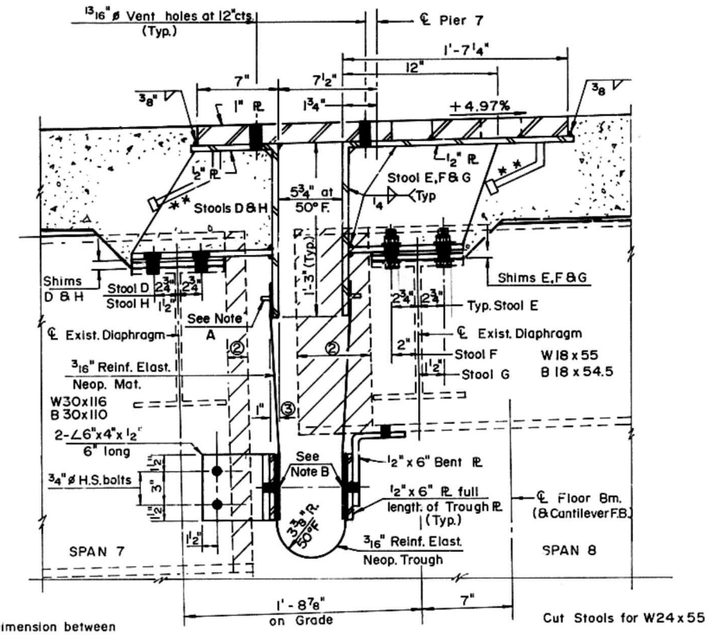

③ Dimension between plumb lines. Typ.

SECTION A-A

Note A: 3/8"ø Studs at 18"cts. w/ washer & nut. Auto. end weld. Provide brass grommet in mat.

Note B: 3/8"ø Stainless Stl. bolts w/ washer & nut. Provide brass grommet in trough.

** 3/4"ø x 8" Granular or Solid flux filled headed studs conforming to Art. 710.38 of Std. Specs. Auto. End weld.

⊕ One-¼" Norminal Shim plus One-⅛" shim & One-1/16" shim for height adjustment. Typ. at all Stools.

① Cutting Note: Cutting Structural Steel includes removal of the ends of two girders; 2 - Flange ∠s 8"x8"x¾"; ½" Web PL; 2 - Side PLs 16"x¾"; 2 - Brg. Stiff. ∠s 4"x6"x⅝"; 4 - 18"x¾" & 2 - End Stiff. ∠s 4"x6"x⅝".

② Ends of stringers and beams interfering with installation shall be removed. Quantities are not included in Bill Of Material. To be paid for at unit price for Cutting Structural Steel.

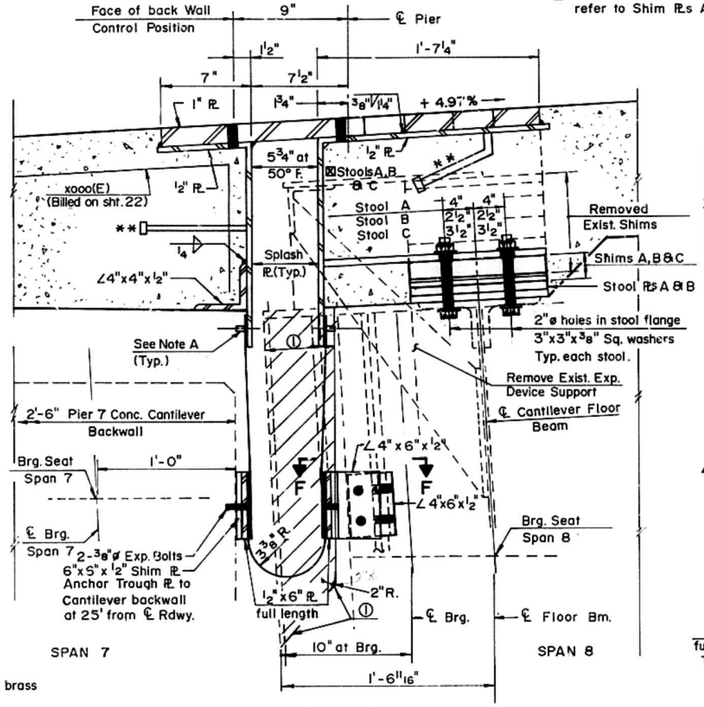

SECTION B-B

⊠ Stools A&B: 2"ø holes one side - refer to Shim PLs A&B.

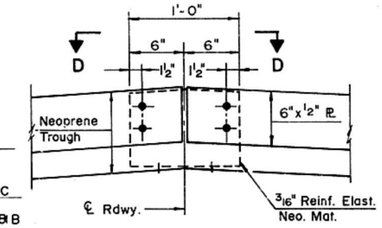

TROUGH SPLICE DETAIL AT ℄ ROADWAY

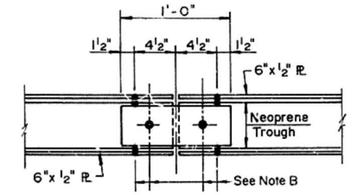

VIEW D-D

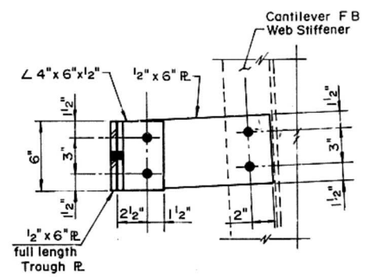

SECTION G-G

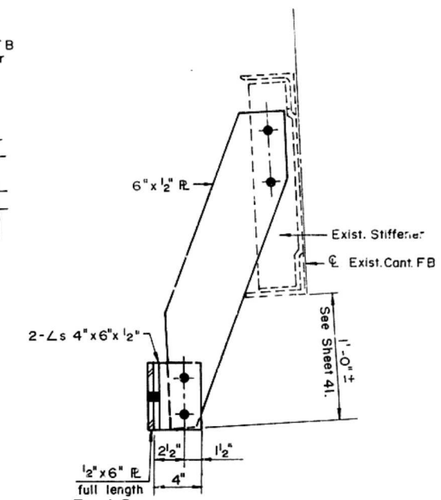

SECTION H-H

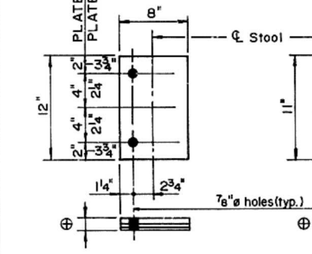

PLAN SHIMS A&B

4 - A ; 4 - B Req'd.

PLAN SHIM C

6 Req'd.

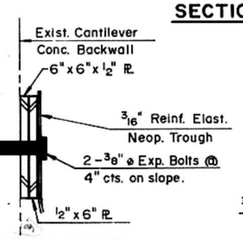

ANCHOR DETAIL

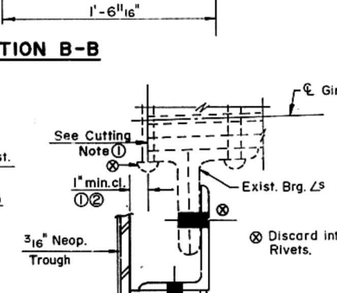

VIEW F-F

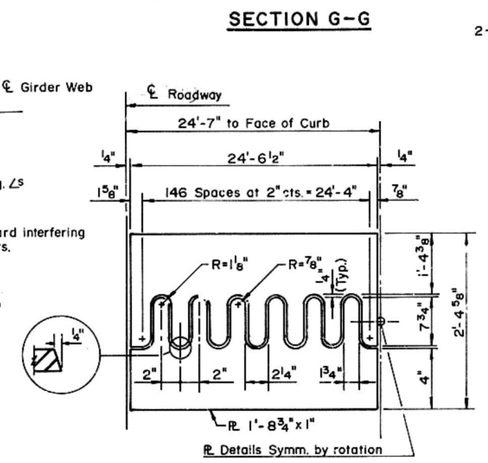

FLAME CUT PLATE

Plate shall be match marked

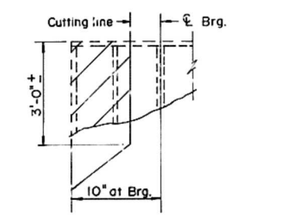

① CUTTING DETAIL

Span 8 Girder

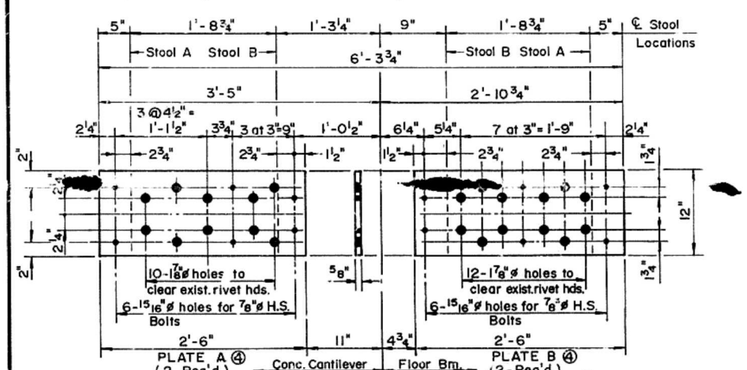

STOOL PLATE DETAIL

④ Confirm rivet locations in field before drilling Plates A & B.

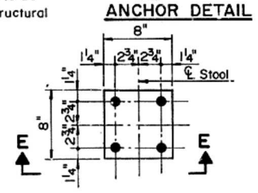

PLAN SHIMS D&E

34 Req'd.

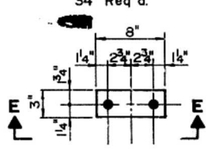

PLAN SHIMS F,G&H

4 Req'd.

Shim Bevel to be determined from slope of End Diaphragms.

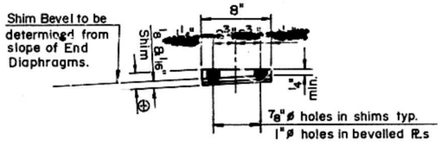

VIEW E-E

NOTES:

For Bill of Material, see sht. 41

Use 3/4"ø High Strength Bolts except as noted.

Work this sheet with sheet 41.

PIER 7 JOINT DETAILS
CEDAR STREET BRIDGE
F.A. RTE. 669 SEC. 103B-I-4(D)
PEORIA-TAZEWELL COUNTIES

MTA, INCORPORATED

DESIGNED G.B.M. CHECKED J.N.

DRAWN R.H.H. DATE 12-11-67 NO. 85-12

ROUTE NO.	SECTION	COUNTY	TOTAL SHEETS	SHEET NO.
FA.669	⊗	PEORIA TAZEWELL	82	45
FED. ROAD DIST. NO. 7		ILLINOIS	PROJECT	SHP-[illegible]

⊗103B-I-4(D) SHEET 43 OF 70

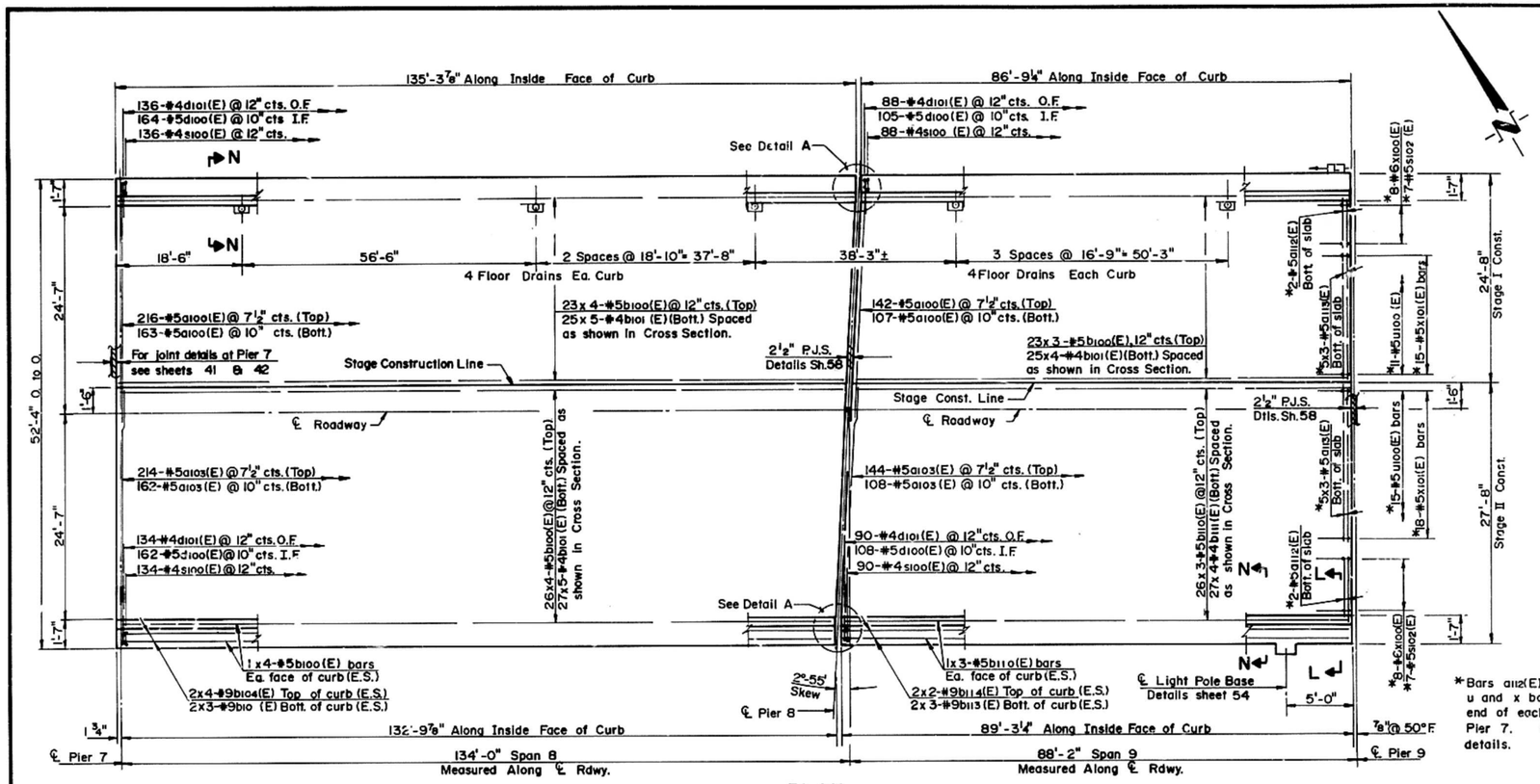

PLAN

*Bars a112(E), a113(E), s102(E), u and x bars, typical at each end of each deck except at Pier 7. See sheet 59 for details.

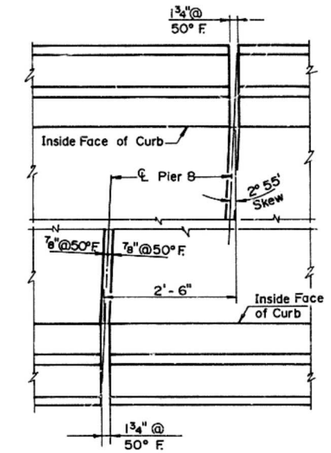

DETAIL A

1'-8"	b101(E) or b111(E)
2'-2"	b100(E) or b110(E)
5'-9"	b103(E) or b113(E)
8'-1"	b104(E) or b114(E)

MINIMUM BAR LAP

BILL OF MATERIAL ①

	BAR	NO.	SIZE	LENGTH	SHAPE
	a100(E)	628	#5	26'-8"	—
	a103 (E)	628	#5	27'-5"	—
	a112 (E)	12	#5	7'-6"	—
	a113 (E)	90	#5	4'-8"	—
	b100(E)	212	#5	35'-5"	—
	b101(E)	260	#4	28'-4"	—
	b103(E)	12	#9	48'-11"	—
	b104(E)	16	#9	39'-11"	—
	b110 (E	159	#5	31'-2"	—
	b111(E)	208	#4	23'-6"	—
	b113(E)	12	#9	33'-6"	—
	b114(E)	8	#9	48'-8"	—
	d100(E)	539	#5	4'-0"	L
	d101 (E)	448	#4	2'-9"	—
+	d102(E)	6	#6	8'-11"	⊔
+	d103(E)	3	#6	5'-2"	L
	e100(E)	72	#4	18'-6"	—
	e101(E)	42	#4	16'-9"	—
	e102(E)	12	#4	20'-3"	—
	e103(E)	18	#4	19'-0"	—
	s100 (E)	448	#4	5'-3"	□
	s102(E)	42	#5	4'-11"	◿
	u100(E)	78	#5	4'-9"	U
	x100(E)	48	#6	5'-5"	⊐
	x101 (E)	99	#5	4'-11"	⊐
	Structural Steel			Lbs.	3,960
	Class X Concrete Superstr.			Cu.Yds.	342.0
	Reinf. Bars (Epoxy Coated)			Lbs.	72,000
	Preformed Jt. Seal (2½")			Lin. Ft.	104
	Shear Stud Connectors **			Each	192
	Floor Drains			Each	16

Reinforcement bars indicated thus; 2x9-#9 etc., indicates two lines of bars with nine bars per line.

Reinforcement bars designated (E) shall be epoxy coated.

① Includes quantities for parapets on spans 8 & 9. See sheet 44 for details.

+ Bars d10 (E) and d10 (E) are included in the Light Pole Base. See sheet 54.

** Shear studs on stringers are not included, see Sheet 33

For floor drain details, see sheet 44
For Sec. L-L, see sheet 54
For Sec. N-N, see sheet 47.
L For Pull/Junction Box notes, see sheet 46.

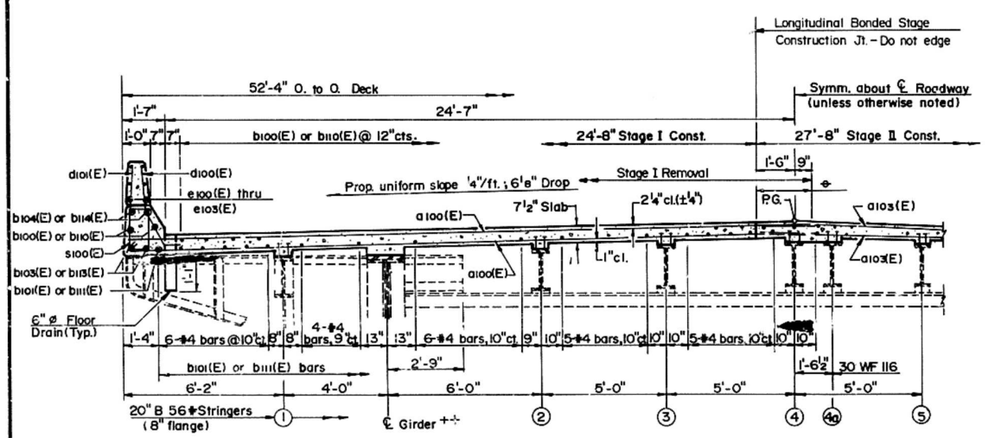

TYPICAL CROSS SECTION
Spans 8 & 9
(See Sheet 52)

+ + Span 8 - 1'-6" Flange
Span 9 - 1'-0½" Flange

◆ See note sheet 39

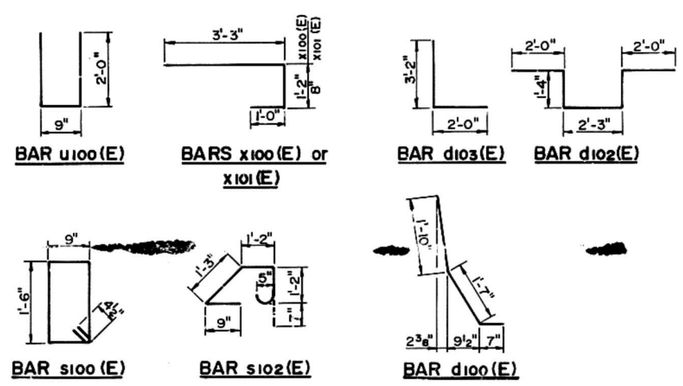

PLAN SPANS 8 & 9
CEDAR STREET BRIDGE
F.A. RTE. 669 SEC. 103-1-4(D)
PEORIA TAZEWELL COUNTIES

MTA, INCORPORATED

DESIGNED P.B.L. CHECKED J.N.
DRAWN C.S.L. DATE 12-11-87 NO. 85-12

ROUTE NO	SECTION	COUNTY	TOTAL SHEETS	SHEET NO
F.A.669	(103B-I-4(D))	PEORIA TAZEWELL	82	46
FED ROAD DIST NO 7	ILLINOIS	PROJECT		

SHEET 44 OF 70

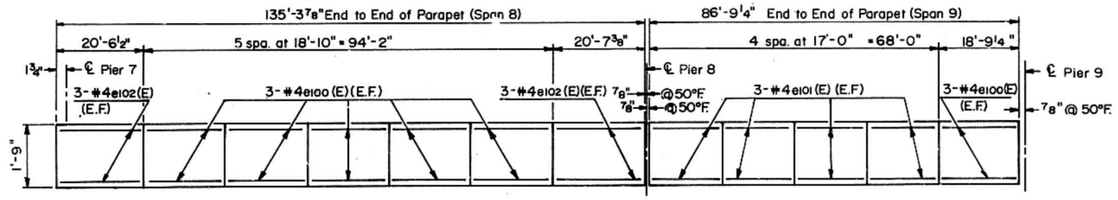

NORTH PARAPET
(Inside Face)

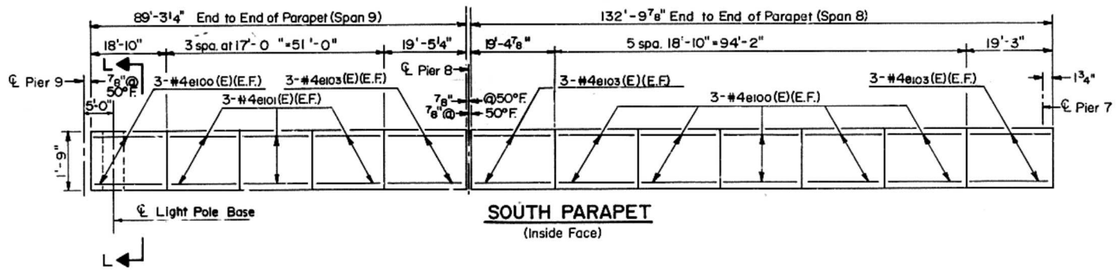

SOUTH PARAPET
(Inside Face)

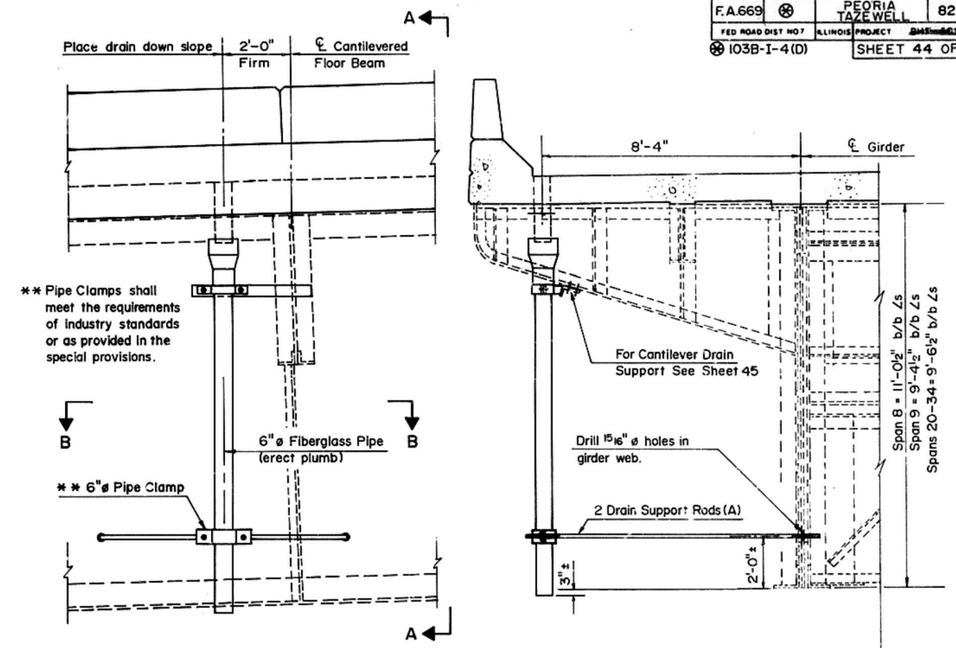

DECK DRAIN EXTENSION

SECTION A-A

Total Deck Drain Extension Required = 85

FLOOR DRAIN LENGTHS

SPANS	DIMEN. L	NO. REQ'D.
1 & 2	1'-0"	8
3-7	2'-0"	20
8-34	1'-1"	221

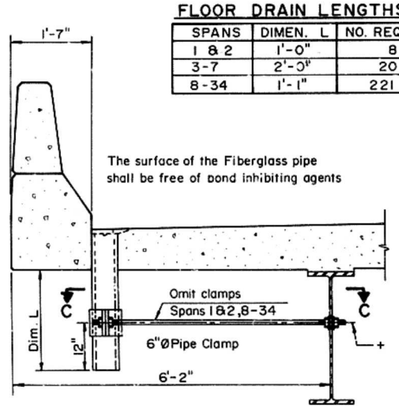

FLOOR DRAIN SECTION AT PARAPET

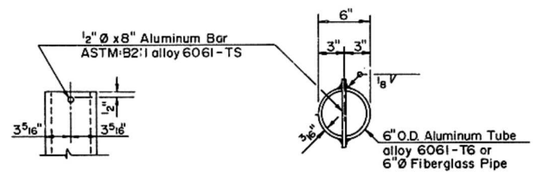

FIBERGLASS PIPE

TOP PLAN
(Showing Aluminum Tube)

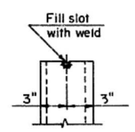

ALUMINUM TUBE

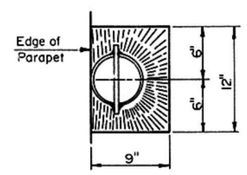

TOP PLAN

FLOOR DRAIN

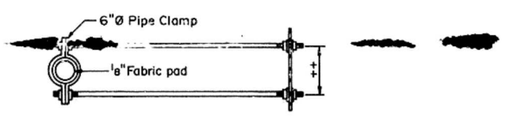

SECTION C-C
+ + Dimension as req'd by Pipe Clamp

NOTE:
Fiberglass pipe shall conform to ASTM: D2996, with short-time rupture strength hoop tensile stress of 30,000 p.s.i. minimum.

The exterior surfaces of the Floor Drain shall be painted with the painting specified for Structural Steel.

+ ℄ ¾"Ø x 4'-10" (Min.) Steel Stud Rod (M164) threads 6" each end with 2 washers & locknuts.
15/16"Ø holes in web, drill in field.

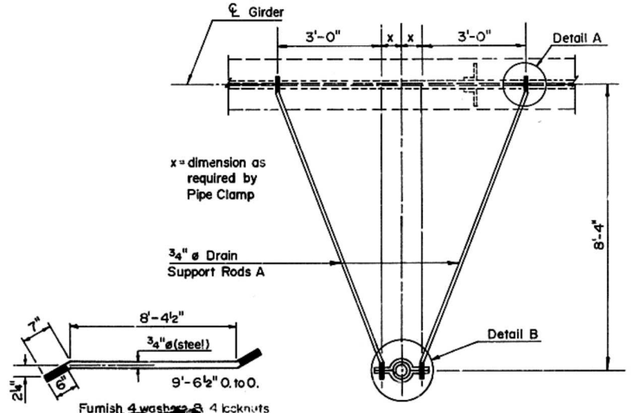

DRAIN SUPPORT RODS A

SECTION B-B

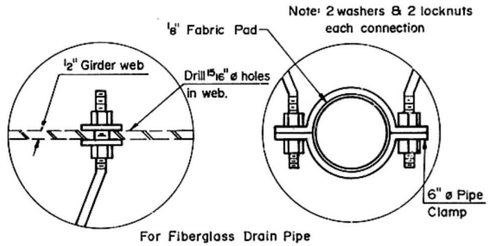

For Fiberglass Drain Pipe notes and additional details see this sheet.

DETAIL A

DETAIL B

BILL OF MATERIAL

ITEM	UNIT	QUANTITY
* Deck Drain Extension	Lump Sum	One

* See Note A.

NOTE A
The Lump Sum price for Deck Drain Extension includes the furnishing and installation of 6"ø Fiberglass Drain Pipe and appurtenances. The Support and Bracing System shown on shts. 44 & 45 may be modified by the Contractor subject to the approval of the Engineer.

For Section L-L and parapet joint details see sheet 54.

PARAPETS, DETAILS - SPANS 8 & 9
DECK DRAIN EXTN'S.-GIRDERS
CEDAR STREET BRIDGE
F.A. RTE. 669 SEC. 103B-I-4(D)
PEORIA TAZEWELL COUNTIES

MTA, INCORPORATED
DESIGNED P.B.L. CHECKED J.N.
DRAWN D.D.R., S.W.S. DATE 12-11-87 NO. 85-12

ROUTE NO	SECTION	COUNTY	TOTAL SHEETS	SHEET NO
FA.669	⊗	PEORIA TAZEWELL	82	47
FED ROAD DIST NO 7	ILLINOIS	PROJECT ~~BHF-660-1~~		
⊗103B-I-4(D)		SHEET 45 OF 70		

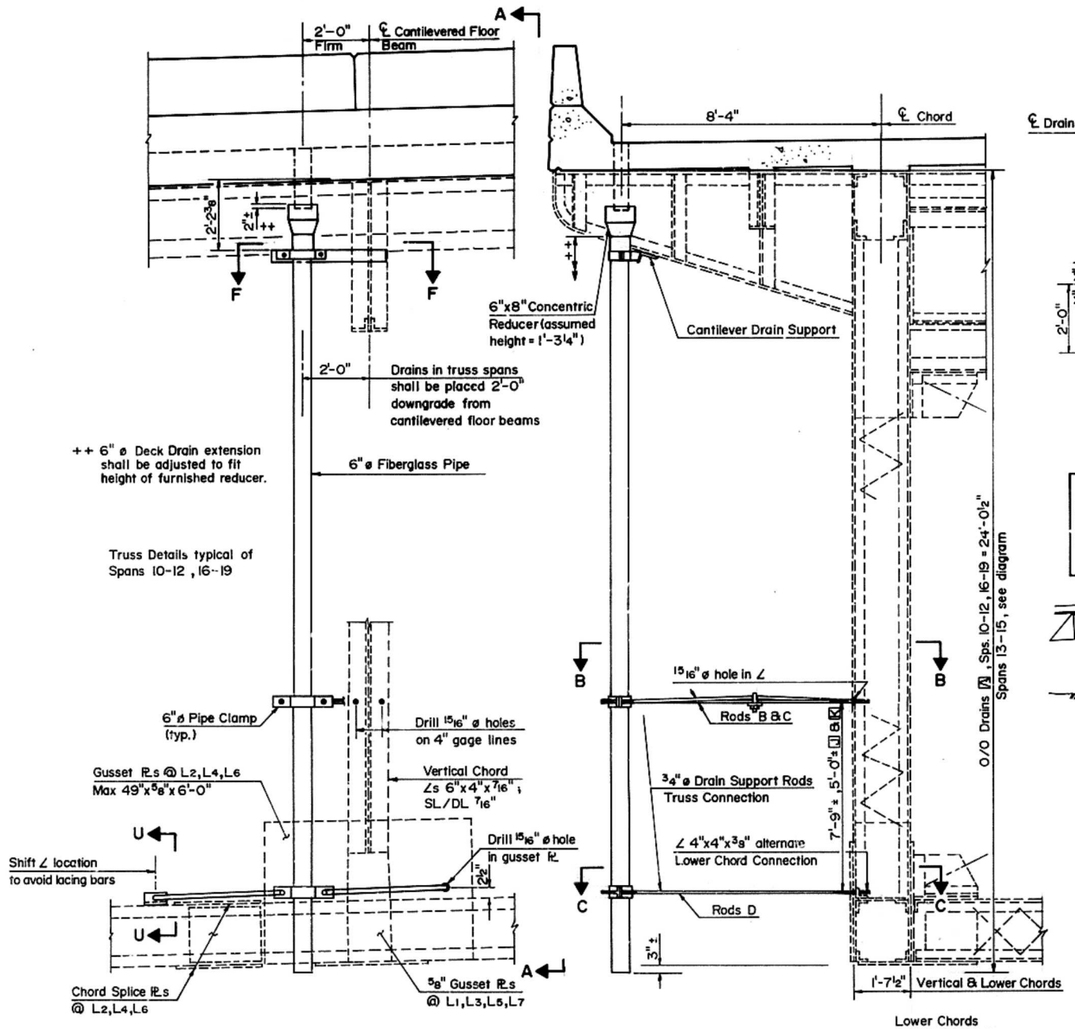

TRUSS CONNECTIONS
ELEVATION - DECK DRAIN EXTENSIONS

SECTION A-A

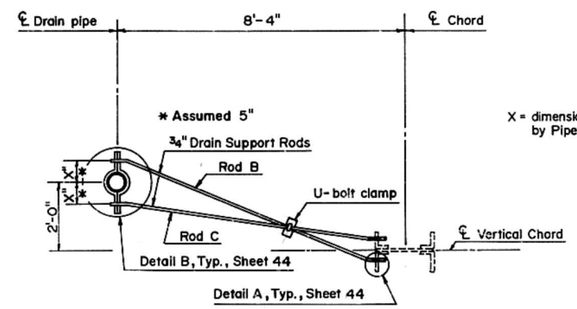

X = dimension as reqd. by Pipe Clamp

SECTION B-B

A	23'-11½"	E	33'-6"	I	19'-5½"
B	24'-10½"	F	37'-8½"	J	16'-6½"
C	25'-10½"	G	28'-10½"	K	14'-8½"
D	28'-1½"	H	22'-10½"		

DRAIN DIMENSIONS SPANS 10-19

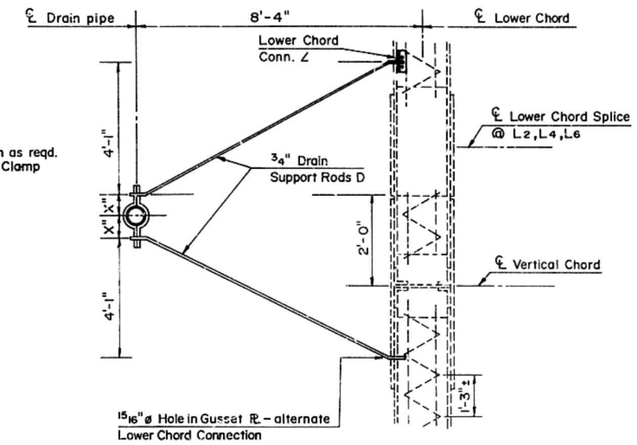

SECTION C-C

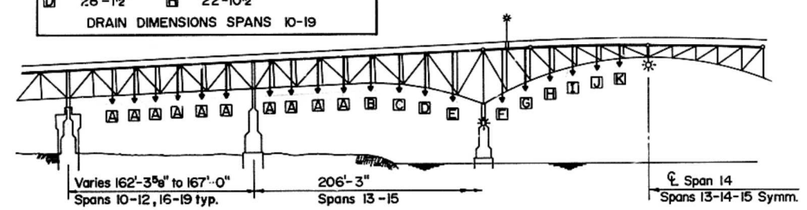

TRUSS DRAIN DIMENSIONS

Total Truss Drain Extensions Required = 136

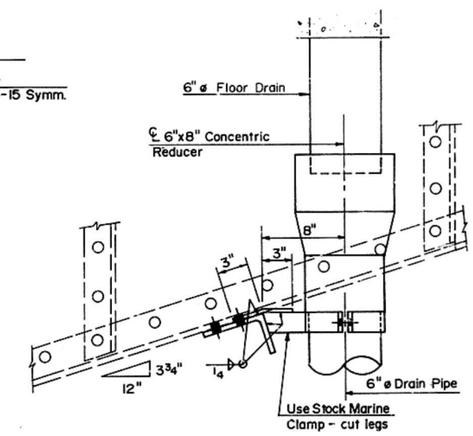

SECTION G-G

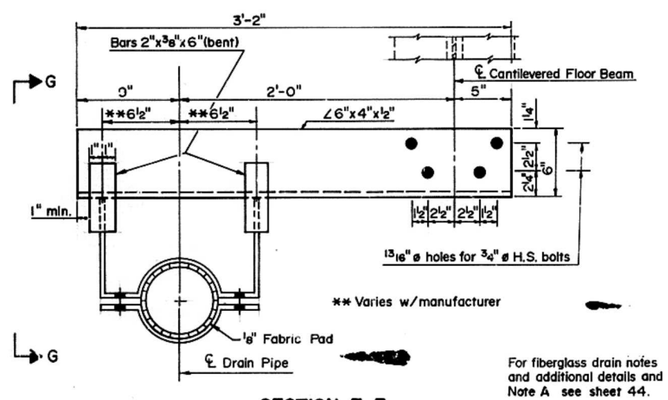

SECTION F-F
CANTILEVER DRAIN SUPPORT

For fiberglass drain notes and additional details and Note A see sheet 44.

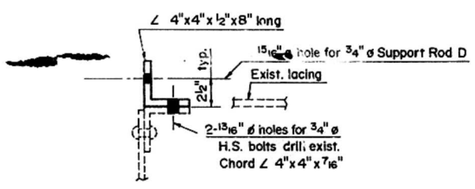

SECTION U-U
LOWER CHORD CONNECTION ANGLE

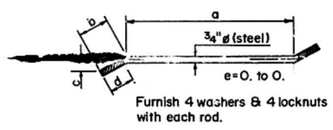

DRAIN SUPPORT RODS B,C&D

ROD DIMENSION TABLE

ROD	a	b	c	d	e
B	7'-6½"	7"	2¼"	6"	8'-8½"
C	7'-1½"	7"	1"	6"	8'-3½"
D	8'-2"	7"	3"	6"	9'-4"

DECK DRAIN EXTENSION-TRUSS
CEDAR STREET BRIDGE
F.A. RTE. 669 SEC. 103B-I-4(D)
PEORIA-TAZEWELL COUNTIES

MTA, INCORPORATED

DESIGNED J.N. CHECKED G.B.M.
DRAWN J.D.W. DATE 12-11-87 NO. 85-12

ROUTE NO.	SECTION	COUNTY	TOTAL SHEETS	SHEET NO.
FA.669	⊗	PEORIA TAZEWELL	82	48
FED. ROAD DIST. NO. 7		ILLINOIS	PROJECT	~~STP-669(-)~~

⊗ 103B-I-4(D)

SHEET 46 OF 70

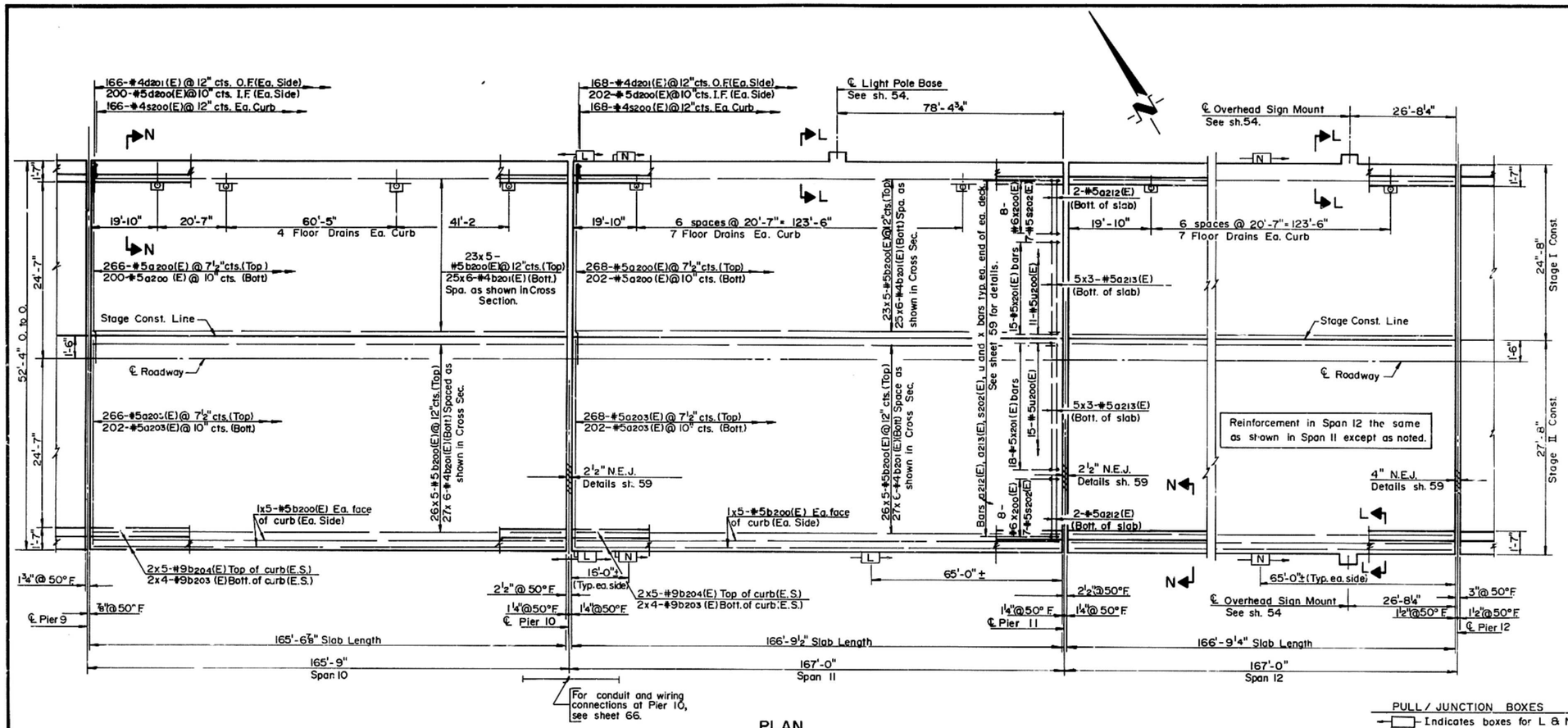

PLAN

PULL / JUNCTION BOXES

Indicates boxes for L & N circuits on outside face of parapet curbs, approximate location shown. For box details see sheet 65.

1'-8"	b201(E)
2'-2"	b200(E)
5'-9"	b203(E)
8'-1"	b204(E)

MIN. BAR LAP

BILL OF MATERIAL ①

	BAR	NO.	SIZE	LENGTH	SHAPE
	a200(E)	1406	#5	26'-8"	
	a203(E)	1406	#5	27'-5"	
	a212(E)	24	#5	7'-6"	
	a213(E)	180	#5	4'-8"	
	b200(E)	795	#5	35'-4"	
	b201(E)	936	#4	29'-4"	
	b203(E)	48	#9	46'-2"	
	b204(E)	60	#9	40'-0"	
	d200(E)	1208	#5	4'-0"	
	d201(E)	1004	#4	2'-9"	
*	d202(E)	18	#6	8'-11"	
*	d203(E)	9	#6	5'-2"	
	e200(E)	216	#4	20'-3"	
	e201(E)	48	#4	21'-5"	
	e202(E)	24	#4	20'-9"	
	s200(E)	1004	#4	5'-3"	
	s202(E)	84	#5	4'-11"	
	u200(E)	156	#5	4'-9"	
	x200(E)	96	#6	5'-5"	
	x201(E)	198	#5	4'-11"	
	Neoprene Exp. Joint (4")			Lin. Ft.	52
	Class X Concrete Superstr.			Cu. Yd.	760.6
	Reinf. Bars (Epoxy Coated)			Lbs.	161,380
	Neoprene Exp. Joint (2½")			Lin. Ft.	104
	Floor Drains			Each	36
	Shear Stud Connectors ⋇⋇			Each	384

Reinforcement bars designated "(E)" shall be epoxy coated.

Bars indicated thus ; 2x3-#5 etc., indicate 2 lines of bars with 3 lengths per line.

* Bar d202(E) & d203(E) are included in the Light Pole and Overhead Sign Mounting bases, see sheet 54.

⋇⋇ Shear studs on stringers not included. Sheet 33.

① Includes quantities for parapets on sheet 47.

For end of deck details, see sheet 59.

For parapet details, see sheet 54.

For Floor Drain details, see sheet 44.

For Sec. L-L, see sheet 54.

For Sec. N-N, see sheet 47.

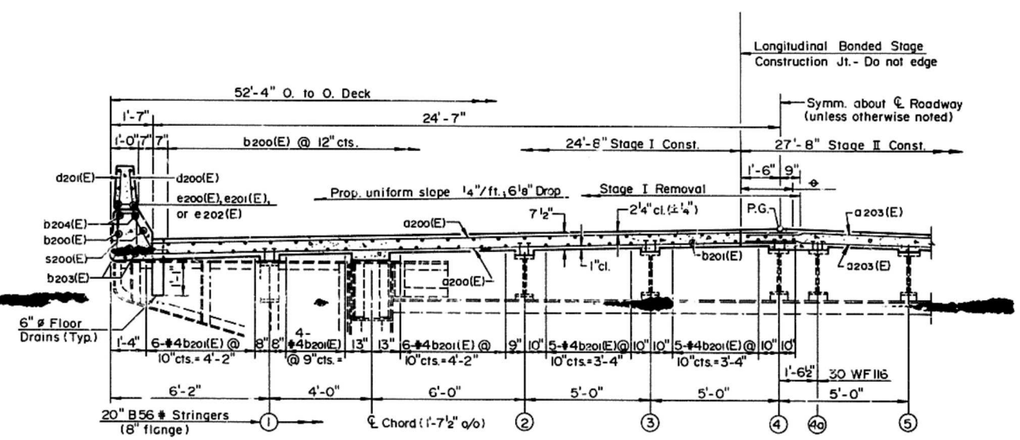

TYPICAL CROSS SECTION

Spans 10, 11 & 12
(See Sheet 52)

◆ See Sht. 39

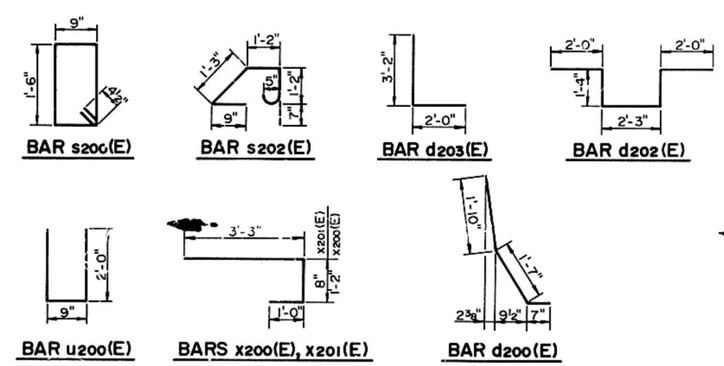

PLAN SPANS 10, 11, & 12
CEDAR STREET BRIDGE
F.A. RTE. 669 SEC. 103B-I-4(D)
PEORIA TAZEWELL COUNTIES

MTA, INCORPORATED

DESIGNED P.B.L. CHECKED J.N.
DRAWN D.D.R. DATE 12-11-87 NO. 85-12

Reinforcement bars designated (E) shall be epoxy coated.

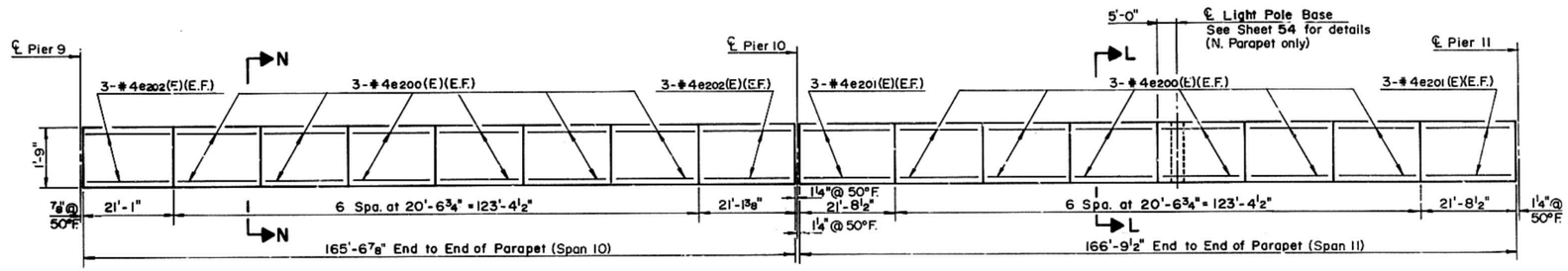

ELEVATION-PARAPET

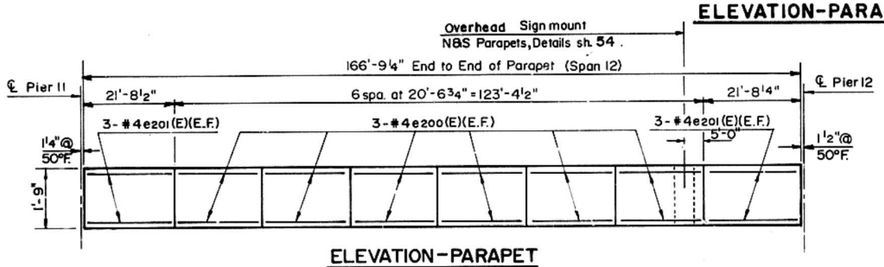

ELEVATION-PARAPET

REINFORCEMENT BAR DESIGNATION

y	SPANS	y	SPANS
1	8, 9	5	18, 19
2	10, 11, 12	6	20-24
3	13, 14, 15	7	25-29
4	16, 17	8	30-34

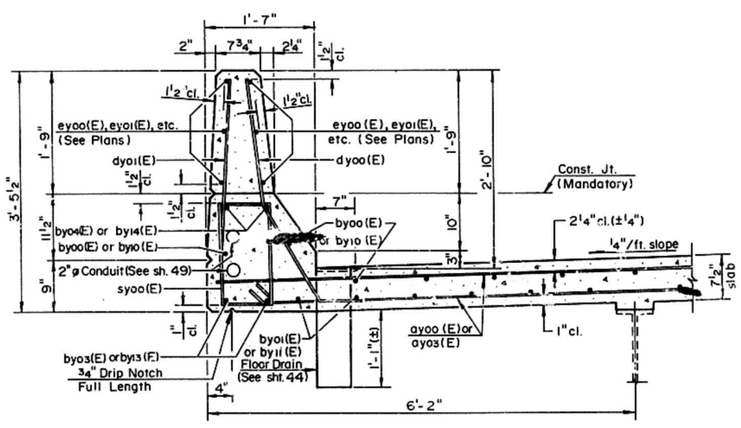

SECTION N-N

For Parapet Joint detail, see sheet 54.

PARAPET & DETAILS
SPANS 10, 11 & 12
CEDAR STREET BRIDGE
F.A. RTE. 669 SEC. 103B-1-4(D)
PEORIA TAZEWELL COUNTIES

MTA, INCORPORATED

DESIGNED P.B.L.	CHECKED J.N.
DRAWN R.H.H.	DATE 12-11-87 NO. 85-12

ROUTE NO.	SECTION	COUNTY	TOTAL SHEETS	SHEET NO.
F.A. 669	⊗	PEORIA TAZEWELL	82	50
FED. ROAD DIST. NO. 7		ILLINOIS	PROJECT BHF-669(-)	

⊗ 103B-I-4(D) SHEET 48 OF 70

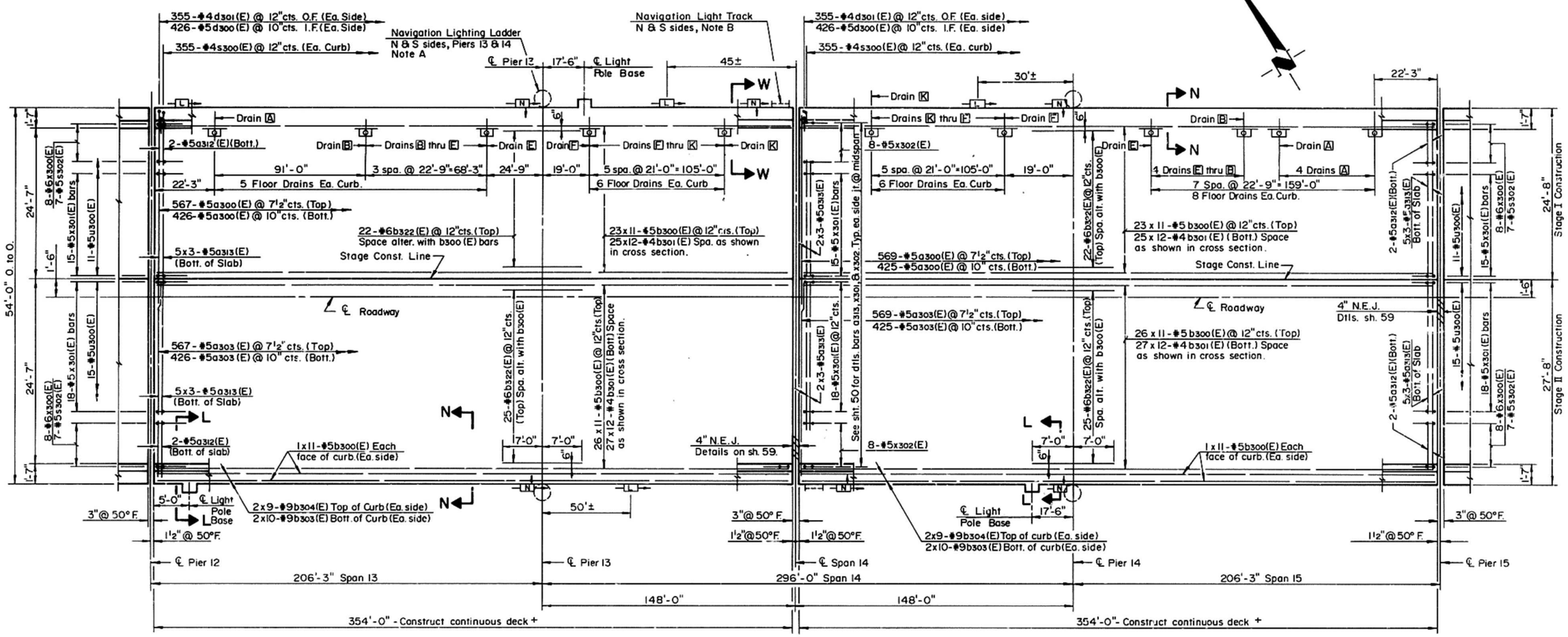

PLAN

+ For deck pouring sequence see sheet 49.

1'-8"	b301(E)
2'-2"	b300(E)
5'-9"	b303(E)
8'-1"	b304(E)

MINIMUM BAR LAP

BILL OF MATERIAL ① SPANS 13, 14 & 15

	BAR	NO.	SIZE	LENGTH	SHAPE
	a300(E)	1986	#5	26'-8"	—
	a303(E)	1986	#5	27'-5"	—
	a312(E)	8	#5	7'-6"	—
	a313(E)	84	#5	4'-8"	—
	b300(E)	1166	#5	34'-3"	—
	b301(E)	1248	#4	31'-1"	—
	b303(E)	80	#9	40'-8"	—
	b304(E)	72	#9	46'-6"	—
	b322(E)	94	#6	14'-0"	—
	d300(E)	1704	#5	4'-0"	⌞
	d301(E)	1420	#4	2'-9"	—
*	d302(E)	18	#6	8'-11"	⊓
*	d303(E)	9	#6	5'-2"	⌞
	e300(E)	192	#4	22'-5"	—
	e301(E)	144	#4	20'-8"	—
	e302(E)	24	#4	23'-9"	—
	e303(E)	24	#4	21'-9"	—
	s300(E)	1420	#4	5'-3"	⊐
	s302(E)	28	#5	4'-11"	⊐
	u300(E)	104	#5	4'-9"	⊔
	x300(E)	32	#6	5'-5"	⊏
	x301(E)	132	#5	4'-11"	⊏
	x302(E)	32	#5	4'-6"	⊏
	Floor Drains			Each	50
	Class X Concrete Superstr.			Cu. Yds.	1,057.3
	Reinf. Bars (Epoxy Coated)			Lbs.	226,700
	Neoprene Exp. Joint (4")			Lin. Ft.	104
	Shear Stud Connectors **			Each	128

① Quantities for parapets are included. See sh. 49.

Reinforcement bars indicated thus ¡2x9-#9 etc. indicates two lines of bars with nine bars per line.
Reinforcement bars designated (E) shall be epoxy coated.
Work this sheet with sheet 49.
For Drain Extensions [A] thru [K], see sheet 45.
For Sec. L-L, see sheet 54.
For Sec. N-N, see sheet 47.
For Sec. W-W, see sheet 49.
For end of deck details, see sheets 50 & 59.
For Floor Drain details, see sheet 44.
* Bars d302(E) and d303(E) are included in Light Pole Base. See sheet 54.
** Shear Stud Connectors on str[redacted] included. Sheet 33

[L,N] For Pull/Junction Box notes, see sheet 46.

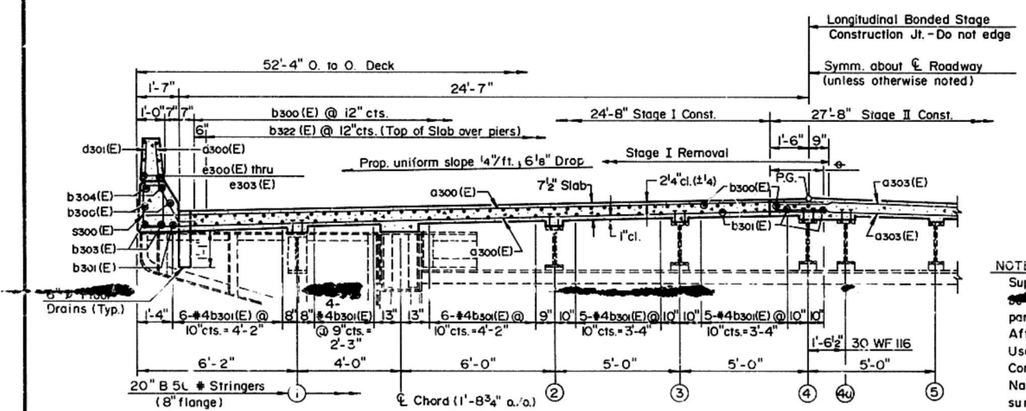

TYPICAL CROSS SECTION

Spans 13, 14 & 15
(See Sheet 52)

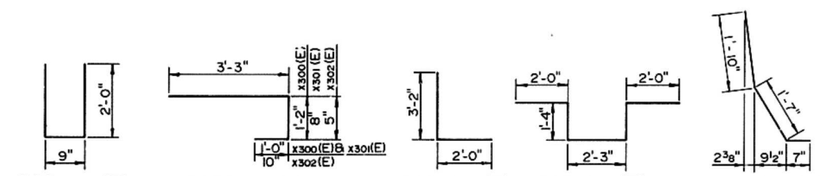

NOTE A

Support ∠s and caged ladders for Navigation Light Platforms, 4 locations, shall [redacted] connected from the existing parapet and temporarily supported during parapet removal and replacement.
After the replaced parapet has cured the assemblies shall be reconnected.
Use ¾" ø anchor bolts in existing holes or as directed by the Engineer.
Complete cost of disconnection, support and reattachment included as Navigation Lighting System - Lump Sum (Bill of Material, Sheet 50), which sum also includes payment for NOTE B work.

NOTE B

Support and reconnect Navigation light tracks at midspan 14 (2 locations) using procedures outlined in NOTE A. Payment included per NOTE A.

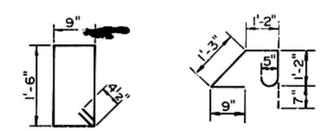

PLAN SPANS 13, 14 & 15
CEDAR STREET BRIDGE
F.A. RTE. 669 SEC. 103-1-4(D)
PEORIA TAZEWELL COUNTIES

MTA, INCORPORATED

DESIGNED P.B.L. CHECKED J.N.
DRAWN D.D.R. DATE 12-11-87 NO. 85-12

ROUTE NO.	SECTION	COUNTY	TOTAL SHEETS	SHEET NO.
F.A.669	⊛	PEORIA TAZEWELL	82	51
FED ROAD DIST NO 7	ILLINOIS	PROJECT BHF-669(—)		

⊛ 103B-I-4(D) SHEET 49 OF 70

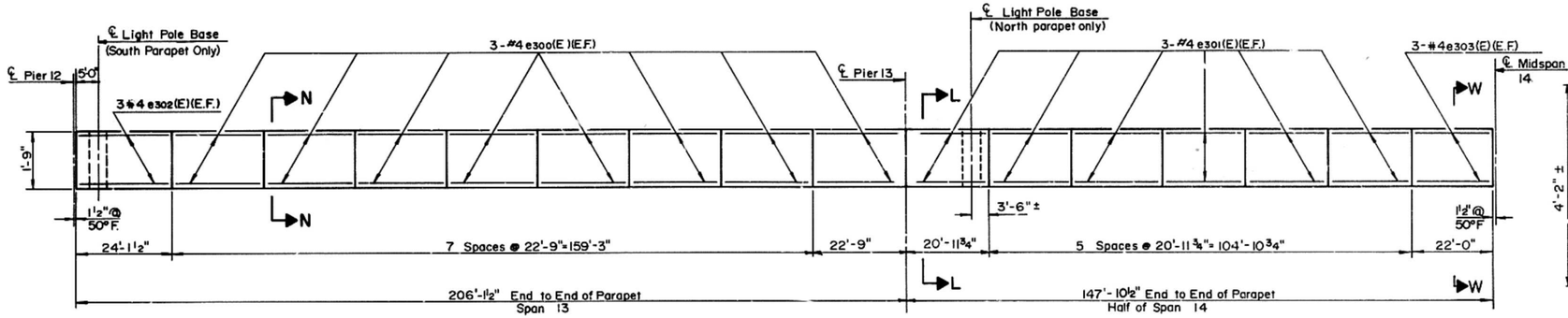

ELEVATION-PARAPET

Inside face North parapet shown; South similar.

Reinforcement bars designated (E) shall be epoxy coated.

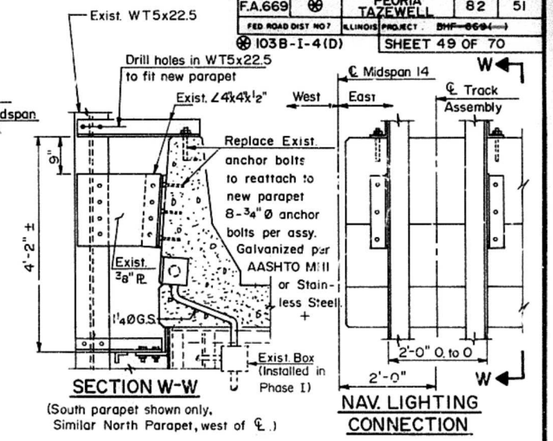

SECTION W-W

(South parapet shown only, Similar North Parapet, west of ℄.)

NAV. LIGHTING CONNECTION

+ Complete cost included in Navigation Lighting System - Lump Sum (Bill of Material - Sheet 50)

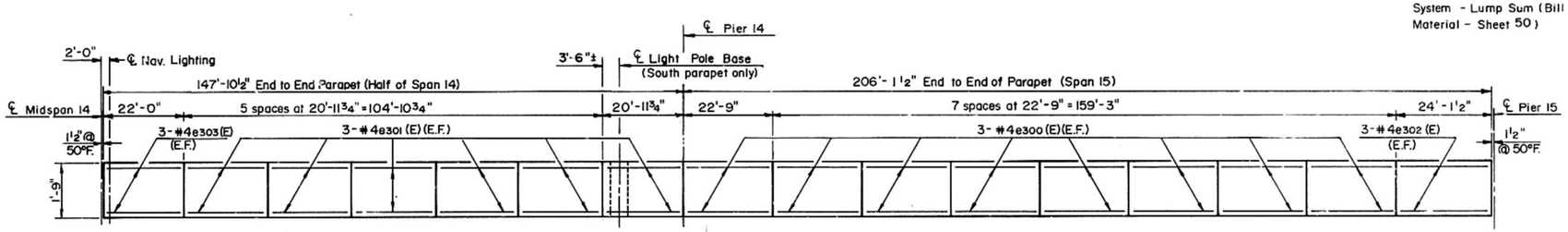

ELEVATION-PARAPET

Inside face North parapet shown; South similar.

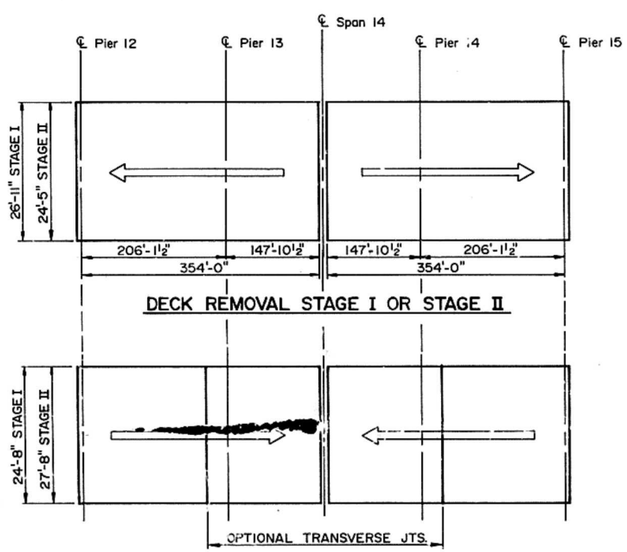

DECK REMOVAL STAGE I OR STAGE II

DECK REPLACEMENT-STAGE I OR STAGE II

SPANS 13-14-15
DECK REMOVAL & POURING SEQUENCE

Notes: Existing deck (Stage I or Stage II) on each side of the Midspan 14 joint shall be removed simultaneously in the directions shown.

Proposed deck (Stage I or Stage II) on each side of the Midspan 14 joint shall be replaced on each side simultaneously in the directions shown.

For Sec. L-L and parapet joint details see sheet 54.
For Sec. N-N see sheet 47.

PARAPET – SPANS 13-15
CEDAR STREET BRIDGE
F.A. RTE. 669 SEC. 103B-I-4(D)
PEORIA TAZEWELL COUNTIES

MTA, INCORPORATED

DESIGNED P.B.L. CHECKED J.N.
DRAWN D.D.R. DATE 12-11-87 NO. 85-12

ROUTE NO	SECTION	COUNTY	TOTAL SHEETS	SHEET NO
FA.669	⊛	PEORIA-TAZEWELL	82	52
FED ROAD DIST NO 7	ILLINOIS	PROJECT ~~BHF-669(-)~~		

⊛ 103B-I-4(B) SHEET 50 OF 70

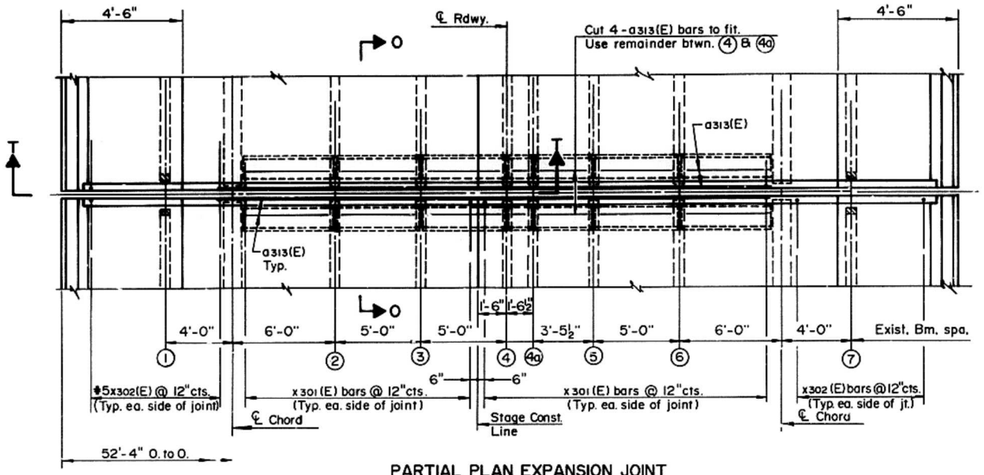

PARTIAL PLAN EXPANSION JOINT
(MID-SPAN 14 DECK JOINT)

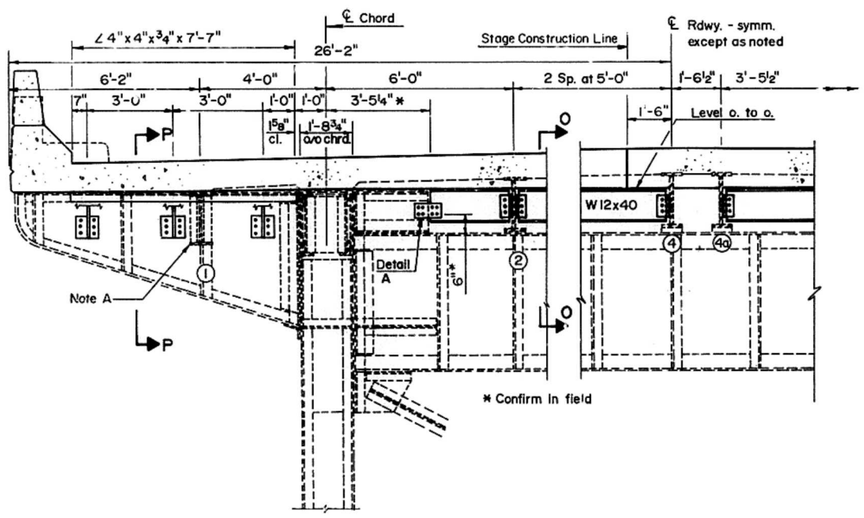

SECTION T-T
MID-SPAN 14
Looking East

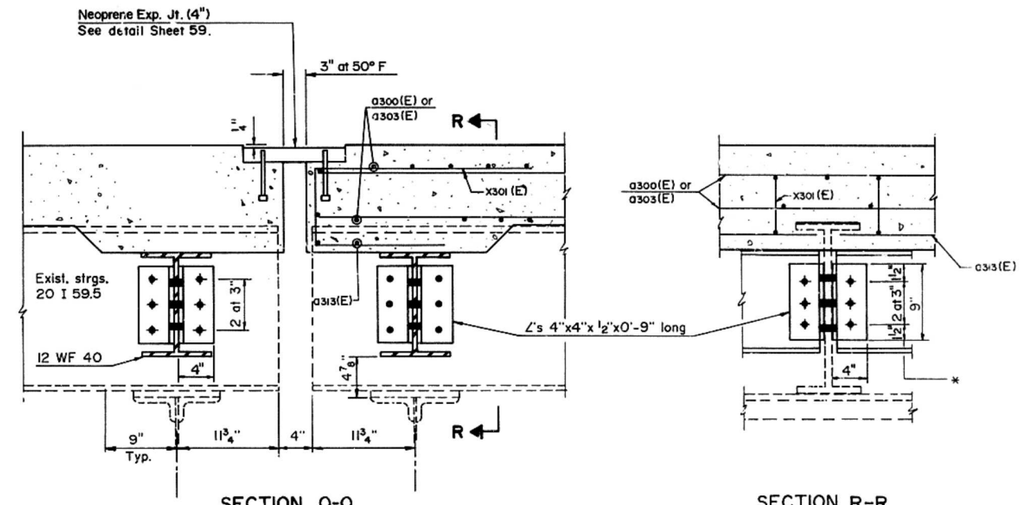

SECTION O-O

SECTION R-R
* 15⁄16" Ø holes for ¾" ø H.S. Bolts with 2 hardened washers

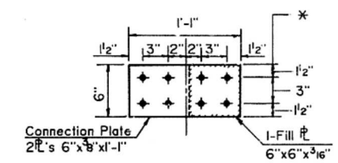

DETAIL A
CONNECTION PLATE AND FILL PLATE

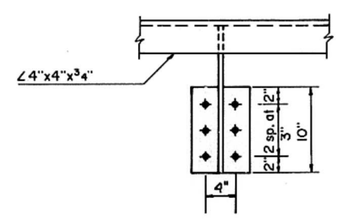

SECTION Q-Q

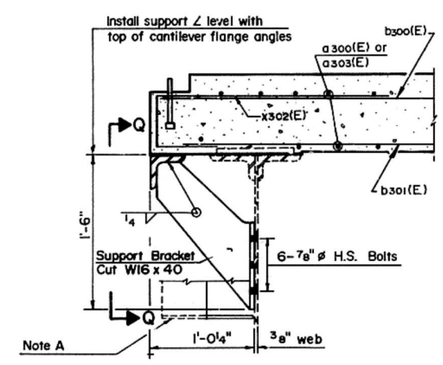

SECTION P-P

Note A: The removal of four stub stringer ends is included in Structural Steel Removal, Sheet 29.

+ This Lump Sum item includes all costs associated with the disconnection, temporary support and reattachment to the proposed parapet, of six navagation light facilities. See additional description on Sheets 48 & 49.

BILL OF MATERIAL

Item	Units	Quantity
Structural Steel	Lbs.	3480
+ Navigation Lighting System	Lump Sum	one

EXPANSION JOINT
MID-SPAN 14
CEDAR STREET BRIDGE
F.A. RTE. 669 SEC. 103B-I-4(D)
PEORIA TAZEWELL COUNTIES

MTA, INCORPORATED

DESIGNED J.B.N., P.L. CHECKED G.B.M.
DRAWN J.W., R.H.H. DATE 12-11-87 NO. 85-12

ROUTE NO.	SECTION	COUNTY	TOTAL SHEETS	SHEET NO.
FA.669	⊛	PEORIA TAZEWELL	82	53
FED. ROAD DIST. NO. 7		ILLINOIS	PROJECT	~~BHF-6601~~
⊛ 103B-I-4(D)			SHEET 51 OF 70	

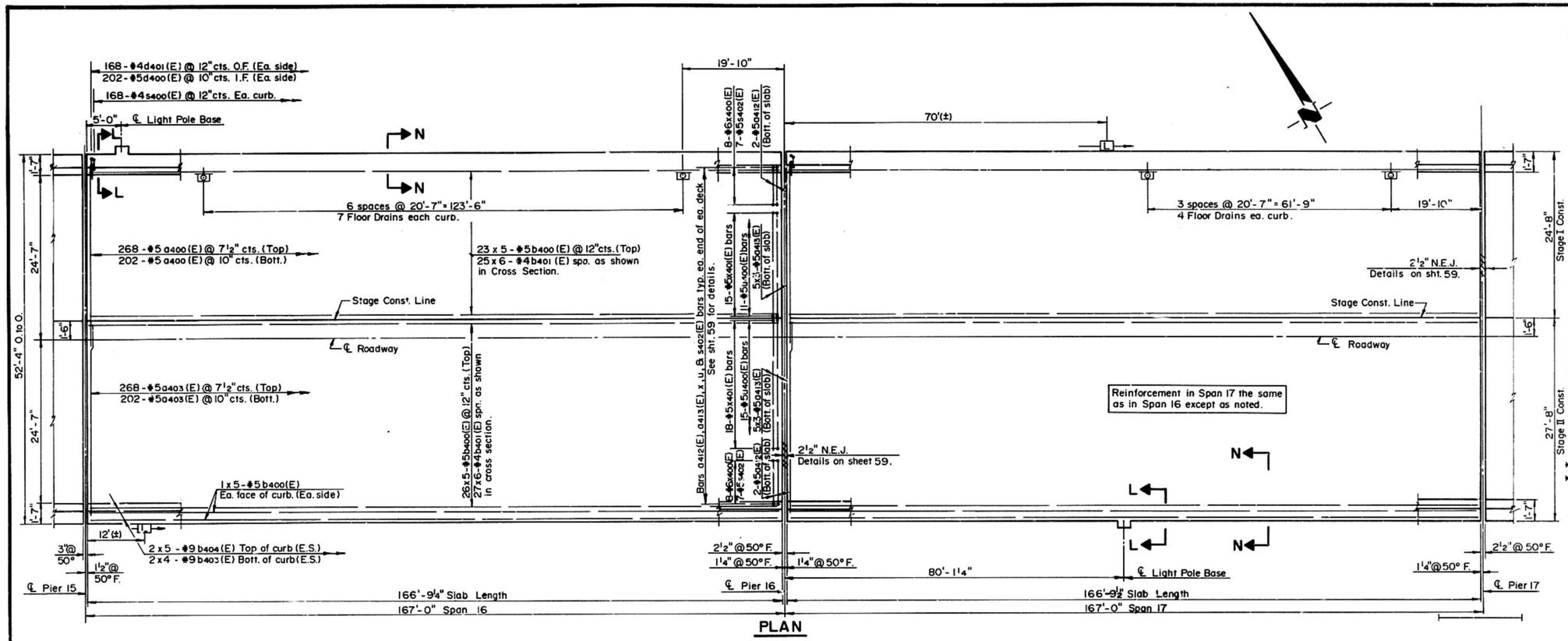

PLAN

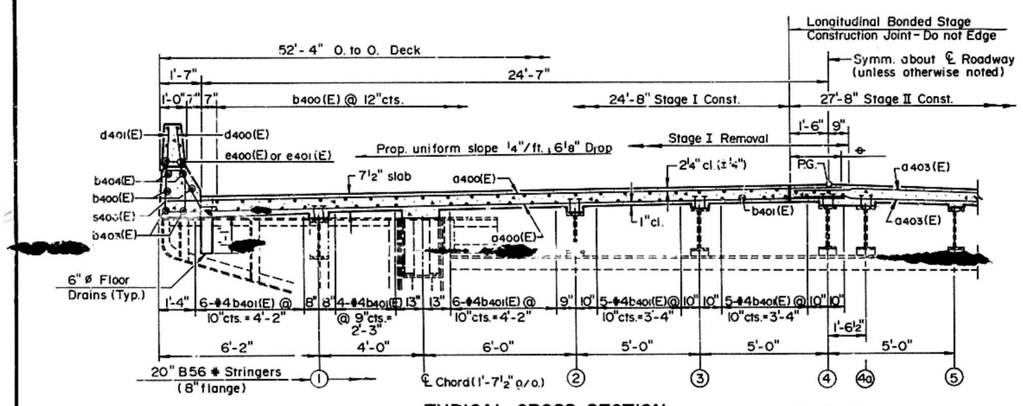

TYPICAL CROSS SECTION

Spans 16 & 17
See Sheet 52

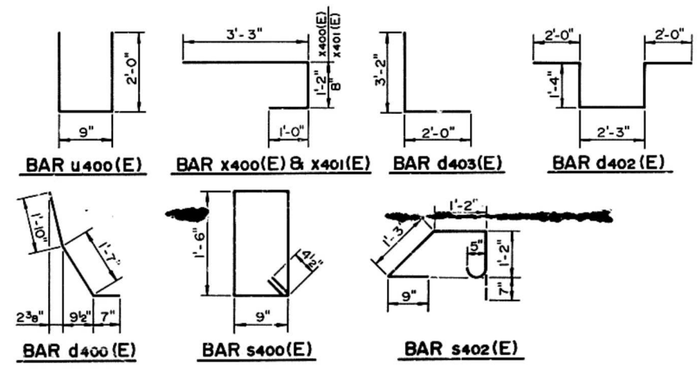

MIN. BAR LAP

1'-8"	b401(E)
2'-2"	b400(E)
5'-9"	b403(E)
8'-1"	b404(E)

BILL OF MATERIAL ①

BAR	NO.	SIZE	LENGTH	SHAPE
a400(E)	940	#5	26'-8"	
a403(E)	940	#5	27'-5"	
a412 (E)	16	#5	7'-6"	
a413 (E)	120	#5	4'-8"	
b400(E)	530	#5	35'-3"	
b401 (E)	624	#4	29'-4"	
b403(E)	32	#9	46'-0"	
b404 (E)	40	#9	39'-9"	
d400(E)	808	#5	4'-0"	
d401 (E)	672	#4	2'-9"	
* d402 (E)	12	#6	8'-11"	
* d403(E)	6	#6	5'-2"	
e400 (E)	144	#4	20'-3"	
e401 (E)	48	#4	21'-4"	
s400 (E)	672	#4	5'-3"	
s402(E)	56	#5	4'-11"	
u400(E)	104	#5	4'-9"	
x400 (E)	64	#6	5'-5"	
x401 (E)	132	#5	4'-11"	
Floor Drain			Each	22
Class X Conc. Superstr.			Cu. Yd.	509.3
Reinf. Bars (Epoxy Ct'd.)			Lbs.	107,670
Shear Stud Connectors **			Each	256
Neoprene Exp. Joint (2½")			Lin. Ft.	104

Bars indicated thus ; 2x4-#9 etc., indicates two lines of bars with four lengths per line.

Bars designated (E) shall be epoxy coated.

* Bars d402(E) & d403(E) are included in Light Pole Base. See sheet 54.

** Shear Studs on stringers not included, Sht. 33

① Includes quantities for parapets.

Work this sheet with sheet 52.

For Sec. L-L, see sheet 54.

For Sec. N-N, see sheet 47.

For Floor Drain detail, see sheet 44.

For end of deck details, see sheet 59.

L For Term./Junction Box notes, see sheet 46.

PLAN SPANS 16 & 17
CEDAR STREET BRIDGE
F.A. RTE. 669 SEC. 103B-I-4 (D)
PEORIA TAZEWELL COUNTIES

MTA, INCORPORATED

DESIGNED P.B.L. CHECKED J.N.
DRAWN D.D.R. DATE 12-11-87 NO. 85-12

ROUTE NO	SECTION	COUNTY	TOTAL SHEETS	SHEET NO
F.A.669	⊛	PEORIA TAZEWELL	82	54
FED ROAD DIST NO 7	ILLINOIS	PROJECT ~~BHF-669-1~~		

⊛103B-I-4(D) SHEET 52 OF 70

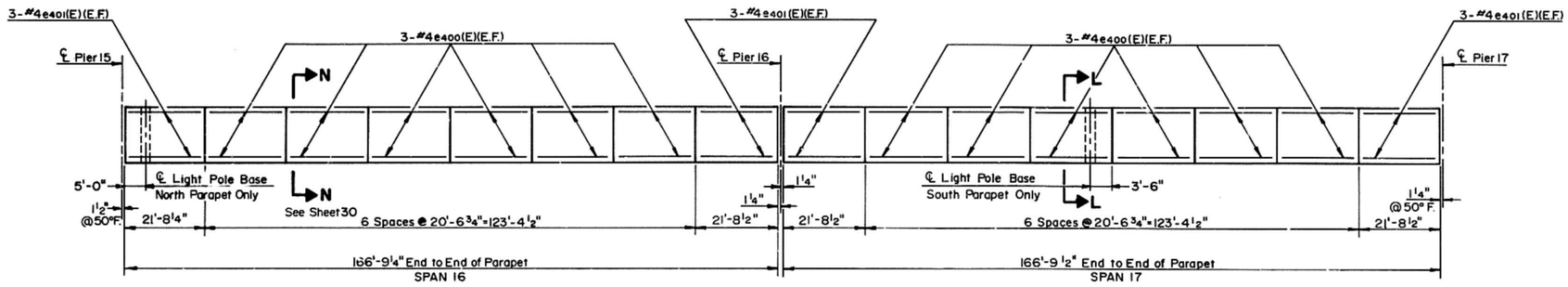

ELEVATION - PARAPET

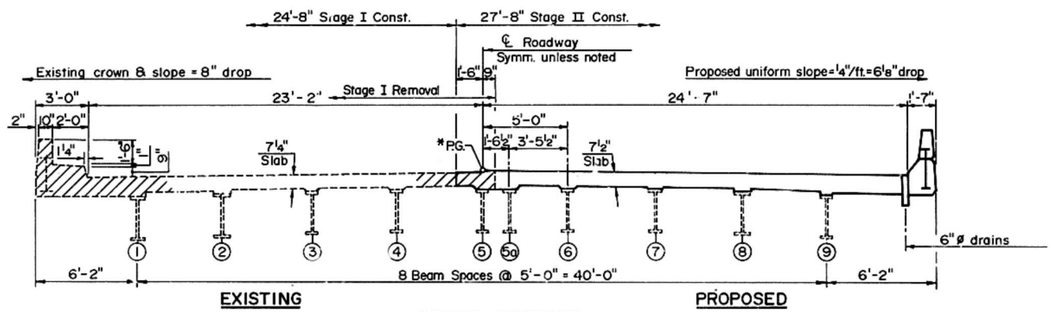

CROSS SECTION
SPANS 1-7
(Looking East)

*Exact location of P.G. varies in Spans 2 & 3.

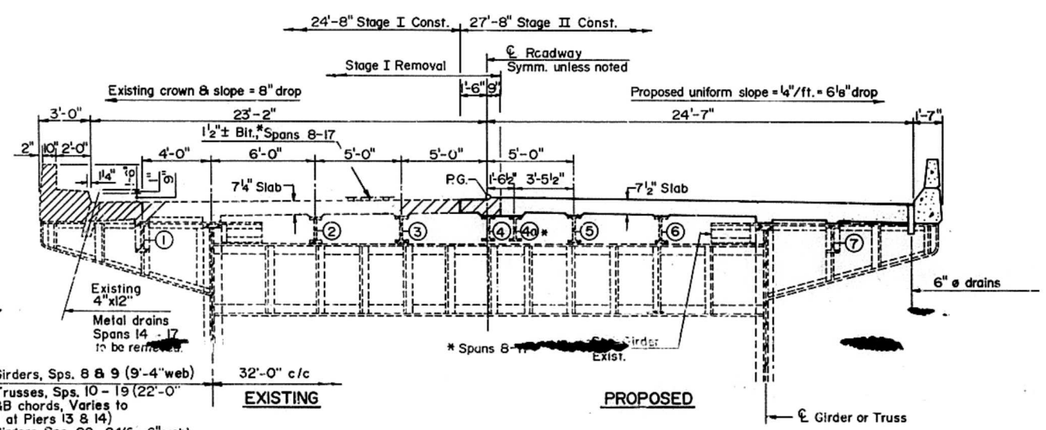

CROSS SECTION
SPANS 8-34
(Looking East)

For Sec. L-L, see sheet 54.
For Sec. N-N, see sheet 47.
For Parapet Joint details, see sheet 54.

PARAPET & DETAILS
SPANS 16 & 17
CEDAR STREET BRIDGE
F.A. RTE. 669 SEC. 103B-I-4(D)
PEORIA TAZEWELL COUNTIES

MTA, INCORPORATED

DESIGNED P.B.L.	CHECKED J.N.
DRAWN D.D.R.	DATE 12-11-87 NO.85-12

ROUTE NO	SECTION	COUNTY	TOTAL SHEETS	SHEET NO
F.A.669	⊛	PEORIA TAZEWELL	82	55
FED ROAD DIST NO 7	ILLINOIS	PROJECT ~~MASHF-669(1-7)~~		

⊛ 103B-I-4(D) SHEET 53 OF 70

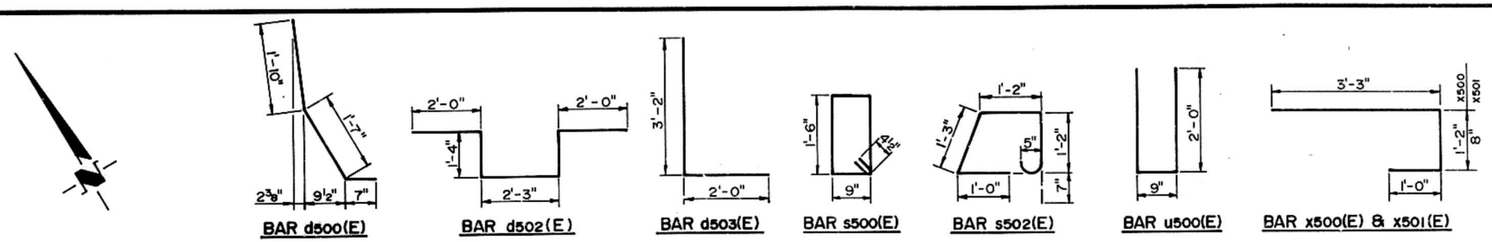

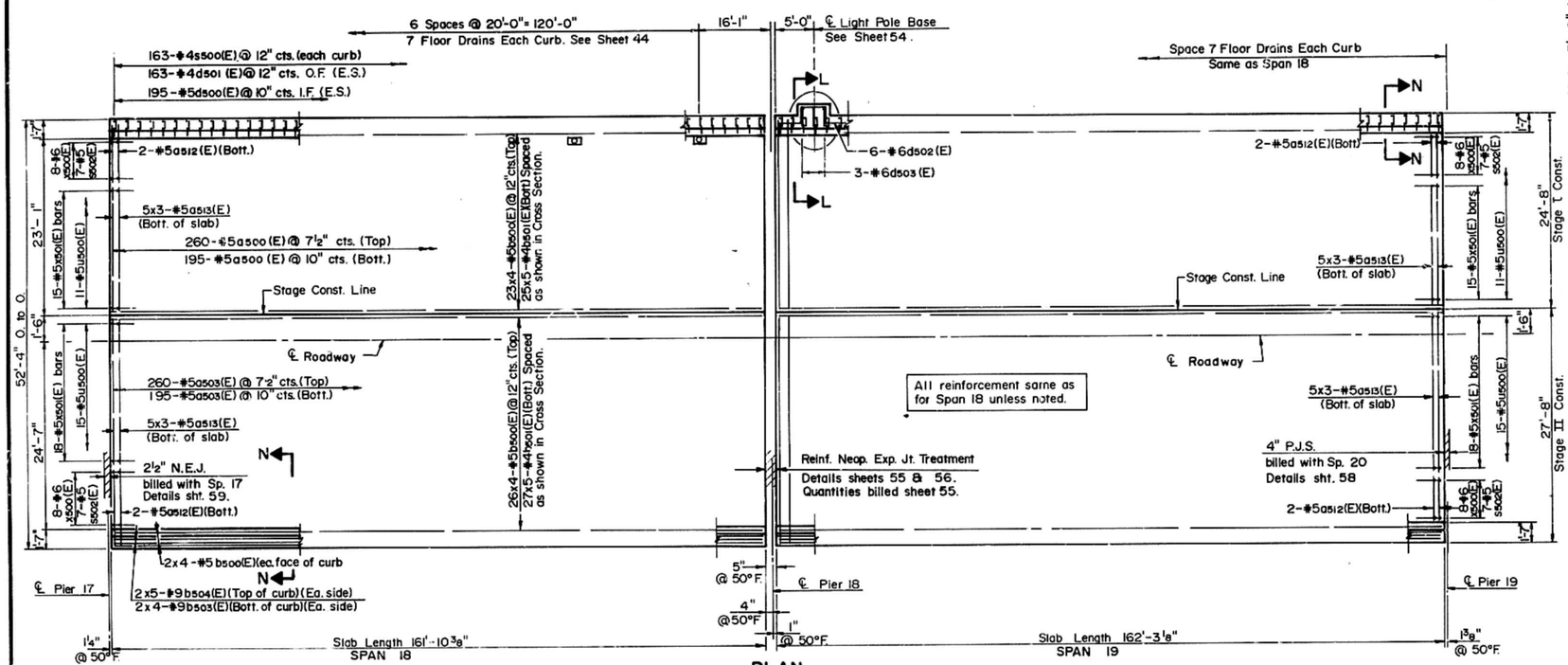

PLAN

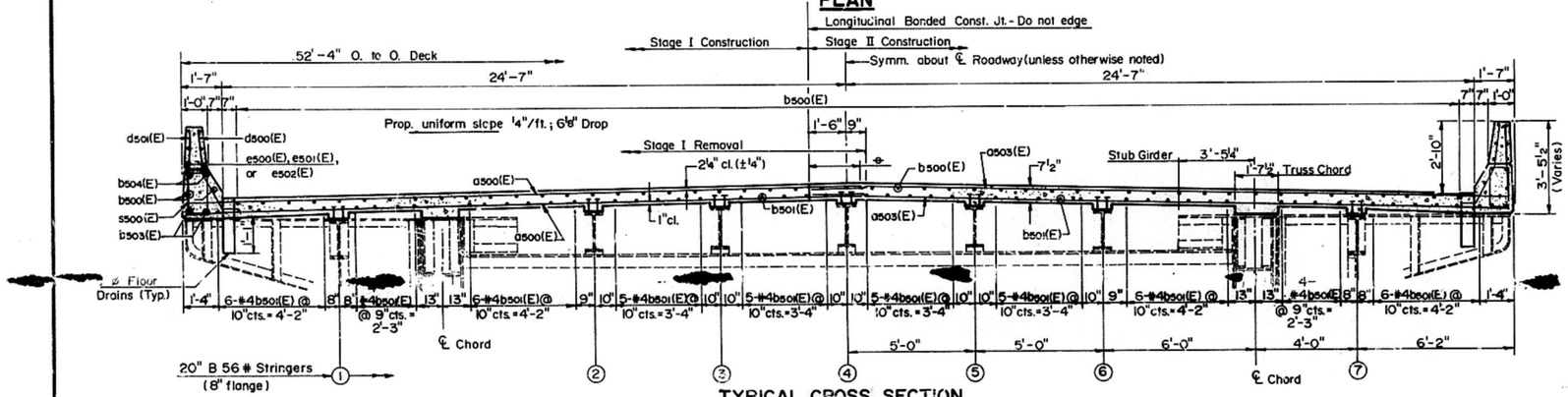

TYPICAL CROSS SECTION

Spans 18 & 19

SeeSht.39

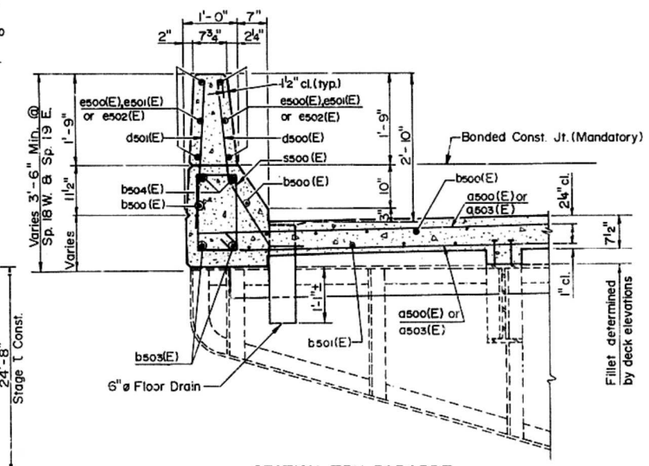

SECTION TRU PARAPET

(Near Pier 18)

MIN. BAR LAP

1'-8"	b501(E)
2'-2"	b500(E)
5'-9"	b503(E)
8'-1"	b504(E)

Bars indicated thus; 2x4-#9 etc., indicates two lines of bars with four lengths per line.

Bars designated (E) shall be epoxy coated.

* Bars d502(E) & d503(E) are included in Light Pole Base. See sheet 54.

** Shear Studs on stringers not included.

(1) Includes quantities for parapets.

For Sec. L-L, see sheet 54.

For Sec. N-N, see sheet 47.

For Floor Drain details, see sheet 44.

For end of deck details, see sheet 59.

For parapets, see sheet 54.

BILL OF MATERIAL (1)

	Bar	No.	Size	Length	Shape
	a500(E)	910	#5	26'-8"	
	a503(E)	910	#5	27'-5"	
	a512(E)	8	#5	7'-6"	
	a513(E)	60	#5	4'-8"	
	b500(E)	424	#5	42'-2"	
	b501(E)	520	#4	33'-9"	
	b503(E)	32	#9	44'-10"	
	b504(E)	40	#9	38'-10"	
	d500(E)	780	#5	4'-0"	
	d501(E)	652	#4	2'-9"	
*	d502(E)	6	#6	8'-11"	
*	d503(E)	3	#6	5'-2"	
	e500(E)	144	#4	19'-8"	
	e501(E)	36	#4	20'-9"	
	e502(E)	12	#4	20'-3"	
	s500(E)	652	#4	5'-3"	
	s502(E)	28	#5	4'-11"	
	u500(E)	52	#5	4'-9"	
	x500(E)	32	#6	5'-5"	
	x501(E)	66	#3	4'-11"	
	Reinf. Bars (Epoxy Coated)			Lbs.	102,620
	Class X Concrete Superstr.			Cu. Yds.	494.5
	Floor Drains			Each	28
	Stud Shear Connectors**			Each	128

PLAN SPANS 18 & 19
CEDAR STREET BRIDGE
F.A. RTE. 669 SEC. 103B-I-4(D)
PEORIA-TAZEWELL COUNTIES

MTA, INCORPORATED

DESIGNED G.B.M. CHECKED J.N.
DRAWN C.S.L. DATE 12-11-87 ILL.85-12

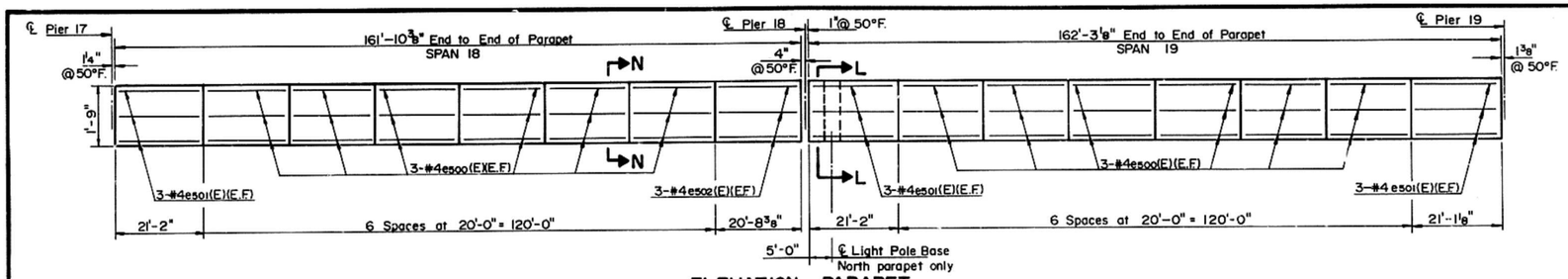

ELEVATION – PARAPET

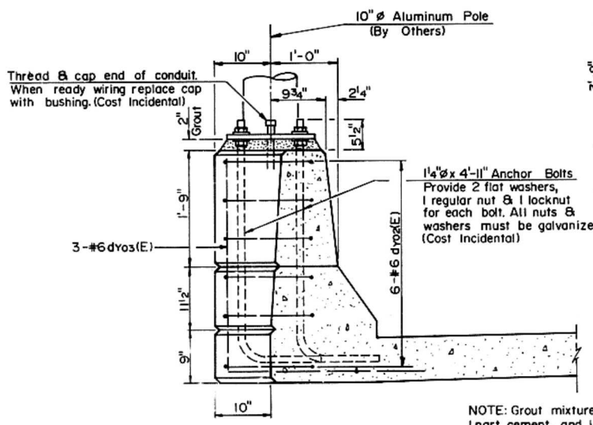

SECTION L-L

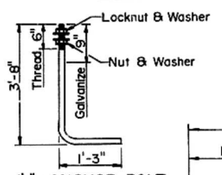

1¼"ø ANCHOR BOLT

NOTE: Grout mixture shall consist of 1 part sand, 1 part cement, and 1 part clips (pea gravel). The grout shall contain water for a 1" slump, cost incidental to pole.

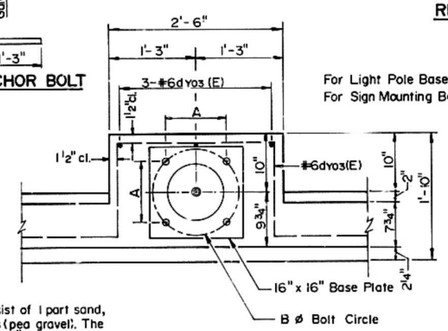

TOP VIEW

Y	SPAN	Y	SPAN
1	9	5	19
2	11	6	20,23
3	13,14,15	7	26,29
4	16,17	8	32,34

REINFORCEMENT BAR DESIGNATION

For Light Pole Base A = 10⅝" ; B = 15"
For Sign Mounting Base A = 11⅝" ; B = 16"

LIGHT POLE BASE DETAILS
SIGN MOUNTING BASE DETAILS

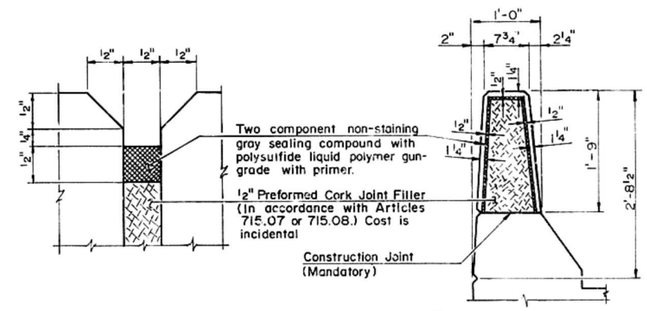

PARAPET JOINT DETAILS

PARAPET - SPANS 18 & 19
SUPERSTRUCTURE DETAILS
SPANS 18-34
CEDAR STREET BRIDGE
F.A. RTE. 669 SEC. 103B-I-4(D)
PEORIA-TAZEWELL COUNTIES

MTA, INCORPORATED

DESIGNED G.B.M. CHECKED J.N.
DRAWN C.S.L. DATE 12-11-87 NO.85-12

ROUTE NO	SECTION	COUNTY	TOTAL SHEETS	SHEET NO
FA 669	⊗	PEORIA TAZEWELL	82	57
FED ROAD DIST NO 7	ILLINOIS	PROJECT ~~BHF-669(—)~~	SHEET 55 OF 70	

⊗ 103B-I-4(D)

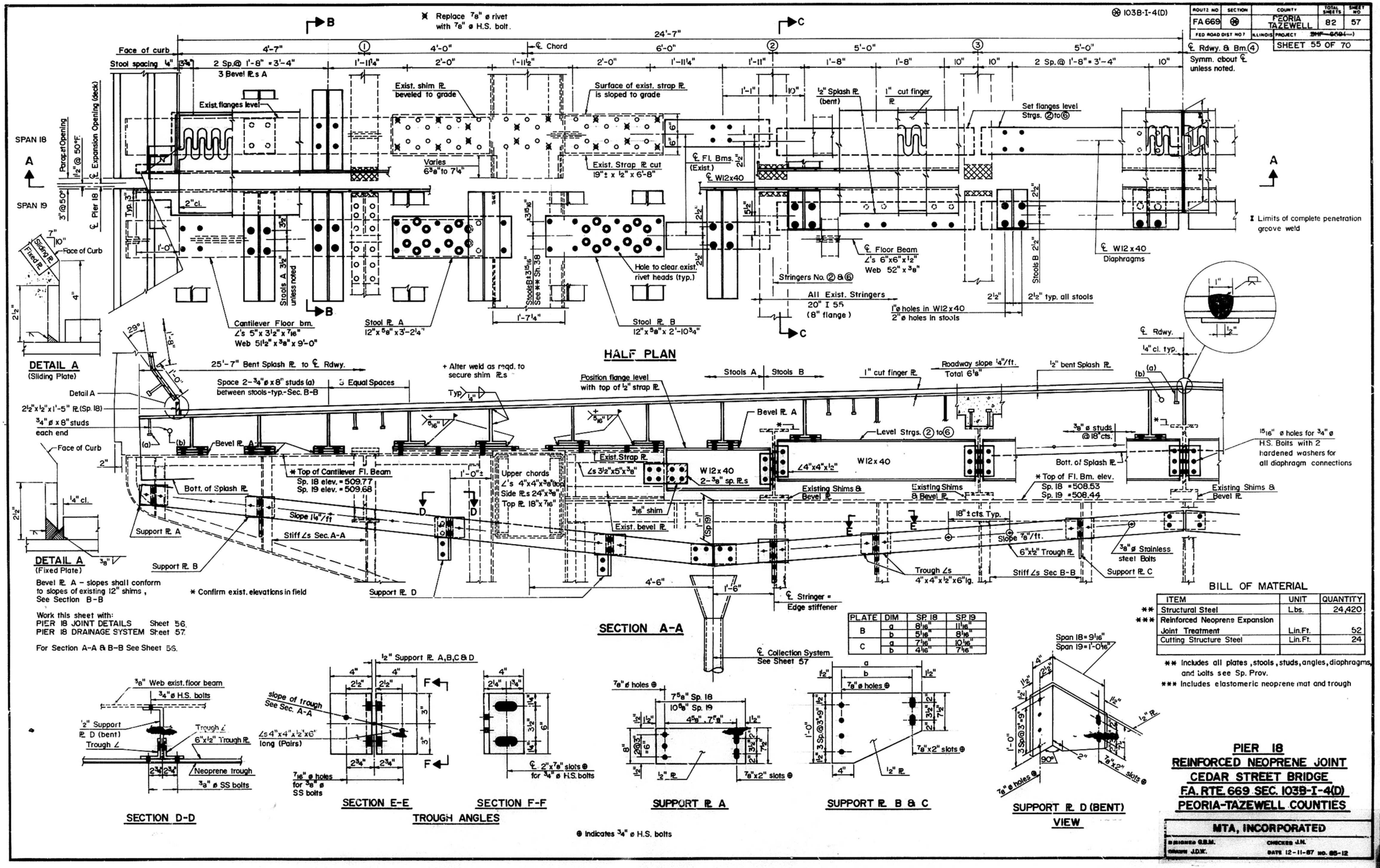

PLATE	DIM	SP. 18	SP. 19
B	a	8 1/16"	11 11/16"
	b	5 1/16"	8 1/16"
C	a	7 1/16"	10 1/16"
	b	4 1/16"	7 1/16"

⊕ Indicates ¾" ø H.S. bolts

BILL OF MATERIAL

	ITEM	UNIT	QUANTITY
**	Structural Steel	Lbs.	24,420
***	Reinforced Neoprene Expansion Joint Treatment	Lin.Ft.	52
	Cutting Structure Steel	Lin.Ft.	24

** Includes all plates, stools, studs, angles, diaphragms, and bolts see Sp. Prov.

*** Includes elastomeric neoprene mat and trough

PIER 18
REINFORCED NEOPRENE JOINT
CEDAR STREET BRIDGE
F.A. RTE. 669 SEC. 103B-I-4(D)
PEORIA-TAZEWELL COUNTIES

MTA, INCORPORATED

DESIGNED G.B.M. CHECKED J.N.
DRAWN J.D.W. DATE 12-11-87 NO. 85-12

ROUTE NO	SECTION	COUNTY	TOTAL SHEETS	SHEET NO
F.A.669	⊛	PEORIA TAZEWELL	82	58
FED ROAD DIST NO 7	ILLINOIS	PROJECT ~~BHF 669(-)~~		
⊛ 103B-I-4(D)		SHEET 56 OF 70		

* 50° F.
For each 10° F increase in temperature above 50° F reduce this dimension ¼"
For each 10° F decrease below 50° F increase this dimension ¼"

+++ Conforming to Art. 710.38 of Std. Specs.

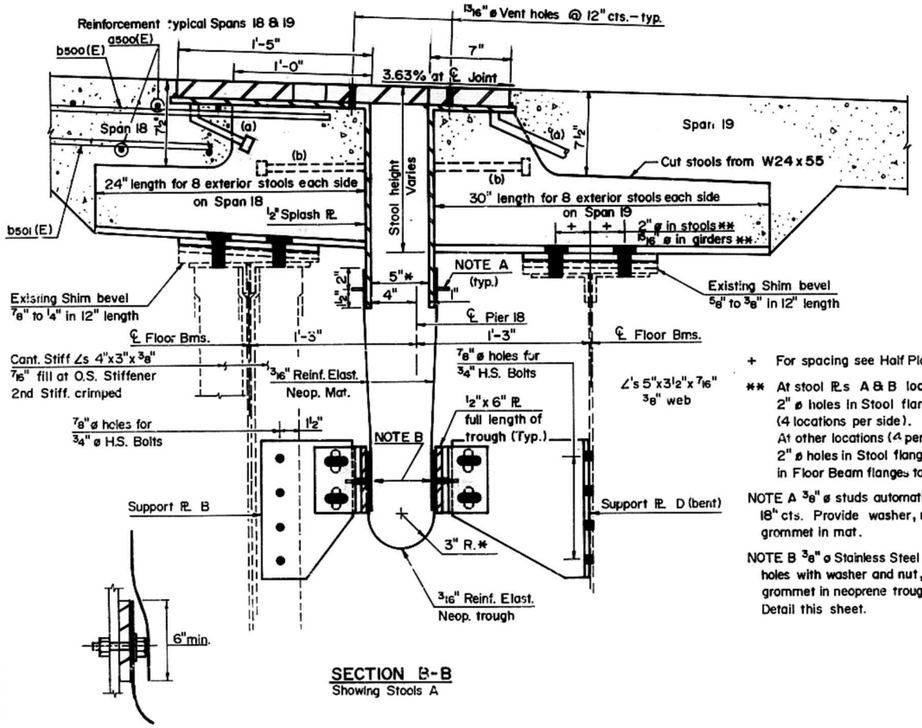

SECTION B-B
Showing Stools A

CONNECTION DETAIL

\+ For spacing see Half Plan

** At stool Pls A & B locate and drill 2" ø holes in Stool flanges in field (4 locations per side). At other locations (4 per side) shop drill 2" ø holes in Stool flanges and drill holes in Floor Beam flanges to fit.

NOTE A 3/8" ø studs automatic end welded @ 18" cts. Provide washer, nut and brass grommet in mat.

NOTE B 3/8" ø Stainless Steel bolts in 7/16" ø holes with washer and nut, Provide brass grommet in neoprene trough. See Connection Detail this sheet.

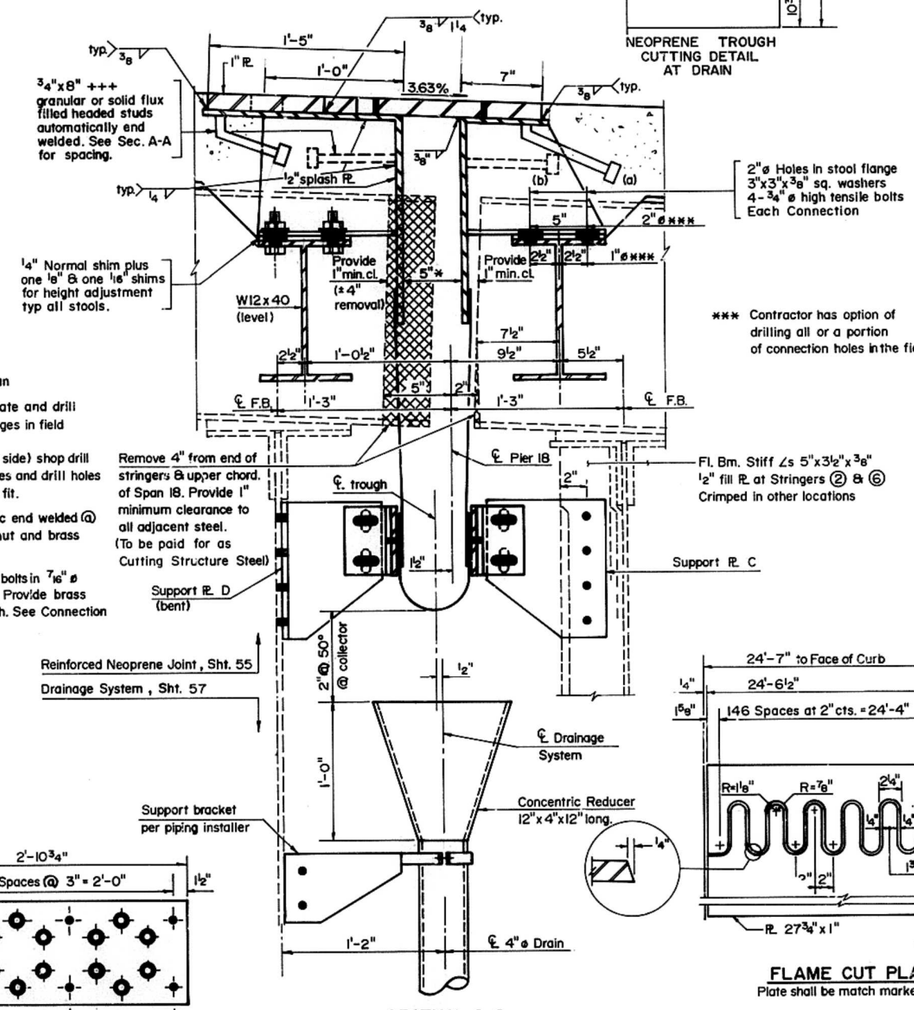

SECTION C-C
Showing Stools B

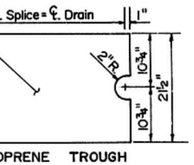

NEOPRENE TROUGH CUTTING DETAIL AT DRAIN

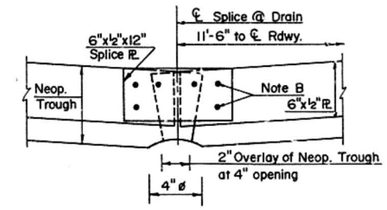

TROUGH DETAIL AT DRAIN

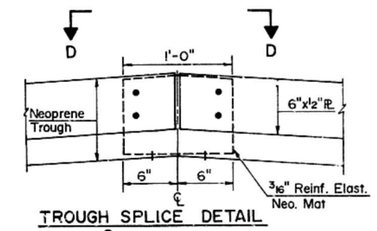

TROUGH SPLICE DETAIL AT ℄ ROADWAY

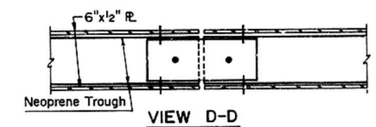

VIEW D-D

*** Contractor has option of drilling all or a portion of connection holes in the field.

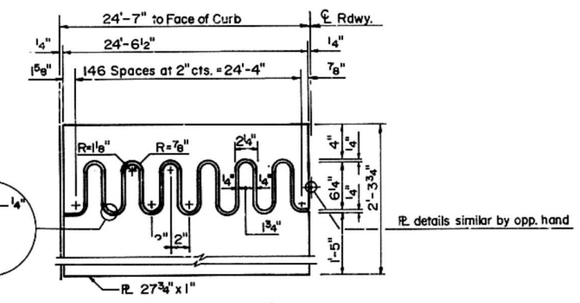

FLAME CUT PLATE
Plate shall be match marked

Notes:
For bill of materials, See Sheet 55.

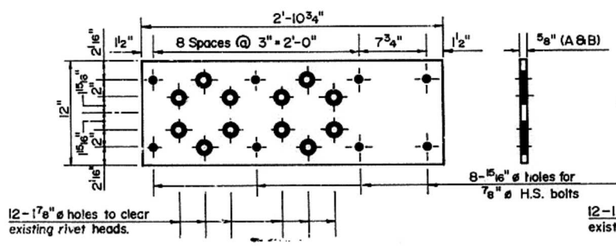

STOOL PLATE A
(4 Required)

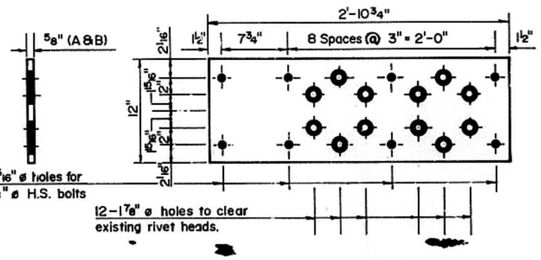

STOOL PLATE B
(4 Required)

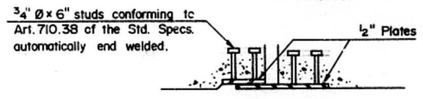

SECTION Y-Y

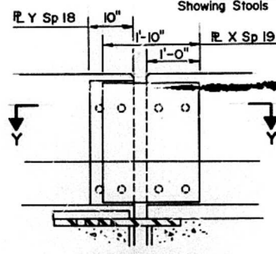

SECTION X-X

Bent Parapet Plates
Pier 18 - 2 sets reqd.
Pl. X = 22"x½"x2'-8"
Pl. Y = 10"x½"x2'-8"
4 - ¾" ø x 6" studs each plate

PIER 18 JOINT DETAILS
CEDAR STREET BRIDGE
F.A. RTE. 669 SEC. 103B-I-4(D)
PEORIA-TAZEWELL COUNTIES

MTA, INCORPORATED
DESIGNED G.B.W. CHECKED J.H.
DRAWN J.R., J.D.W. DATE 12-11-87 NO. 85-12

ROUTE NO	SECTION	COUNTY	TOTAL SHEETS	SHEET NO
F.A. 669	⊗	PEORIA TAZEWELL	82	59
FED ROAD DIST NO 7	ILLINOIS	PROJECT		
⊗103B-1-4(D)		SHEET 57 OF 70		

The furnishing and installation of two 4"Ø fiberglass downspouts complete with hangers and accessories shown in, but not limited to the drawings, is included in the contract item "Drainage System, Lump Sum". Drain pipe supports and methods of attachment shall meet the minimum requirements of industry standards and accepted engineering design standards, or as provided in the Special Provision. Welding of attachments to truss members must be approved by the Engineer.

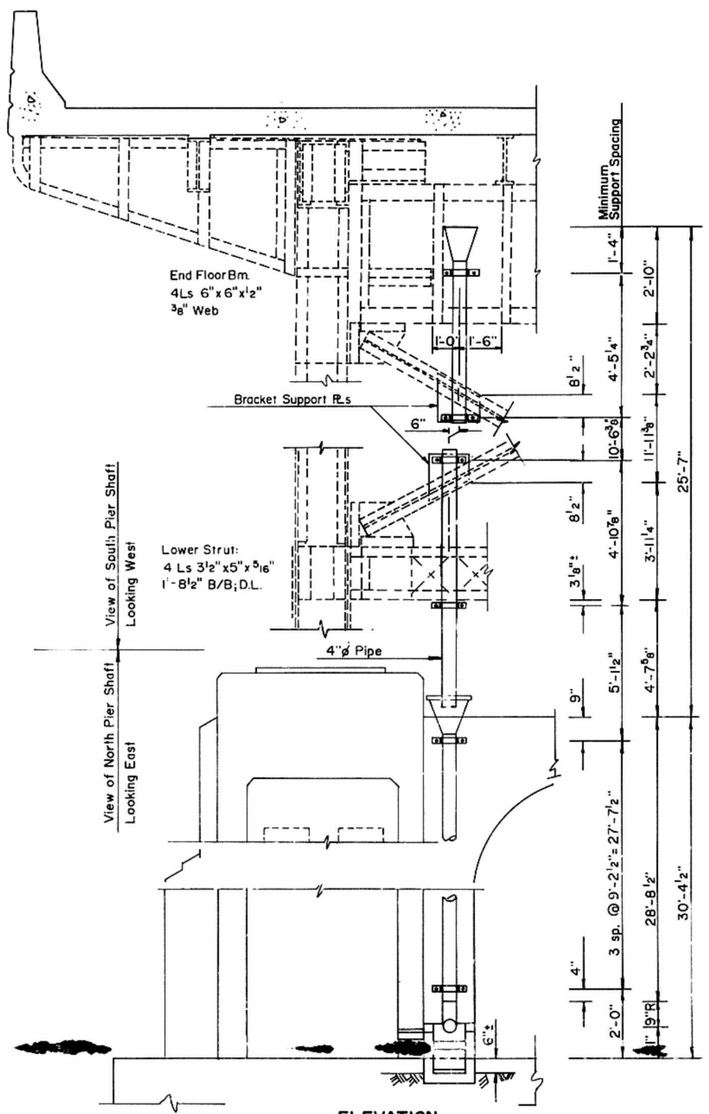

ELEVATION
Looking East or West as noted

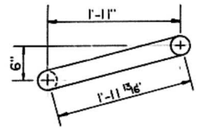

SEC. B-B

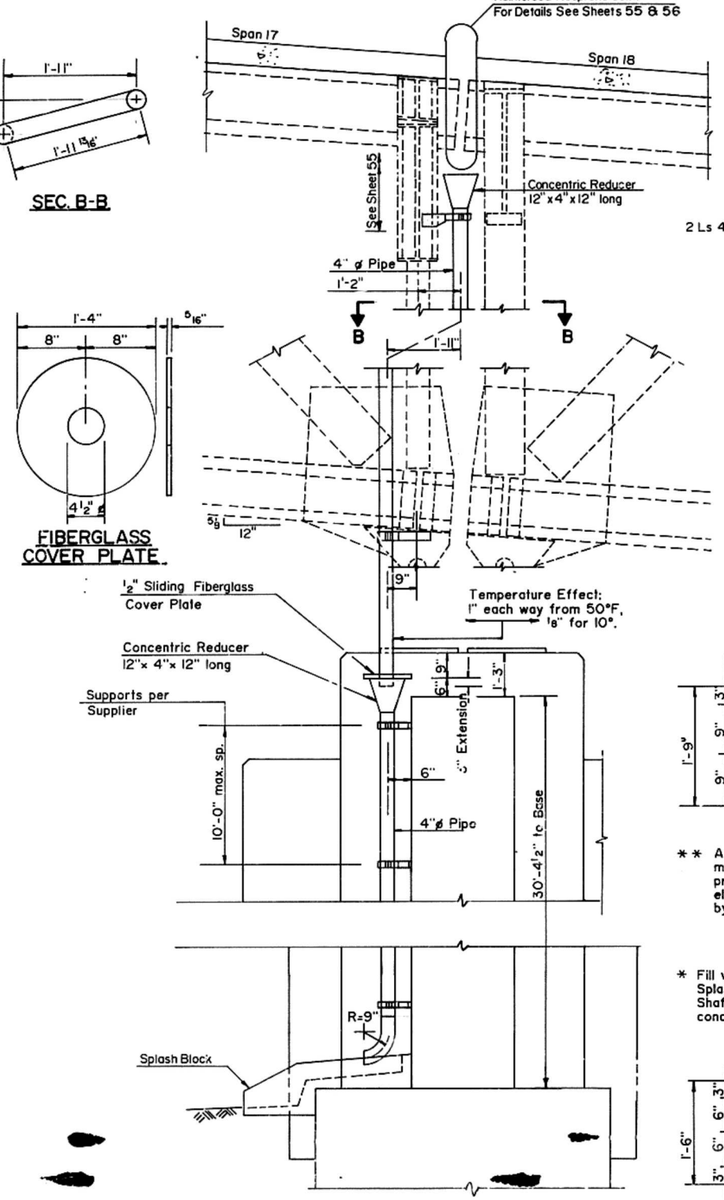

FIBERGLASS COVER PLATE

ELEVATION
Looking North

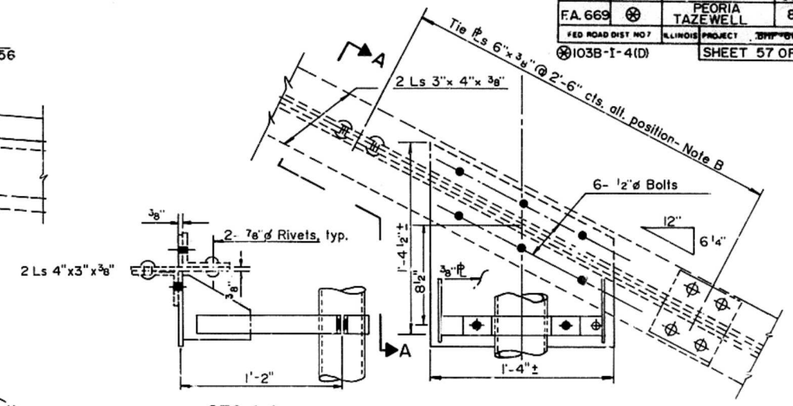

SEC. A-A

BRACKET SUPPORT PLATE

NOTE A- Bracket support PL is furnished as a suggestion and shall be modified as required to fit the support brackets supplied by the pipe supplier. Cost of furnishing and installation is incidental to lump sum cost for the Drainage System

NOTE B- Existing tie plates which interfere with the installation of the Support plates shall be removed and discarded, cost incidental.

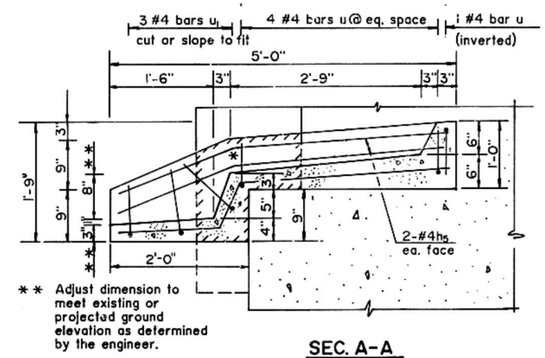

** Adjust dimension to meet existing or projected ground elevation as determined by the engineer.

SEC. A-A

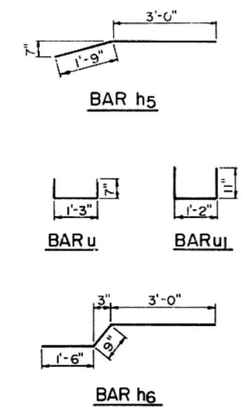

* Fill void between Splashblock and Pier Shaft with class X concrete.

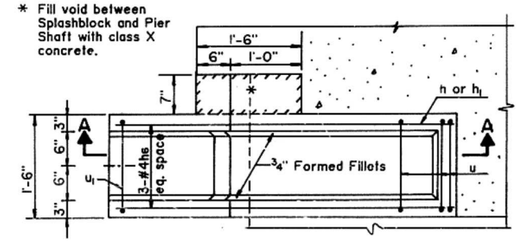

PLAN VIEW
SPLASH BLOCK
1-as shown, 1-opp. hand

BILL OF MATERIALS

Bar	No.	Size	Length	Shape
h_5	8	#4	4'-9"	
h_6	6	#4	5'-3"	
u	10	#4	2'-5"	
u_1	6	#4	3'-1"	
*** Drainage System			L.S.	ONE
Class X Concrete			Cu.Yds.	0.4
Reinforcement Bars			Lbs.	80

*** Includes all Fiberglass piping and supports at Pier 18.

PIER 18 DOWNSPOUT
Two required

PIER 18 DRAINAGE SYSTEM
CEDAR STREET BRIDGE
F.A. RTE. 669 SEC. 103B-1-4(D)
PEORIA TAZEWELL COUNTIES

MTA, INCORPORATED
DESIGNED G.B.M. CHECKED J.N.
DRAWN M.M. DATE 12-11-87 NO. 85-12

ROUTE NO	SECTION	COUNTY	TOTAL SHEETS	SHEET NO
FA 669	⊗	PEORIA TAZEWELL	82	60
FED ROAD DIST NO 7	ILLINOIS	PROJECT ~~BHF-369(-)~~		
⊗ 103B-I-4(D)		SHEET 58 OF 70		

Reinforcement bars designated "(E)" shall be epoxy coated.

Bars indicated thus: 2x3-#5 etc. indicate 2 lines of bars with 3 lengths per line.

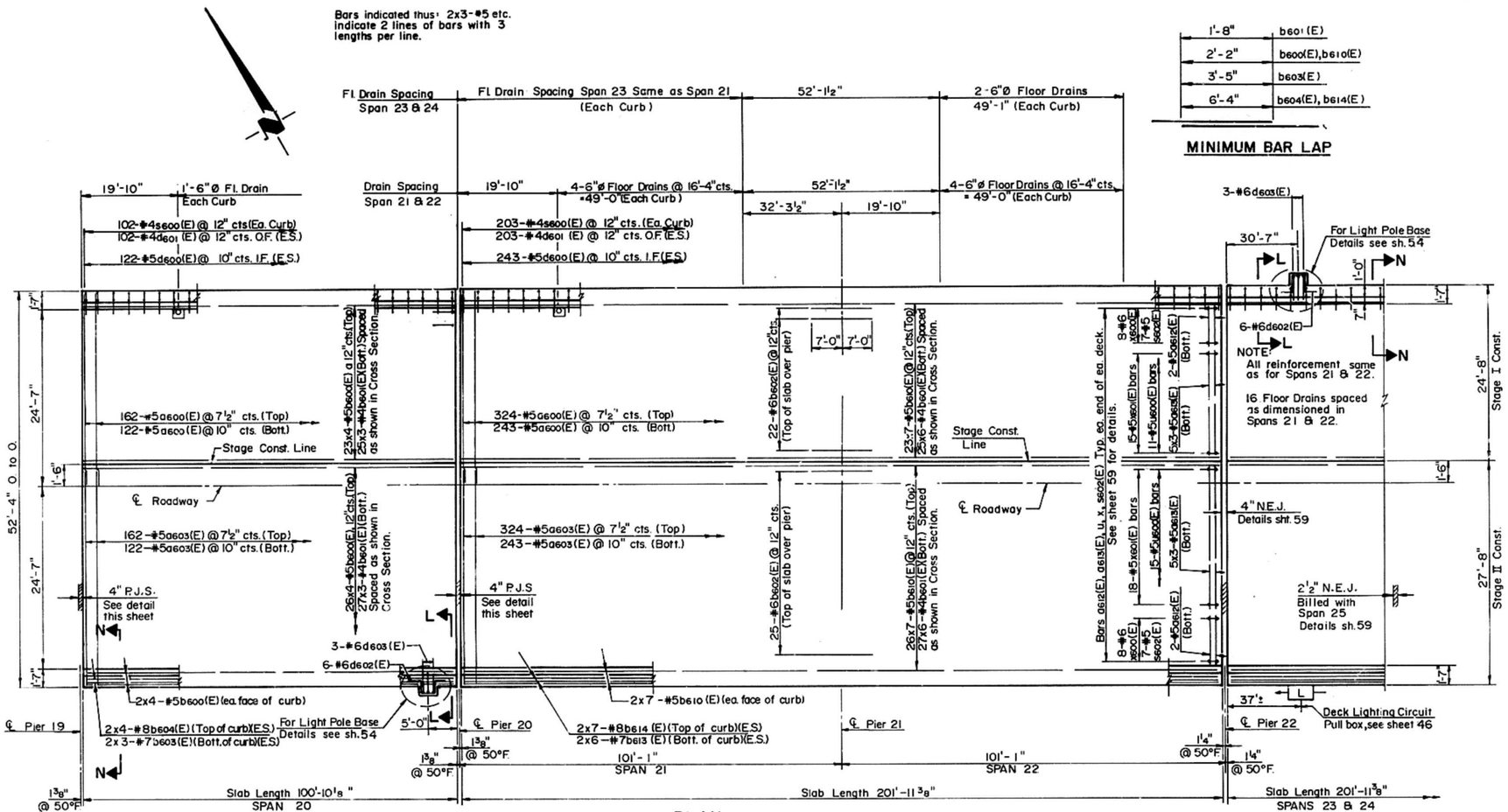

PLAN

MINIMUM BAR LAP

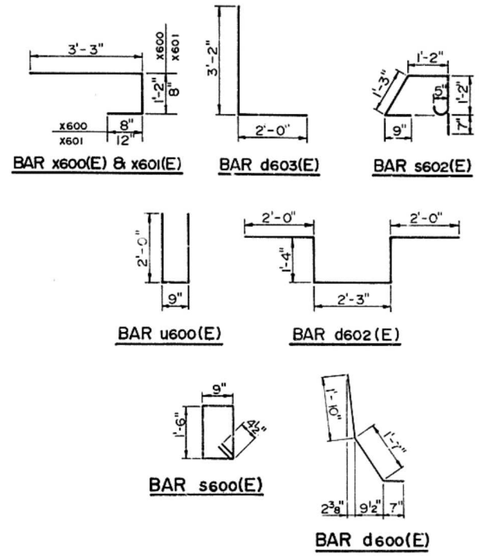

BILL OF MATERIAL ①

Bar	No.	Size	Length	Shape
a600(E)	1418	#5	26'-8"	——
a603(E)	1418	#5	27'-5"	——
a612(E)	24	#5	7'-6"	——
a613(E)	180	#5	4'-8"	——
b600(E)	212	#5	26'-9"	——
b601(E)	780	#4	35'-0"	——
b602(E)	94	#6	14'-0"	——
b603(E)	12	#7	35'-10"	——
b604(E)	16	#8	30'-0"	——
b610(E)	742	#5	30'-8"	——
b613(E)	48	#7	36'-6"	——
b614(E)	56	#8	34'-3"	——
d600(E)	1216	#5	4'-0"	L
d601(E)	1016	#4	2'-9"	——
d602(E)	12	#6	8'-11"	⊓
d603(E)	6	#6	5'-2"	L
e603(E)	240	#4	16'-1"	——
e604(E)	120	#4	17'-5"	——
s600(E)	1016	#4	5'-3"	⊡
s602(E)	84	#5	4'-11"	⊏⊐
u600(E)	156	#5	4'-9"	⊔
x600(E)	96	#6	5'-1"	⊐
x601(E)	198	#5	4'-11"	⊐
Reinf. Bars (Epoxy Coated)			Lbs.	159,430
Class X Concrete Superstr.			Cu. Yds.	773.2
Stud Shear Connectors **			Each	384
Preformed Jt. Seal (4")			Lin. Ft.	104
Neoprene Exp. Jt. (4")			Lin. Ft.	52
Structural Steel			Lbs.	3,960
~~Floor Drains~~			Each	[illegible]

**Shear Studs on stringer not included.
① Includes quantities for parapet.

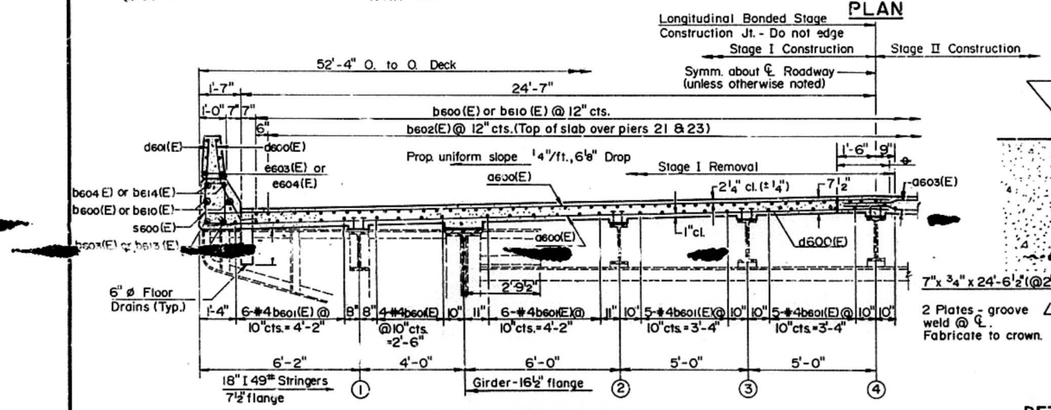

TYPICAL CROSS SECTION

Spans 20, 21, 22, 23, 24

◆ See Sheet 39

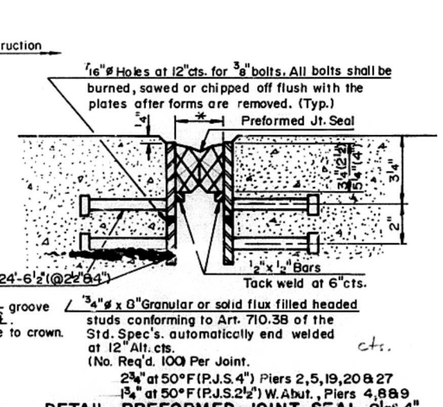

DETAIL PREFORMED JOINT SEAL, 2½", 4"

Note: After fabrication all surfaces of the steel plates shall be given one shop coat of paint specified for Structural Steel. Est. Wt. 4,980 lbs. per joint.

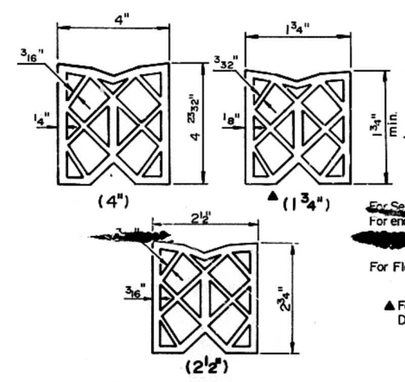

PREFORMED JOINT SEAL

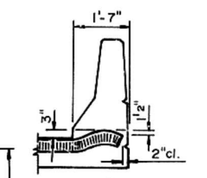

TYPICAL END OF SEAL TREATMENTS

For Section N-N See Sheet 47.
For end of deck details & parapets See Sh. 59
For Section L-L See Sheet 54

For Floor Drain Details See Sheet 44

▲ For 1¾" Preformed Joint Seal Details see sheet 59

PLAN SPANS 20-24
CEDAR STREET BRIDGE
F.A. RTE. 669 SEC. 103B-I-4(D)
PEORIA TAZEWELL COUNTIES

MTA, INCORPORATED

DESIGNED C.B.M. CHECKED J.N.
DRAWN C.S.L. DATE 12-11-87 NO. 85-12

ROUTE NO	SECTION	COUNTY	TOTAL SHEETS	SHEET NO
FA 669	⊗	PEORIA-TAZEWELL	82	61
FED ROAD DIST NO 7	ILLINOIS	PROJECT ~~SHF-669(-)~~		

⊗ 103B-I-4(D) SHEET 59 OF 70

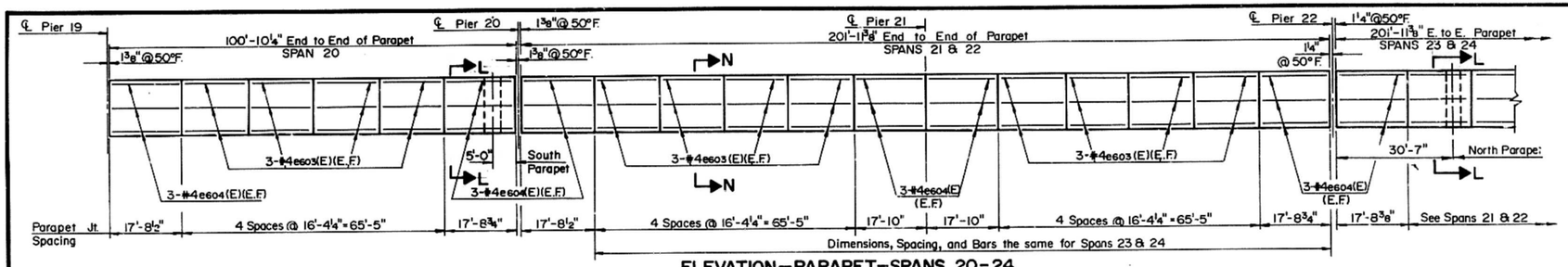

ELEVATION—PARAPET—SPANS 20-24

TABLE OF DIMENSIONS

PIER	A	B
8	1'-8½"	1'-5 11/16"
9	1'-5 11/16"	1'-3"
10,11,16-19	1'-3"	1'-3"
12	1'-3"	1'-6"
15	1'-6"	1'-3"
20-34W.	1'-0"	1'-0"

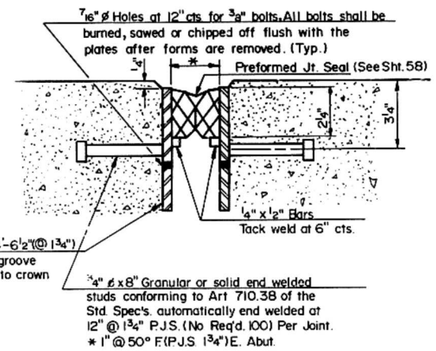

DETAIL PREFORMED JOINT SEAL, 1¾"

Note: After fabrication all surfaces of steel plates shall be given one shop coat of paint specified for Structural Steel. Est. Wt. = 1,450 lbs. @ E. Abut

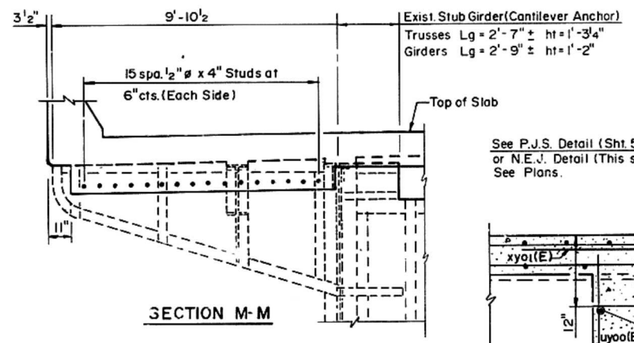

SECTION M-M

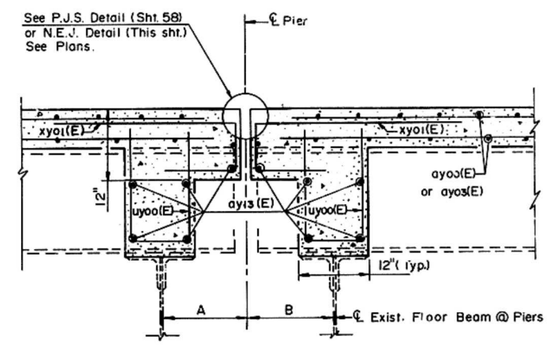

SECTION A-A

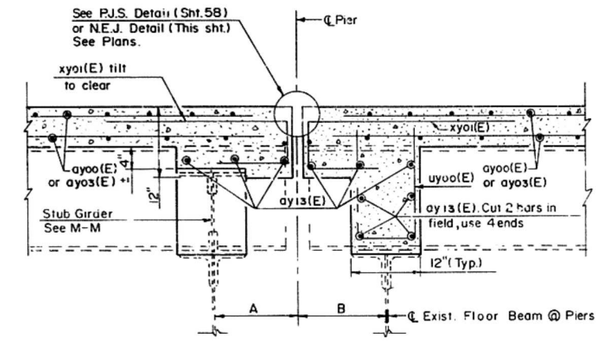

SECTION Z-Z

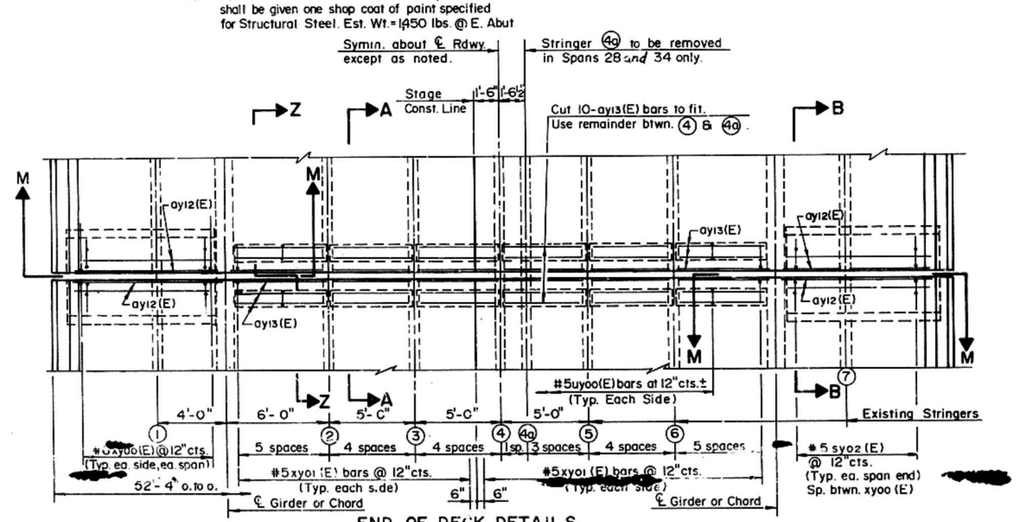

END OF DECK DETAILS

Note:
Bar bending diagrams shown on each plan sheet.

Y	SPANS	Y	SPANS
1	8 & 9	5	18-19
2	10-12	6	20-24
3	13-15	7	25-29
4	16 & 17	8	30-34

REINFORCEMENT BAR DESIGNATION

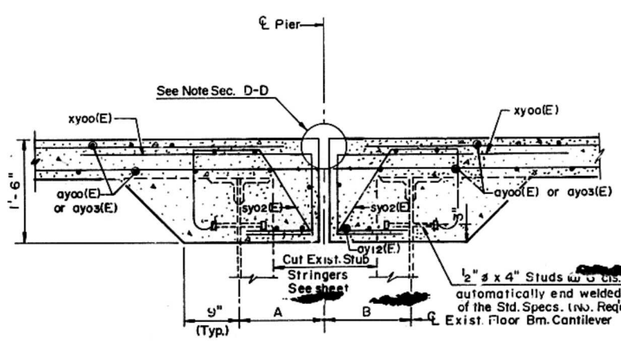

SECTION B-B

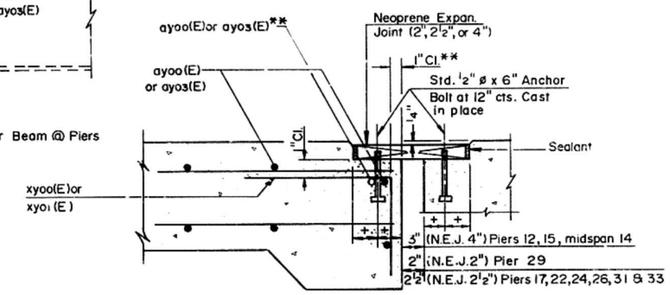

DETAIL - NEOPRENE EXPANSION JOINT

** Place ayoo(E) bars in back of anchor bolts as shown if required to maintain 1" Cl. (+0-⅛). Anchor bolts should be tied to ayoo(E) bars.

+ For dimensions & details see sheet 67

For Parapet Joint detail, see sheet 54.
For Sec. L-L, see sheet 54.
For Sec. N-N, see sheet 47

PARAPET SPANS 20-24
DETAILS SPANS 18-34
CEDAR STREET BRIDGE
F.A. RTE. 669 SEC. 103B-I-4(D)
PEORIA-TAZEWELL COUNTIES

MTA, INCORPORATED

DESIGNED G.B.M. CHECKED J.N.
DRAWN C.S.L. DATE 12-11-87 NO. 85-12

ROUTE NO	SECTION	COUNTY	TOTAL SHEETS	SHEET NO
FA.669	⊗	PEORIA TAZEWELL	82	62
FED ROAD DIST NO 7	ILLINOIS	PROJECT	BHF-669(-)	

⊗103B-I-4(D) SHEET 60 OF 70

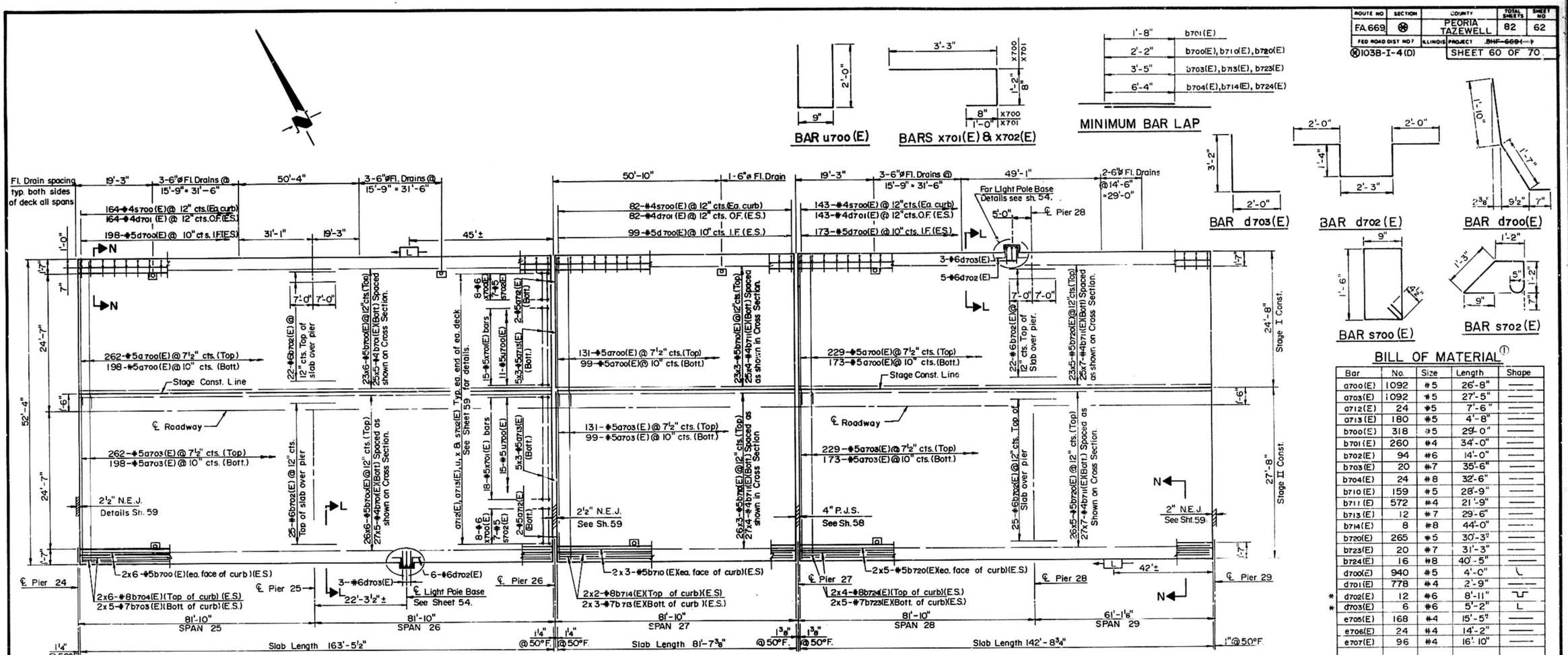

Bars indicated thus; 2 x 4-#9 etc., indicates two lines of bars with four lengths per line.

Bars designated (E) shall be epoxy coated.

* Bars d702(E) & d703(E) are included in Light Pole Base. See sheet 54.

** Shear Studs on stringers not included see Sht. 33

① Includes quantities for parapets.

For Parapets, see sheet 51.

For Sec. L-L, see sheet 54

For Sec. N-N, see sheet 47.

For end of deck details, see sheet 59.

For Pull/Junction Box notes, see sheet 46.

BILL OF MATERIAL ①

Bar	No.	Size	Length	Shape
a700(E)	1092	#5	26'-8"	
a703(E)	1092	#5	27'-5"	
a712(E)	24	#5	7'-6"	
a713(E)	180	#5	4'-8"	
b700(E)	318	#5	29'-0"	
b701(E)	260	#4	34'-0"	
b702(E)	94	#6	14'-0"	
b703(E)	20	#7	35'-6"	
b704(E)	24	#8	32'-6"	
b710(E)	159	#5	28'-9"	
b711(E)	572	#4	21'-9"	
b713(E)	12	#7	29'-6"	
b714(E)	8	#8	44'-0"	
b720(E)	265	#5	30'-3"	
b723(E)	20	#7	31'-3"	
b724(E)	16	#8	40'-5"	
d700(E)	940	#5	4'-0"	
d701(E)	778	#4	2'-9"	
* d702(E)	12	#6	8'-11"	
* d703(E)	6	#6	5'-2"	
e705(E)	168	#4	15'-5"	
e706(E)	24	#4	14'-2"	
e707(E)	96	#4	16'-10"	
s700(E)	778	#4	5'-3"	
s702(E)	84	#5	4'-11"	
u700(E)	156	#5	4'-9"	
x700(E)	96	#6	5'-1"	
x701(E)	198	#5	4'-11"	
Rein. Bars (Epoxy Coated)			Lbs.	124,090
Class X Concrete Superstr.			Cu. Yds.	590.4
Neoprene Exp. Jt. (2")			Lin. Ft.	52
Neoprene Exp. Jt. (2½")			Lin. Ft.	104
Preformed Jt. Seal (4")			Lin. Ft.	52
Stud Shear Connectors **			Each	384
Structural Steel			Lbs.	1980
Floor Drains			Each	24

PLAN SPANS 25-29
CEDAR STREET BRIDGE
F.A. RTE. 669 SEC. 103B-I-4(D)
PEORIA TAZEWELL COUNTIES

MTA, INCORPORATED

DESIGNED G.B.M. CHECKED J.N.
DRAWN J.D.W. DATE 12-11-67 no. 85-12

ROUTE NO	SECTION	COUNTY	TOTAL SHEETS	SHEET NO
F.A.669	⊛	PEORIA TAZEWELL	82	63
FED ROAD DIST NO 7	ILLINOIS	PROJECT ~~BHF-669-1~~		
⊛ 103B-I-4(D)		SHEET 61. OF 70		

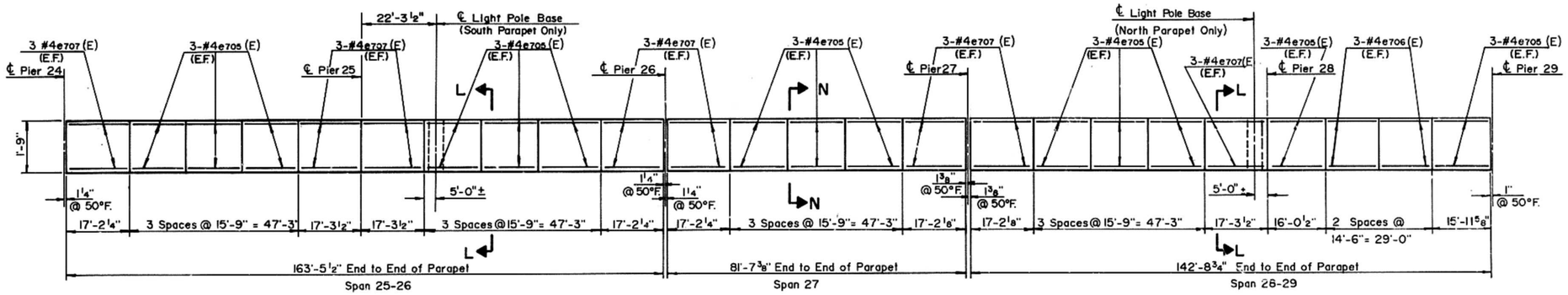

ELEVATION-PARAPET SPANS 25-29

See. Sheet 60

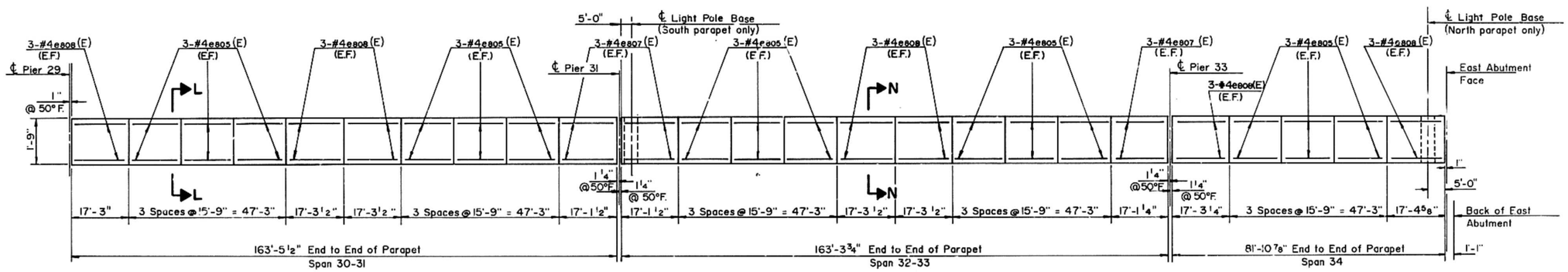

ELEVATION - PARAPET SPANS 30-34

See Sheet 62

For Parapet Joint details, see sheet 54.
For Sec. L-L, See Sheet 54.
For Sec. N-N, See Sheet 47.

PARAPET - SPANS 25-34
CEDAR STREET BRIDGE
F.A. RTE. 669 SEC. 103B-I-4(D)
PEORIA TAZEWELL COUNTIES

MTA, INCORPORATED

DESIGNED C.B.M. CHECKED J.N.
DRAWN M.M DATE 12-11-87 No. 85-12

ROUTE NO	SECTION	COUNTY	TOTAL SHEETS	SHEET NO
F.A.669	⊕	PEORIA TAZEWELL	82	64
FED ROAD DIST NO 7	ILLINOIS	PROJECT ~~BHF-669-1~~		

⊕ 103B-I-4(D) SHEET 62 OF 70

Bars indicated thus: 2x3 #5 etc. indicate 2 lines of bars with 3 lengths per line.

Reinforcement bars designated (E) shall be epoxy coated.

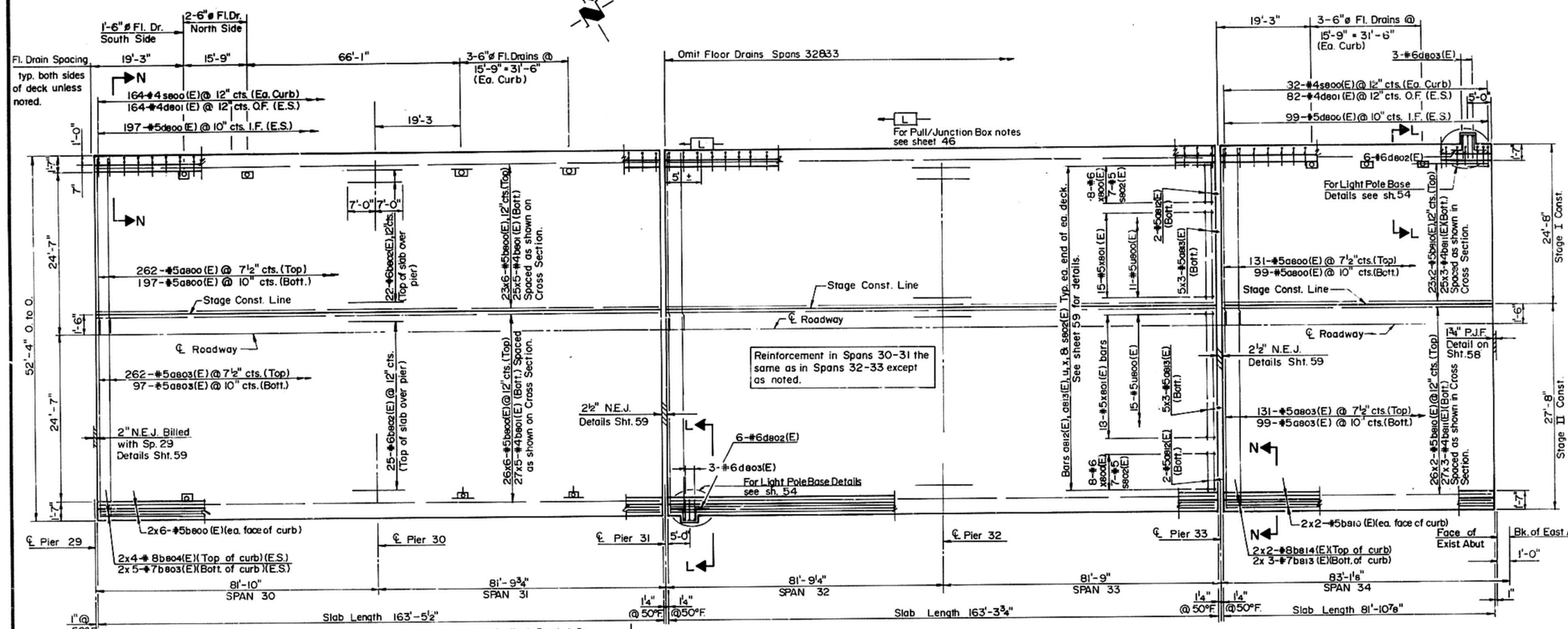

PLAN

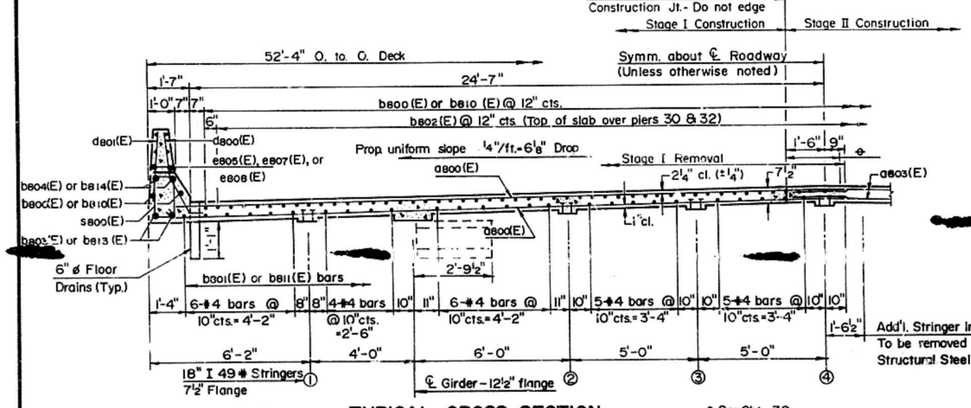

TYPICAL CROSS SECTION

Spans 30, 31, 32, 33, 34

◆ See Sht. 39

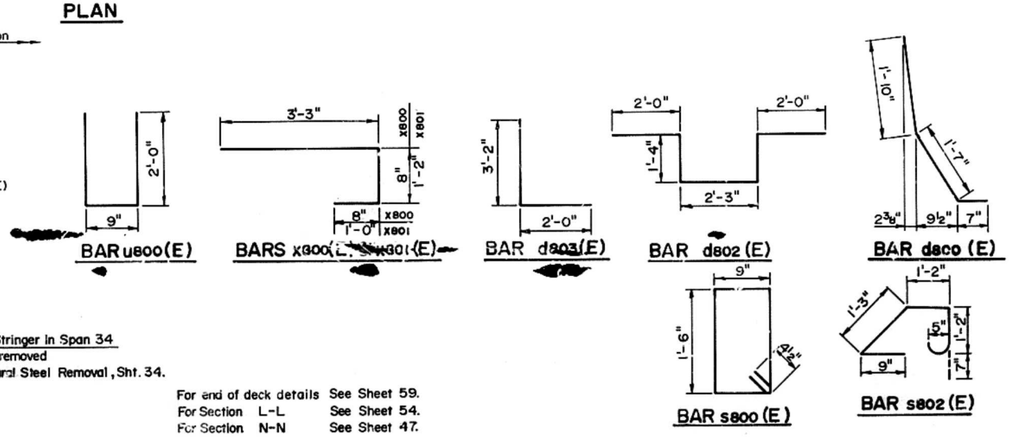

For end of deck details See Sheet 59.
For Section L-L See Sheet 54.
For Section N-N See Sheet 47.

For Floor Drain details See Sheet 44.

1'-8"	b801(E)
2'-2"	b800(E), b810(E)
3'-5"	b803(E), b813(E)
6'-4"	b804(E), b814(E)

MINIMUM BAR LAP

① Includes quantities for parapets on Spans 30-34. See sheet 61.

BILL OF MATERIAL ①

Bar	No.	Size	Length	Shape
a800(E)	1148	#5	26'-8"	
a803(E)	1148	#5	27'-5"	
a812(E)	24	#5	4'-6"	
a813(E)	180	#5	4'-8"	
b800(E)	636	#5	29'-0"	
b801(E)	520	#4	34'-0"	
b802(E)	94	#6	14'-0"	
b803(E)	40	#7	35'-6"	
b804(E)	32	#8	45'-7"	
b810(E)	106	#5	41'-10"	
b811(E)	156	#4	28'-4"	
b813(E)	12	#7	29'-6"	
b814(E)	8	#8	43'-11"	
d800(E)	986	#5	4'-0"	
d801(E)	820	#4	2'-9"	
d802(E)	12	#6	8'-11"	
d803(E)	6	#6	5'-2"	
e805(E)	180	#4	15'-5"	
e807(E)	36	#4	16'-10"	
e808(E)	84	#4	17'-0"	
s800(E)	820	#4	5'-3"	
s802(E)	84	#5	4'-11"	
u800(E)	156	#5	4'-9"	
x800(E)	96	#6	5'-1"	
x801(E)	198	#5	4'-11"	
Reinf. Bars (Epoxy Coated)			Lin. Ft.	129,680
Class X Concrete Superstr.			Cu. Yds.	621.9
Preformed Jt. Seal (1¾")			Lin. Ft.	52
Neoprene Exp. Jt. (2½")			Lin. Ft.	104
Stud Shear Connectors **			Each	384
Structural Steel			Lbs.	1450
Floor Drains			Each	15

** Shear Studs on stringers not included.

PLAN SPANS 30-34
CEDAR STREET BRIDGE
F.A. RTE. 669 SEC. 103B-I-4(D)
PEORIA TAZEWELL COUNTIES

MTA, INCORPORATED

DESIGNED G.B.M. CHECKED J.N.
DRAWN J.W. DATE 12-11-87 NO. 85-12

ROUTE NO	SECTION	COUNTY	TOTAL SHEETS	SHEET NO
F.A.669	⊗	PEORIA TAZEWELL	82	65
FED ROAD DIST NO 7	ILLINOIS	PROJECT ~~BHF-669(-)~~		
⊗103B-I-4(D)		SHEET 63 OF 70		

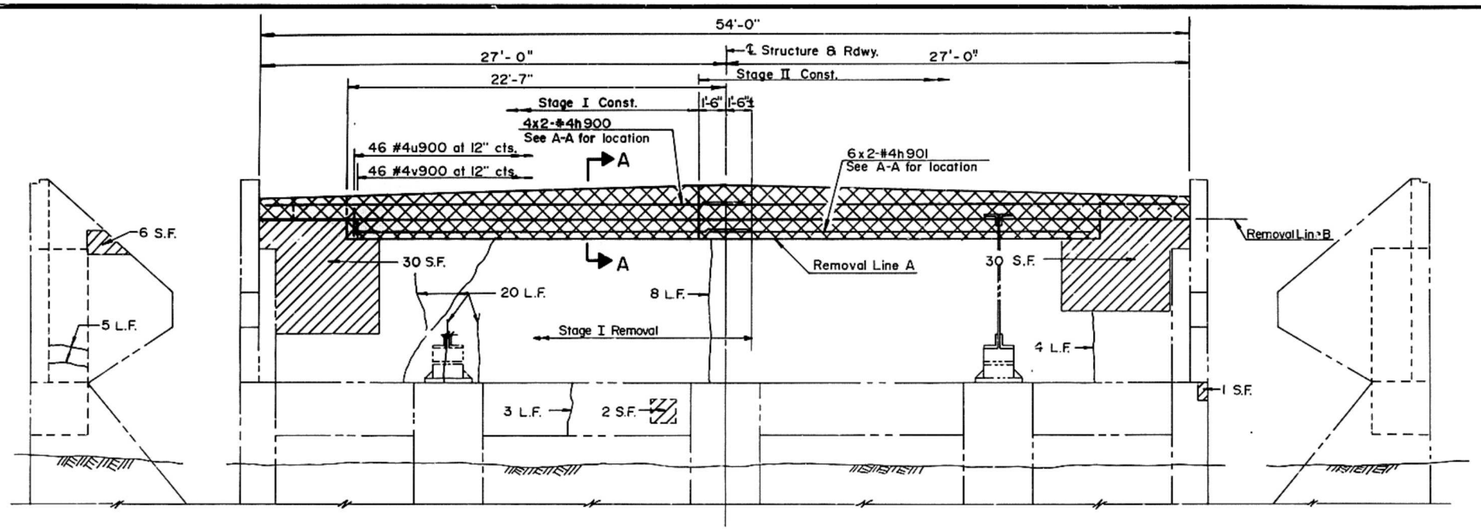

NORTH WING

EAST ABUTMENT
(Looking East)

SOUTH WING

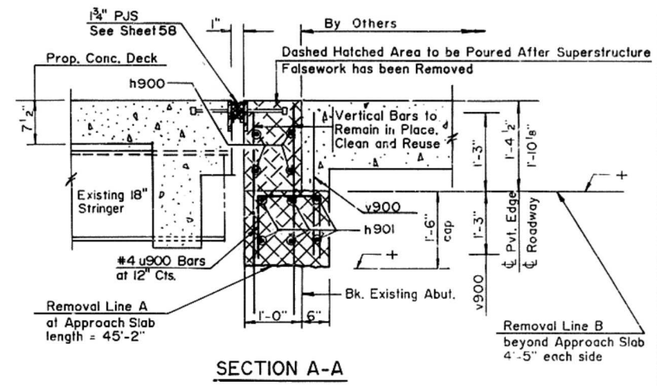

SECTION A-A

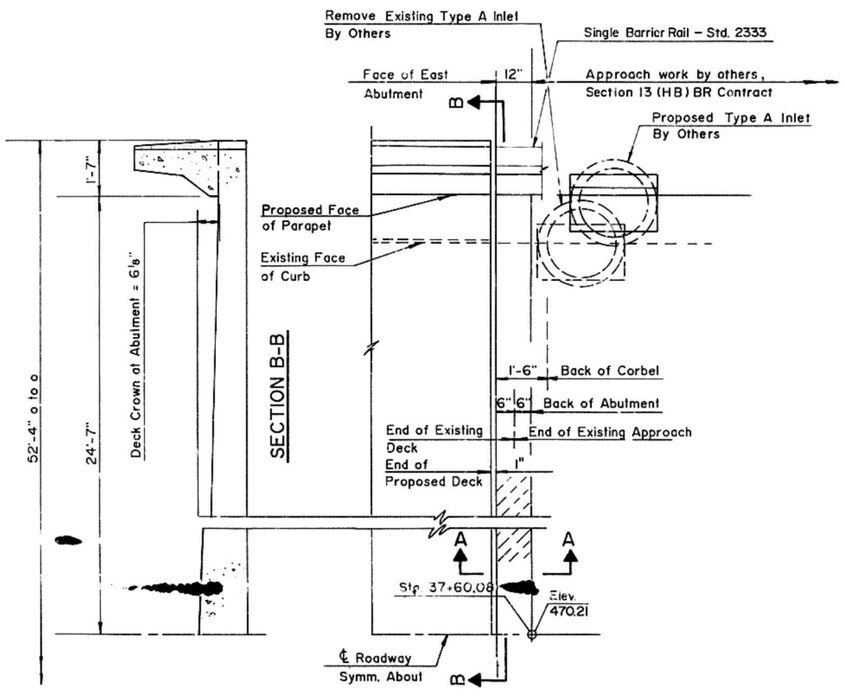

HALF PLAN - EAST APPROACH

+ Bonded Construction Joint in accordance with Article 504.13(a)(2) of the Standard Specs.

Formed Approach Seat and Approach Block Bill as Conc. Removal & Class X Conc.

* Formed Conc. repair, min. Depth 3"; Bill as Conc. Removal & Class X Conc.

Open Cracks to be Epoxy Filled

* Where removal and replacement of deteriorated concrete on face of abutment and wings is required the contractor shall reinforce the new concrete with 2"× 2" No. 4 gauge welded wire fabric anchored to existing concrete by means of ¼"ϕ expansion hook bolts spaced 30" max. in each direction. See Special Provisions.

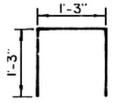

u900

See Richland Bridge Roadway Plans, Section 13(HB) BR, for details and quantities of Approach Pay Items.

Min lap h900 & h901 = 1'-8"

EAST ABUT. BILL OF MATERIAL

Bar	No.	Size	Length	Shape
h900	8	#4	28'-6"	——
h901	12	#4	24'-0"	——
u900	46	#4	3'-9"	⊓
v900	46	#5	2'-6"	——

Item	Unit	Quantity
Concrete Removal	Cu.Yds.	6.5
Class X Concrete	Cu.Yds.	6.4
Reinforcement Bars	Lbs.	580
Epoxy Crack Sealing	Lin. ft.	40

EAST APPROACH
EAST ABUTMENT
CEDAR STREET BRIDGE
F.A. RTE. 669 SEC. 103B-I-4(D)
PEORIA TAZEWELL COUNTIES

MTA, INCORPORATED

DESIGNED J.N. CHECKED G.B.M.
DRAWN M.M. DATE 12-11-87 NO. 85-12

ROUTE NO	SECTION	COUNTY	TOTAL SHEETS	SHEET NO
F.A.669	⊛	PEORIA TAZEWELL	82	66
FED ROAD DIST NO 7	ILLINOIS	PROJECT ~~BHF-6691~~		
⊛ 103B-I-4(D)		SHEET 64 OF 70		

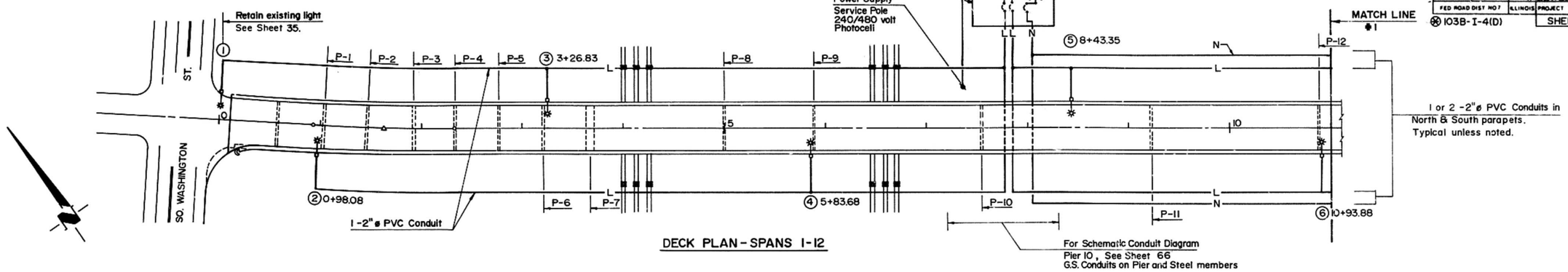

DECK PLAN - SPANS 1-12

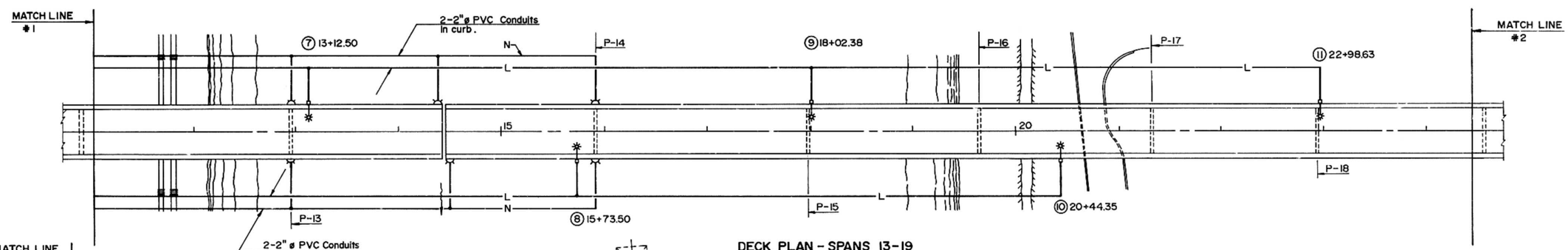

DECK PLAN - SPANS 13-19

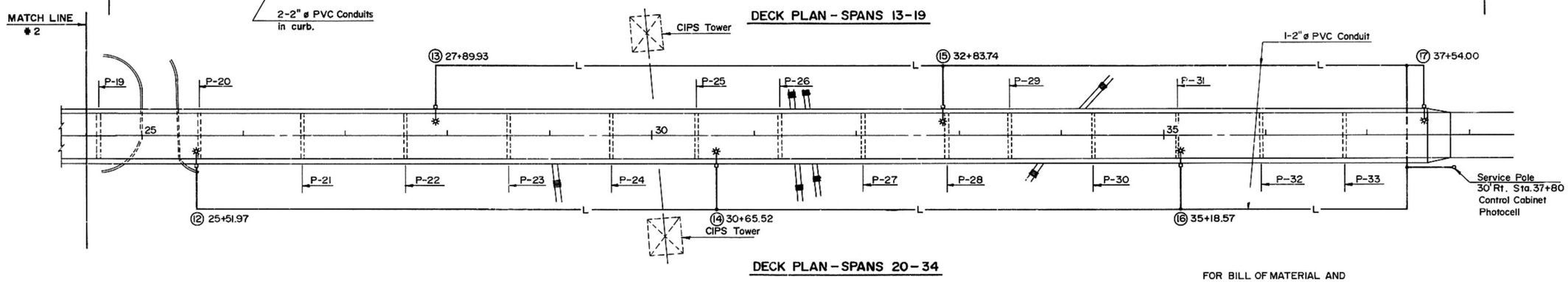

DECK PLAN - SPANS 20-34

—L— = Bridge Roadway Lighting System
① thru ⑰, New poles ② thru ⑰ Note 1
—N-- = Navigation Lighting System Note 2

FOR BILL OF MATERIAL AND NOTES 1 THRU 7 SEE SHEET 65.

ELECTRICAL PLAN
CEDAR STREET BRIDGE
F.A. RTE. 669 SEC. 103B-I-4(D)
PEORIA-TAZEWELL COUNTIES

MTA, INCORPORATED

DESIGNED J.N. CHECKED C.B.M.
DRAWN J.D.W. DATE 12-11-87 NO. 85-12

ROUTE NO	SECTION	COUNTY	TOTAL SHEETS	SHEET NO
F.A. 669	⊛	PEORIA TAZEWELL	82	67
FED ROAD DIST NO 7	ILLINOIS	PROJECT BHF-669(-)		
⊛ 103B-I-4(D)		SHEET 65 OF 70		

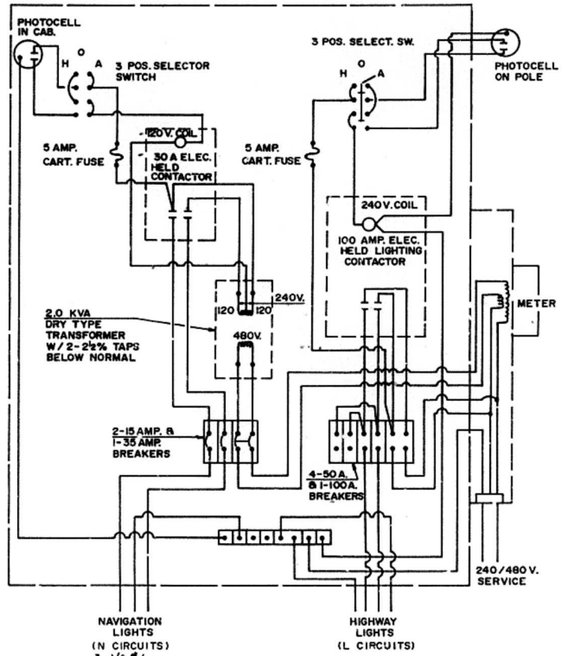

CONTROL PANEL NEAR PIER 10

See Note 6

NOTES - BRIDGE ELECTRICAL WORK

SEE SHEET 64

NOTE 1: POWER FOR THE BRIDGE ROADWAY LIGHTING SYSTEM IS SUPPLIED FROM TWO SERVICE SOURCES, ONE NEAR PIER 10, THE OTHER NEAR THE EAST ABUTMENT.

NOTE 2: THIS CONTRACT INCLUDES THE REWIRING OF A COMPLETE LIGHTING SYSTEM INCLUDING, BUT NOT LIMITED TO, PROVIDING SERVICE FROM EXISTING CONTROL CABINETS TO SIXTEEN (16) PROPOSED LIGHT POLES, ONE (1) EXISTING LIGHT POLE AND SIX (6) NAVIGATION LIGHTS, REPLACED IN A PRECEEDING CONTRACT.

NOTE 3: PAYMENT FOR THE PROPOSED HIGHWAY LIGHTING REWIRING IS PROVIDED FOR IN BID ITEMS FOR GALVANIZED STEEL AND PVC CONDUITS AND ELECTRIC CABLE. NAVIGATION LIGHTING IS ON A L. SUM BASIS.

NOTE 4: IMBEDED CONDUITS IN PARAPET CURB BLOCKS SHALL BE 2" DIA. PVC PIPE, SCHEDULE 40, OR APPROVED SUBSTITUTE, UNLESS OTHERWISE DESIGNATED. CONDUITS NOT PROTECTED BY CONCRETE SHALL BE GALVANIZED STEEL OF A SIZE SHOWN IN THE PLANS.

NOTE 5: PAYMENT FOR FURNISHING AND INSTALLING JUNCTION BOXES, CONDULETS, HANGERS, ATTACHMENT DEVICES, EXPANSION SLEEVES, PULL BOXES AND ACCESSORIES REQUIRED BY THE NATIONAL ELECTRIC CODES AND/OR SHOWN IN, BUT NOT LIMITED TO THE PLANS, IS INCIDENTAL TO THE COST OF THE APPROPRIATE CONDUIT, LINEAL FEET.

NOTE 6: MODIFICATION OF EXISTING CONTROL CABINET TO REPLACE EXISTING OVERHEAD WIRING CONNECTION TO PIER 10 WITH BURIED GALVANIZED STEEL CONDUIT CONNECTION IS BILLED AS "MODIFY EXISTING CONTROL INSTALLATION, EACH".

NOTE 7: REHABILITATION OF EXISTING LIGHT POLE AT WEST APPROACH INCLUDES ITEM "ADJUST EXISTING LIGHT STANDARD", INSTALLATION OF 150 WATT LUMINARE AND REWIRING WITHIN THE POLE.

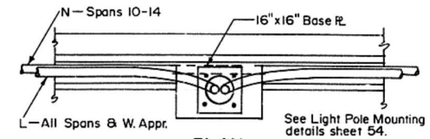

PLAN

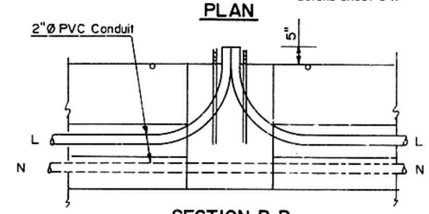

SECTION B-B

LIGHT POLE CONDUIT INSTALLATION

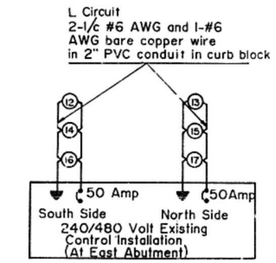

BRIDGE LIGHTING

Proposed Wiring Diagram

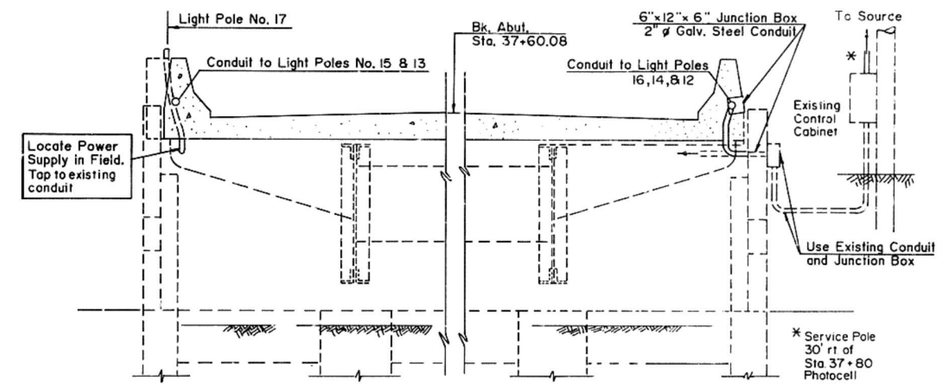

EAST ABUTMENT CONNECTIONS

HIGHWAY LIGHTING

BILL OF MATERIAL (See Sheet 64 of 70)

	ITEM	UNIT	QUANTITY
*	Electrical Cable in Conduit, 600 V (XLP-Type USE) 1/C NO. 12	Lin. Ft.	1734
**	ELCBL C 600V (XLP) 1/C NO. 6	Lin. Ft.	13,510
**	Bare Copper Wire, 1/C NO. 6	Lin. Ft.	6746
	Conduit in Trench, 2" Dia. Galvanized Steel	Lin. Ft.	54
	Conduit Attached to Structure, 2" Dia. Galv. Steel	Lin. Ft.	144
	Conduit Attached to Structure, 2" Dia. PVC	Lin. Ft.	6,440
	Light Pole Aluminum, 45' M.H. 6 Ft. Davit Arm	Each	16
	Luminare, Sodium Vapor, Rectilinar Type 150 Watt	Each	One
	Luminare, Sodium Vapor, Rectilinar Type 250 Watt	Each	16
	Removal of Existing Lighting System, Complete	Lump Sum	One
	Modify Existing Control Installation	Each	One
	Adjust Existing Light Standard	***	***

* Internal wiring in 17 light poles, 2-1/C #12.
** L circuit (2-1/C #6 & 1/C #6 bare)

*** Included with West Approach Quantities, see Note 7, also sheet 36.

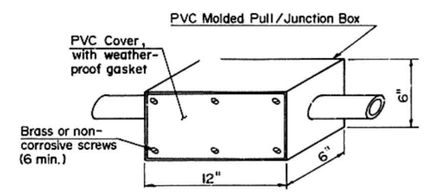

PULL/JUNCTION BOX

Outside Parapet Curb Installation
L & N Circuits

For box locations see Deck Plan Sheets

Work this sheet with sheets 63 and 64.

CIRCUIT IDENTIFICATION
L = Bridge Roadway Lighting
N = Navigation Lighting

WIRING DETAILS
NOTES, BILL OF MATERIAL AND EAST ABUTMENT
CEDAR STREET BRIDGE
F.A. RTE. 669 SEC. 103B-I-4(D)
PEORIA TAZEWELL COUNTIES

MTA, INCORPORATED

DESIGNED JN. CHECKED GBM
DRAWN M.M. DATE 12-11-87 NO. 85-12

Rev 1-27-88

ROUTE NO	SECTION	COUNTY	TOTAL SHEETS	SHEET NO
F.A.669	⊗	PEORIA TAZEWELL	82	68
FED ROAD DIST NO 7	ILLINOIS	PROJECT	~~CNT-0081-1~~	
⊗103B-I-4(D)		SHEET 66 OF 70		

Truss Members:
Lo-Uo: 4 Ls 6"x4"x7/16" S.L., 3/8" Tie Pl. 1'-7½" %
Lo-Lo': 4 Ls 5"x3½"x9/16" DL & 3/8" Tie Pls 1'-8½" %
Lo-Uo': 2 Ls 3"x4"x5/16" 3/8" Tie Pls

Note 1 Conduit supports may be attached to the above members and the end 4'-0" of the Floor Beam Girder (Uo-Uo') by welding. Attachments in other areas shall be clamped, bolted or welded in a manner approved by the Engineer.

Note 2 Conduit hangers and methods of attachment shall meet the requirements of industry standards or as provided by the plans or Special Provisions

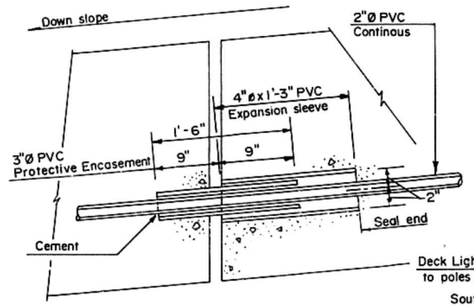

PROPOSED EXPANSION INSTALLATION
W.ABUT and PIERS

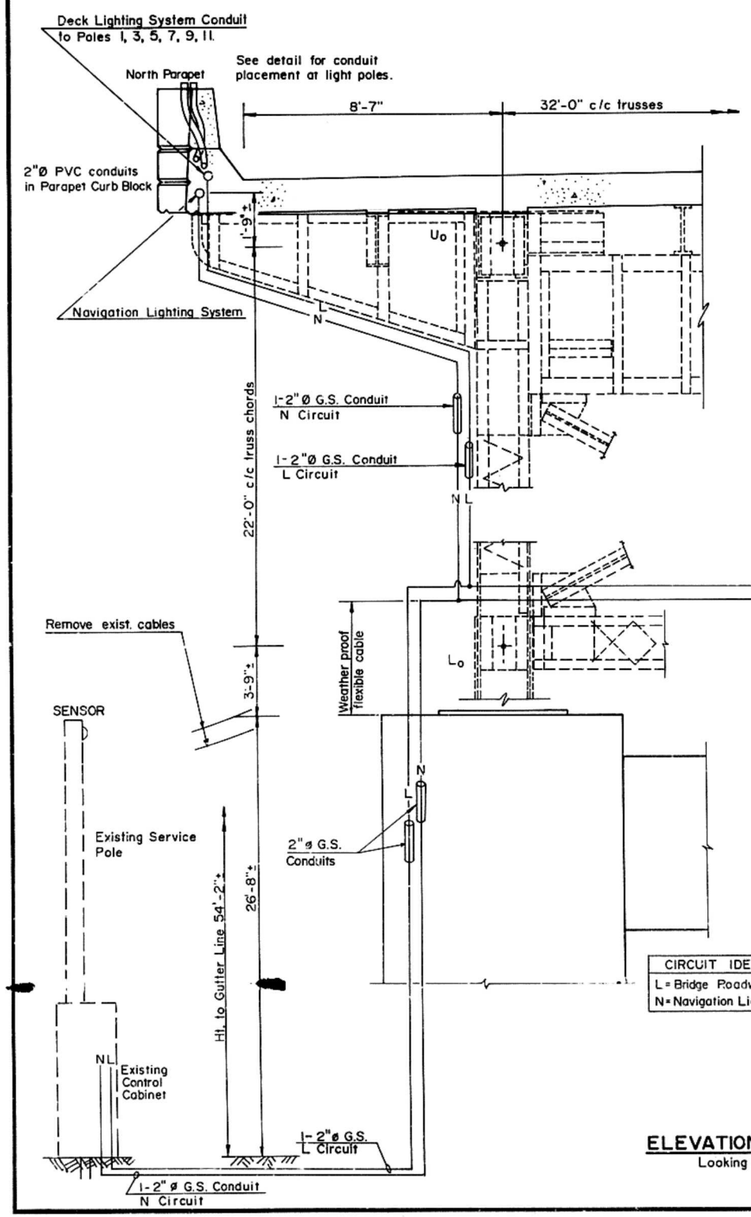

ELEVATION-PIER 10
Looking East

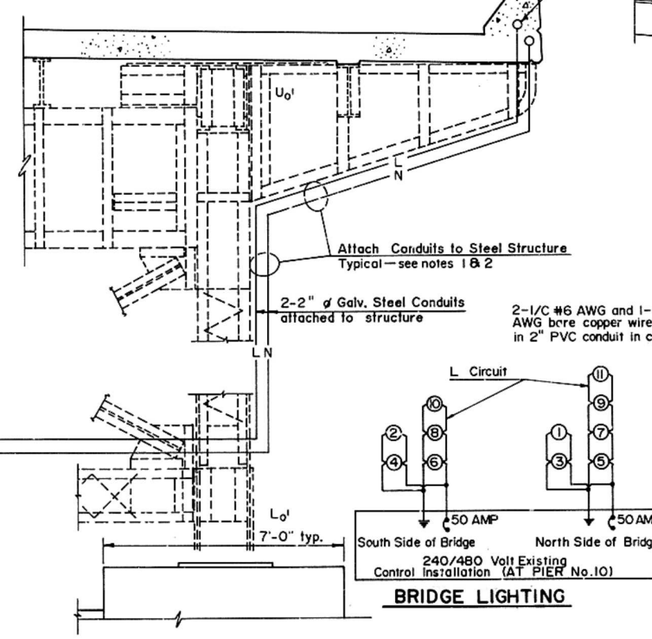

BRIDGE LIGHTING

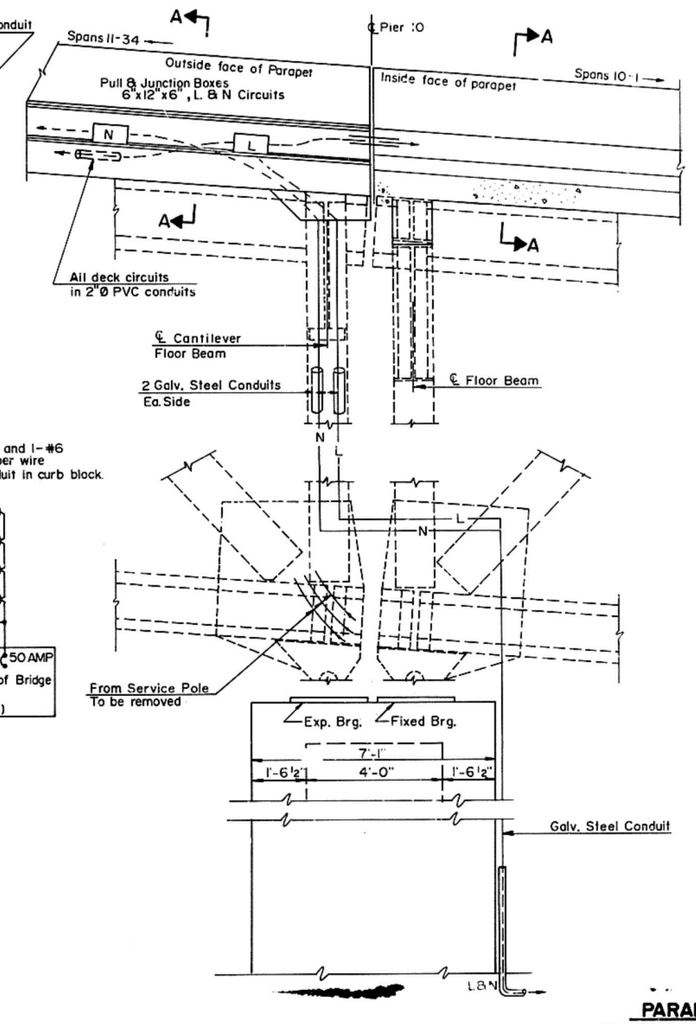

END VIEW
Looking South

CIRCUIT IDENTIFICATION
L = Bridge Roadway Lighting
N = Navigation Lighting

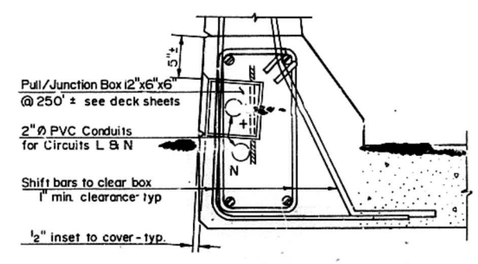

SECTION A-A
PARAPET CURB BLOCK

+ Holes, 1'-6" x 1'-0" may be cut in webs of Parapet Beams (Spans 1-7) to facilitate Pull/Junction Box placement.

Work this sheet with sheets 64 & 65.

PARAPET CONDUIT DETAILS
SCHEMATIC WIRING LAYOUT - PIER 10
CEDAR STREET BRIDGE
F.A. RTE. 669 SEC. 103B-I-4(D)
PEORIA TAZEWELL COUNTIES

MTA, INCORPORATED

DESIGNED J.N. CHECKED G.B.M.
DRAWN M.M. DATE 12-11-87 NO. 85-12

ROUTE NO	SECTION	COUNTY	TOTAL SHEETS	SHEET NO
FA669	⊗	PEORIA TAZEWELL	82	69
FED ROAD DIST NO 7	ILLINOIS	PROJECT	~~BRF-669(~~	

⊗ 103B-1-4(D)

SHEET 67 OF 70

Joint Size	"C" at 50°F	"D" at 50°F
2	2"	1½" min.
2½	2½"	1¾" min.
4	3"	2½" min.

INSTALLATION NOTES

Use anchor blocks and continuous seal as anchor bolt location templates.

1. Install sponge mandrels into positions shown to form flap convolution
2. Install parapet or sidewalk piece (trim roadway flap to fit before applying epoxy).
3. Install continuous seal in roadway.
4. Install anchor blocks as indicated.

NOTE A_ Maximum spacing of anchor bolts shall be 12" centers

SKEW LIMITATIONS

The details of the anchor blocks and the elastomeric membrane in the parapet, as shown, are for up to 50° skews.

For skews greater than 50°, the anchor blocks and the elastomeric membrane, installed in accordance with dimension "D", might require modifications to insure a minimum clearance of 1½" from centerline of anchor studs to edge of parapet opening. The anchor blocks and the elastomeric membrane shall also be installed to the top of the parapet with the anchor studs spaced at ±12" cts

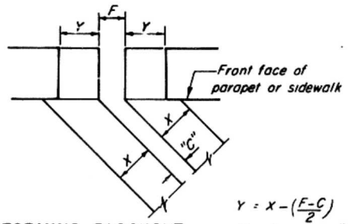

FORMING BLOCKOUT SKETCH

$Y = X - \left(\frac{F-C}{2}\right)$

For dimension "F" see sheet #

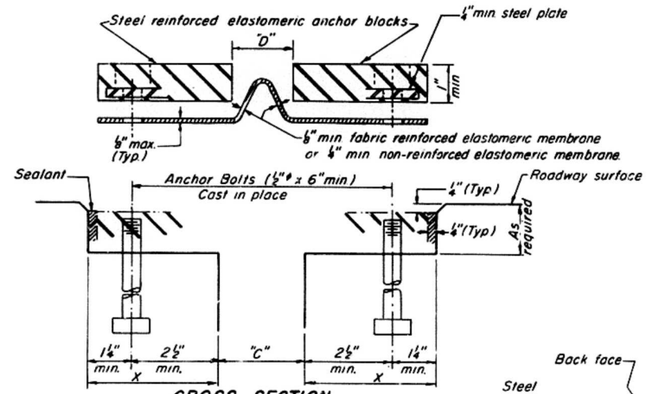

CROSS SECTION

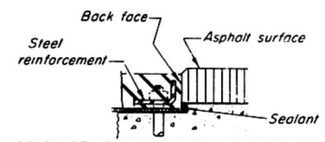

ANCHOR BLOCK REINFORCEMENT with ASPHALT SURFACE

GENERAL NOTES

Continuous Seal Neoprene Expansion Joint shall consist of molded anchor blocks of elastomer and steel, field assembled over continuous lengths of elastomeric membrane. See Special Provisions.

The elastomeric membrane shall be premolded with a single or a double upward convolution that will have a "memory" to return to its molded position upon joint closure.

The steel reinforcement must extend up the back face of anchor blocks when asphalt surfaces are used but is optional in concrete blockout.

The convolution length shall be such that the extended length will not be greater than the manufactured length when the joint is fully expanded in its design range and will not protrude above the anchor blocks when the joint is fully compressed.

Joint openings shall be adjusted in accordance with Article 503.07(c) of the Standard Specifications when the deck is poured at an ambient temperature other than 50°F.

The parapet and sidewalk flaps may be furnished factory vulcanized to the roadway membrane provided the centerline of the convolution is maintained and the process and method meet the approval of the Engineer.

Anchor bolts, washers and nuts, to be plated against corrosion in accordance with the special provisions, shall be zinc-coated by the mechanical plating method conforming to ASTM B695, Class 50. Zinc-coated nuts shall be tapped oversize in accordance with the requirements of AASHTO M291 and shall meet the supplementary requirements S1.1 thru S1.2.1 of the same specifications for lubricant and testing.

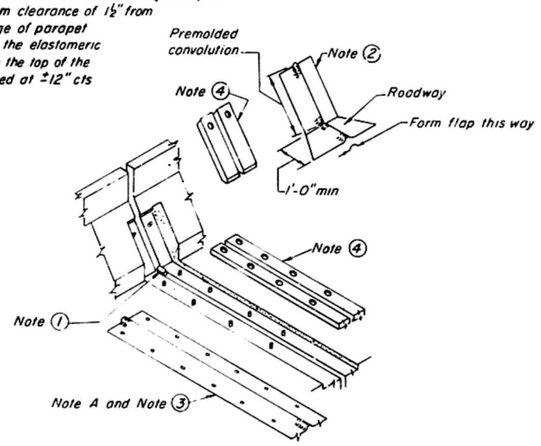

AT PARAPET

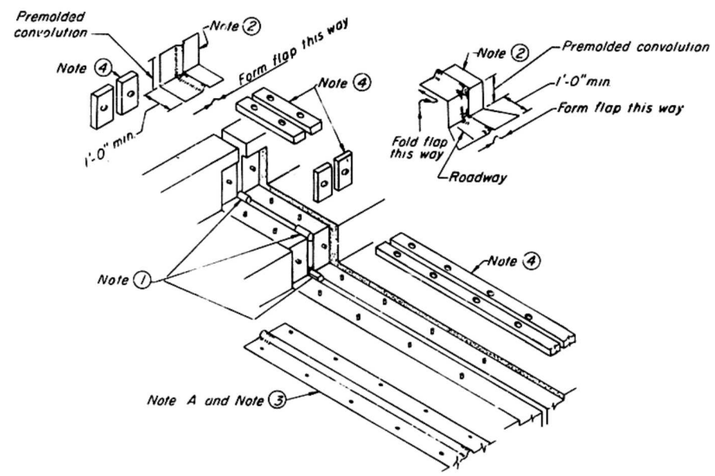

AT SIDEWALK or MEDIAN

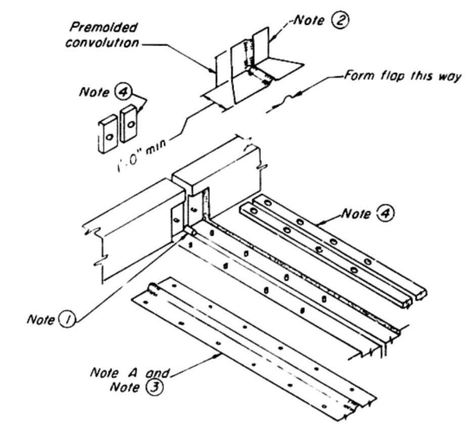

AT WALL

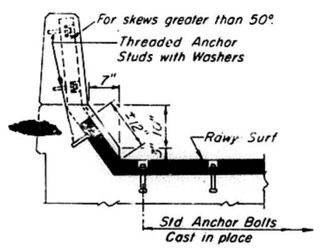

AT PARAPET

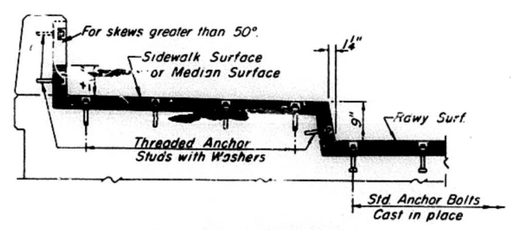

AT SIDEWALK OR MEDIAN TYPICAL END TREATMENT

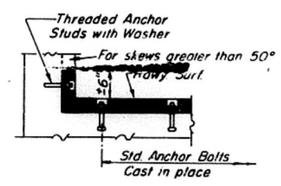

AT WALL

NEOPRENE EXPAN. JT. DETAILS
CEDAR STREET BRIDGE
F.A. RTE. 669 SEC. 103B-1-4(D)
PEORIA-TAZEWELL COUNTIES

MTA, INCORPORATED

DESIGNED J.N. CHECKED G.B.M.
DRAWN J.D.W. DATE 12-11-87 NO. 85-12

ROUTE NO	SECTION	COUNTY	TOTAL SHEETS	SHEET NO
F.A.669	(8)	PEORIA TAZEWELL	82	70
FED ROAD DIST NO 7	ILLINOIS	PROJECT ~~BMP-669(...)~~		
(8)103B-I-4(D)		SHEET 68 OF 70		

NOTE: SINGLE OR TWIN ARM ASSEMBLY SHALL BE TILTED 3° ABOVE HORIZONTAL

"INSTALL AND ORIENT ARM BRACKET OVER POLE TENON AND FIRMLY HAND TIGHTEN THE TWO SET SCREWS. USE THIRD HOLE IN ARM BRACKET AS A GUIDE TO DRILL A 21/64" DIAMETER HOLE THROUGH TENON. INSTALL AND TIGHTEN SELF-TAPPING SCREW. TIGHTEN SET SCREWS AN ADDITIONAL 1/4 TO 3/8 TURN WITH HEX KEY (NOT PROVIDED). INSTALL LOCKNUTS ON SET SCREWS IF THREADED PROJECTION ALLOWS."

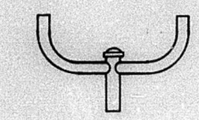

☐ TWIN TENON

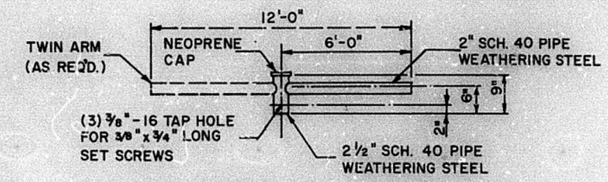

☐ TENON MOUNTED BRACKET ARM

1. LUMINAIRE
2. WOOD POLE, CLASS 3 OR BETTER
3. 2 1/2" GALV. STEEL CONDUIT
4. SINGLE OFFSET POLE BAND
5. CONDUIT BUSHING
6. CABLE CLAMPS ON 2'-0" CENTERS
7. 3/C #12 TYPE USE CABLE
8. 1" GALV. STEEL CONDUIT 10'-0" IN LENGTH
9. 5/8" ϕ HOT DIPPED GALVANIZED BOLT WITH FLAT WASHER & LOCKNUT (3 REQ'D.)
10. CONDUIT CLAMPS ON 3'-0" CENTERS
11. UNIT DUCT
12. THREADED REDUCER
13. "C" CONDULET, THREADED
14. 1 1/2" GALV. STEEL CONDUIT FOR 1 UNIT DUCT OR 3" GALV. STEEL CONDUIT FOR 2 OR 3 UNIT DUCTS.

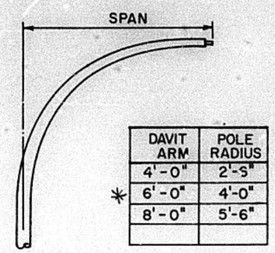

DAVIT ARM	POLE RADIUS
4'-0"	2'-9"
* 6'-0"	4'-0"
8'-0"	5'-6"

☒ DAVIT ARM

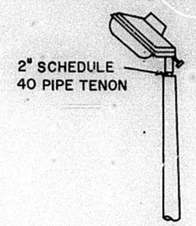

☐ TENON

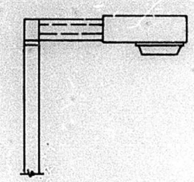

☐ SHORT BRACKET

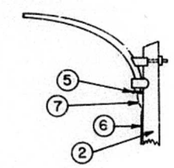

☐ MAST ARM

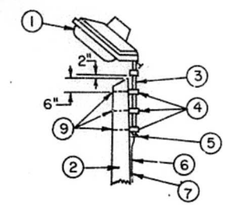

☐ TENON

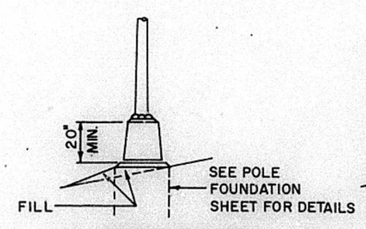

☐ TRANSFORMER BASE

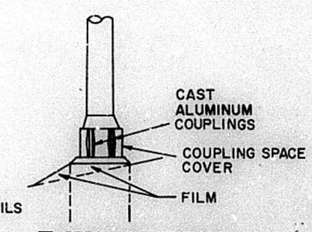

☐ BREAKAWAY COUPLING

☐ FRANGIBLE

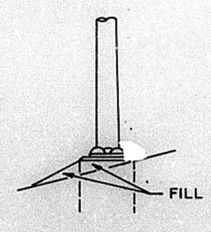

☒ ANCHOR

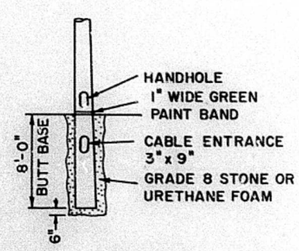

☐ BUTT BASE

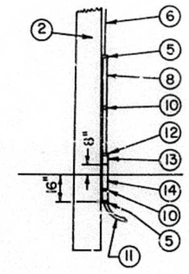

POLE LENGTH	DEPTH IN GROUND
65'	12'
60'	10'
55'	9'
50'	8'
45'	7'
40'	6.5'
35'	6'
30'	5.5'

☐ POLE, WOOD

☒ METAL OR ☐ CONCRETE

667032 - PAY ITEM
LIGHT POLE ALUM. 45' M.H. 6 FT. DAVIT

DRAWN JUNE 1, 1984 BY J. L. PUTNAM	
REV. BY JLP	1-30-85
REV. BY JLP	4-24-85

POLE STANDARDS

STATE OF ILLINOIS
DEPARTMENT OF TRANSPORTATION

ROUTE NO.	SECTION	COUNTY	TOTAL SHEETS	SHEET NO.
F.A. 669	*	PEORIA-TAZEWELL	82	71

FED. ROAD DIST. NO. 7 | ILLINOIS | FED. AID PROJECT: BMP-669(-)

SHEET NO. 69
70 SHEETS

*103 B-I-4(D)

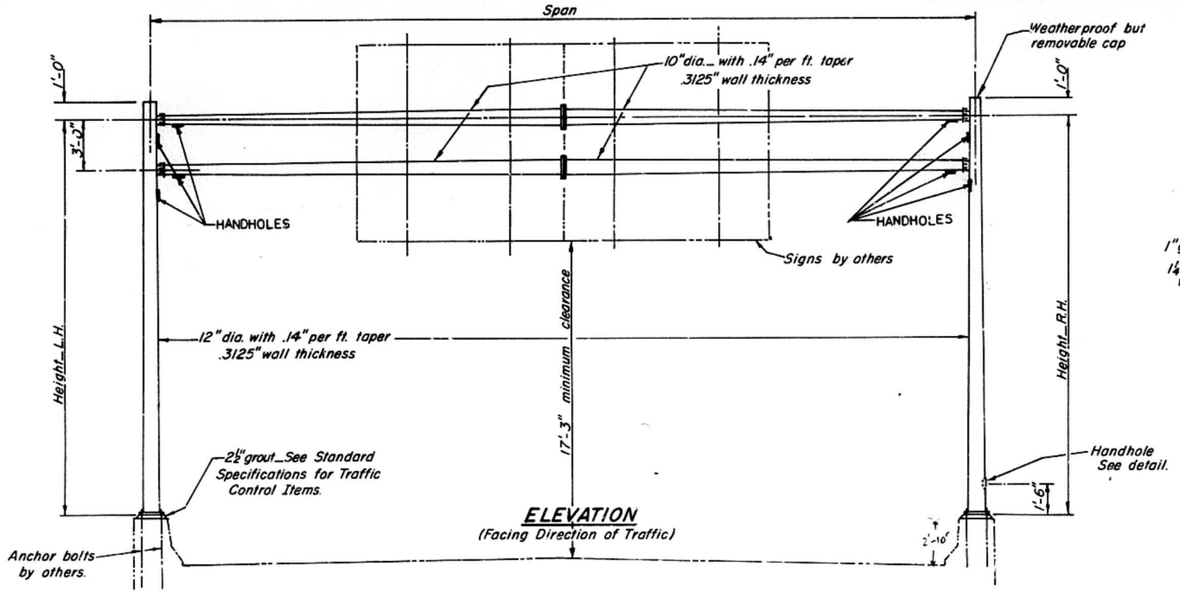

ELEVATION
(Facing Direction of Traffic)

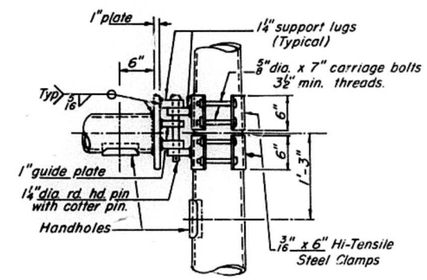

BEAM CONNECTION TO POST
(TYPICAL)

GENERAL NOTES

DESIGN: AASHTO Standard Specifications for Structural Supports for Highway Signs, Luminaires and Traffic Signals.

CONSTRUCTION: Standard Specifications for Road and Bridge Construction, State of Illinois dated Oct. 1, 1979; Standard Specifications for Traffic Control Items adopted January 1, 1981 and Special Provisions.

LOADING: 80 MPH wind plus 30% Gust Factor.

MATERIAL: All tapered tube for support poles and crossbeams shall be of high strength steel, cold rolled with a minimum yield strength of 50,000 p.s.i. All structural steel shapes shall conform to ASTM A-36. The posts and crossbeam assemblies including sign brackets shall be galvanized after fabrication in accordance with ASTM A-123 and A-385. Steel anchor bolts shall have a minimum yield strength of 55,000 p.s.i.

WELDING: All welding shall be continuous unless otherwise shown. All welding to be done in accordance with current AWS Specifications. Welding shall be done with electrodes E7016, 1B or 2B.

DRAWINGS: The Contractor shall submit detailed drawings showing design materials, thickness of sections and weld sizes to the Engineer for approval prior to fabrication.

The Contractor shall verify all span lengths (center-line to center-line of Posts), differential foundation elevations and bolt circle of anchor bolts in the field prior to ordering materials for the sign supports.

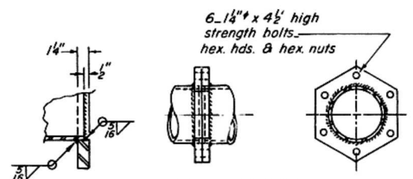

BEAM SPLICE

Monotube No.	Station	Span	Ht. L.H.	Ht. R.H.	SIGNS	D X W
1	3+60	52'-4"	22'-0"	22'-0"	MIN.	1 @ 6' x 9' @ 12' x 10'
2	10+60	52'-4"	22'-0"	22'-0"	MIN.	1 @ 8.5' x 18.5'

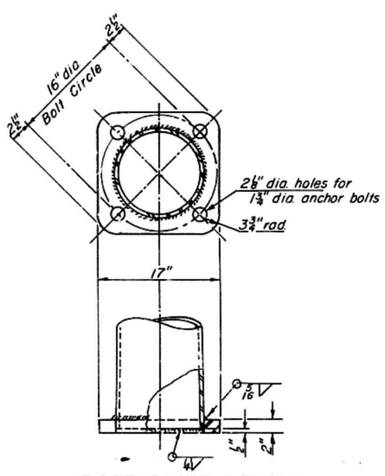

BASE PLATE DETAILS

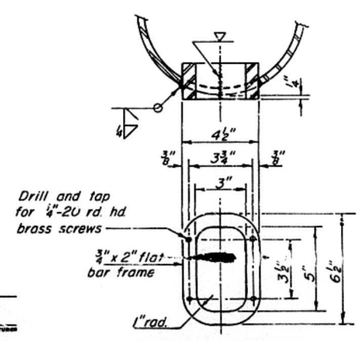

HANDHOLE DETAILS
Provide 6½" x 4½" - #10 Ga. Cover. Round corners to 1¾" rad. Provide 4-5/16"ϕ holes

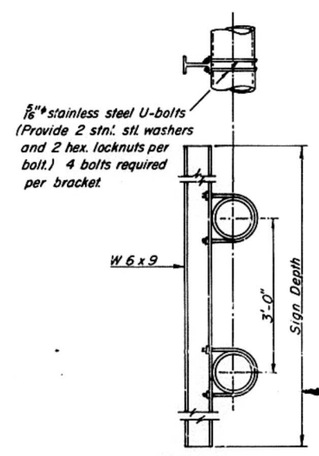

BRACKETS FOR SIGN MOUNTING

BILL of MATERIAL

MONOTUBE OVERHEAD SIGN STRUCTURE (SPECIAL)	Lin Ft	105

DESIGNED		EXAMINED 19
CHECKED		PASSED
DRAWN		APPROVED
CHECKED		

ENGINEER OF BRIDGE AND TRAFFIC STRUCTURES
ENGINEER OF DESIGN
DIRECTOR OF HIGHWAYS

MONOTUBE STRUCTURE (SPECIAL)

F.A. Rt. 669
Sec. 103B-I-4(D)
Peoria-Tazewell Counties

ROUTE NO	SECTION	COUNTY	TOTAL SHEETS	SHEET NO
FA. 669	⊗	PEORIA - TAZEWELL	82	72
FED ROAD DIST NO 7	ILLINOIS	PROJECT ~~BHF-669(-)~~		

⊗ 103B-I-4(D)

SHEET 70 OF 70

D	E	H	K	"d"
1"	1 1/8"	13/16"	1 3/4"	1/4"
1 1/2"	1 5/8"	1 5/16"	2 1/8"	1/2"
2"	2 1/8"	1 13/16"	2 7/8"	1/2"
2 1/2"	2 5/8"	2 5/16"	3 3/8"	1"

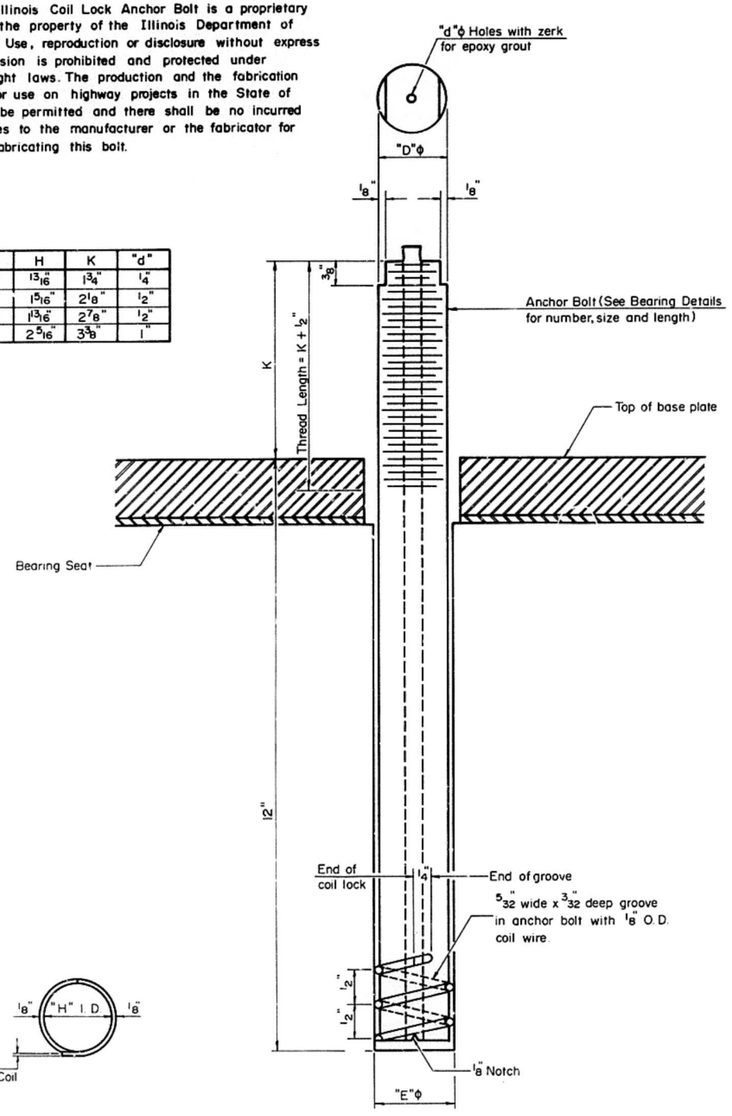

PLAN - COIL WIRE

ILLINOIS COIL - LOCK ANCHOR BOLT

MATERIALS FOR ILLINOIS COIL-LOCK ANCHOR BOLT

The anchor bolt shall be fabricated from cold drawn or hot finished seamless carbon steel mechanical tubing conforming to ASTM A519, Grade 1026 and supplied with hexagonal nuts and cut washers.

The coil wire shall be made of any suitable soft steel wire.

The finished anchor bolt shall be cleaned of rust and other foreign materials and wrapped or packaged to prevent contamination until they are installed. The epoxy grout shall be a two-component, epoxy resin bonding system conforming to ASTM C881, Type I and of a Class suitable for the temperature at installation.

INSTALLATION PROCEDURE FOR THE ILLINOIS COIL-LOCK ANCHOR BOLT

1. With the coil wire in place, the bolt shall be inserted into the hole and turned clockwise to a snug fit in the hole. Nut and washer shall be placed on the bolt. The nut shall be tensioned until the steel base plates are held securely to the concrete bearing seat.
2. Epoxy grout shall be pumped through the zerk fitting with a pressure gun. Pumping shall continue until the epoxy overflows the hole around the bolt shank. After pumping is discontinued, excess epoxy shall be immediately wiped off.

ALTERNATE ANCHOR BOLTS

The Contractor may use, at his option, the capsule or the adhesive cartridge type anchor rods that have been previously tested and given a prior approval by the Department. The Contractor shall install these anchor rods in pre-drilled holes in accordance with the manufacturer's recommendations and procedures.

The capsule or the adhesive cartridge type anchor rods shall be a two part system composed of:

1. A threaded rod stud with nut & washer conforming to ASTM A307.
2. A sealed glass capsule or a sealed glass adhesive cartridge containing premeasured amounts of the adhesive chemical.

GENERAL NOTES

Holes in the masonry for anchor bolts shall be drilled through the base plates to the diameter and depth shown or in accordance with the manufacturer's recommendation after beams or girders have been erected and adjusted.

Prior to setting the bolts, the holes shall be dry and all dust and loose particles shall be removed by the use of compressed air or vacuuming.

The anchor bolts, furnished and installed and including the epoxy grout or capsules shall not be paid for separately but shall be included in the unit bid price for "Furnishing and Erecting Structural Steel."

Anchor bolts, nuts and washers shall be completely coated by either the hot-dipped process conforming with AASHTO M232 or the mechanical plating method conforming to ASTM B695, Class 50. Zinc coated nuts shall be tapped over size in accordance with the requirements of AASHTO M291 and shall meet the supplementary requirements S1.1 thru S1.2.1 of the same specifications for lubricant and testing.

ANCHOR BOLT DETAIL
CEDAR STREET BRIDGE
F.A. RTE. 669 SEC. 103B-I-4(D)
PEORIA TAZEWELL COUNTIES

MTA, INCORPORATED

DESIGNED J.N. CHECKED G.B.M.
DRAWN K.T.B. DATE 12-11-87 NO. 85-12

ROUTE		SECTION	COUNTY	SHEETS TOTAL	SHEETS NO.
F.A.	669	103 B-I-4 (D)	PEORIA - TAZEWELL	82	73
PROJ. ~~BMP 669-1~~					

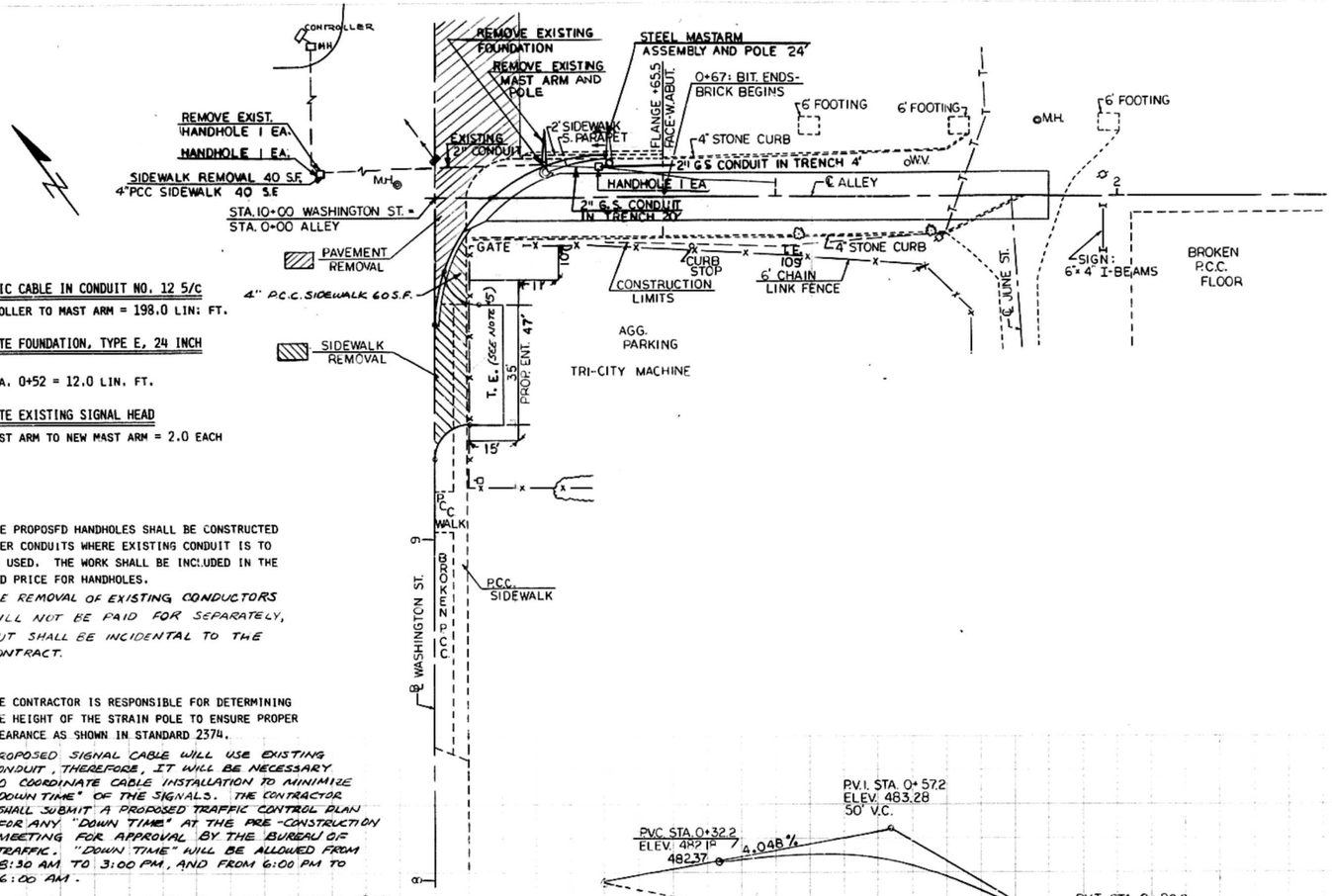

ELECTRIC CABLE IN CONDUIT NO. 12 S/C

CONTROLLER TO MAST ARM = 198.0 LIN. FT.

CONCRETE FOUNDATION, TYPE E, 24 INCH

ALLEY

LT. STA. 0+52 = 12.0 LIN. FT.

RELOCATE EXISTING SIGNAL HEAD

OLD MAST ARM TO NEW MAST ARM = 2.0 EACH

NOTE:

1. THE PROPOSED HANDHOLES SHALL BE CONSTRUCTED OVER CONDUITS WHERE EXISTING CONDUIT IS TO BE USED. THE WORK SHALL BE INCLUDED IN THE BID PRICE FOR HANDHOLES.
2. THE REMOVAL OF EXISTING CONDUCTORS WILL NOT BE PAID FOR SEPARATELY, BUT SHALL BE INCIDENTAL TO THE CONTRACT.
3. THE CONTRACTOR IS RESPONSIBLE FOR DETERMINING THE HEIGHT OF THE STRAIN POLE TO ENSURE PROPER CLEARANCE AS SHOWN IN STANDARD 2374.
4. PROPOSED SIGNAL CABLE WILL USE EXISTING CONDUIT, THEREFORE, IT WILL BE NECESSARY TO COORDINATE CABLE INSTALLATION TO MINIMIZE "DOWN TIME" OF THE SIGNALS. THE CONTRACTOR SHALL SUBMIT A PROPOSED TRAFFIC CONTROL PLAN FOR ANY "DOWN TIME" AT THE PRE-CONSTRUCTION MEETING FOR APPROVAL BY THE BUREAU OF TRAFFIC. "DOWN TIME" WILL BE ALLOWED FROM 8:30 AM TO 3:00 PM, AND FROM 6:00 PM TO 6:00 AM.
5. THE TEMPORARY EASEMENT EXPIRES JUNE 1, 1989. THE CONTRACTOR SHALL GIVE TRI-CITY MACHINE 30 DAYS WRITTEN NOTICE TO REMOVE THE FENCE FOR CONSTRUCTION OF THE ENTRANCE. ADDRESS: JOE RICHEY, C/O TRI-CITY MACHINE, 1506 S.W. WASHINGTON STREET, PEORIA, ILLINOIS 61605.

PAVEMENT FABRIC

WASHINGTON ST.

STA. 9+77.5 - 10+81.5± 176 SQ. YDS.

P.C.C. PAVEMENT 10"

WASHINGTON ST.

STA. 9+77.5-10+81.5± = 176 SQ. YD.

BITUMINOUS BASE COURSE 10"

ALLEY

STA. LT. & RT. 0+22±-1+80± = 243 SQ. YD.

CONCRETE CURB 6"

WASHINGTON ST.

ALONG 50' RADIUS = 6 LIN. FT.

C.C.&G. & G. TB 6.24

WASHINGTON ST.

ALONG 50' RADIUS = 29 LIN. FT.

SIDEWALK REMOVAL

WASHINGTON ST.

RT. STA. 9+33±-9+69± = 390 SQ. FT.
RT. STA. 9+69±-9+89± = 190 SQ. FT.
TOTAL = 580 SQ. FT.

P.C.C. DRIVEWAY PAV'T 8"

ALONG 50' RADIUS - ENT. TO ALLEY = 14 SQ. YD.

WASHINGTON STREET

RT. STA. 9+24±-9+79± = 45 SQ. YD.
TOTAL = 59 SQ. YD.

PAVEMENT REMOVAL

ALLEY

LT. & RT. STA. 0+10±-0+40± = 73 SQ. YD.
LT. & RT. STA. 1+10±-1+80± = 179 SQ. YD.

WASHINGTON ST.

RT. STA. 9+63±-10+81.5± = 195 SQ. YD.

TOTAL 447 SQ. YD.

EPOXY PAVEMENT MARKING

STA. 0+00 TO 44+36.46 20,265 LIN FT

PAINT PAVEMENT MARKING LINE 4 INCH

STA. 0+00 TO 44+36.46 20,265 LIN FT

SUMMARY OF EARTHWORK

ALLEY

EMBANKMENT 198 CU. YDS.

APPROXIMATELY 267 CU. YDS. IS NEEDED TO CONSTRUCT THE EMBANKMENT. 33% EXCESS IS ESTIMATED.

SCALE: 1"=20'

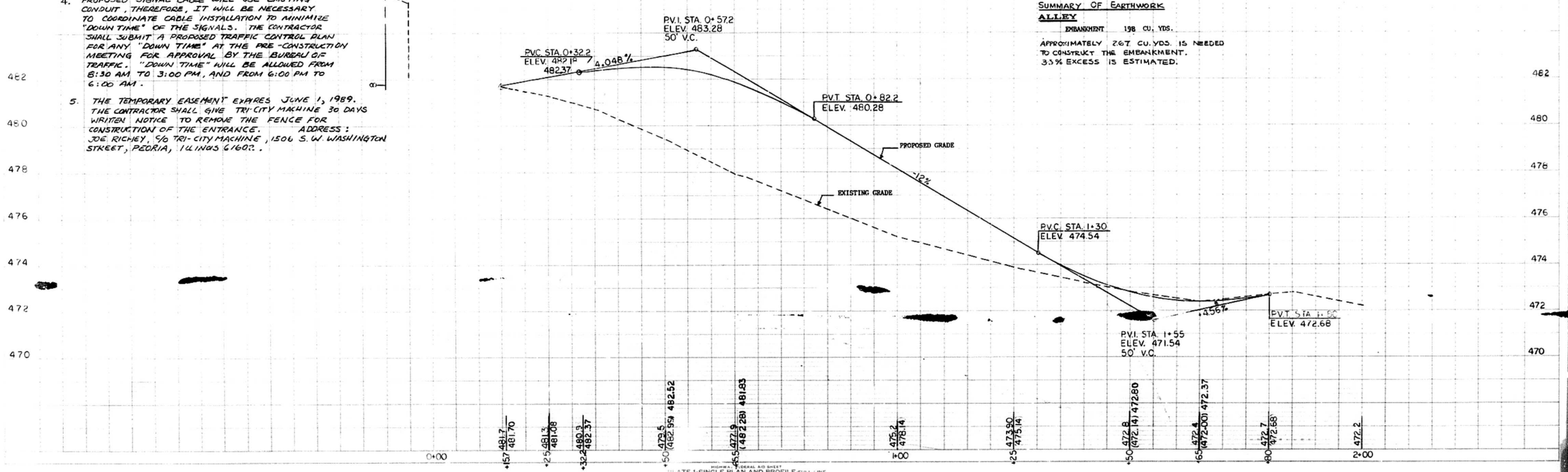

PLATE 1-SINGLE PLAN AND PROFILE-FULL LINE

ROUTE NO.	SEC.	COUNTY	TOTAL SHEETS	SHEET NO.
FA 669	1038-I-4(0)	PEORIA - TAZEWELL	82	74
		ILLINOIS PROJECT ~~SHF-669(-)~~		

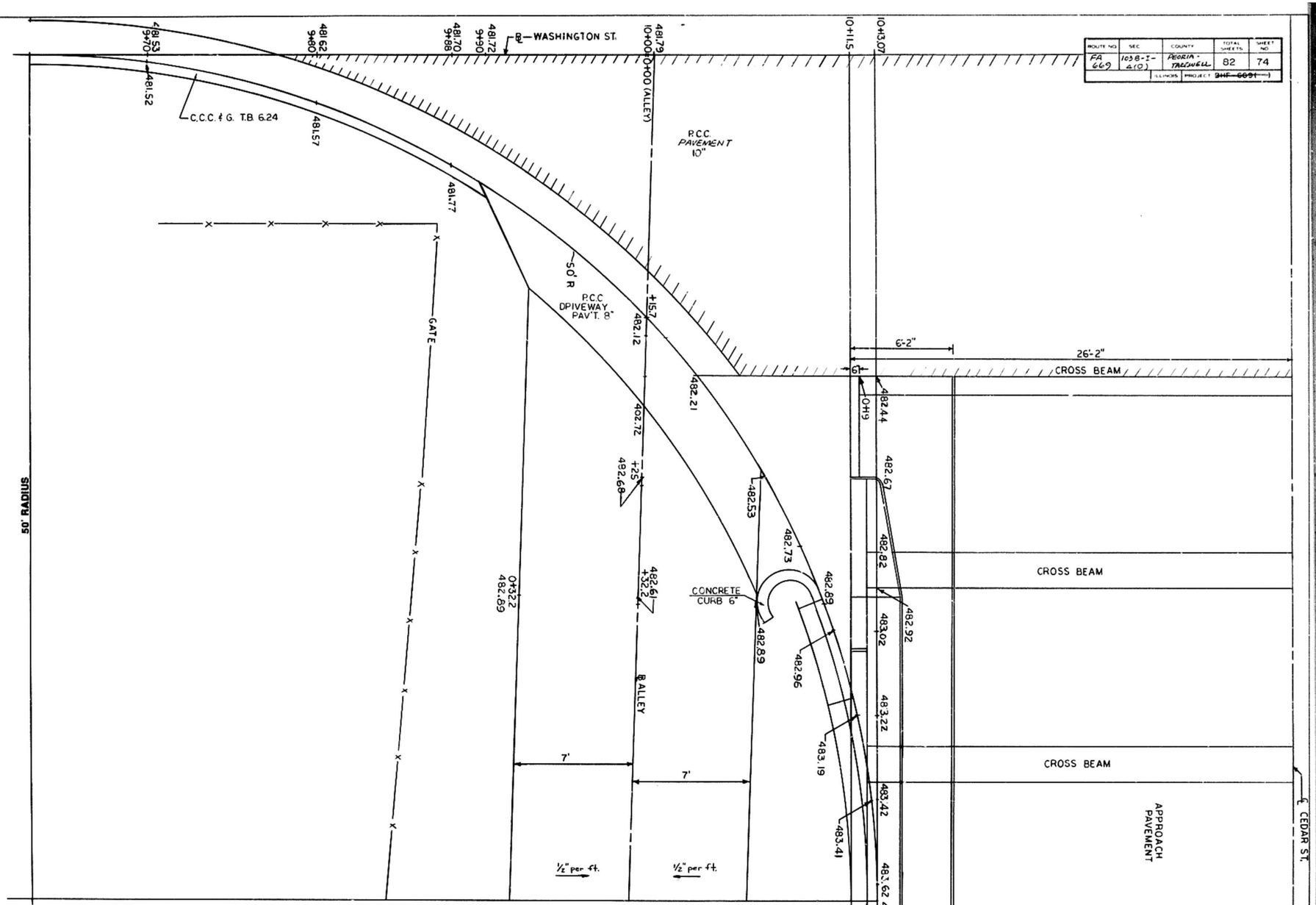

SCALE 1" = 3'-0"

DISTRICT NO. 4 PEORIA

DESIGNED

DRAWN DATE

CHECKED SCALE

ROUTE	SECTION	COUNTY	SHEET TOTAL	SHEET NO.
FA 669	103 B-I-4 (D)	PEORIA	82	75
MKD.				
PROJ. ~~BHF 669(-)~~ STA.		TO STA.		

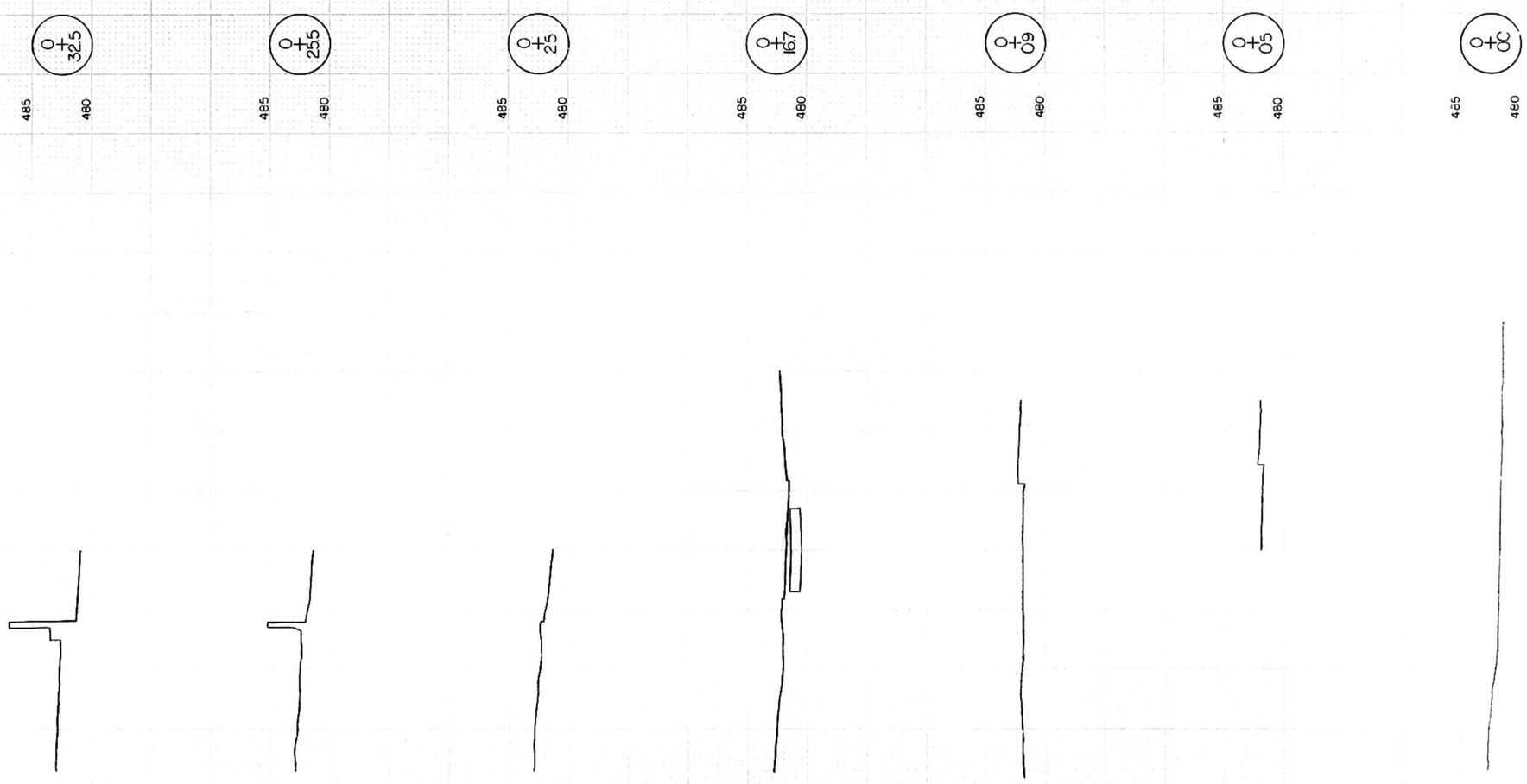

FINAL SURVEY		BY	DATE
NOTE BOOK NO.	SURVEYED		
	PLOTTED		
	TEMPLATE		
	AREAS		
	AREAS CHECKED		

ORIGINAL SURVEY		BY	DATE
NOTE BOOK NO.	SURVEYED		
	PLOTTED		
	TEMPLATE		
	AREAS		
	AREAS CHECKED		

SCALE: 1"=5' VERT.
1"=10' HORIZ.

HIGHWAY FEDERAL AID SHEET
PLATE 3-FULL CROSS SECTION-FULL DOT

PRINTED IN U.S.A.

ALLEY

ROUTE	SECTION	COUNTY	SHEET TOTAL	SHEET NO.
FA 669	103B-I-4(D)	PEORIA	82	76
MKD.				
PROJ. ~~BHF-6691~~ STA.		TO STA.		

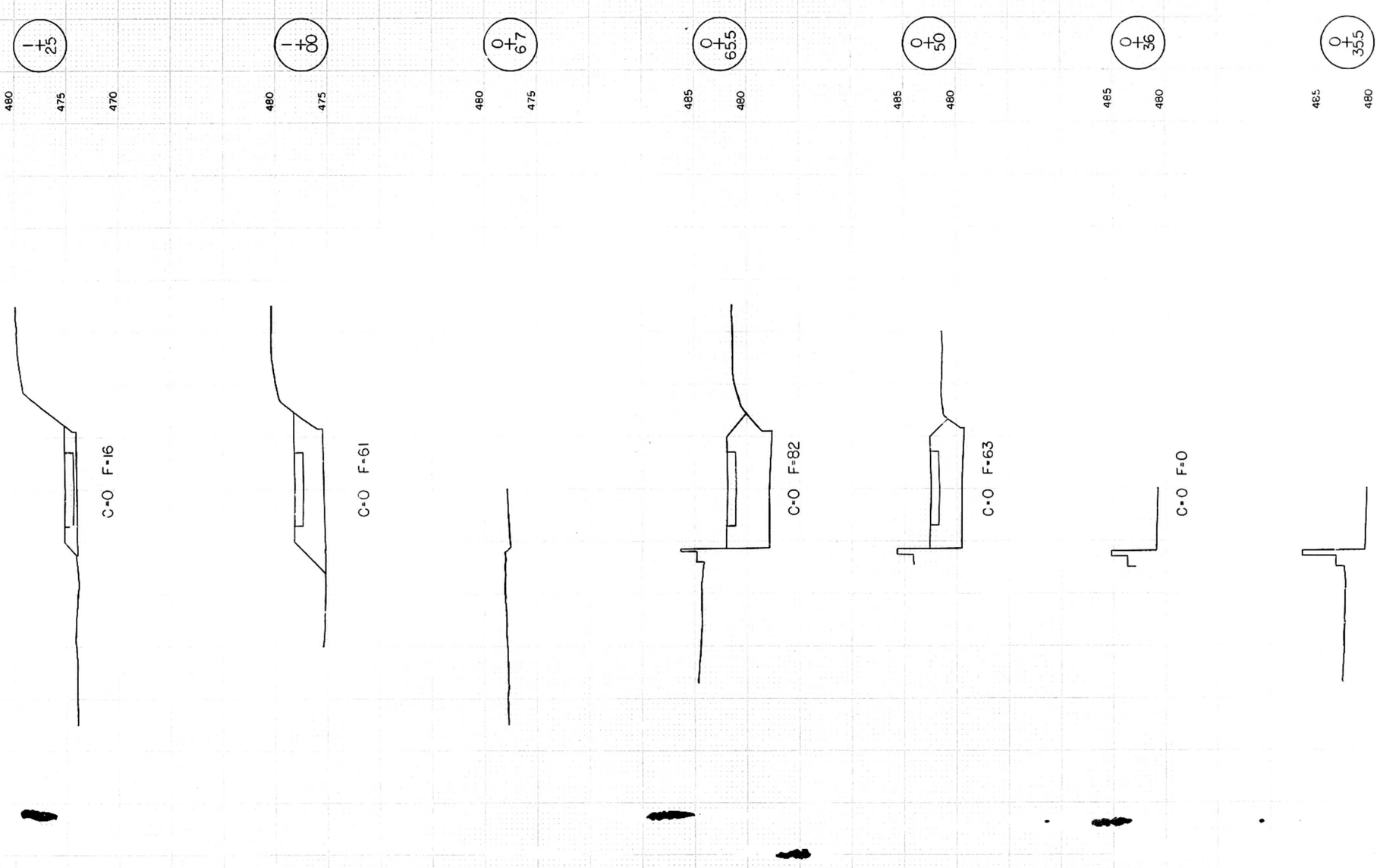

FINAL SURVEY		BY	DATE
NOTE BOOK NO.	SURVEYED		
	PLOTTED		
	TEMPLATE		
	AREAS		
	AREAS CHECKED		

ORIGINAL SURVEY		BY	DATE
NOTE BOOK NO.	SURVEYED		
	PLOTTED		
	TEMPLATE		
	AREAS		
	AREAS CHECKED		

SCALE: 1"=5' VERT.
1"=10' HORIZ.

HIGHWAY FEDERAL AID SHEET
PLATE 3-FULL CROSS SECTION-FULL DOT

PRINTED IN U.S.A.

ALLEY

50 0 50

ROUTE	SECTION	COUNTY	SHEET TOTAL	SHEET NO.
FA 669	103 B-I-4(D)	PEORIA	82	77
MKD.				
PROJ. ~~BHF-669(-)~~ STA.		TO STA.		

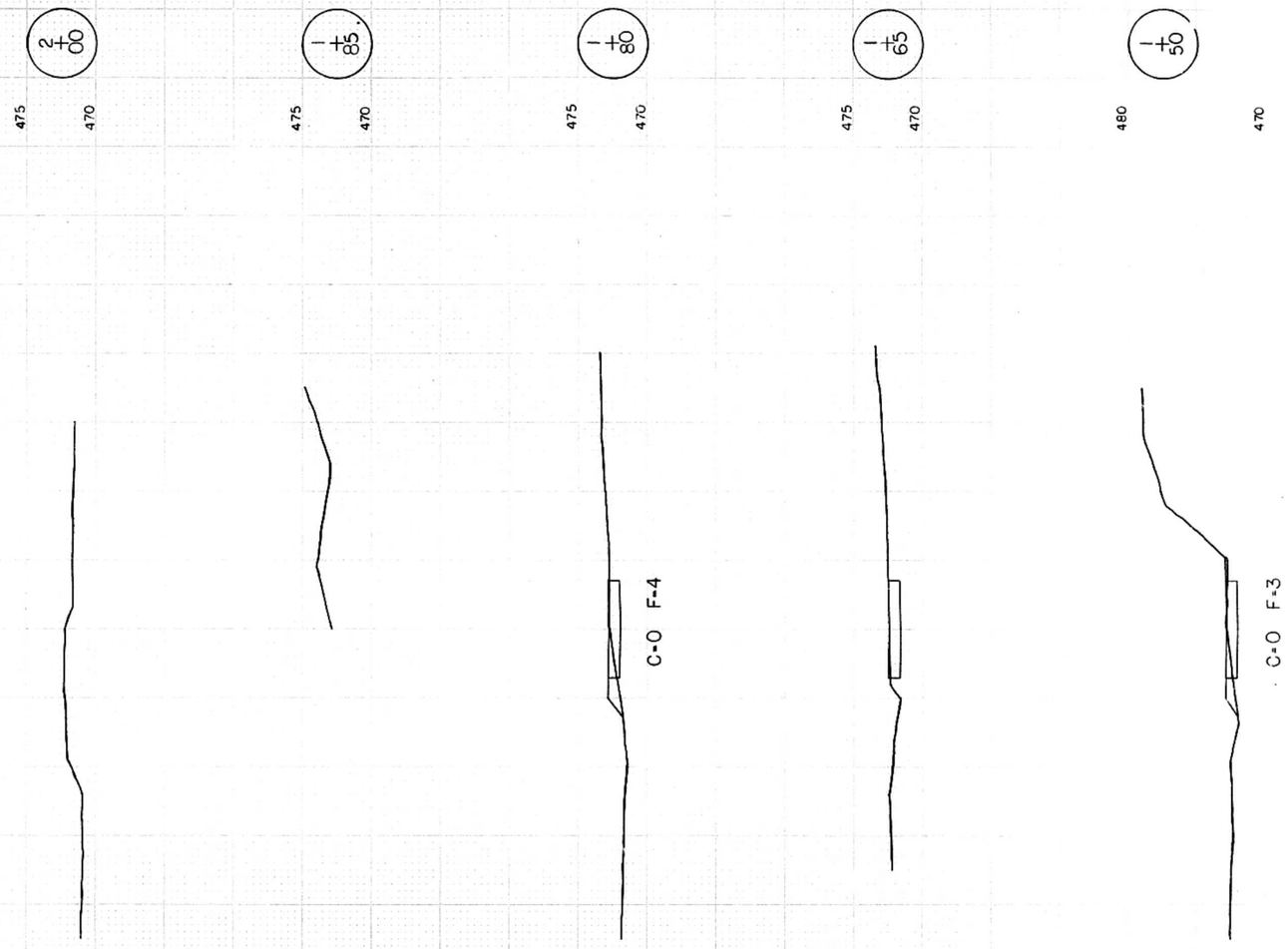

SCALE: 1"=5' VERT.
1"=10' HORIZ.

FINAL SURVEY
NOTE BOOK NO.
LINEATED
PLOTTED
TEMPLATE
AREAS
AREAS CHECKED
BY
DATE

ORIGINAL SURVEY
NOTE BOOK NO.
LINEATED
PLOTTED
TEMPLATE
AREAS
AREAS CHECKED
BY
DATE

HIGHWAY FEDERAL AID SHEET
PLATE 3-FULL CROSS SECTION-FULL DOT

PRINTED IN U.S.A.

ALLEY

ROUTE NO.	SEC	COUNTY	TOTAL SHEETS	SHEET NO.
FA669	1088-1-4(D)	PEORIA-TAZEWELL	82	78
		ILLINOIS PROJECT ~~BHF-669(1)~~		

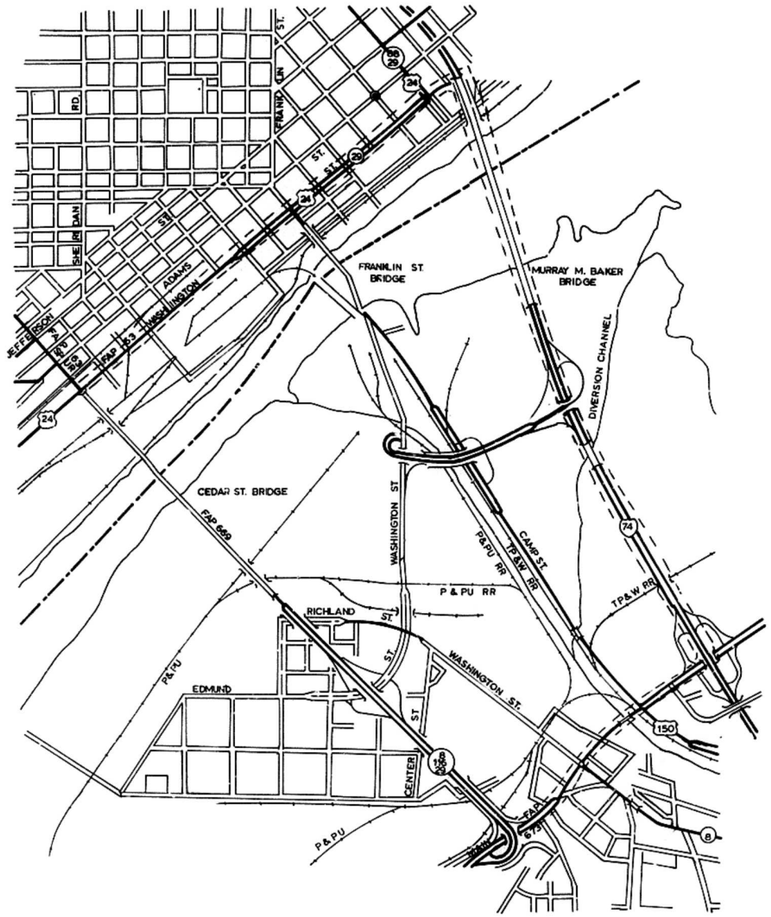

MARKED ROUTE DETOUR

DISTRICT NO. 4 PEORIA

DESIGNED

DRAWN DATE

CHECKED SCALE

FEDERAL AID ROUTE NO.	SEC.	COUNTY	TOTAL SHEETS	SHEET NO.
FARTE 669	103-B-1-4(0)	PEORIA TAZEWELL	82	79
FED. ROAD DIV. NO. 6	ILLINOIS	PROJECT		

SIGN No.1

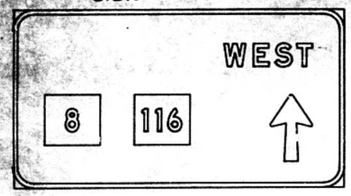

ILL 8 116 WEST

SHIELD STANDARD(S)
M1-1100A-2422
M1-1100A-2422

ARROW SIZE(S)
29 1/4 X 18 1/4

BORDER WIDTH IS 2.00 INCHES
CORNER RADIUS IS 9.0 INCHES

TOTAL WIDTH IS 12.0 FEET
TOTAL HEIGHT IS 6.5 FEET
TOTAL AREA IS 78.00 SQ. FT.

BACKGROUND/LEGEND COLOR IS GREEN/WHITE

LINE	VERTICAL SPACING	LEGEND HEIGHT	LETTER HEIGHT	LEFT BORDER	WORD 1 WIDTH	HORIZ. SPACING	WORD 2 WIDTH	HORIZ. SPACING	WORD 3 WIDTH	HORIZ. SPACING	WORD 4 WIDTH	HORIZ. SPACING	WORD 5 WIDTH	RIGHT BORDER	LEGEND WIDTH
TOP EDGE															
	15/0														
1		10/0	10/0- 0/0	91/7	38/2									13/7	116/2
	8/6														
2		29/2	10/0- 0/0	13/7	24/0	15/0	24/0	35/0	18/2					13/7	116/2
	15/0														
3															
4															
5															
6															
7															
8															
BOTTOM EDGE															

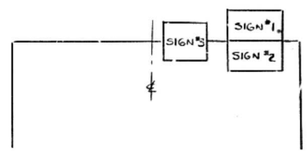

STA. 3+60
SIGN TRUSS

SIGN No.2

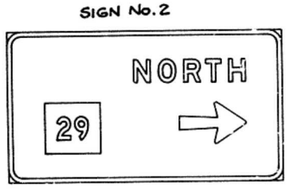

IL 29 NORTH

SHIELD STANDARD(S)
M1-1100A-2422

ARROW SIZE(S)
29 1/4 X 18 1/4

BORDER WIDTH IS 2.00 INCHES
CORNER RADIUS IS 6.0 INCHES

TOTAL WIDTH IS 10.0 FEET
TOTAL HEIGHT IS 5.5 FEET
TOTAL AREA IS 55.00 SQ. FT.

BACKGROUND/LEGEND COLOR IS GREEN/WHITE

LINE	VERTICAL SPACING	LEGEND HEIGHT	LETTER HEIGHT	LEFT BORDER	WORD 1 WIDTH	HORIZ. SPACING	WORD 2 WIDTH	HORIZ. SPACING	WORD 3 WIDTH	HORIZ. SPACING	WORD 4 WIDTH	HORIZ. SPACING	WORD 5 WIDTH	RIGHT BORDER	LEGEND WIDTH
TOP EDGE															
	12/5														
1		10/0	10/0- 0/0	55/0	49/0									16/0	88/0
	8/6														
2		22/0	10/0- 0/0	16/0	24/0	34/6	29/2							16/0	88/0
	12/5														
3															
4															
5															
6															
7															
8															
BOTTOM EDGE															

SIGN No.3

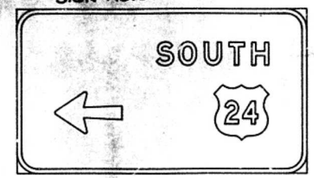

US 24 SOUTH

SHIELD STANDARD(S)
M1 - 4 - 2424

ARROW SIZE(S)
29 1/4 X 18 1/4

BORDER WIDTH IS 2.00 INCHES
CORNER RADIUS IS 9.0 INCHES

TOTAL WIDTH IS 10.5 FEET
TOTAL HEIGHT IS 6.0 FEET
TOTAL AREA IS 63.00 SQ. FT.

BACKGROUND/LEGEND COLOR IS GREEN/WHITE

LINE	VERTICAL SPACING	LEGEND HEIGHT	LETTER HEIGHT	LEFT BORDER	WORD 1 WIDTH	HORIZ. SPACING	WORD 2 WIDTH	HORIZ. SPACING	WORD 3 WIDTH	HORIZ. SPACING	WORD 4 WIDTH	HORIZ. SPACING	WORD 5 WIDTH	RIGHT BORDER	LEGEND WIDTH
TOP EDGE															
	14/5														
1		10/0	10/0- 0/0	60/6	48/6									16/4	93/0
	8/6														
2		24/0	10/0- 0/0	16/4	29/2	39/6	24/0							16/4	93/0
	14/5														
3															
4															
5															
6															
7															
8															
BOTTOM EDGE															

SIGN No.4

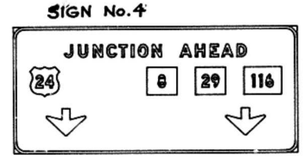

SIGN 1

SHIELD STANDARD(S)
M1 - 4 - 2424
M1-1100A-2422
M1-1100A-2422
M1-1100A-3022

ARROW SIZE(S)
32 X 22
32 X 22

BORDER WIDTH IS 2.00 INCHES
CORNER RADIUS IS 9.0 INCHES

TOTAL WIDTH IS 19.0 FEET
TOTAL HEIGHT IS 8.5 FEET
TOTAL AREA IS 161.50 SQ. FT.

BACKGROUND/LEGEND COLOR IS GREEN/WHITE

LINE	VERTICAL SPACING	LEGEND HEIGHT	LETTER HEIGHT	LEFT BORDER	WORD 1 WIDTH	HORIZ. SPACING	WORD 2 WIDTH	HORIZ. SPACING	WORD 3 WIDTH	HORIZ. SPACING	WORD 4 WIDTH	HORIZ. SPACING	WORD 5 WIDTH	RIGHT BORDER	LEGEND WIDTH
TOP EDGE															
	14/3														
1		10/0	10/0- 0/0	40/6	77/6	15/0	53/2							41/1	146/0
	7/4														
2		24/0	10/0- 0/0	13/0	24/0	70/0	24/0	15/0	24/0	15/0	30/0			13/0	202/0
	9/6														
3		22/0	0/0- 0/0	26/0	32/0	112/0	32/0							25/0	176/0
	14/3														
4															
5															
6															
7															
8															
BOTTOM EDGE															

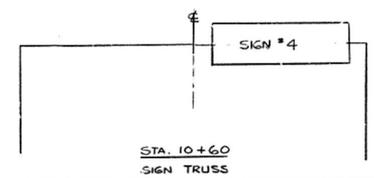

STA. 10+60
SIGN TRUSS

ROUTE	SECTION	COUNTY	SHEET TOTAL	SHEET NO.
FA 669	103B-1-4(D)	PEO.-TAZE	82	81
MKD. #				
PROJ.	STA.	TO STA.		

#ILL. RTE. 8, 29, 116

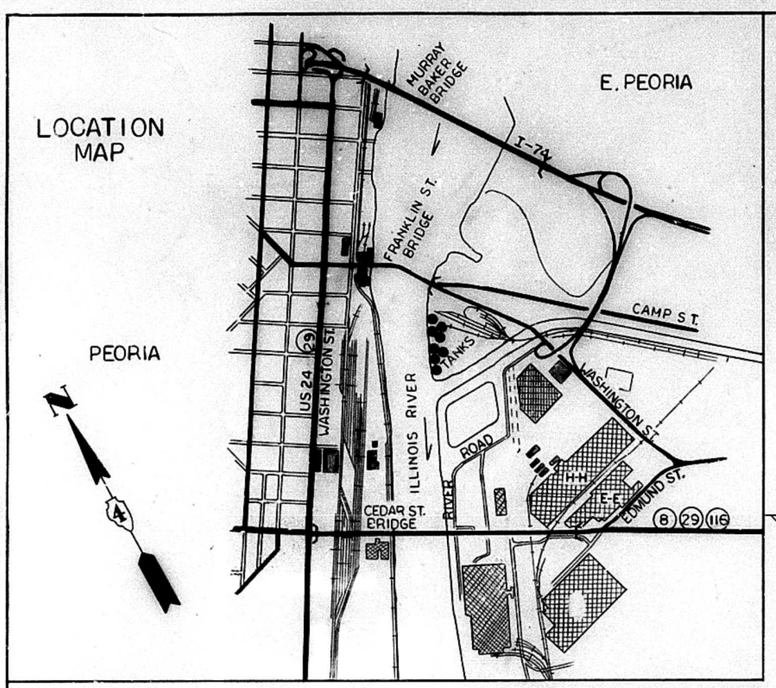

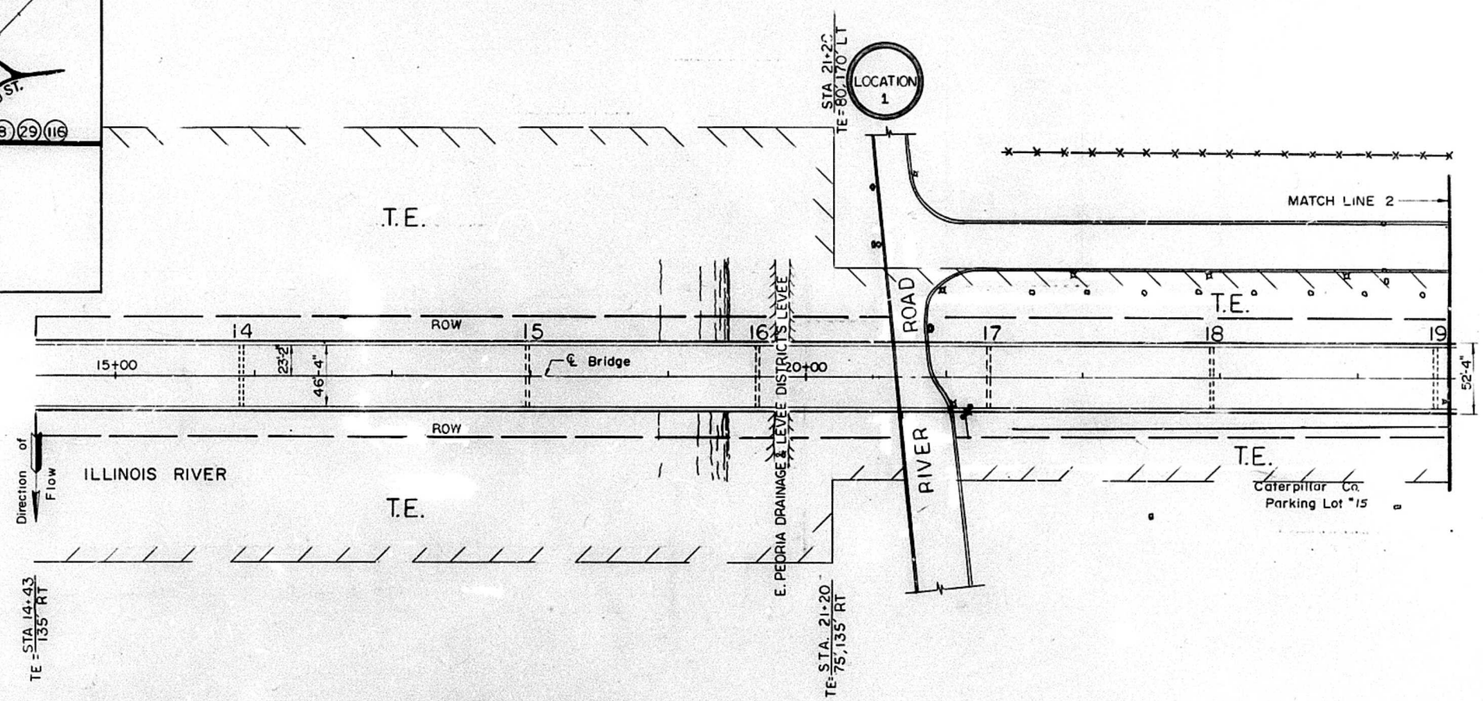

NOTE: SEE SPECIAL PROVISIONS FOR

1) TRAFFIC CONTROL AND PROTECTION DETAILS @ LOCATION 1 THRU 7 WITHIN CATERPILLAR FACTORY AREA

2) WORK RESTRICTIONS ON E. PEORIA DRAINAGE AND LEVEE DISTRICT LEVEE

ILL. DEPT. OF TRANS.
CEDAR STREET BRIDGE
SN. 090-0030

TRAFFIC CONTROL
AND
PROTECTION
WITHIN CATERPILLAR FACTORY AREA
SHEET 1 OF 2
SCALE - 1"=50'

FINAL SURVEY		BY	DATE
SURVEYED			
PLOTTED			
TEMPLATE			
AREAS			
NOTE BOOK NO.			
AREAS CHECKED			

ORIGINAL SURVEY		BY	DATE
SURVEYED			
PLOTTED			
TEMPLATE	E. TESKILOSEN	CC-BK	
AREAS			
NOTE BOOK NO.			
AREAS CHECKED			

ROUTE	SECTION	COUNTY	SHEET TOTAL	SHEET NO
FA 669	103B-I-4(D)	PEO-TAZE.	82	82
MKD. *				
PROJ.				

*ILL. RTE. 8, 29, 116