04-25-2025 LETTING ITEM 106

F.A.I. RTE.	SECTION	COUNTY	TOTAL SHEETS	SHEET NO.
155	(54-4HB)D	LOGAN	133	1
	ILLINOIS	CONTRACT NO. 72220		

STATE OF ILLINOIS
DEPARTMENT OF TRANSPORTATION

D-96-085-22

LOCATION OF SECTION INDICATED THUS: -

FOR INDEX OF SHEETS, SEE SHEET NO. 2

PROPOSED HIGHWAY PLANS

F.A.I. ROUTE 155 (I-155)
SECTION (54-4HB)D
PROJECT NHPP-RAUK(103)
BRIDGE DECK REPLACEMENT
LOGAN COUNTY

C-96-027-23

BRIDGE DECK REPLACEMENT
SN 054-0050
BEGINS STA. 12+00.00
ENDS STA. 20+50.00

LICENSED PROFESSIONAL ENGINEER
RICHARD K. ALLENDER III
062-054436
STATE OF ILLINOIS

12-19-24
Expires: 11/30/2025

BRIDGE DECK REPLACEMENT
SN 054-0051
BEGINS STA. 14+00.00
ENDS STA. 20+00.00

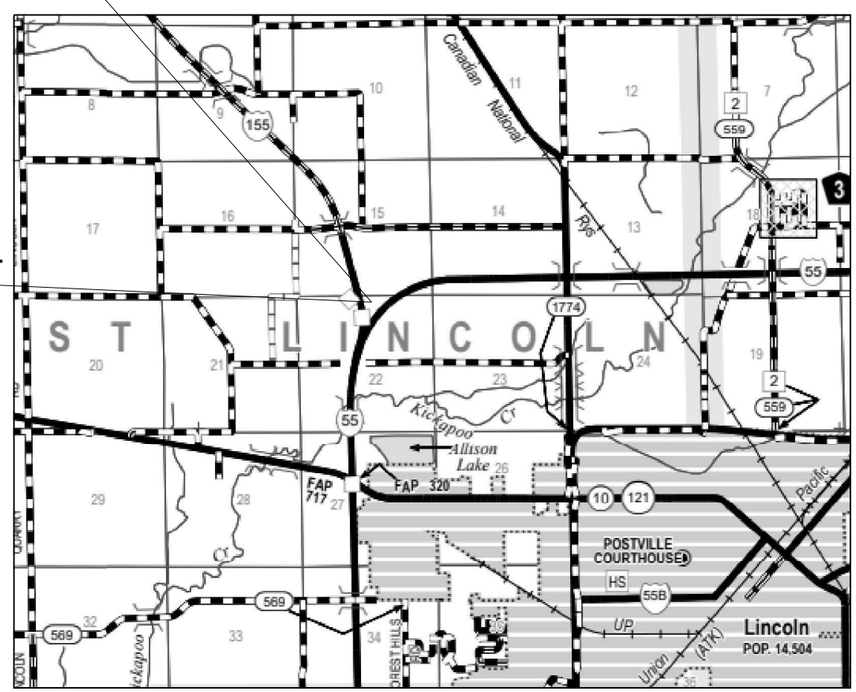

N

LOCATION MAP
NOT TO SCALE

100' 200' 300' — 1"= 100'
0 10' 20' 30' — 1"= 10'
0 50' 100' — 1"= 50'
0 50' 100' — 1"= 40'
0 50' 100' — 1"= 30'
0 50' 100' — 1"= 20'

FULL SIZE PLANS HAVE BEEN PREPARED USING STANDARD ENGINEERING SCALES. REDUCED SIZED PLANS WILL NOT CONFORM TO STANDARD SCALES. IN MAKING MEASUREMENTS ON REDUCED PLANS, THE ABOVE SCALES MAY BE USED.

J.U.L.I.E.
JOINT UTILITY LOCATION INFORMATION FOR EXCAVATION
1-800-892-0123
OR 811

FUNCTIONAL CLASSIFICATION: INTERSTATE

I-155 NB	I-155 SB/I-55
ADT: 9,650 (2021)	ADT: 50 (2022)
MU: 1,850 (19.17%)	MU: 8 (16%)
SU: 3,755 (3.89%)	SU: 2 (4%)
PV: 7,425 (76.94%)	PV: 40 (80%)

STATE OF ILLINOIS
DEPARTMENT OF TRANSPORTATION

SUBMITTED December 20 20 24
REGIONAL ENGINEER

March 21 20 25
ENGINEER OF DESIGN AND ENVIRONMENT

March 21 20 25
DIRECTOR OF HIGHWAYS PROJECT IMPLEMENTATION

PROJECT ENGINEER: JON KELLEY (217) 785-2739 Jonathan.Kelley@illinois.gov
PROJECT MANAGER: CLOYD JACK (217) 524-0064 Cloyd.Jack@illinois.gov

CONTRACT NO. 72220

design firm no. 184001036 whks engineers + planners + land surveyors

GROSS LENGTH = 1300.00 FT. = 0.247 MILE
NET LENGTH = 1300.00 FT. = 0.247 MILE

PRINTED BY THE AUTHORITY OF THE STATE OF ILLINOIS

INDEX OF SHEETS

HIGHWAY STANDARDS

000001-08	STANDARD SYMBOLS, ABBREVIATIONS AND PATTERNS
001001-02	AREAS OF REINFORCEMENT BARS
001006	DECIMAL OF AN INCH AND OF A FOOT
420401-13	PAVEMENT CONNECTOR (PCC) FOR BRIDGE APPROACH SLAB
482001-02	HMA SHOULDER ADJACENT TO FLEXIBLE PAVEMENT
483001-06	PCC SHOULDER
515001-04	NAME PLATE FOR BRIDGES
610001-09	SHOULDER INLET WITH CURB
630001-13	STEEL PLATE BEAM GUARDRAIL
630301-09	SHOULDER WIDENING FOR TYPE 1 (SPECIAL) GUARDRAIL TERMINALS
631011-10	TRAFFIC BARRIER TERMINAL, TYPE 2
631026-06	TRAFFIC BARRIER TERMINAL, TYPE 5
631031-18	TRAFFIC BARRIER TERMINAL, TYPE 6
642001-03	SHOULDER RUMBLE STRIPS, 16 IN.
701101-05	OFF-ROAD OPERATIONS, MULTILANE, 15' (4.5 M) TO 24" (600 MM) FROM PAVEMENT EDGE
701106-02	OFF-ROAD OPERATIONS, MULTILANE, MORE THAN 15' (4.5 M) AWAY
701400-12	APPROACH TO LANE CLOSURE, FREEWAY/EXPRESSWAY
701401-13	LANE CLOSURE, FREEWAY/EXPRESSWAY
701402-12	LANE CLOSURE, FREEWAY/EXPRESSWAY, WITH BARRIER
701426-09	LANE CLOSURE, MULTILANE, INTERMITTENT OR MOVING OPERATION, FOR SPEEDS > 45 MPH
701428-01	TRAFFIC CONTROL, SETUP AND REMOVAL, FREEWAY/EXPRESSWAY
701451-05	RAMP CLOSURE FREEWAY/EXPRESSWAY
701901-10	TRAFFIC CONTROL DEVICES
704001-08	TEMPORARY CONCRETE BARRIER
720006-04	SIGN PANEL ERECTION DETAILS
725001-01	OBJECT AND TERMINAL MARKERS
780001-05	TYPICAL PAVEMENT MARKINGS
781001-04	TYPICAL APPLICATIONS RAISED REFLECTIVE PAVEMENT MARKERS
782006-01	GUARDRAIL AND BARRIER WALL REFLECTOR MOUNTING DETAILS
420001-10	PAVEMENT JOINTS
420701-03	PAVEMENT WELDED WIRE REINFORCEMENT
442201-03	CLASS C AND D PATCHES

GENERAL NOTES

1. UNLESS NOTED OTHERWISE, STATIONS AND OFFSETS REFER TO CENTERLINE OF PROJECT.
2. REMOVED GUARDRAIL THAT IS NOT REPLACED ON THE SAME DAY MUST BE DELINEATED WITH LIGHTED BARRICADES. NO LOCATIONS WILL BE LEFT WITHOUT EITHER LIGHTED BARRICADES OR RESTORED GUARDRAIL AT ANY TIME.

COMMITMENTS

1. NO COMMITMENTS FOR THIS PROJECT.

APPLICATION RATES

AGGREGATE WEDGE SHOULDERS	1.60 TONS/CU YD
AGRICULTURAL GROUND LIMESTONE	2.0 TONS/ACRE
BITUMINOUS MATERIALS (PRIME COAT)	0.25 LB/SQ FT (AGGREGATE)
BITUMINOUS MATERIALS (TACK COAT)	0.05 LB/SQ FT (MILLED HMA, AGED HMA)
BITUMINOUS MATERIALS (TACK COAT)	0.025 LB/SQ FT (FOG COAT BETWEEN HMA LIFTS)
HOT-MIX ASPHALT (SURFACE/BINDER/BASE)	0.056 TONS/SQ YD/IN
MULCH, METHOD 2	2.0 TONS/ACRE
NITROGEN FERTILIZER NUTRIENT	90 LBS/ACRE
PHOSPHORUS FERTILIZER NUTRIENT	90 LBS/ACRE
POTASSIUM FERTILIZER NUTRIENT	90 LBS/ACRE

STATE OF ILLINOIS
DEPARTMENT OF TRANSPORTATION
DIVISION OF HIGHWAYS
DISTRICT 6

EXAMINED November 22, 20 24
ENGINEER OF OPERATIONS

EXAMINED December 9, 20 24
ENGINEER OF PROJECT IMPLEMENTATION

EXAMINED December 11, 20 24
ENGINEER OF PROGRAM DEVELOPMENT

MIX DESIGN TABLE

LOCATION:	I-155		I-55	
MIXTURE USE(S):	HMA SURFACE COURSE	HMA SHOULDERS	HMA SHOULDERS, 10 1/2"	HMA SHOULDERS (1 1/2")
PG:	SBS PG 70-28	PG 64-22	PG 64-22	SBS PG 70-28
DESIGN AIR VOIDS:	4.0% @ N70	4.0% @ N50	4.0% @ N90	4.0% @ N90
MIXTURE COMPOSITION (GRADATION MIXTURE)	IL-9.5	IL-9.5	IL-19.0	IL 9.5
FRICTION AGGREGATE:	MIX "D"	MIX "C"	N/A	MIX "C"
MIXTURE WEIGHTS	112 LB/SY/IN	112 LB/SY/IN	112 LB/SY/IN	112 LB/SY/IN
QUALITY MANAGEMENT	QC/QA	QC/QA	QC/QA	QC/QA
SUBLOT SIZE	N/A	N/A	N/A	N/A
MTD:	NO	NO	NO	NO

NOTE: NUCLEAR GAUGE WILL BE USED FOR DENSITY VERIFICATION BY THE ENGINEER ON ALL QC/QA ITEMS.

REV - MS

CODE NO.	ITEM	UNIT	TOTAL QUANTITY	6-01039-0000 CONSTR. CODE NHPP FUNDING 90% FED 10% STATE BRIDGE 0013 054-0050 RURAL	6-01040-0000 CONSTR. CODE NHPP FUNDING 90% FED 10% STATE BRIDGE 0013 054-0051 RURAL
20200100	EARTH EXCAVATION	CU YD	50	25	25
21400100	GRADING AND SHAPING DITCHES	FOOT	400	200	200
25000200	SEEDING, CLASS 2	ACRE	0.25	0.125	0.125
25000400	NITROGEN FERTILIZER NUTRIENT	POUND	24	12	12
25000500	PHOSPHORUS FERTILIZER NUTRIENT	POUND	24	12	12
25000600	POTASSIUM FERTILIZER NUTRIENT	POUND	24	12	12
25000700	AGRICULTURAL GROUND LIMESTONE	TON	0.8	0.4	0.4
25100115	MULCH, METHOD 2	ACRE	0.25	0.125	0.125
28000250	TEMPORARY EROSION CONTROL SEEDING	POUND	40	20	20
35101600	AGGREGATE BASE COURSE, TYPE B 4"	SQ YD	355	252	103
40600290	BITUMINOUS MATERIALS (TACK COAT)	POUND	1709	1227	482
40600372	LONGITUDINAL JOINT SEALANT, HALF-WIDTH	FOOT	1564	1068	496
40600990	TEMPORARY RAMP	SQ YD	92	92	
40604162	POLYMERIZED HOT-MIX ASPHALT SURFACE COURSE, IL-9.5, MIX "D", N70	TON	157	120	37

CODE NO.	ITEM	UNIT	TOTAL QUANTITY	6-01039-0000 CONSTR. CODE NHPP FUNDING 90% FED 10% STATE BRIDGE 0013 054-0050 RURAL	6-01040-0000 CONSTR. CODE NHPP FUNDING 90% FED 10% STATE BRIDGE 0013 054-0051 RURAL
42000060	WELDED WIRE REINFORCEMENT	SQ YD	242	170.5	71.5
42000080	PAVEMENT CONNECTOR (PCC) FOR BRIDGE APPROACH SLAB	SQ YD	406	287	119
42001300	PROTECTIVE COAT	SQ YD	406	287	119
44000100	PAVEMENT REMOVAL	SQ YD	242	170.5	71.5
44000155	HOT-MIX ASPHALT SURFACE REMOVAL, 1 1/2"	SQ YD	3138	2436	702
44004250	PAVED SHOULDER REMOVAL	SQ YD	1727	905	822
48102100	AGGREGATE WEDGE SHOULDER, TYPE B	TON	130	27	103
48203039	HOT-MIX ASPHALT SHOULDERS, 10 1/2"	SQ YD	1422	711	711
48203100	HOT-MIX ASPHALT SHOULDERS	TON	226	141	85
48300500	PORTLAND CEMENT CONCRETE SHOULDERS 10"	SQ YD	28	11	17
50102400	CONCRETE REMOVAL	CU YD	78.4	51.9	26.5
50104701	REMOVAL OF EXISTING CONCRETE DECK NO. 1	EACH	1	1	
50104702	REMOVAL OF EXISTING CONCRETE DECK NO. 2	EACH	1		1
50157300	PROTECTIVE SHIELD	SQ YD	587	359	228

REV - MS

MODEL: SOQ-2 [Sheet]
FILE NAME: C:\SP\WHKS & CO\Jobs-Spring - Projects\Civil Design\9490 D-6 On-Call\9490.03 I-55 155 Deck Replacements\CADD10.12\CADD Data\Sheets\D672220-SHT-SOQ.dgn

design firm no. 184001036 whks engineers + planners + land surveyors

USER NAME = gjameson	DESIGNED - BJJ	REVISED -	
	DRAWN - BJJ	REVISED -	
PLOT SCALE = 0.16666633 ' / in.	CHECKED - RKA	REVISED -	
PLOT DATE = 12/19/2024	DATE - 11/9/2023	REVISED -	

STATE OF ILLINOIS
DEPARTMENT OF TRANSPORTATION

SUMMARY OF QUANTITIES
I-155 BRIDGE DECK REPLACEMENTS

SCALE: 1"=50' | SHEET 2 OF 8 SHEETS | STA. TO STA.

F.A.I. RTE.	SECTION	COUNTY	TOTAL SHEETS	SHEET NO.
155	(54-4HB)D	LOGAN	133	4

CONTRACT NO. 72220

ILLINOIS | FED. AID PROJECT

CODE NO.	ITEM	UNIT	TOTAL QUANTITY	6-01039-0000 CONSTR. CODE NHPP FUNDING 90% FED 10% STATE BRIDGE 0013 054-0050 RURAL	6-01040-0000 CONSTR. CODE NHPP FUNDING 90% FED 10% STATE BRIDGE 0013 054-0051 RURAL
50200100	STRUCTURE EXCAVATION	CU YD	131	98	33
50300100	FLOOR DRAINS	EACH	6	6	
50300225	CONCRETE STRUCTURES	CU YD	56.4	25.4	31
50300255	CONCRETE SUPERSTRUCTURE	CU YD	576.9	317.4	259.5
50300300	PROTECTIVE COAT	SQ YD	2196	1035	1161
50301350	CONCRETE SUPERSTRUCTURE (APPROACH SLAB)	CU YD	199.9	118.8	81.1
50400805	FURNISHING AND ERECTING PRECAST PRESTRESSED CONCRETE I-BEAMS, 36 IN.	FOOT	288	288	
50500505	STUD SHEAR CONNECTORS	EACH	2580		2580
Z0010501	CLEANING AND PAINTING STEEL BRIDGE NO. 1	L SUM	1	1	
Z0010502	CLEANING AND PAINTING STEEL BRIDGE NO. 2	L SUM	1		1
50800205	REINFORCEMENT BARS, EPOXY COATED	POUND	230480	130220	100260
50800515	BAR SPLICERS	EACH	953	953	
51500100	NAME PLATES	EACH	2	1	1

REV - MS

CODE NO.	ITEM	UNIT	TOTAL QUANTITY	6-01039-0000 CONSTR. CODE NHPP FUNDING 90% FED 10% STATE BRIDGE 0013 054-0050 RURAL	6-01040-0000 CONSTR. CODE NHPP FUNDING 90% FED 10% STATE BRIDGE 0013 054-0051 RURAL
52000110	PREFORMED JOINT STRIP SEAL	FOOT	172	110	62
52100520	ANCHOR BOLTS, 1"	EACH	80	48	32
52200010	TEMPORARY SHEET PILING	SQ FT	133	133	
54213447	END SECTIONS 12"	EACH	3	1	2
58600101	GRANULAR BACKFILL FOR STRUCTURES	CU YD	109	75	34
58700300	CONCRETE SEALER	SQ FT	700	329	371
60100945	PIPE DRAINS 12"	FOOT	252	106	146
60500060	REMOVING INLETS	EACH	3	1	2
61000335	TYPE G INLET BOX, STANDARD 610001	EACH	3	1	2
* 63000001	STEEL PLATE BEAM GUARDRAIL, TYPE A, 6 FOOT POSTS	FOOT	2675	450	2225

* SPECIALTY ITEM

REV - MS

MODEL: SOQ-4 [Sheet]
FILE NAME: C:\SP\WHKS & CO\Jobs-Spring - Projects\Civil Design\9490 D-6 On-Call\9490.03 I-55 155 Deck Replacements\CADD10.12\CADD Data\Sheets\D672220-SHT-SOQ.dgn

design firm no. 184001036 whks engineers + planners + land surveyors

USER NAME = gjameson	DESIGNED - BJJ	REVISED -	
	DRAWN - BJJ	REVISED -	
PLOT SCALE = 0.16666633 ' / in.	CHECKED - RKA	REVISED -	
PLOT DATE = 12/19/2024	DATE - 11/9/2023	REVISED -	

STATE OF ILLINOIS
DEPARTMENT OF TRANSPORTATION

SUMMARY OF QUANTITIES
I-155 BRIDGE DECK REPLACEMENTS

SCALE: 1"=50' | SHEET 4 OF 8 SHEETS | STA. TO STA.

F.A.I. RTE.	SECTION	COUNTY	TOTAL SHEETS	SHEET NO.
155	(54-4HB)D	LOGAN	133	6

CONTRACT NO. 72220

ILLINOIS | FED. AID PROJECT

	CODE NO.	ITEM	UNIT	TOTAL QUANTITY	6-01039-0000 CONSTR. CODE NHPP FUNDING 90% FED 10% STATE BRIDGE 0013 054-0050 RURAL	6-01040-0000 CONSTR. CODE NHPP FUNDING 90% FED 10% STATE BRIDGE 0013 054-0051 RURAL
*	63100045	TRAFFIC BARRIER TERMINAL, TYPE 2	EACH	2		2
*	63100070	TRAFFIC BARRIER TERMINAL, TYPE 5	EACH	2		2
*	63100085	TRAFFIC BARRIER TERMINAL, TYPE 6	EACH	4	2	2
*	63100167	TRAFFIC BARRIER TERMINAL, TYPE 1 (SPECIAL) TANGENT	EACH	4	2	2
	63200310	GUARDRAIL REMOVAL	FOOT	3147	646	2501
	64200116	SHOULDER RUMBLE STRIPS, 16 INCH	FOOT	3236	1968	1268
	66201120	CONCRETE SHOULDER CURB	FOOT	43	17	26
	67000400	ENGINEER'S FIELD OFFICE, TYPE A	CAL MO	18	9	9
	67100100	MOBILIZATION	L SUM	1	0.5	0.5
	70100800	TRAFFIC CONTROL AND PROTECTION, STANDARD 701401	L SUM	1	0.5	0.5
	70100820	TRAFFIC CONTROL AND PROTECTION, STANDARD 701451	L SUM	1	0.5	0.5
	70107025	CHANGEABLE MESSAGE SIGN	CAL DA	360	180	180
	70200100	NIGHTTIME WORK ZONE LIGHTING	L SUM	1	0.5	0.5
	70300100	SHORT TERM PAVEMENT MARKING	FOOT	363	213	150

* SPECIALTY ITEM

MODEL: SOQ-5 [Sheet]
FILE NAME: C:\SP\WHKS & CO\Jobs-Spring - Projects\Civil Design\9490 D-6 On-Call\9490.03 I-55 155 Deck Replacements\CADD10.12\CADD Data\Sheets\D672220-SHT-SOQ.dgn

design firm no. 184001036 whks engineers + planners + land surveyors

USER NAME = gjameson	DESIGNED - BJJ	REVISED -
	DRAWN - BJJ	REVISED -
PLOT SCALE = 0.16666633 ' / in.	CHECKED - RKA	REVISED -
PLOT DATE = 12/19/2024	DATE - 11/9/2023	REVISED -

STATE OF ILLINOIS
DEPARTMENT OF TRANSPORTATION

SUMMARY OF QUANTITIES
I-155 BRIDGE DECK REPLACEMENTS

SCALE: 1"=50' | SHEET 5 OF 8 SHEETS | STA. TO STA.

F.A.I. RTE.	SECTION	COUNTY	TOTAL SHEETS	SHEET NO.
155	(54-4HB)D	LOGAN	133	7

CONTRACT NO. 72220

ILLINOIS | FED. AID PROJECT

CODE NO.	ITEM	UNIT	TOTAL QUANTITY	6-01039-0000 CONSTR. CODE NHPP FUNDING 90% FED 10% STATE BRIDGE 0013 054-0050 RURAL	6-01040-0000 CONSTR. CODE NHPP FUNDING 90% FED 10% STATE BRIDGE 0013 054-0051 RURAL
70300150	SHORT TERM PAVEMENT MARKING REMOVAL	SQ FT	152	89	63
70400100	TEMPORARY CONCRETE BARRIER	FOOT	525	525	
70400200	RELOCATE TEMPORARY CONCRETE BARRIER	FOOT	525	525	
70600260	IMPACT ATTENUATORS, TEMPORARY (FULLY REDIRECTIVE, NARROW), TEST LEVEL 3	EACH	1	1	
70600332	IMPACT ATTENUATORS, RELOCATE (FULLY REDIRECTIVE, NARROW), TEST LEVEL 3	EACH	1	1	
* 72501000	TERMINAL MARKER - DIRECT APPLIED	EACH	4	2	2
* 78009005	MODIFIED URETHANE PAVEMENT MARKING - LINE 5"	FOOT	3240	2040	1200
* 78100100	RAISED REFLECTIVE PAVEMENT MARKER	EACH	46	30	16
* 78200005	GUARDRAIL REFLECTORS, TYPE A	EACH	34	8	26
* 78200011	BARRIER WALL REFLECTORS, TYPE C	EACH	16	8	8
78300200	RAISED REFLECTIVE PAVEMENT MARKER REMOVAL	EACH	46	30	16
78300201	PAVEMENT MARKING REMOVAL - GRINDING	SQ FT	758	758	
X2503000	MAINTENANCE MOWING	ACRE	5.2	3	2.2
X4421389	CLASS C PATCHES, TYPE II, 13 INCH (SPECIAL)	SQ YD	100	50	50

* SPECIALTY ITEM

MODEL: SOQ-6 [Sheet]
FILE NAME: C:\SP\WHKS & CO\Jobs-Spring - Projects\Civil Design\9490 D-6 On-Call\9490.03 I-55 155 Deck Replacements\CADD10.12\CADD Data\Sheets\D672220-SHT-SOQ.dgn

design firm no. 184001036 whks engineers + planners + land surveyors

USER NAME = gjameson	DESIGNED - BJJ	REVISED -
	DRAWN - BJJ	REVISED -
PLOT SCALE = 0.16666633 ' / in.	CHECKED - RKA	REVISED -
PLOT DATE = 12/19/2024	DATE - 11/9/2023	REVISED -

STATE OF ILLINOIS
DEPARTMENT OF TRANSPORTATION

SUMMARY OF QUANTITIES
I-155 BRIDGE DECK REPLACEMENTS

SCALE: 1"=50' | SHEET 6 OF 8 SHEETS | STA. TO STA.

F.A.I. RTE.	SECTION	COUNTY	TOTAL SHEETS	SHEET NO.
155	(54-4HB)D	LOGAN	133	8

CONTRACT NO. 72220

ILLINOIS | FED. AID PROJECT

CODE NO.	ITEM	UNIT	TOTAL QUANTITY	6-01039-0000 CONSTR. CODE NHPP FUNDING 90% FED 10% STATE BRIDGE 0013 054-0050 RURAL	6-01040-0000 CONSTR. CODE NHPP FUNDING 90% FED 10% STATE BRIDGE 0013 054-0051 RURAL
X4421394	CLASS C PATCHES, TYPE III, 13 INCH (SPECIAL)	SQ YD	100	50	50
X5010523	REMOVE CONCRETE END SECTION	EACH	3	1	2
X5030250	BRIDGE DECK GROOVING (LONGITUDINAL)	SQ YD	1065	517	548
X5080530	BAR TERMINATORS	EACH	183	60	123
X5211410	HIGH LOAD MULTI-ROTATIONAL BEARINGS, DISC, FIXED - 200K	EACH	6	6	
X6010003	PIPE DRAIN REMOVAL	FOOT	226	88	138
X5211610	HIGH LOAD MULTI-ROTATIONAL BEARINGS, DISC, GUIDED EXPANSION - 200K	EACH	14	6	8
X7010208	TRAFFIC CONTROL AND PROTECTION, STANDARD 701402 (SPECIAL)	EACH	1	1	
X7200201	WIDTH RESTRICTION SIGNING	L SUM	1	1	
Z0001899	JACK AND REMOVE EXISTING BEARINGS	EACH	20	12	8
Z0001905	STRUCTURAL STEEL REPAIR	POUND	12090	9310	2780
Z0003615	REMOVAL OF EXISTING CONCRETE I-BEAM	EACH	8	8	
Z0004552	APPROACH SLAB REMOVAL	SQ YD	303	187	116
Z0007101	CONTAINMENT AND DISPOSAL OF LEAD PAINT CLEANING RESIDUES NO. 1	L SUM	1	1	
Z0007102	CONTAINMENT AND DISPOSAL OF LEAD PAINT CLEANING RESIDUES NO. 2	L SUM	1		1
Z0012754	STRUCTURAL REPAIR OF CONCRETE (DEPTH EQUAL TO OR LESS THAN 5 INCHES)	SQ FT	152	150	2

REV - MS

CODE NO.	ITEM	UNIT	TOTAL QUANTITY	6-01039-0000 CONSTR. CODE NHPP FUNDING 90% FED 10% STATE BRIDGE 0013 054-0050 RURAL	6-01040-0000 CONSTR. CODE NHPP FUNDING 90% FED 10% STATE BRIDGE 0013 054-0051 RURAL
Z0013798	CONSTRUCTION LAYOUT	L SUM	1	0.5	0.5
Z0016702	DETOUR SIGNING	L SUM	1	0.5	0.5
Z0029090	DIAMOND GRINDING (BRIDGE SECTION)	SQ YD	1769	1015	754
Z0032300	JACK EXI STING SUPER STRUCTURE	L SUM	1	1	
Z0065700	SLOPE WALL REPAIR	SQ YD	15.3	15.3	
Z0065730	SLOPE WALL SLURRY PUMPING	CU YD	3.4	3.4	
Ø Z0076600	TRAINEES	HOUR	2500	2500	
Ø Z0076604	TRAINEES TRAINING PROGRAM GRADUATE	HOUR	2500	2500	

Ø 0042

REV - MS

MODEL: SOQ-8 [Sheet]
FILE NAME: C:\SP\WHKS & COUobs-Spring - Projects\Civil Design\9490 D-6 On-Call\9490.03 I-55 155 Deck Replacements\CADD10.12\CADD Data\Sheets\D672220-SHT-SOQ.dgn

design firm no. 184001036 whks engineers + planners + land surveyors

USER NAME = gjameson	DESIGNED - BJJ	REVISED -	
	DRAWN - BJJ	REVISED -	
PLOT SCALE = 0.16666633 ' / in.	CHECKED - RKA	REVISED -	
PLOT DATE = 12/19/2024	DATE - 11/9/2023	REVISED -	

STATE OF ILLINOIS
DEPARTMENT OF TRANSPORTATION

SUMMARY OF QUANTITIES
I-155 BRIDGE DECK REPLACEMENTS

SCALE: 1"=50' | SHEET 8 OF 8 SHEETS | STA. | TO STA.

F.A.I. RTE.	SECTION	COUNTY	TOTAL SHEETS	SHEET NO.
155	(54-4HB)D	LOGAN	133	10

CONTRACT NO. 72220

ILLINOIS | FED. AID PROJECT

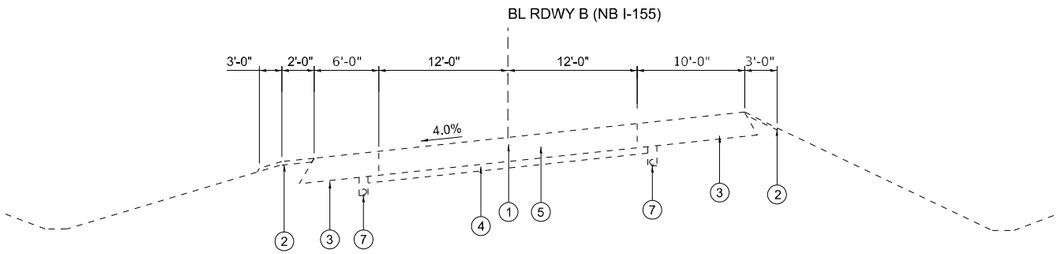

EXISTING TYPICAL SECTION

(LOOKING NORTH)
STA. 14+97.53 TO STA. 18+05.31

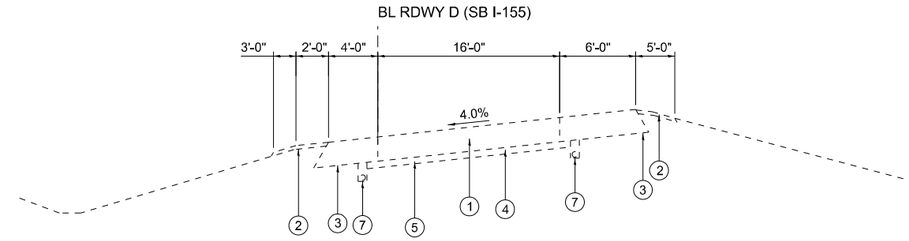

EXISTING TYPICAL SECTION

(LOOKING EAST)
STA. 15+30.46 TO STA. 18+73.87

EXISTING LEGEND

1. EX LONGITUDINAL JOINT
2. EX AGGREGATE SHOULDERS
3. EX BITUMINOUS SHOULDERS
4. EX STABILIZED SUBBASE 4"
5. EX CRC PAVEMENT 9"
6. EX BITUMINOUS CONCRETE
7. EX PIPE UNDERDRAINS

BRIDGE OMISSION
STA. 15+26.98 TO STA. 17+80.87

BRIDGE OMISSION
STA. 15+45.11 TO STA. 18+61.17

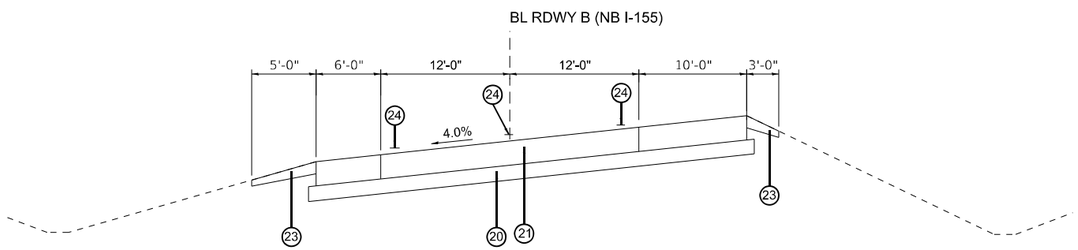

PROPOSED TYPICAL SECTION

(LOOKING NORTH)
STA. 14+97.53 TO STA. 18+05.31

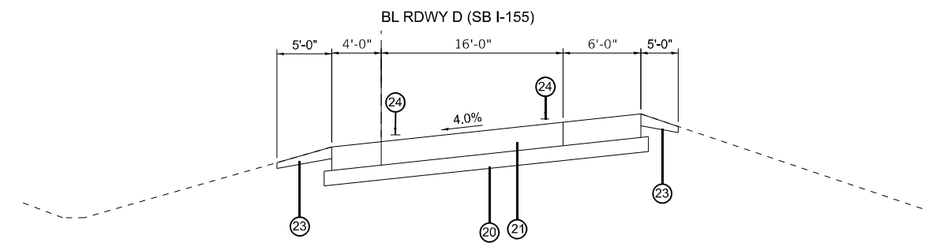

PROPOSED TYPICAL SECTION

(LOOKING EAST)
STA. 15+30.46 TO STA. 18+73.87

PROPOSED LEGEND

20. AGGREGATE BASE COURSE, TYPE B, 4"
21. PAVEMENT CONNECTOR (PCC) FOR BRIDGE APPROACH SLAB
22. PR HOT-MIX ASPHALT SHOULDERS 10-1/2"
23. PR AGGREGATE WEDGE SHOULDER, TYPE B
24. PR PAVEMENT MARKING
25. LONGITUDINAL JOINT SEALANT
26. PR HOT-MIX ASPHALT SURFACE REMOVAL 1-1/2"
27. PR HOT-MIX ASPHALT SURFACE COURSE, (1-1/2")
28. PR HOT-MIX ASPHALT SHOULDERS (1-1/2")
29. SHOULDER RUMBLE STRIPS, 16 IN.

PR PAVED SHOULDER REMOVAL

* ALL RUMBLE STRIPS SHALL BE INSTALLED AFTER STAGE CONSTRUCTION COMPLETE.

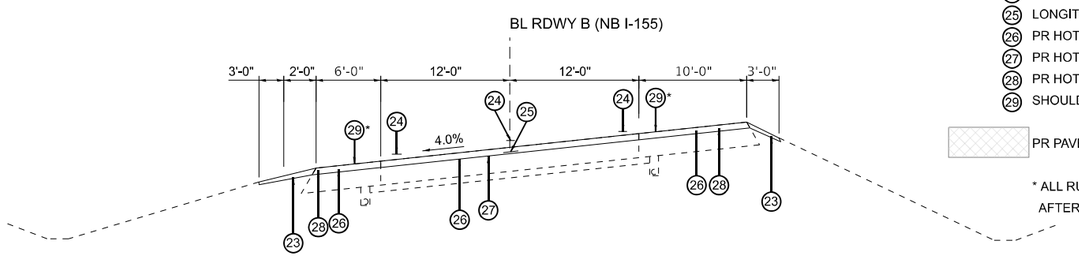

PROPOSED TYPICAL SECTION

(LOOKING NORTH)
STA. 12+00.00 TO STA. 14+97.53
STA. 18+05.31 TO STA. 20+50.00

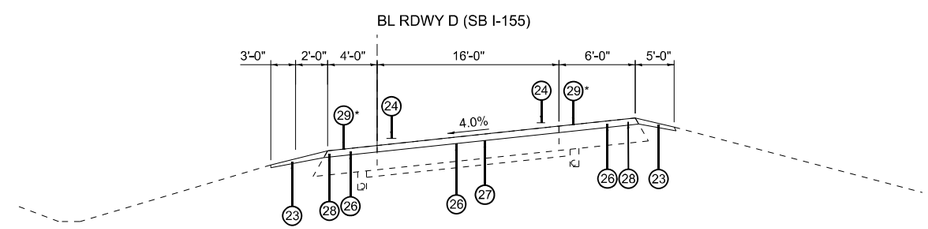

PROPOSED TYPICAL SECTION

(LOOKING EAST)
STA. 14+00.00 TO STA. 15+30.46
STA. 18+73.87 TO STA. 20+00.00

MODEL: TYP 1 [Sheet]
FILE NAME: C:\SP\WHKS & CO\Jobs-Spring - Projects\Civil Design\9490 D-6 On-Call\9490.03 I-55 155 Deck Replacements\CADD10.12\CADD Data\Sheets\D672220-SHT-typical.dgn

design firm no. 184001036 whks engineers + planners + land surveyors

USER NAME = gjameson	DESIGNED - BJJ	REVISED -	
	DRAWN - BJJ	REVISED -	
PLOT SCALE = 0.16666633 ' / in.	CHECKED - RKA	REVISED -	
PLOT DATE = 12/19/2024	DATE - 11/9/2023	REVISED -	

STATE OF ILLINOIS
DEPARTMENT OF TRANSPORTATION

TYPICAL SECTIONS
I-155 BRIDGE DECK REPLACEMENTS

SCALE: 1"=10' | SHEET 1 OF 2 SHEETS | STA. TO STA.

F.A.I. RTE.	SECTION	COUNTY	TOTAL SHEETS	SHEET NO.
155	(54-4HB)D	LOGAN	133	11

CONTRACT NO. 72220

ILLINOIS | FED. AID PROJECT

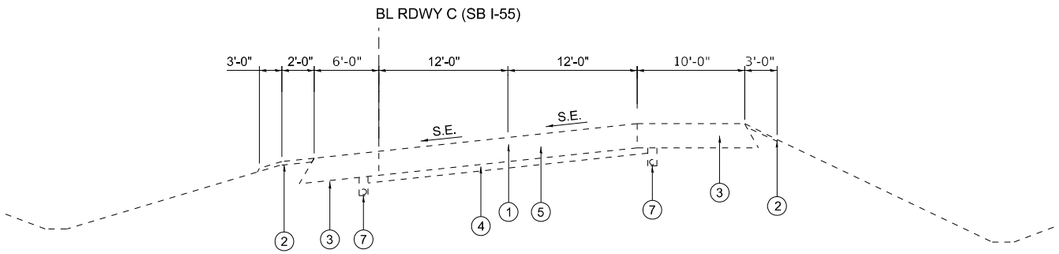

EXISTING TYPICAL SECTION

(LOOKING SOUTH)
STA. 20+00.00 TO STA. 28+00.00

EXISTING LEGEND

1. EX LONGITUDINAL JOINT
2. EX AGGREGATE SHOULDERS
3. EX BITUMINOUS SHOULDERS
4. EX STABILIZED SUBBASE 4"
5. EX CRC PAVEMENT 9"
6. EX BITUMINOUS CONCRETE
7. EX PIPE UNDERDRAINS

PROPOSED LEGEND

20. AGGREGATE BASE COURSE, TYPE B, 4"
21. PAVEMENT CONNECTOR (PCC) FOR BRIDGE APPROACH SLAB
22. PR HOT-MIX ASPHALT SHOULDERS 10-1/2"
23. PR AGGREGATE WEDGE SHOULDER, TYPE B
24. PR PAVEMENT MARKING
25. LONGITUDINAL JOINT SEALANT
26. PR HOT-MIX ASPHALT SURFACE REMOVAL 1-1/2"
27. PR HOT-MIX ASPHALT SURFACE COURSE, (1-1/2")
28. PR HOT-MIX ASPHALT SHOULDERS (1-1/2")
29. SHOULDER RUMBLE STRIPS, 16 IN.

PR PAVED SHOULDER REMOVAL

* ALL RUMBLE STRIPS SHALL BE INSTALLED AFTER STAGE CONSTRUCTION COMPLETE.

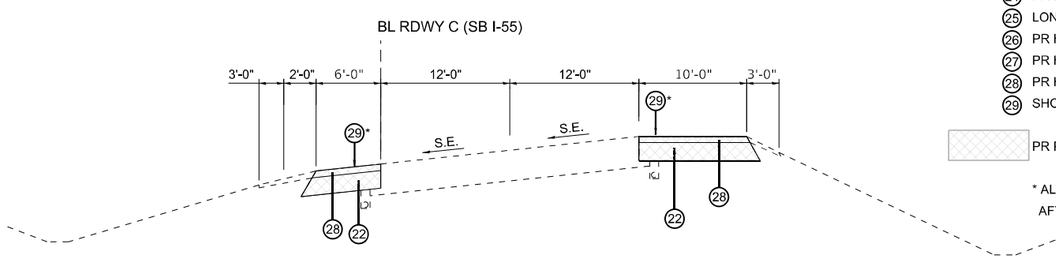

PROPOSED TYPICAL SECTION

(LOOKING SOUTH)
STA. 20+00.00 TO STA. 28+00.00

MODEL: TYP 2 [Sheet]
FILE NAME: C:\SP\WHKS & CO\Jobs-Spring - Projects\Civil Design\9490 D-6 On-Call\9490.03 I-55 155 Deck Replacements\CADD10.12\CADD Data\Sheets\D672220-SHT-typical.dgn

design firm no. 184001036 whks engineers + planners + land surveyors	USER NAME = bjohnson	DESIGNED - BJJ	REVISED -	STATE OF ILLINOIS DEPARTMENT OF TRANSPORTATION	TYPICAL SECTIONS I-155 BRIDGE DECK REPLACEMENTS
		DRAWN - BJJ	REVISED -		
	PLOT SCALE = 0.16666633 ' / in.	CHECKED - RKA	REVISED -		
	PLOT DATE = 12/19/2024	DATE - 11/9/2023	REVISED -		SCALE: 1"=10' SHEET 2 OF 2 SHEETS STA. TO STA.

F.A.I. RTE.	SECTION	COUNTY	TOTAL SHEETS	SHEET NO.
155	(54-4HB)D	LOGAN	133	12
		CONTRACT NO. 72220		
	ILLINOIS	FED. AID PROJECT		

20200100 EARTH EXCAVATION

I-155 N.B.						CU YD
LT	12+00.00	TO	LT	20+50.00		12.5
RT	12+00.00	TO	RT	20+50.00		12.5
I-155 S.B.						
LT	12+00.00	TO	LT	20+50.00		12.5
RT	12+00.00	TO	RT	20+50.00		12.5
					TOTAL	50

21400100 GRADING AND SHAPING DITCHES

I-55 S.B.						FOOT
LT	25+00.00	TO	LT	27+00.00		200
RT	25+00.00	TO	RT	27+00.00		200
					TOTAL	400

25000200 SEEDING, CLASS 2

I-155 N.B.						ACRE
LT	12+00.00	TO	LT	15+26.98		0.03
RT	12+00.00	TO	RT	15+26.98		0.03
LT	17+80.87	TO	LT	20+50.00		0.03
RT	17+80.87	TO	RT	20+50.00		0.03
I-155 S.B.						
LT	12+00.00	TO	LT	15+45.11		0.03
RT	12+00.00	TO	RT	15+45.11		0.03
LT	18+61.17	TO	LT	20+50.00		0.03
RT	18+61.17	TO	RT	20+50.00		0.03
					TOTAL	0.25

25000400 NITROGEN FERTILIZER NUTRIENT

I-155 N.B.						POUND
LT	12+00.00	TO	LT	15+26.98		3
RT	12+00.00	TO	RT	15+26.98		3
LT	17+80.87	TO	LT	20+50.00		3
RT	17+80.87	TO	RT	20+50.00		3
I-155 S.B.						
LT	12+00.00	TO	LT	15+45.11		3
RT	12+00.00	TO	RT	15+45.11		3
LT	18+61.17	TO	LT	20+50.00		3
RT	18+61.17	TO	RT	20+50.00		3
					TOTAL	24

25000500 PHOSPHORUS FERTILIZER NUTRIENT

I-155 N.B.						POUND
LT	12+00.00	TO	LT	15+26.98		3
RT	12+00.00	TO	RT	15+26.98		3
LT	17+80.87	TO	LT	20+50.00		3
RT	17+80.87	TO	RT	20+50.00		3
I-155 S.B.						
LT	12+00.00	TO	LT	15+45.11		3
RT	12+00.00	TO	RT	15+45.11		3
LT	18+61.17	TO	LT	20+50.00		3
RT	18+61.17	TO	RT	20+50.00		3
					TOTAL	24

25000600 POTASSIUM FERTILIZER NUTRIENT

I-155 N.B.						POUND
LT	12+00.00	TO	LT	15+26.98		3
RT	12+00.00	TO	RT	15+26.98		3
LT	17+80.87	TO	LT	20+50.00		3
RT	17+80.87	TO	RT	20+50.00		3
I-155 S.B.						
LT	12+00.00	TO	LT	15+45.11		3
RT	12+00.00	TO	RT	15+45.11		3
LT	18+61.17	TO	LT	20+50.00		3
RT	18+61.17	TO	RT	20+50.00		3
					TOTAL	24

25000700 AGRICULTURAL GROUND LIMESTONE

I-155 N.B.						TON
LT	12+00.00	TO	LT	15+26.98		0.1
RT	12+00.00	TO	RT	15+26.98		0.1
LT	17+80.87	TO	LT	20+50.00		0.1
RT	17+80.87	TO	RT	20+50.00		0.1
I-155 S.B.						
LT	12+00.00	TO	LT	15+45.11		0.1
RT	12+00.00	TO	RT	15+45.11		0.1
LT	18+61.17	TO	LT	20+50.00		0.1
RT	18+61.17	TO	RT	20+50.00		0.1
					TOTAL	0.8

25100115 MULCH, METHOD 2

I-155 N.B.						ACRE
LT	12+00.00	TO	LT	15+26.98		0.03
RT	12+00.00	TO	RT	15+26.98		0.03
LT	17+80.87	TO	LT	20+50.00		0.03
RT	17+80.87	TO	RT	20+50.00		0.03
I-155 S.B.						
LT	12+00.00	TO	LT	15+45.11		0.03
RT	12+00.00	TO	RT	15+45.11		0.03
LT	18+61.17	TO	LT	20+50.00		0.03
RT	18+61.17	TO	RT	20+50.00		0.03
					TOTAL	0.25

28000250 TEMPORARY EROSION CONTROL SEEDING

I-155 N.B.						POUND
LT	12+00.00	TO	LT	15+26.98		5
RT	12+00.00	TO	RT	15+26.98		5
LT	17+80.87	TO	LT	20+50.00		5
RT	17+80.87	TO	RT	20+50.00		5
I-155 S.B.						
LT	12+00.00	TO	LT	15+45.11		5
RT	12+00.00	TO	RT	15+45.11		5
LT	18+61.17	TO	LT	20+50.00		5
RT	18+61.17	TO	RT	20+50.00		5
					TOTAL	40

35101600 AGGREGATE BASE COURSE, TYPE B 4"

I-155 N.B.						SQ YD
CL	14+93.18	TO	CL	15+22.43		129
CL	17+81.10	TO	CL	18+10.48		123
I-155 S.B.						
CL	15+25.58	TO	CL	15+42.11		44
CL	18+64.17	TO	CL	18+78.90		59
					TOTAL	355

40600290 BITUMINOUS MATERIALS (TACK COAT)

I-155 N.B.						POUND
CL	12+00.00	TO	CL	14+93.18		587
CL	18+10.48	TO	CL	20+50.00		480
I-155 S.B.						
CL	14+00.00	TO	CL	15+25.58		164
CL	18+78.90	TO	CL	20+00.00		158
I-55 S.B.						
LT	20+00.00	TO	LT	28+00.00		120
RT	20+00.00	TO	RT	28+00.00		200
					TOTAL	1,709

40600372 LONGITUDINAL JOINT SEALANT, HALF-WIDTH

I-155 N.B.						FOOT
CL	12+00.00	TO	CL	14+93.18		588
CL	18+10.48	TO	CL	20+50.00		480
I-155 S.B.						
CL	14+00.00	TO	CL	15+25.58		252
CL	18+78.90	TO	CL	20+00.00		244
					TOTAL	1,564

40600990 TEMPORARY RAMP

I-155 N.B.						SQ YD
CL	14+93.18	TO	CL	14+98.18		23
CL	15+20.43	TO	CL	15+25.43		23
CL	17+78.10	TO	CL	17+83.10		23
CL	18+05.48	TO	CL	18+10.48		23
					TOTAL	92

40604162 POLYMERIZED HOT-MIX ASPHALT SURFACE COURSE, IL-9.5, MIX "D", N70

I-155 N.B.						TON
CL	12+00.00	TO	CL	14+93.18		65
CL	18+10.48	TO	CL	20+50.00		55
I-155 S.B.						
CL	14+00.00	TO	CL	15+25.58		19
CL	18+78.90	TO	CL	20+00.00		18
					TOTAL	157

42000060 WELDED WIRE REINFORCEMENT

						SQ YD
I-155 N.B.						
CL	14+93.18	TO	CL	15+25.43		83
CL	17+78.10	TO	CL	18+10.48		88
I-155 S.B.						
CL	15+25.58	TO	CL	15+45.11		32
CL	18+61.17	TO	CL	18+78.90		40
					TOTAL	242

42000080 PAVEMENT CONNECTOR (PCC) FOR BRIDGE APPROACH SLAB

						SQ YD
I-155 N.B.						
CL	14+93.18	TO	CL	15+25.43		145
CL	17+78.10	TO	CL	18+10.48		142
I-155 S.B.						
CL	15+25.58	TO	CL	15+45.11		51
CL	18+61.17	TO	CL	18+78.90		68
					TOTAL	406

42001300 PROTECTIVE COAT

						SQ YD
I-155 N.B.						
CL	14+93.18	TO	CL	15+25.43		145
CL	17+78.10	TO	CL	18+10.48		142
I-155 S.B.						
CL	15+25.58	TO	CL	15+45.11		51
CL	18+61.17	TO	CL	18+78.90		68
					TOTAL	406

44000100 PAVEMENT REMOVAL

						SQ YD
I-155 N.B.						
CL	14+93.18	TO	CL	15+25.43		83
CL	17+78.10	TO	CL	18+10.48		88
I-155 S.B.						
CL	15+25.58	TO	CL	15+45.11		32
CL	18+61.17	TO	CL	18+78.90		40
					TOTAL	242

44000155 HOT-MIX ASPHALT SURFACE REMOVAL, 1 1/2"

						SQ YD
I-155 N.B.						
LT	12+00.00	TO	LT	15+22.00		215
CL/RT	12+00.00	TO	CL/RT	14+93.18		1,108
LT	17+37.50	TO	LT	20+50.00		208
CL/RT	18+10.48	TO	CL/RT	20+50.00		905
I-155 S.B.						
LT	14+00.00	TO	LT	15+11.54		50
CL/RT	14+00.00	TO	CL/RT	15+25.50		307
LT	18+90.92	TO	LT	20+00.00		49
CL/RT	18+78.74	TO	CL/RT	20+00.00		296
					TOTAL	3,138

44004250 PAVED SHOULDER REMOVAL

						SQ YD
I-155 N.B.						
LT	14+76.04	TO	LT	15+22.00		31
RT	14+93.18	TO	RT	15+45.00		58
LT	17+37.50	TO	LT	18+10.48		49
RT	17+60.00	TO	RT	18+10.48		56
I-155 S.B.						
LT	15+11.53	TO	LT	15+56.00		20
RT	15+25.53	TO	RT	15+72.00		31
LT	18+50.00	TO	LT	18+90.91		18
RT	18+16.00	TO	RT	18+78.90		42
I-55 S.B.						
LT	20+00.00	TO	LT	28+00.00		533
RT	20+00.00	TO	RT	28+00.00		889
					TOTAL	1,727

48102100 AGGREGATE WEDGE SHOULDER, TYPE B

						TON
I-155 N.B.						
LT	11+71.69	TO	LT	15+34.35		15
RT	12+86.98	TO	RT	15+69.67		12
I-155 S.B.						
RT	5+83.62	TO	RT	15+58.77		40
LT	9+25.63	TO	LT	15+66.16		27
RT	18+23.72	TO	RT	22+89.22		19
LT	18+40.18	TO	LT	22+57.35		17
					TOTAL	130

48203039 HOT-MIX ASPHALT SHOULDERS, 10 1/2"

						SQ YD
I-55 S.B.						
LT	20+00.00	TO	LT	28+00.00		533
RT	20+00.00	TO	RT	28+00.00		889
					TOTAL	1,422

48203100 HOT-MIX ASPHALT SHOULDERS

						TON
I-155 N.B.						
LT	12+00.00	TO	LT	14+76.00		16
RT	12+00.00	TO	RT	14+93.18		28
LT	18+10.48	TO	LT	20+50.00		14
RT	18+10.48	TO	RT	20+50.00		23
I-155 S.B.						
LT	14+00.00	TO	LT	15+11.54		5
RT	14+00.00	TO	RT	15+25.50		8
LT	18+90.92	TO	LT	20+00.00		5
RT	18+78.90	TO	RT	20+00.00		7
I-55 S.B.						
LT	20+00.00	TO	LT	28+00.00		45
RT	20+00.00	TO	RT	28+00.00		75
					TOTAL	226

48300500 PORTLAND CEMENT CONCRETE SHOULDERS 10"

						SQ YD
I-155 N.B.						
LT	14+76.03	TO	LT	14+93.18		11
I-155 S.B.						
LT	15+11.54	TO	LT	15+25.50		9
LT	18+78.74	TO	LT	18+90.92		8
					TOTAL	28

54213447 END SECTIONS 12"

						EACH
I-155 N.B.						
LT	14+81.06					1
I-155 S.B.						
LT	15+16.55					1
LT	18+85.91					1
					TOTAL	3

60100945 PIPE DRAINS 12"

						FOOT
I-155 N.B.						
LT	14+81.06					106
I-155 S.B.						
LT	15+16.55					52
LT	18+85.91					94
					TOTAL	252

60500060 REMOVING INLETS

						EACH
I-155 N.B.						
LT	15+28.98					1
I-155 S.B.						
LT	15+60.69					1
LT	18+43.09					1
					TOTAL	3

61000335 TYPE G INLET BOX, STANDARD 610001

						EACH
I-155 N.B.						
LT	14+81.06					1
I-155 S.B.						
LT	15+16.55					1
LT	18+85.91					1
					TOTAL	3

63000001 STEEL PLATE BEAM GUARDRAIL, TYPE A, 6 FOOT POSTS

						FOOT
I-155 N.B.						
LT	12+21.69	TO	LT	14+84.19		262.5
RT	13+36.98	TO	RT	15+24.48		187.5
I-155 S.B.						
RT	6+33.62	TO	RT	15+46.12		912.5
LT	9+75.63	TO	LT	15+25.63		550
RT	18+36.99	TO	RT	21+86.99		350
LT	18+53.45	TO	LT	22+65.95		412.5
					TOTAL	2,675

MODEL: SCH-2 [Sheet]
FILE NAME: C:\SP\WHKS & COJobs-Spring - Projects\Civil Design\9490 D-6 On-Call\9490.03 I-55 155 Deck Replacements\CADD10.12\CADD Data\Sheets\D672220-SHT-Schedule.dgn

63100045 TRAFFIC BARRIER TERMINAL, TYPE 2

I-155 S.B.					EACH
RT	22+76.72	TO	RT	22+89.22	1
LT	22+44.85	TO	LT	22+57.35	1
				TOTAL	2

63100070 TRAFFIC BARRIER TERMINAL, TYPE 5

I-155 S.B.					EACH
RT	18+23.72	TO	RT	18+36.99	1
LT	18+40.18	TO	LT	18+53.45	1
				TOTAL	2

63100085 TRAFFIC BARRIER TERMINAL, TYPE 6

I-155 N.B.					EACH
LT	14+97.45	TO	LT	15+34.35	1
RT	15+32.77	TO	RT	15+69.67	1
I-155 S.B.					
RT	15+21.87	TO	RT	15+58.77	1
LT	15+29.26	TO	LT	15+66.16	1
				TOTAL	4

63100167 TRAFFIC BARRIER TERMINAL, TYPE 1 (SPECIAL) TANGENT

I-155 N.B.					EACH
LT	11+71.69	TO	LT	12+21.69	1
RT	12+86.98	TO	RT	13+36.98	1
I-155 S.B.					
RT	5+83.62	TO	RT	6+33.62	1
LT	9+25.63	TO	LT	9+75.63	1
				TOTAL	4

63200310 GUARDRAIL REMOVAL

I-155 N.B.					FOOT
LT	11+71.69	TO	LT	15+34.35	363
RT	12+86.98	TO	RT	15+69.67	283
I-155 S.B.					
RT	5+83.62	TO	RT	15+58.77	976
LT	9+25.63	TO	LT	15+66.16	641
RT	18+23.72	TO	RT	22+89.22	466
LT	18+40.18	TO	LT	22+57.35	418
				TOTAL	3,147

64200116 SHOULDER RUMBLE STRIPS, 16 INCH

I-155 N.B.					FOOT
LT	12+00.00	TO	LT	15+22.00	322
RT	12+00.00	TO	RT	14+93.18	293
LT	17+37.50	TO	LT	20+50.00	313
RT	18+10.48	TO	RT	20+50.00	240
I-155 S.B.					
LT	14+00.00	TO	LT	15+11.54	112
RT	14+00.00	TO	RT	15+25.50	126
LT	18+90.92	TO	LT	20+00.00	109
RT	18+78.74	TO	RT	20+00.00	121
I-55 S.B.					
LT	20+00.00	TO	LT	28+00.00	800
RT	20+00.00	TO	RT	28+00.00	800
				TOTAL	3,236

66201120 CONCRETE SHOULDER CURB

I-155 N.B.					FOOT
LT	14+76.03	TO	LT	14+93.18	17
I-155 S.B.					
LT	15+11.54	TO	LT	15+25.50	14
LT	18+78.74	TO	LT	18+90.92	12
				TOTAL	43

70300100 SHORT TERM PAVEMENT MARKING

I-155 N.B.					FOOT
LT	12+00.00	TO	LT	20+50.00	85
CL	12+00.00	TO	CL	20+50.00	43
RT	12+00.00	TO	RT	20+50.00	85
I-155 S.B.					
LT	14+00.00	TO	LT	20+00.00	60
CL	14+00.00	TO	CL	20+00.00	30
RT	14+00.00	TO	RT	20+00.00	60
				TOTAL	363

70300150 SHORT TERM PAVEMENT MARKING REMOVAL

I-155 N.B.					SQ FT
LT	12+00.00	TO	LT	20+50.00	35
CL	12+00.00	TO	CL	20+50.00	18
RT	12+00.00	TO	RT	20+50.00	35
I-155 S.B.					
LT	14+00.00	TO	LT	20+00.00	25
CL	14+00.00	TO	CL	20+00.00	13
RT	14+00.00	TO	RT	20+00.00	25
				TOTAL	151

70400100 TEMPORARY CONCRETE BARRIER

I-155 N.B.					FOOT
RT/CL	12+77.50	TO	RT/CL	14+65.00	187.5
RT/CL	14+65.00	TO	RT/CL	18+02.50	337.5
				TOTAL	525

70400200 RELOCATE TEMPORARY CONCRETE BARRIER

I-155 N.B.					FOOT
LT/CL	12+77.50	TO	LT/CL	14+65.00	187.5
LT/CL	14+65.00	TO	LT/CL	18+02.50	337.5
				TOTAL	525

70600260 IMP ATTN TEMP FRN TL3

I-155 N.B.					EACH
RT	12+77.50				1
				TOTAL	1

70600332 IMP ATTN REL FRN TL3

I-155 N.B.					EACH
LT	12+77.50				1
				TOTAL	1

72501000 TERMINAL MARKER - DIRECT APPLIED

I-155 N.B.					EACH
LT	11+71.69				1
RT	12+86.98				1
I-155 S.B.					
RT	5+83.62				1
LT	9+25.63				1
				TOTAL	4

78009005 MODIFIED URETHANE PAVEMENT MARKING - LINE 5"

I-155 N.B.					FOOT
CL	4+00.00	TO	CL	8+50.00	120
LT	12+00.00	TO	LT	20+50.00	850
CL	12+00.00	TO	CL	20+50.00	220
RT	12+00.00	TO	RT	20+50.00	850
I-155 S.B.					
LT	14+00.00	TO	LT	20+00.00	600
RT	14+00.00	TO	RT	20+00.00	600
				TOTAL	3,240

78100100 RAISED REFLECTIVE PAVEMENT MARKER

I-155 N.B.					EACH
CL	4+00.00	TO	CL	8+50.00	12
CL	12+00.00	TO	CL	15+25.00	10
CL	17+78.00	TO	CL	20+50.00	8
I-155 S.B.					
LT	14+00.00	TO	LT	15+45.00	4
LT	18+64.00	TO	LT	20+00.00	4
RT	14+00.00	TO	RT	15+43.00	4
RT	18+50.00	TO	RT	20+00.00	4
				TOTAL	46

78200005 GUARDRAIL REFLECTORS, TYPE A

I-155 N.B.					EACH
LT	11+71.69	TO	LT	15+34.35	4
RT	12+86.98	TO	RT	15+69.67	4
I-155 S.B.					
RT	5+83.62	TO	RT	15+58.77	11
LT	9+25.63	TO	LT	15+66.16	7
RT	18+23.72	TO	RT	22+89.22	4
LT	18+40.18	TO	LT	22+57.35	4
				TOTAL	34

78200011 BARRIER WALL REFLECTORS, TYPE C

I-155 N.B.					EACH
LT	15+34.35	TO	LT	17+50.00	4
RT	15+69.67	TO	RT	17+75.00	4
I-155 S.B.					
RT	15+58.77	TO	RT	18+23.72	4
LT	15+66.16	TO	LT	18+40.18	4
				TOTAL	16

78300200 RAISED REFLECTIVE PAVEMENT MARKER REMOVAL

I-155 N.B.					EACH
CL	4+00.00	TO	CL	8+50.00	12
CL	12+00.00	TO	CL	15+25.00	10
CL	17+78.00	TO	CL	20+50.00	8
I-155 S.B.					
LT	14+00.00	TO	LT	15+45.00	4
LT	18+64.00	TO	LT	20+00.00	4
RT	14+00.00	TO	RT	15+43.00	4
RT	18+50.00	TO	RT	20+00.00	4
				TOTAL	46

78300201 PAVEMENT MARKING REMOVAL - GRINDING

I-155 N.B.						SQ FT
CL	4+00.00	TO	CL	8+50.00	STAGE I	50
LT	12+00.00	TO	LT	20+50.00	STAGE I	354
RT	12+00.00	TO	RT	20+50.00	STAGE II	354
					TOTAL	758

X2503000 MAINTENANCE MOWING

I-155 N.B.					ACRE
LT/RT	12+00.00	TO	LT/RT	20+50.00	2.4
I-155 S.B.					
LT/RT	14+00.00	TO	LT/RT	20+00.00	1.6
I-55 S.B.					
LT/RT	20+00.00	TO	LT/RT	28+00.00	1.2
NOTE: ASSUMES TWO (2) MOWINGS				TOTAL	5.2

X4421389 CLASS C PATCHES, TYPE II, 13 INCH (SPECIAL)

I-155 N.B.					SQ YD
LT/RT	12+00.00	TO	LT/RT	20+50.00	50
I-155 S.B.					
LT/RT	14+00.00	TO	LT/RT	20+00.00	50
				TOTAL	100

X4421394 CLASS C PATCHES, TYPE III, 13 INCH (SPECIAL)

I-155 N.B.					SQ YD
LT/RT	12+00.00	TO	LT/RT	20+50.00	50
I-155 S.B.					
LT/RT	14+00.00	TO	LT/RT	20+00.00	50
				TOTAL	100

X5010523 REMOVE CONCRETE END SECTION

I-155 N.B.					EACH
LT	15+28.98				1
I-155 S.B.					
LT	15+60.69				1
LT	18+43.09				1
				TOTAL	3

X6010003 PIPE DRAIN REMOVAL

I-155 N.B.					FOOT
LT	15+28.98				88
I-155 S.B.					
LT	15+60.69				49
LT	18+43.09				89
				TOTAL	226

MODEL: SCH-4 [Sheet]
FILE NAME: C:\SP\WHKS & COJobs-Spring - Projects\Civil Design\9490 D-6 On-Call\9490.03 I-55 155 Deck Replacements\CADD10.12\CADD Data\Sheets\D672220-SH1-Schedule.dgn

design firm no. 184001036 whks engineers + planners + land surveyors

USER NAME = gjameson	DESIGNED - BJJ	REVISED -	
	DRAWN - BJJ	REVISED -	
PLOT SCALE = 0.16666633 ' / in.	CHECKED - RKA	REVISED -	
PLOT DATE = 12/19/2024	DATE - 11/9/2023	REVISED -	

STATE OF ILLINOIS
DEPARTMENT OF TRANSPORTATION

SCHEDULE OF QUANTITIES
I-155 BRIDGE DECK REPLACEMENTS

SCALE: 1"=50' | SHEET 4 OF 4 SHEETS | STA. TO STA.

F.A.I. RTE.	SECTION	COUNTY	TOTAL SHEETS	SHEET NO.
155	(54-4HB)D	LOGAN	133	16

CONTRACT NO. 72220

ILLINOIS | FED. AID PROJECT

ALIGNMENT CONTROL								
NAD83/1997 ADJ - STATE PLANE WEST ZONE								
POINT TYPE	STATION	NORTHING	EASTING	RADIUS	LENGTH	DELTA / THETA	DIRECTION	TANGENT
ALIGMENT NAME: A004								
POT	385+00.000	1276844.895	2505837.629					
PI	424+30.477	1280773.927	2505731.073					
POT	452+88.820	1280825.55	2508588.949					
POT	465+56.276	1280848.637	2509856.195					
ALIGMENT NAME: ROADWAYB								
POT	1+15.000	1278220.642	2506259.202					
PC	2+75.000	1278374.828	2506301.944					
PI	10+68.620	1279139.607	2506513.946	2883.983	1548.903	30.772°	LEFT	793.62
PT	18+23.903	1279905.179	2506304.824					
POT	28+00.314	1280847.082	2506047.535					
ALIGMENT NAME: ROADWAYB1								
POT	28+00.190	1280843.92	2506035.959					
POT	47+91.940	1282765.284	2505511.144					
ALIGMENT NAME: ROADWAYC								
PC	0+00.000	1280869.791	2508588.155					
PI	28+90.640	1280817.872	2505697.981	2864.669	4525.665	90.517°	LEFT	2890.64
PT	45+25.665	1277928.284	2505775.982					
ALIGMENT NAME: RAMPD								
POT	0+00.000	1281130.963	2505628.873					
PC	6+20.600	1280513.472	2505690.922					
PI	18+87.710	1279252.712	2505817.609	881.63	1697.857	110.341°	LEFT	1267.11
PT	23+18.457	1279809.751	2506955.711					
POT	37+35.578	1280432.736	2508228.55					
ALIGMENT NAME: RAMPE								
POT	0+00.000	1280932.214	2508720.843					
PC	7+40.000	1280957.933	2507981.29					
PI	11+06.650	1280970.676	2507614.862	1434.366	717.927	28.678°	LEFT	366.65
PT	14+57.927	1280806.014	2507287.266					
PC	16+98.484	1280697.98	2507072.333					
PI	26+13.754	1280286.933	2506254.556	764.348	1337.628	100.269°	RIGHT	915.27
PT	30+36.112	1281164.889	2505995.879					
POT	40+85.238	1282171.243	2505699.372					
ALIGMENT NAME: ROADWAYF								
PC	0+00.000	1282727.344	2505404.754					
PI	4+13.640	1282327.786	2505511.766	3842.341	824.106	12.289°	RIGHT	413.64
PT	8+24.106	1281914.606	2505531.284					
POT	58+24.106	1276920.176	2505767.211					

HORIZONTAL CONTROL STATION - NAD83/1997						
POINT	DESCRIPTION	NORHTING	EASTING	STATION	OFFSET	CHAIN
1005	#5 REBAR W/CAP	1279486.289	2506361.727	13+99.69	24.61 LT	ROADWAYB
1006	#5 REBAR W/CAP	1279880.973	2506337.439	17+92.23	25.26 RT	ROADWAYB
9839	DISK SET IN CONCRETE	1280825.550	2508588.949	0+00.00	44.25 LT	ROADWAYC
1003	#5 REBAR W/CAP	1279864.897	2506479.274	24+12.58	14.39 LT	ROADWAYC
1004	#5 REBAR W/CAP	1279630.214	2506228.172	27+49.98	42.98 RT	ROADWAYC
1008	#5 REBAR W/CAP	1279800.371	2506217.041	15+53.07	6.84 LT	RAMPD
1009	#5 REBAR W/CAP	1279696.430	2506533.138	18+83.10	24.24 RT	RAMPD
9840	DISK SET IN CONCRETE	1276844.895	2505837.629	59+02.63	103.08 LT	ROADWAYF
9838	DISK SET IN CONCRETE	1280848.637	2509856.195	465+56.58	CL	A004

BENCHMARKS					
BENCHMARK	NAVD 88 DATUM	DESCRIPTION	STATION	OFFSET	CHAIN
BM FH-2	589.512	CHSLD '[]' ON SW APPROACH WALL TO NBL I-155 S# 054-0050	15+33.83	19.07 LT	ROADWAYB
BM TJM-1000	590.069	CUT '[]' ON N END OF NW APPROACH WALL TO NBL I-155 S# 054-0050	17+42.23	19.01 LT	ROADWAYB
BM TEA-38	569.664	CHSLD '[]' ON FOUNDATION TO S LEG OF EXIT 126 FOOD SIGN, 1025' NE OF S# 054-0050 & 054-0051 ON NW SIDE	15+73.15	61.89 RT	ROADWAYC
BM TEA-39	564.096	CHSLD '[]' ON SW CORNER OF CONC DROP BOX, 300' NE OF S# 054-0050 & 054-0051 ON NW SIDE OF SBL I-55	22+94.37	47.96 RT	ROADWAYC
BM TJM-1001	611.988	CUT '[]' ON W END OF NW APPROACH WALL TO S# 054-0051 ON I-155 SBL OFF RAMP / I-55 NBL ON RAMP	15+64.02	4.18 LT	RAMPD
BM TJM-1002	614.323	CUT '[]' ON E END OF SE APPROACH WALL TO S# 054-0051 ON I-155 SBL OFF RAMP / I-55 NBL ON RAMP	18+23.45	22.66 RT	RAMPD

REMOVAL PLAN

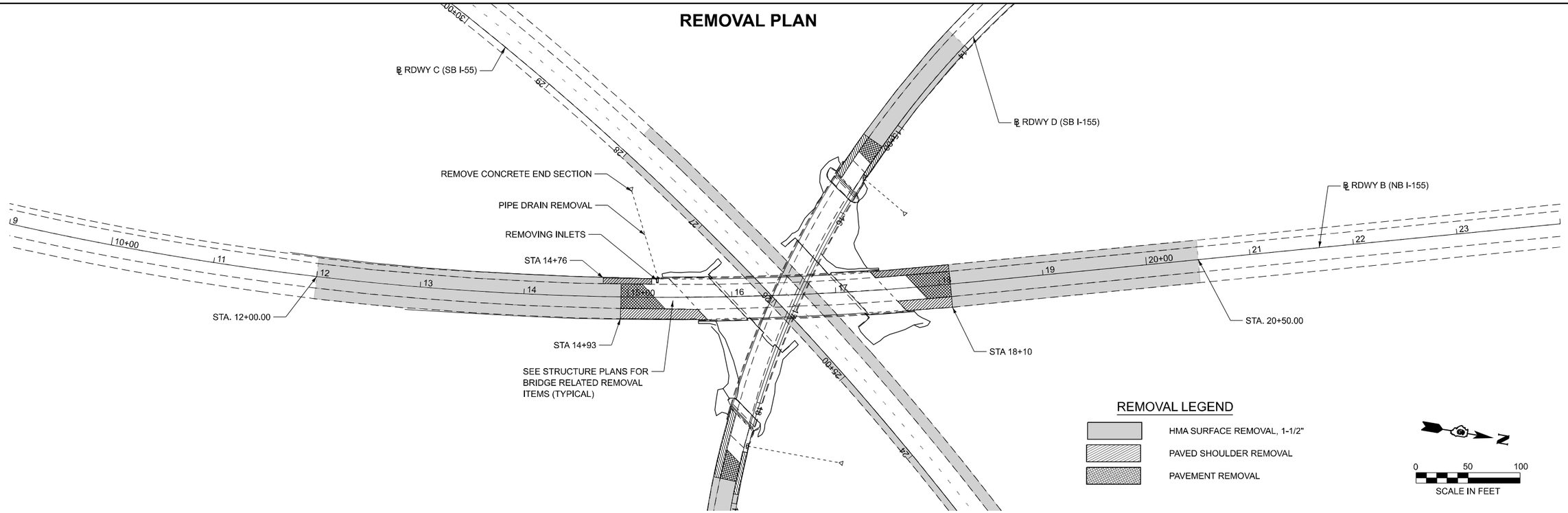

PROPOSED PLAN

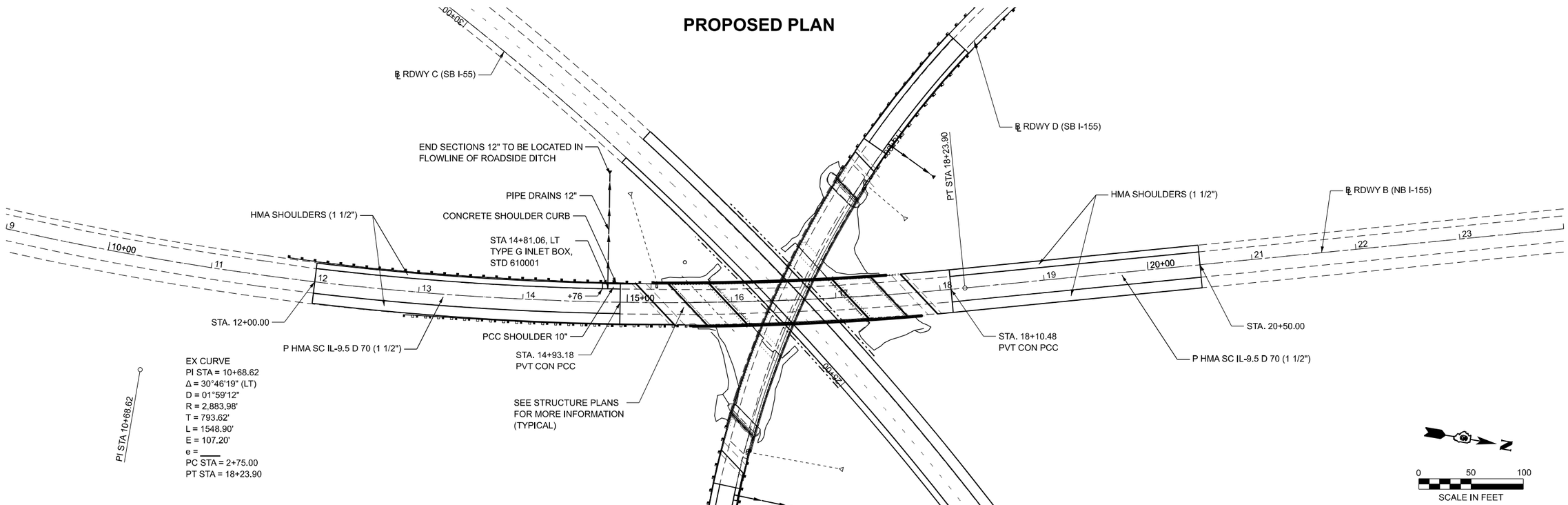

MODEL: ROADWAYB - Plan NB PROPOSED [Sheet]
FILE NAME: C:\SP\WHKS & CO\Jobs-Spring - Projects\Civil Design\9490 D-6 On-Call\9490.03 I-55 155 Deck Replacements\CADD10.12\CADD Data\Sheets\D672220-SHT-plan-ExPr_I-155NB_SN0540050.dgn

design firm no. 184001036 whks engineers + planners + land surveyors	USER NAME = bjohnson	DESIGNED - RKA	REVISED -	STATE OF ILLINOIS DEPARTMENT OF TRANSPORTATION	ROADWAY PLANS I-155 BRIDGE DECK REPLACEMENTS	F.A.I. RTE.	SECTION	COUNTY	TOTAL SHEETS	SHEET NO.
		DRAWN - GSJ	REVISED -			155	(54-4HB)D	LOGAN	133	18
	PLOT SCALE = 0.16666633 ' / in.	CHECKED - RKA	REVISED -					CONTRACT NO. 72220		
	PLOT DATE = 12/19/2024	DATE - 11/9/2023	REVISED -		SCALE: 1"=50' SHEET 1 OF 2 SHEETS STA. 9+00.00 TO STA. 24+00.00		ILLINOIS	FED. AID PROJECT		

REMOVAL PLAN

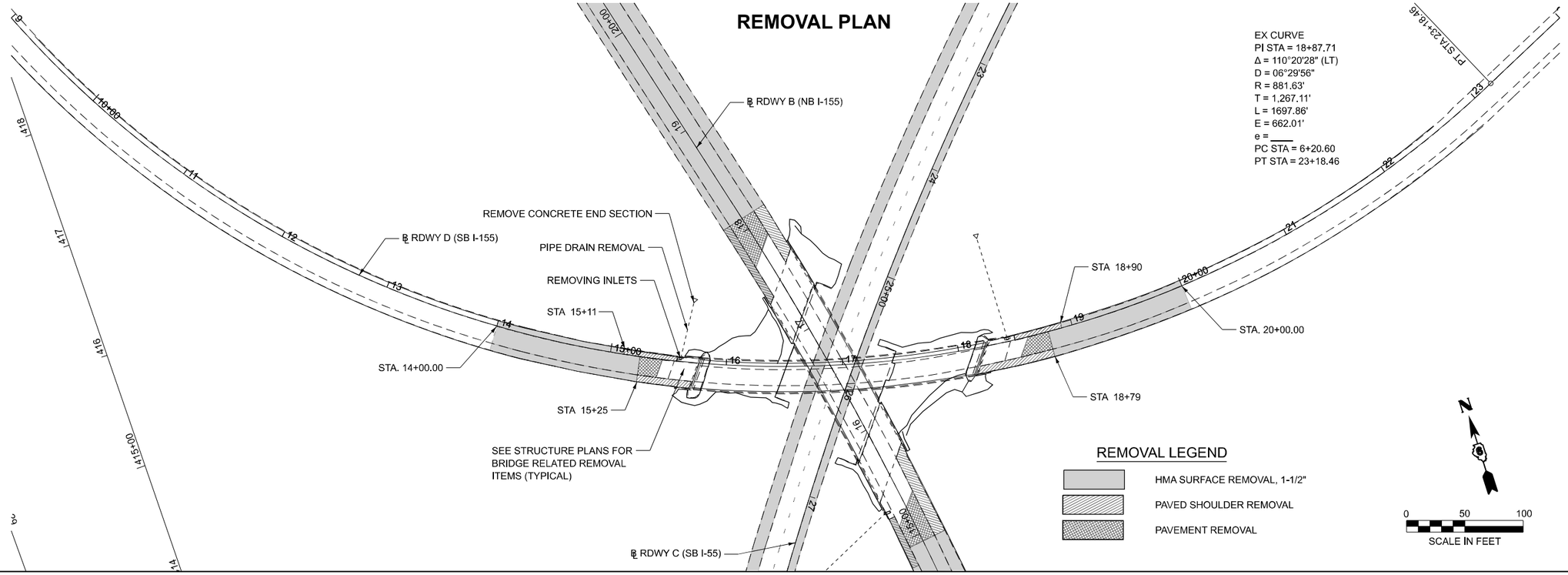

PROPOSED PLAN

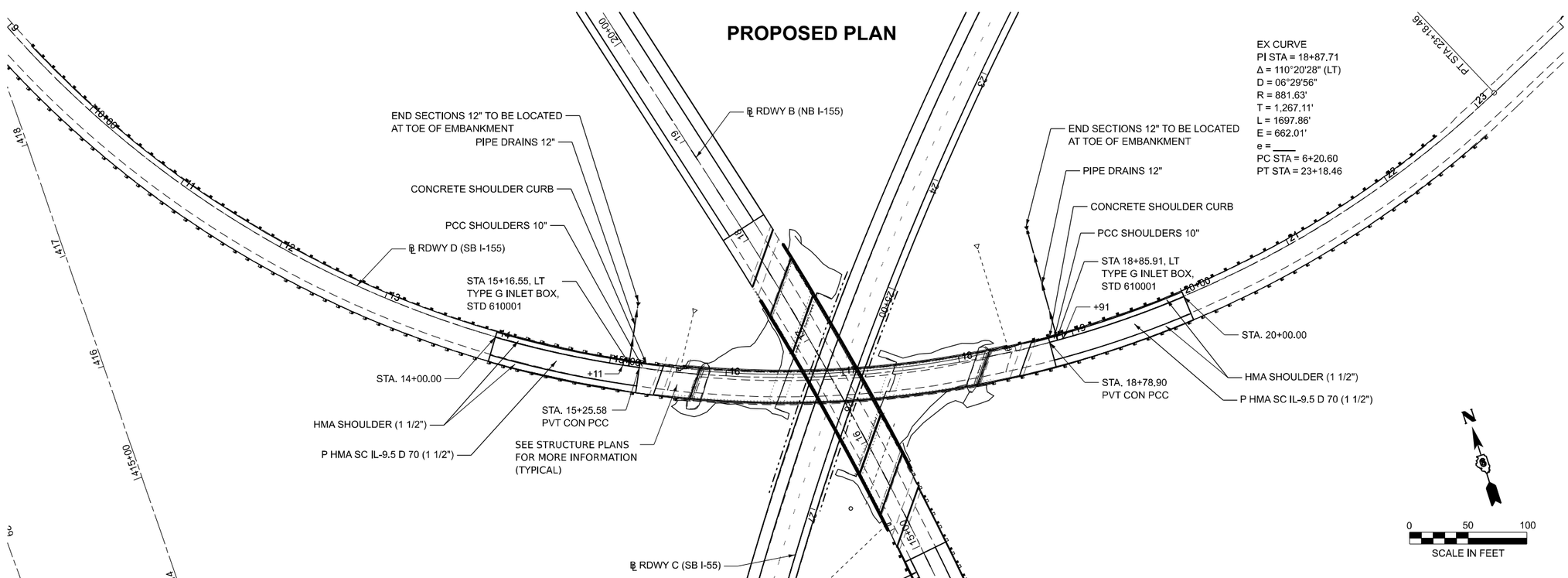

MODEL: RAMPD - Plan SB PROPOSED [Sheet]
FILE NAME: C:\SP\WHKS & COUjobs-Spring - Projects\Civil Design\9490 D4 On-Call\9490.03 I-55 I-155 Deck Replacements\CADD10.12\CADD Data\Sheets\D672220-SHT-plan-ExPr_I-155SB_SN0540051.dgn

design firm no. 184001036 whks engineers + planners + land surveyors	USER NAME = bjohnson	DESIGNED - RKA	REVISED -	STATE OF ILLINOIS DEPARTMENT OF TRANSPORTATION	ROADWAY PLANS I-155 BRIDGE DECK REPLACEMENTS
		DRAWN - GSJ	REVISED -		
	PLOT SCALE = 0.16666633 ' / in.	CHECKED - RKA	REVISED -		
	PLOT DATE = 12/19/2024	DATE - 11/9/2023	REVISED -		SCALE: 1"=50' SHEET 1 OF 2 SHEETS STA. 9+00.00 TO STA. 24+00.00

F.A.I. RTE.	SECTION	COUNTY	TOTAL SHEETS	SHEET NO.
155	(54-4HB)D	LOGAN	133	19
		CONTRACT NO. 72220		
		ILLINOIS	FED. AID PROJECT	

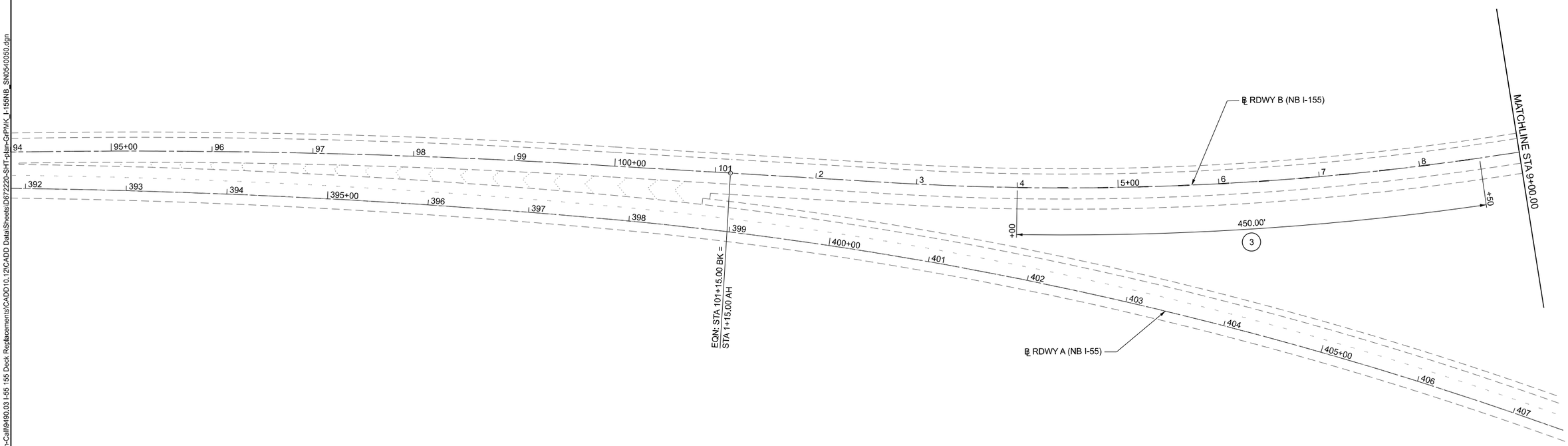

PMK LEGEND

1. SOLID LINE WHITE - MODIFIED URETHANE PAVEMENT MARKING - LINE 5"
2. SOLID LINE YELLOW - MODIFIED URETHANE PAVEMENT MARKING - LINE 5"
3. SKIP DASH WHITE (10 FT DASH; 30 FT GAP) - MODIFIED URETHANE PAVEMENT MARKING - LINE 5"

NOTE: RAISED REFLECTIVE PAVEMENT MARKERS PER HIGHWAY STANDARD 781001

GUARDRAIL LEGEND

- (A) STEEL PLATE BEAM GUARDRAIL, TYPE A, 6 FOOT POSTS
- (B) TRAFFIC BARRIER TERMINAL, TYPE 1 (SPECIAL) TANGENT
- (C) TRAFFIC BARRIER TERMINAL, TYPE 6
- (D) TRAFFIC BARRIER TERMINAL, TYPE 5
- (E) TRAFFIC BARRIER TERMINAL, TYPE 2

N

0 50 100 150
SCALE IN FEET

MODEL: I-155NB - Plan 1 [Sheet]
FILE NAME: C:\SPWHKS & CO\Jobs-Spring - Projects\Civil Design\9490 D-6 On-Call\9490.03 I-55 155 Deck Replacements\CADD10.12\CADD Data\Sheets\D672220-SHT-plan-GrPMK_I-155NB_SN0540050.dgn

design firm no. 184001036
whks
engineers + planners + land surveyors

USER NAME = bjohnson	DESIGNED - GSJ	REVISED -	
	DRAWN - GSJ	REVISED -	
PLOT SCALE = 0.16666633 ' / in.	CHECKED - RKA	REVISED -	
PLOT DATE = 12/19/2024	DATE - 11/9/2023	REVISED -	

STATE OF ILLINOIS
DEPARTMENT OF TRANSPORTATION

GUARDRAIL AND PAVEMENT MARKING PLAN
I-155 BRIDGE DECK REPLACEMENTS

SCALE: 1"=50' | SHEET 1 OF 4 SHEETS | STA. 94+00.00 TO STA. 9+00.00 R2

F.A.I. RTE.	SECTION	COUNTY	TOTAL SHEETS	SHEET NO.
155	(54-4HB)D	LOGAN	133	20

CONTRACT NO. 72220

ILLINOIS | FED. AID PROJECT

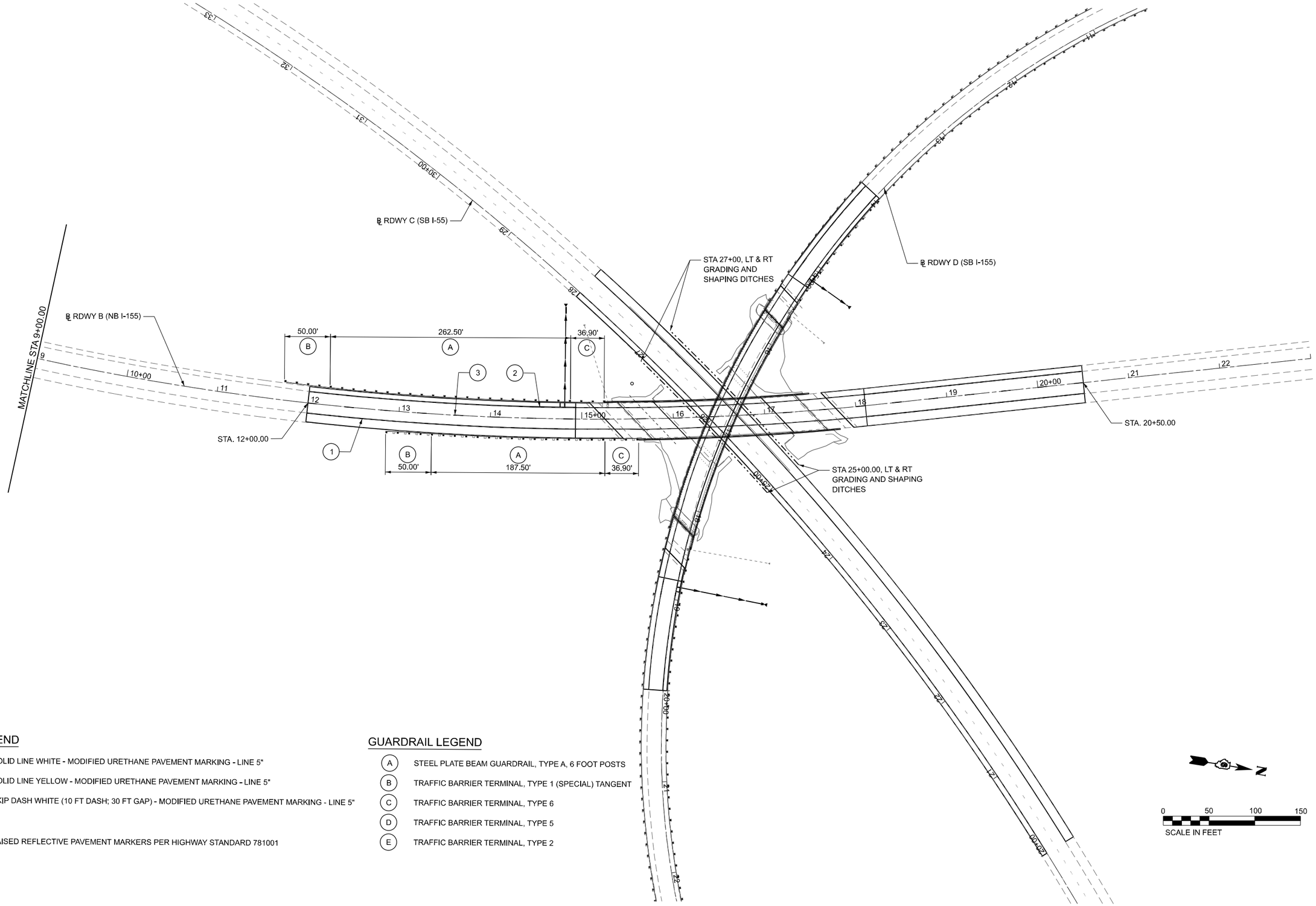

PMK LEGEND

1. SOLID LINE WHITE - MODIFIED URETHANE PAVEMENT MARKING - LINE 5"
2. SOLID LINE YELLOW - MODIFIED URETHANE PAVEMENT MARKING - LINE 5"
3. SKIP DASH WHITE (10 FT DASH; 30 FT GAP) - MODIFIED URETHANE PAVEMENT MARKING - LINE 5"

NOTE: RAISED REFLECTIVE PAVEMENT MARKERS PER HIGHWAY STANDARD 781001

GUARDRAIL LEGEND

- (A) STEEL PLATE BEAM GUARDRAIL, TYPE A, 6 FOOT POSTS
- (B) TRAFFIC BARRIER TERMINAL, TYPE 1 (SPECIAL) TANGENT
- (C) TRAFFIC BARRIER TERMINAL, TYPE 6
- (D) TRAFFIC BARRIER TERMINAL, TYPE 5
- (E) TRAFFIC BARRIER TERMINAL, TYPE 2

MODEL: I-155NB - Plan 2 [Sheet]
FILE NAME: C:\SPI\WHKS & CO\Jobs-Spring - Projects\Civil Design\9490 D4 On-Call\9490.03 I-55 155 Deck Replacements\CADD10.12\CADD Data\Sheets\D672220-SHT-plan-GrPMK_I-155NB_SN0540050.dgn

design firm no. 184001036 whks engineers • planners • land surveyors

USER NAME = gjameson	DESIGNED - GSJ	REVISED -	
	DRAWN - GSJ	REVISED -	
PLOT SCALE = 0.16666633 ' / in.	CHECKED - RKA	REVISED -	
PLOT DATE = 12/19/2024	DATE - 11/9/2023	REVISED -	

STATE OF ILLINOIS
DEPARTMENT OF TRANSPORTATION

GUARDRAIL AND PAVEMENT MARKING PLAN
I-155 BRIDGE DECK REPLACEMENTS

SCALE: 1"=50' | SHEET 2 OF 4 SHEETS | STA. 9+00.00 R2 TO STA. 23+00.00 R2

F.A.I. RTE.	SECTION	COUNTY	TOTAL SHEETS	SHEET NO.
155	(54-4HB)D	LOGAN	133	21
		CONTRACT NO. 72220		
	ILLINOIS	FED. AID PROJECT		

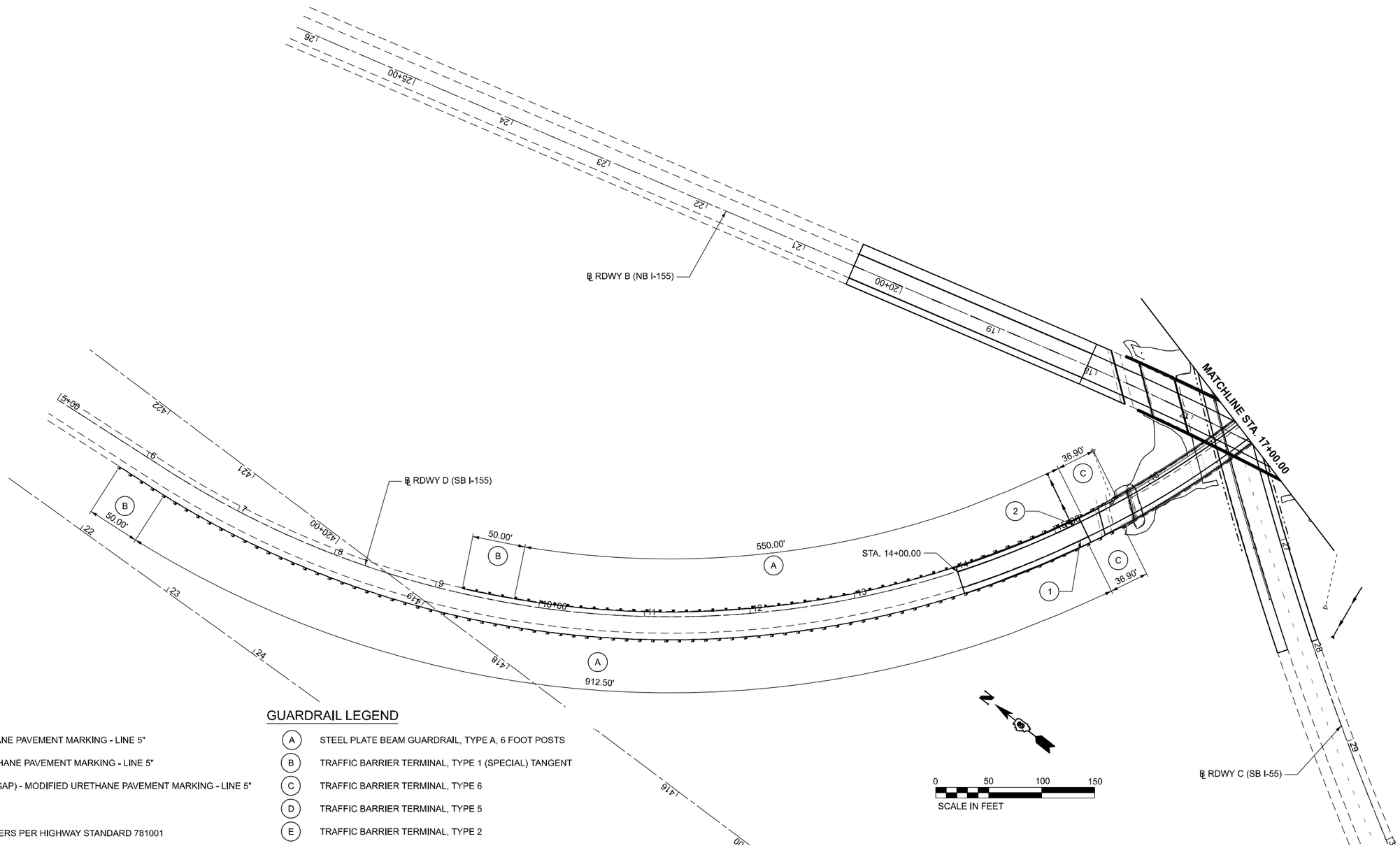

PMK LEGEND

1. SOLID LINE WHITE - MODIFIED URETHANE PAVEMENT MARKING - LINE 5"
2. SOLID LINE YELLOW - MODIFIED URETHANE PAVEMENT MARKING - LINE 5"
3. SKIP DASH WHITE (10 FT DASH; 30 FT GAP) - MODIFIED URETHANE PAVEMENT MARKING - LINE 5"

NOTE: RAISED REFLECTIVE PAVEMENT MARKERS PER HIGHWAY STANDARD 781001

GUARDRAIL LEGEND

- (A) STEEL PLATE BEAM GUARDRAIL, TYPE A, 6 FOOT POSTS
- (B) TRAFFIC BARRIER TERMINAL, TYPE 1 (SPECIAL) TANGENT
- (C) TRAFFIC BARRIER TERMINAL, TYPE 6
- (D) TRAFFIC BARRIER TERMINAL, TYPE 5
- (E) TRAFFIC BARRIER TERMINAL, TYPE 2

MODEL: RAMPD - Plan 1 [Sheet]
FILE NAME: C:\SP\WHKS & CO\Jobs-Spring - Projects\Civil Design\9490 D-6 On-Call\9490.03 I-55 155 Deck Replacements\CADD10.12\CADD Data\Sheets\D672220-SHT-plan-GrPMK_I-155SB_SN0540051.dgn

design firm no. 184001036
whks
engineers + planners + land surveyors

USER NAME = gjameson	DESIGNED - GSJ	REVISED -	
	DRAWN - GSJ	REVISED -	
PLOT SCALE = 0.16666633 ' / in.	CHECKED - RKA	REVISED -	
PLOT DATE = 12/19/2024	DATE - 11/9/2023	REVISED -	

STATE OF ILLINOIS
DEPARTMENT OF TRANSPORTATION

GUARDRAIL AND PAVEMENT MARKING PLAN
I-155 BRIDGE DECK REPLACEMENTS

SCALE: 1"=50' | SHEET 3 OF 4 SHEETS | STA. 5+00.00 TO STA. 17+00.00

F.A.I. RTE.	SECTION	COUNTY	TOTAL SHEETS	SHEET NO.
155	(54-4HB)D	LOGAN	133	22
		CONTRACT NO. 72220		
		ILLINOIS FED. AID PROJECT		

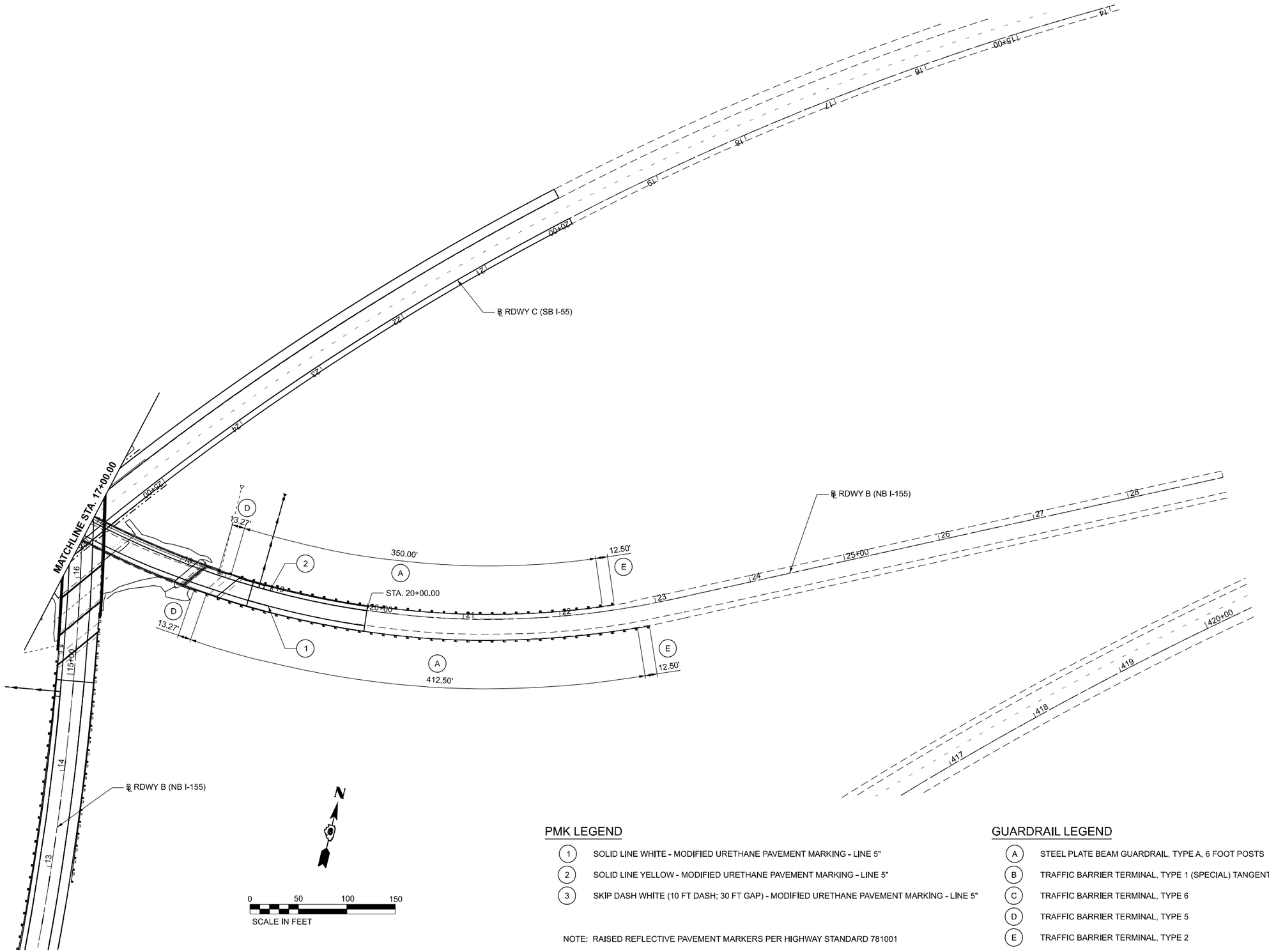

PMK LEGEND

1. SOLID LINE WHITE - MODIFIED URETHANE PAVEMENT MARKING - LINE 5"
2. SOLID LINE YELLOW - MODIFIED URETHANE PAVEMENT MARKING - LINE 5"
3. SKIP DASH WHITE (10 FT DASH; 30 FT GAP) - MODIFIED URETHANE PAVEMENT MARKING - LINE 5"

NOTE: RAISED REFLECTIVE PAVEMENT MARKERS PER HIGHWAY STANDARD 781001

GUARDRAIL LEGEND

- (A) STEEL PLATE BEAM GUARDRAIL, TYPE A, 6 FOOT POSTS
- (B) TRAFFIC BARRIER TERMINAL, TYPE 1 (SPECIAL) TANGENT
- (C) TRAFFIC BARRIER TERMINAL, TYPE 6
- (D) TRAFFIC BARRIER TERMINAL, TYPE 5
- (E) TRAFFIC BARRIER TERMINAL, TYPE 2

MODEL: RAMPD - Plan 2 [Sheet]
FILE NAME: C:\SP\WHKS & CO\Jobs-Spring - Projects\Civil Design\9490 D4 On-Call\9490.03 I-55 155 Deck Replacements\CADD10.12\CADD Data\Sheets\D672220-SHT-plan-GrPMK_I-155SB_SN0540051.dgn

design firm no. 184001036
whks
engineers + planners + land surveyors

USER NAME = bjohnson	DESIGNED - GSJ	REVISED -	
	DRAWN - GSJ	REVISED -	
PLOT SCALE = 0.16666633 ' / in.	CHECKED - RKA	REVISED -	
PLOT DATE = 12/19/2024	DATE - 11/9/2023	REVISED -	

STATE OF ILLINOIS
DEPARTMENT OF TRANSPORTATION

GUARDRAIL AND PAVEMENT MARKING PLAN
I-155 BRIDGE DECK REPLACEMENTS

SCALE: 1"=50' | SHEET 4 OF 4 SHEETS | STA. 17+00.00 TO STA. 29+00.00

F.A.I. RTE.	SECTION	COUNTY	TOTAL SHEETS	SHEET NO.
155	(54-4HB)D	LOGAN	133	23

CONTRACT NO. 72220

ILLINOIS | FED. AID PROJECT

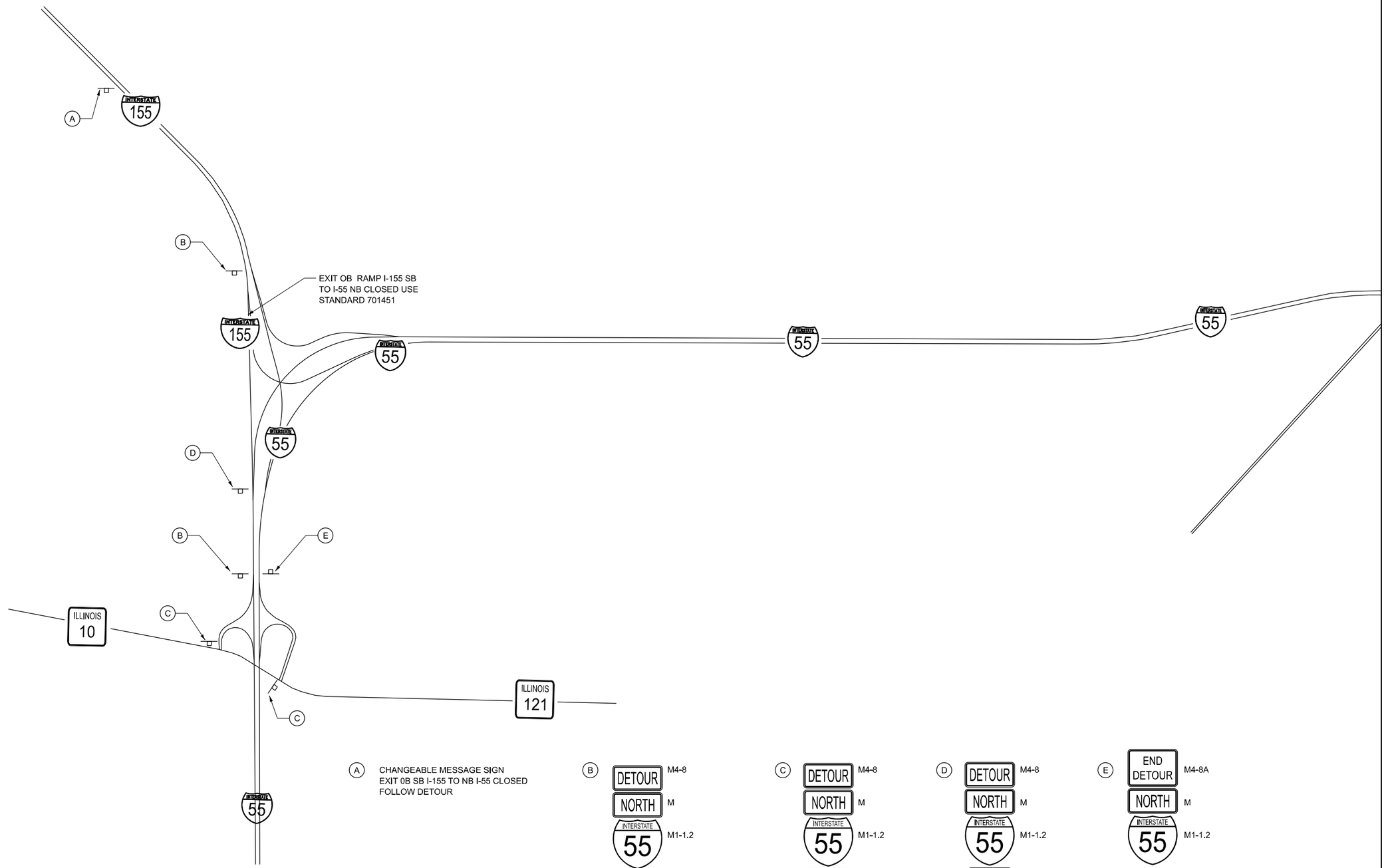

A CHANGEABLE MESSAGE SIGN
EXIT 0B SB I-155 TO NB I-55 CLOSED
FOLLOW DETOUR

B DETOUR M4-8
NORTH M
INTERSTATE 55 M1-1.2
M6-2

C DETOUR M4-8
NORTH M
INTERSTATE 55 M1-1.2
M6-1

D DETOUR M4-8
NORTH M
INTERSTATE 55 M1-1.2
M6-3

E END DETOUR M4-8A
NORTH M
INTERSTATE 55 M1-1.2

DETOUR A DETAILS
I-155 SB TO I-55 NB

N

MODEL: DetourA [Sheet]
FILE NAME: C:\SP\WHKS & CO\Jobs-Spring - Projects\Civil Design\9490 D-6 On-Call\9490.03 I-55 155 Deck Replacements\CADD10.12\CADD Data\Sheets\D672220-SHT-staging_DetourA_I-155SB.dgn

design firm no. 184001036 whks engineers + planners + land surveyors

USER NAME = gjameson	DESIGNED - GSJ	REVISED -	
	DRAWN - GSJ	REVISED -	
PLOT SCALE = 0.16666633 ' / in.	CHECKED - RKA	REVISED -	
PLOT DATE = 12/19/2024	DATE - 11/9/2023	REVISED -	

STATE OF ILLINOIS
DEPARTMENT OF TRANSPORTATION

ROAD CLOSURE PLAN
I-155 BRIDGE DECK REPLACEMENTS

SCALE: 1"=50' | SHEET 1 OF 2 SHEETS | STA. | TO STA.

F.A.I. RTE.	SECTION	COUNTY	TOTAL SHEETS	SHEET NO.
155	(54-4HB)D	LOGAN	133	24

CONTRACT NO. 72220

ILLINOIS | FED. AID PROJECT

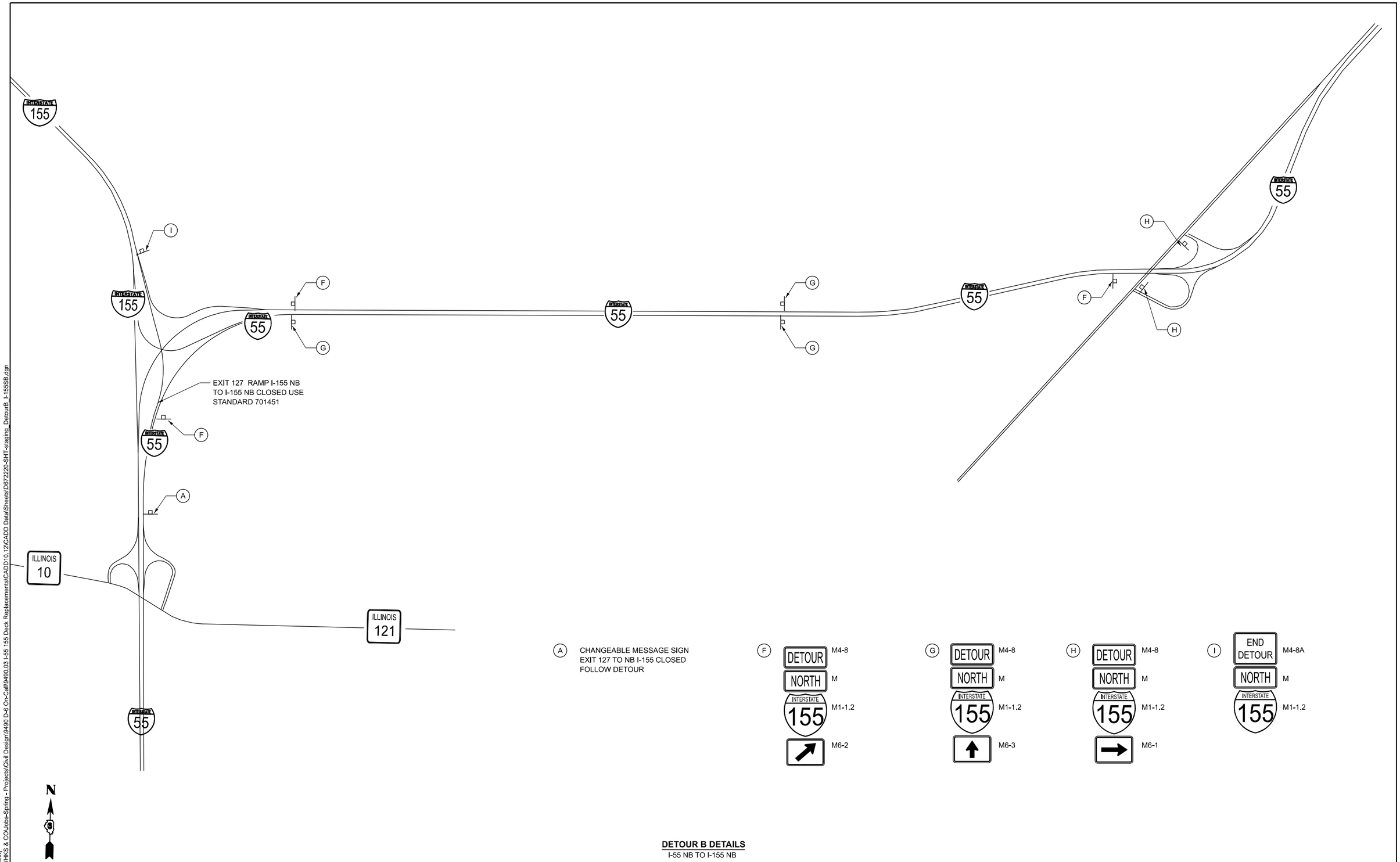

A CHANGEABLE MESSAGE SIGN
EXIT 127 TO NB I-155 CLOSED
FOLLOW DETOUR

F
DETOUR M4-8
NORTH M
INTERSTATE 155 M1-1.2
M6-2

G
DETOUR M4-8
NORTH M
INTERSTATE 155 M1-1.2
M6-3

H
DETOUR M4-8
NORTH M
INTERSTATE 155 M1-1.2
M6-1

I
END DETOUR M4-8A
NORTH M
INTERSTATE 155 M1-1.2

DETOUR B DETAILS
I-55 NB TO I-155 NB

MODEL: DetourB [Sheet]
FILE NAME: C:\SP\WHKS & CO\Jobs-Spring - Projects\Civil Design\9490 D-6 On-Call\9490.03 I-55 155 Deck Replacements\CADD10.12\CADD Data\Sheets\D672220-SHT-staging_DetourB_I-155SB.dgn

design firm no. 184001036
whks
engineers + planners + land surveyors

USER NAME = gjameson	DESIGNED - GSJ	REVISED -	
	DRAWN - GSJ	REVISED -	
PLOT SCALE = 0.16666633 ' / in.	CHECKED - RKA	REVISED -	
PLOT DATE = 12/19/2024	DATE - 11/9/2023	REVISED -	

STATE OF ILLINOIS
DEPARTMENT OF TRANSPORTATION

ROAD CLOSURE PLAN
I-155 BRIDGE DECK REPLACEMENTS

SCALE: 1"=50' | SHEET 2 OF 2 SHEETS | STA. | TO STA.

F.A.I. RTE.	SECTION	COUNTY	TOTAL SHEETS	SHEET NO.
155	(54-4HB)D	LOGAN	133	25

CONTRACT NO. 72220

ILLINOIS | FED. AID PROJECT

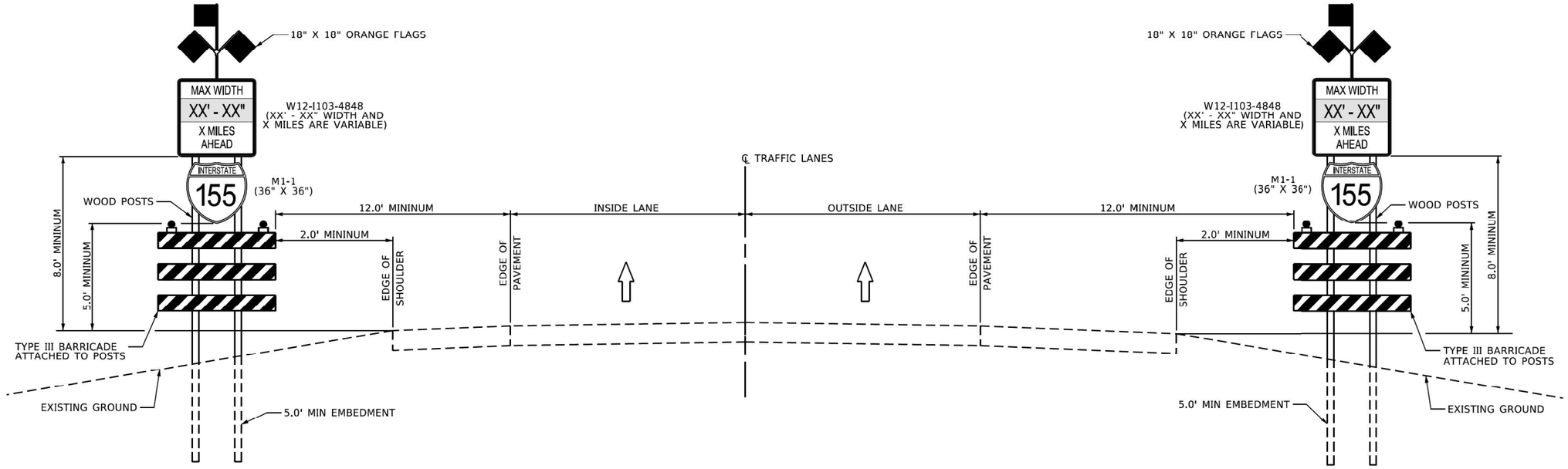

WIDTH RESTRICTION SIGN
INTERSTATE AND EXPRESSWAYS
MAINLINE PAVEMENT

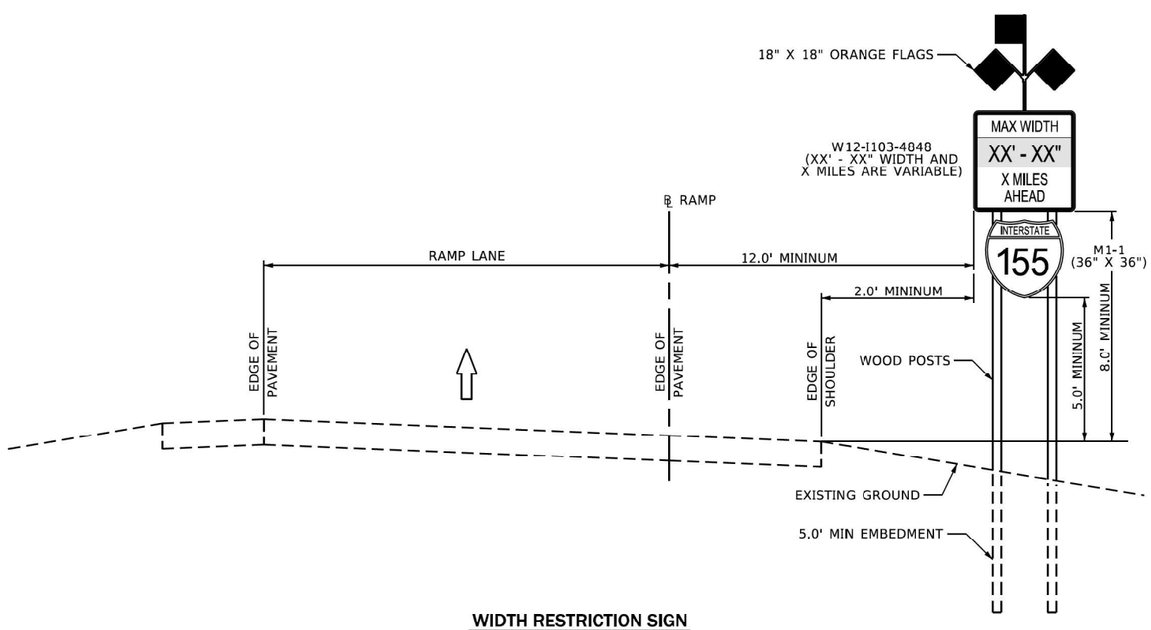

WIDTH RESTRICTION SIGN
INTERSTATE AND EXPRESSWAYS
RAMP PAVEMENT

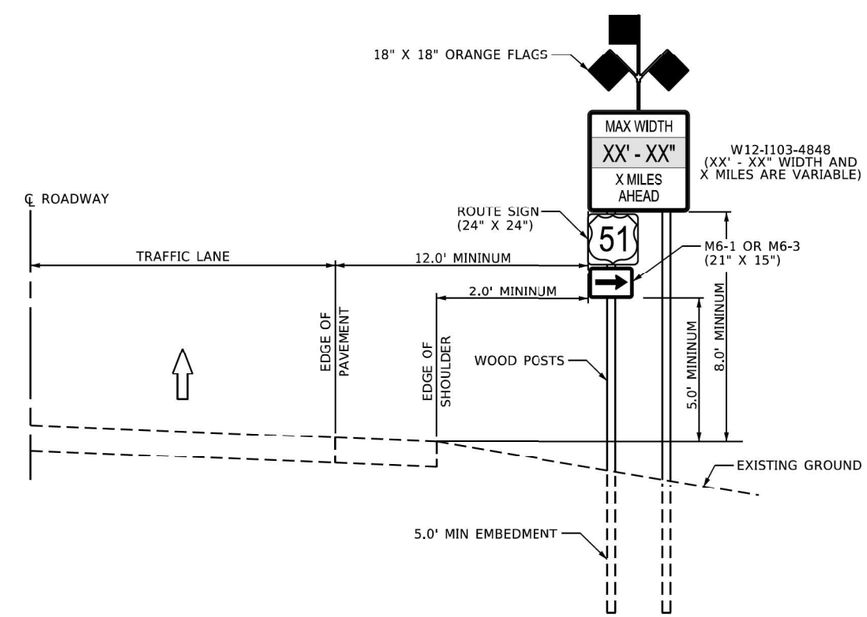

WIDTH RESTRICTION SIGN
CONVENTIONAL ROADWAYS

MODEL: GEN-1 [Sheet]
FILE NAME: C:\SP\WHKS & CO\Jobs-Spring - Projects\Civil Design\9490 D-6 On-Call\9490.03 I-55 155 Deck Replacements\CADD10.12\CADD Data\Sheets\D672220-SHT-staging_WidthRestriction.dgn

design firm no. 184001036
whks
engineers + planners + land surveyors

USER NAME = gjameson	DESIGNED - RKA	REVISED -	
	DRAWN - GSJ	REVISED -	
PLOT SCALE = 0.16666633 ' / in.	CHECKED - RKA	REVISED -	
PLOT DATE = 12/19/2024	DATE - 11/9/2023	REVISED -	

STATE OF ILLINOIS
DEPARTMENT OF TRANSPORTATION

WIDTH RESTRICTION SIGNING
I-155 BRIDGE DECK REPLACEMENTS

SCALE: 1"=50' | SHEET 1 OF 2 SHEETS | STA. | TO STA.

F.A.I. RTE.	SECTION	COUNTY	TOTAL SHEETS	SHEET NO.
155	(54-4HB)D	LOGAN	133	26
		CONTRACT NO. 72220		
	ILLINOIS	FED. AID PROJECT		

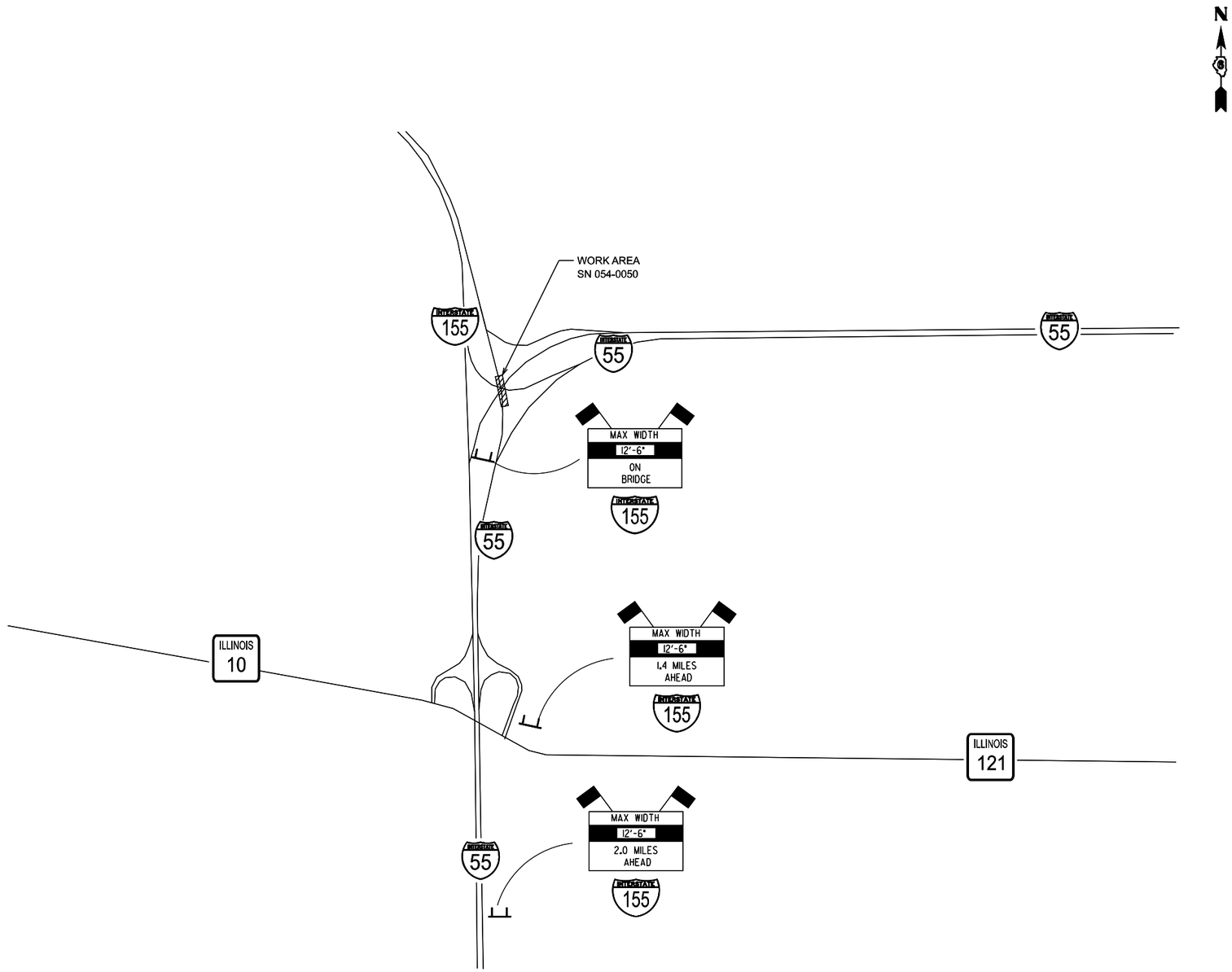

MODEL: GEN-2 [Sheet]
FILE NAME: C:\SP\WHKS & CO\Jobs-Spring - Projects\Civil Design\9490 D-6 On-Call\9490.03 I-55 155 Deck Replacements\CADD10.12\CADD Data\Sheets\D672220-SHT-staging_WidthRestriction.dgn

design firm no. 184001036
whks
engineers + planners + land surveyors

USER NAME = bjohnson	DESIGNED - RKA	REVISED -	
	DRAWN - GSJ	REVISED -	
PLOT SCALE = 0.16666633 ' / in.	CHECKED - RKA	REVISED -	
PLOT DATE = 12/19/2024	DATE - 11/9/2023	REVISED -	

STATE OF ILLINOIS
DEPARTMENT OF TRANSPORTATION

WIDTH RESTRICTION SIGNING
I-155 BRIDGE DECK REPLACEMENTS

SCALE: 1"=50' | SHEET 2 OF 2 SHEETS | STA. TO STA.

F.A.I. RTE.	SECTION	COUNTY	TOTAL SHEETS	SHEET NO.
155	(54-4HB)D	LOGAN	133	27
		CONTRACT NO. 72220		
		ILLINOIS	FED. AID PROJECT	

TRAFFIC CONTROL GENERAL NOTES

H BEFORE BEGINNING ANY WORK, THE CONTRACTOR SHALL RETAIN AND RECORD FOR FUTURE REFERENCE, ALL EXISTING PAVEMENT MARKING LINES (RAISED REFLECTIVE PAVEMENT MARKERS) IN ORDER THAT THESE LOCATIONS CAN BE RE-ESTABLISHED FOR STRIPING. EXACT LOCATIONS OF ALL PAVEMENT MARKINGS SHALL BE AS DIRECTED BY THE ENGINEER. THE COST OF THIS WORK SHALL BE INCLUDED IN THE COST OF THE RELATED PAVEMENT MARKING PAY ITEMS.

1. EXISTING RAISED REFLECTIVE PAVEMENT MARKER REFLECTORS THAT CONFLICT WITH THE REVISED TRAFFIC PATTERN SHALL BE REM0VED FROM THE EXISTING CASTINGS LOCATED IN THE PAVEMENT. THIS WORK WILL BE PAID FOR AT THE CONTRACT UNIT PRICE EACH FOR RAISED REFLECTIVE PAVEMENT MARKER REMOVAL.

2. THE CONTRACTOR SHALL REMOVE ALL PAVEMENT MARKINGS THAT CONFLICT WITH THE FOLLOWING STAGE OR THE FINAL PAVEMENT MARKING. THIS WORK WILL BE PAID FOR AT THE CONTRACT UNIT PRICE PER SQUARE FOOT FOR PAVEMENT MARKING REMOVAL - GRINDING.

3. ALL TRAFFIC CONTROL DEVICES SHALL BE REFLECTORIZED PRIOR TO INSTALLATION AND CLEANED AS SPECIFIED IN THE TRAFFIC CONTROL SPECIAL PROVISIONS OR AS DIRECTED BY THE ENGINEER.

4. ALL DRUMS, VERTICAL PANELS, AND BARRICADES ADJACENT TO THE EDGE OF THE TRAVELED WAY SHALL BE EQUIPPED WITH MONO-DIRECTIONAL STEADY BURNING LIGHTS.

5. FOR STABILIZATION, ALL TYPE III BARRICADES SHALL REQUIRE A MINIMUM OF FOUR SAND BAGS PER BARRICADE.

6. A CHANGEABLE MESSAGE SIGN SHALL BE INSTALLED ALONG INTERSTATE 55, IN ADVANCE OF THE INTERSTATE 155 INTERCHANGE, FOR EACH DIRECTION OF TRAVEL, AT A LOCATION DETERMINED BY THE ENGINEER PRIOR TO THE START OF CONSTRUCTION FOR THE DURATION OF THE CONTRACT.

7. SEE STRUCTURAL PLANS FOR ADDITIONAL BRIDGE STAGING INFORMATION.

8. THE CONTRACTOR SHALL CONTACT THE DISTRICT 6 TRAFFIC CONTROL SECTION OF THE BUREAU OF OPERATIONS AT (217) 785-5306 AT LEAST 21 DAYS PRIOR TO IMPLEMENTING ANY LANE CLOSURES, 48 HOURS PRIOR TO A SWITCH IN TRAFFIC STAGING, AND 21 DAYS PRIOR TO CLOSING A RAMP.

MAINTENANCE OF TRAFFIC

STAGE I
INSTALL TRAFFIC CONTROL FOR STAGE I AND SHIFT TRAFFIC AS SHOWN WITH THE APPLICABLE PORTIONS OF THE HIGHWAY STANDARDS USED.

HIGHWAY STANDARDS USED:
-701400 -701428
-701402 SPECIAL

TRAFFIC CONTROL DETAILS (SIGN, PAVEMENT MARKINGS, ETC.) NOT SHOWN IN THESE STAGE CONSTRUCTION DETAILS SHALL BE AS PER THE HIGHWAY STANDARDS LISTED ABOVE.

STAGE II
RELOCATE TRAFFIC CONTROL FOR STAGE II AND SHIFT TRAFFIC AS SHOWN WITH THE APPLICABLE PORTIONS OF THE HIGHWAY STANDARDS USED.

HIGHWAY STANDARDS USED:
-701400 -701428
-701402 SPECIAL
HIGHWAY STANDARDS USED:
TRAFFIC CONTROL DETAILS (SIGN, PAVEMENT MARKINGS, ETC.) NOT SHOWN IN THESE STAGE CONSTRUCTION DETAILS SHALL BE AS PER THE HIGHWAY STANDARDS LISTED ABOVE.

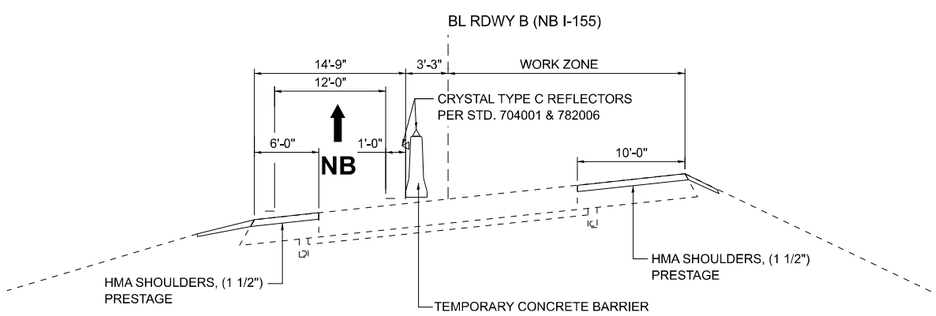

MAINTENANCE OF TRAFFIC - STAGE I

(LOOKING NORTH)

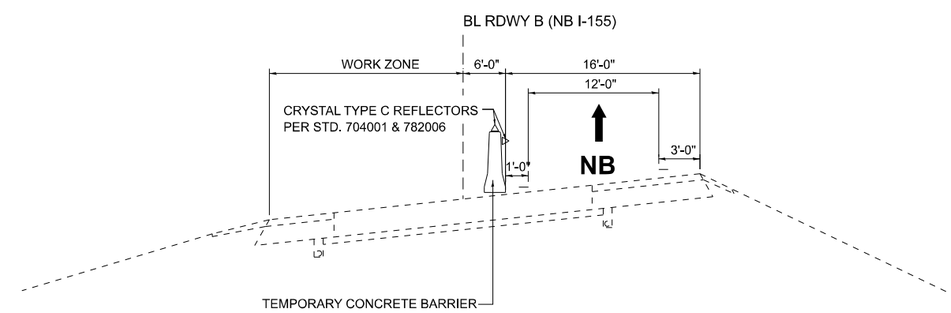

MAINTENANCE OF TRAFFIC - STAGE II

(LOOKING NORTH)

MODEL: GEN-1 [Sheet]
FILE NAME: C:\SP\WHKS & CO\Jobs-Spring - Projects\Civil Design\9490 D-6 On-Call\9490.03 I-55 155 Deck Replacements\CADD10.12\CADD Data\Sheets\D672220-SHT-gennote-Staging.dgn

design firm no. 184001036 whks engineers + planners + land surveyors

USER NAME = bjohnson	DESIGNED - GSJ	REVISED -	
	DRAWN - GSJ	REVISED -	
PLOT SCALE = 0.16666633 ' / in.	CHECKED - RKA	REVISED -	
PLOT DATE = 12/19/2024	DATE - 1/9/2023	REVISED -	

STATE OF ILLINOIS
DEPARTMENT OF TRANSPORTATION

TRAFFIC CONTROL GENERAL NOTES
I-155 BRIDGE DECK REPLACEMENTS

SCALE: 1"=50' | SHEET 1 OF 1 SHEETS | STA. TO STA.

F.A.I. RTE.	SECTION	COUNTY	TOTAL SHEETS	SHEET NO.
155	(54-4HB)D	LOGAN	133	28
		CONTRACT NO. 72220		
	ILLINOIS	FED. AID PROJECT		

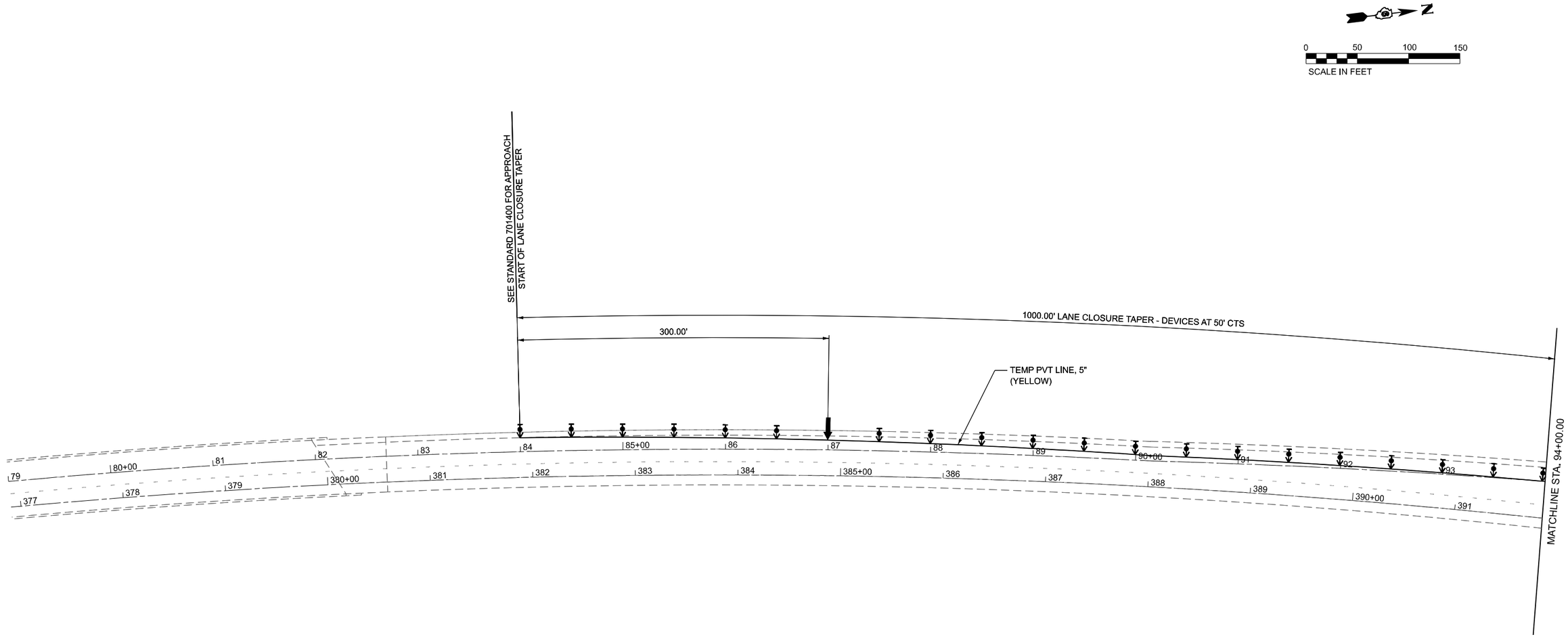

SYMBOLS

- ARROW BOARD
- WORK AREA
- SIGN
- DIRECTION INDICATOR BARRICADE WITH STEADY BURN MONODIRECTIONAL LIGHT
- TYPE II BARRICADE, DRUM, OR VERTICAL BARRICADE WITH STEADY BURN MONODIRECTIONAL LIGHT
- TEMPORARY CONCRETE BARRIER WITH TYPE C REFLECTORS
- IMPACT ATTENUATOR

NOTE:
TEMPORARY PAVEMENT MARKING PLACEMENT AND REMOVAL SHALL NOT BE PAID FOR SEPERATELY BUT SHALL BE INCLUDED IN THE COST OF TRAFFIC CONTROL AND PROTECTION, STANDARDS 701401 AND 701402 (SPECIAL).

MODEL: I-155NB - Plan 0 [Sheet]
FILE NAME: C:\SP\WHKS & CO\Jobs-Spring - Projects\Civil Design\9490 D-6 On-Call\9490.03 I-55 155 Deck Replacements\CADD10.12\CADD Data\Sheets\D672220-SHT-staging1_I-155NB_SN0540050.dgn

design firm no. 184001036
whks
engineers + planners + land surveyors

USER NAME = gjameson	DESIGNED - GSJ	REVISED -	
	DRAWN - GSJ	REVISED -	
PLOT SCALE = 0.16666633 ' / in.	CHECKED - RKA	REVISED -	
PLOT DATE = 12/19/2024	DATE - 11/9/2023	REVISED -	

STATE OF ILLINOIS
DEPARTMENT OF TRANSPORTATION

MAINTENANCE OF TRAFFIC - STAGE 1
I-155 BRIDGE DECK REPLACEMENTS

SCALE: 1"=50' | SHEET 1 OF 6 SHEETS | STA. 79+00.00 TO STA. 94+00.00

F.A.I. RTE.	SECTION	COUNTY	TOTAL SHEETS	SHEET NO.
155	(54-4HB)D	LOGAN	133	29
		CONTRACT NO. 72220		
		ILLINOIS	FED. AID PROJECT	

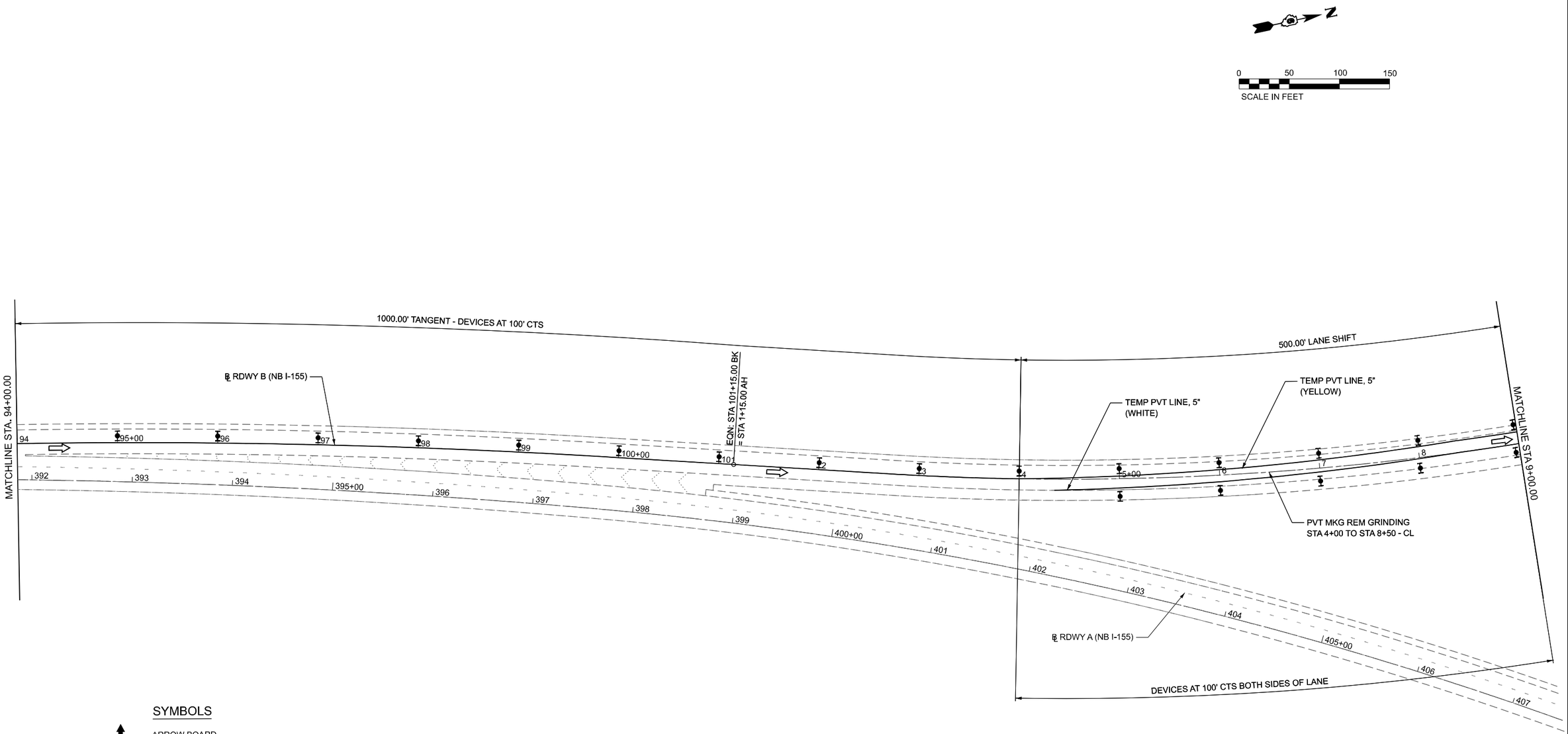

SYMBOLS

- ARROW BOARD
- WORK AREA
- SIGN
- DIRECTION INDICATOR BARRICADE WITH STEADY BURN MONODIRECTIONAL LIGHT
- TYPE II BARRICADE, DRUM, OR VERTICAL BARRICADE WITH STEADY BURN MONODIRECTIONAL LIGHT
- TEMPORARY CONCRETE BARRIER WITH TYPE C REFLECTORS
- IMPACT ATTENUATOR

NOTE:
TEMPORARY PAVEMENT MARKING PLACEMENT AND REMOVAL SHALL NOT BE PAID FOR SEPERATELY BUT SHALL BE INCLUDED IN THE COST OF TRAFFIC CONTROL AND PROTECTION, STANDARDS 701401 AND 701402 (SPECIAL).

MODEL: I-155NB - Plan 1 [Sheet]
FILE NAME: C:\SP\WHKS & COUobs-Spring - Projects\Civil Design\9490 D-6 On-Call\9490.03 I-55 155 Deck Replacements\CADD10.12\CADD Data\Sheets\D672220-SHT-staging1_I-155NB_SN0540050.dgn

design firm no. 184001036
whks
engineers + planners + land surveyors

USER NAME = gjameson	DESIGNED - GSJ	REVISED -	
	DRAWN - GSJ	REVISED -	
PLOT SCALE = 0.16666633 ' / in.	CHECKED - RKA	REVISED -	
PLOT DATE = 12/19/2024	DATE - 11/9/2023	REVISED -	

STATE OF ILLINOIS
DEPARTMENT OF TRANSPORTATION

MAINTENANCE OF TRAFFIC - STAGE 1
I-155 BRIDGE DECK REPLACEMENTS

SCALE: 1"=50' | SHEET 2 OF 6 SHEETS | STA. 94+00.00 TO STA. 9+00.00 R2

F.A.I. RTE.	SECTION	COUNTY	TOTAL SHEETS	SHEET NO.
155	(54-4HB)D	LOGAN	133	30

CONTRACT NO. 72220

ILLINOIS | FED. AID PROJECT

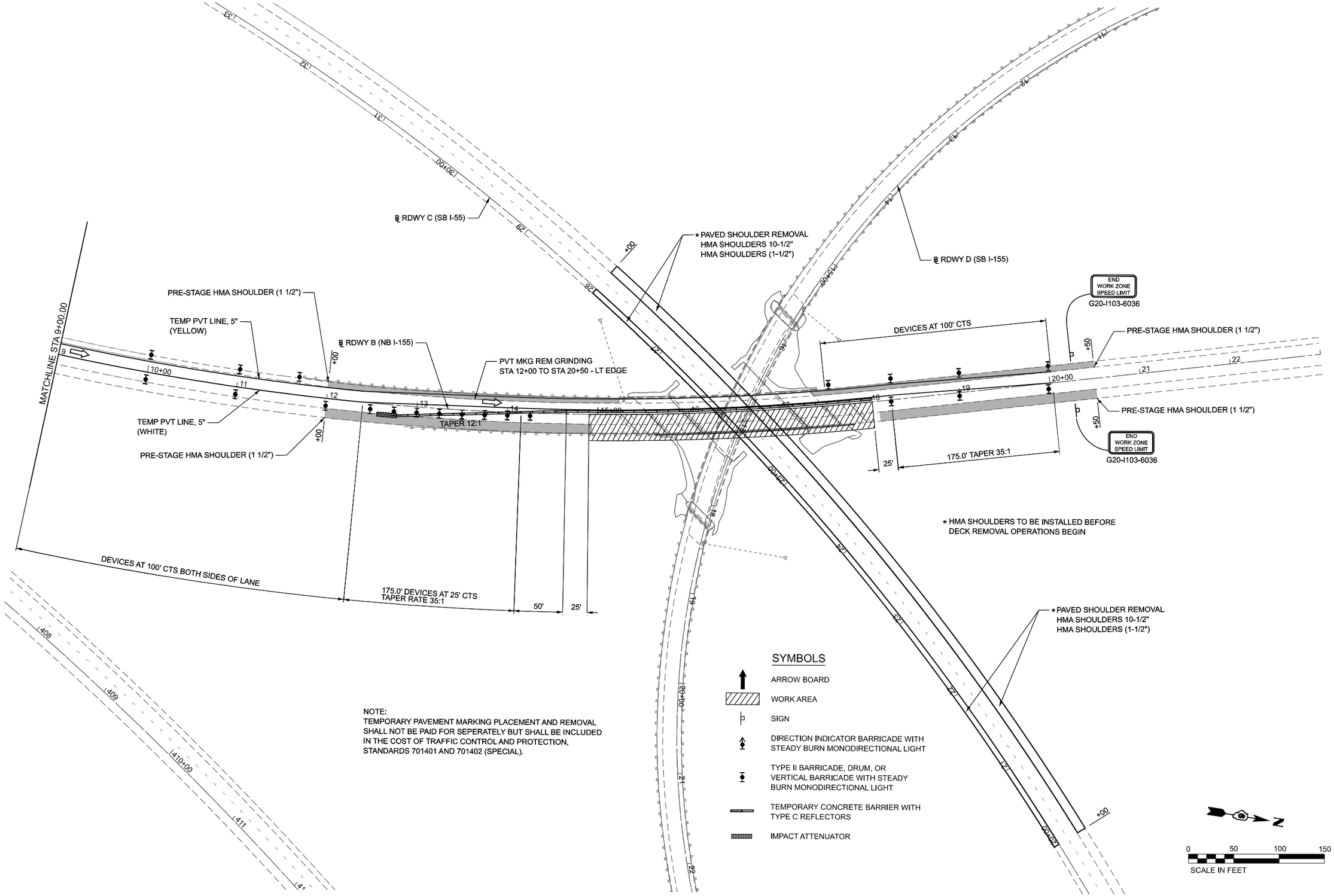

NOTE:
TEMPORARY PAVEMENT MARKING PLACEMENT AND REMOVAL SHALL NOT BE PAID FOR SEPERATELY BUT SHALL BE INCLUDED IN THE COST OF TRAFFIC CONTROL AND PROTECTION, STANDARDS 701401 AND 701402 (SPECIAL).

MODEL: I-155NB - Plan 2 [Sheet]
FILE NAME: C:\SP\WHKS & CO\Jobs-Spring - Projects\Civil Design\9490 D-6 On-Call\9490.03 I-55 155 Deck Replacements\CADD10.12\CADD Data\Sheets\D672220-SHT-staging1_I-155NB_SN0540050.dgn

design firm no. 184001036 whks engineers + planners + land surveyors	USER NAME = bjohnson	DESIGNED - GSJ	REVISED -	STATE OF ILLINOIS DEPARTMENT OF TRANSPORTATION	MAINTENANCE OF TRAFFIC - STAGE 1 I-155 BRIDGE DECK REPLACEMENTS
		DRAWN - GSJ	REVISED -		
	PLOT SCALE = 0.16666633 ' / in.	CHECKED - RKA	REVISED -		
	PLOT DATE = 12/19/2024	DATE - 11/9/2023	REVISED -		SCALE: 1"=50' SHEET 3 OF 6 SHEETS STA. 9+00.00 R2 TO STA. 23+00.00 R2

F.A.I. RTE.	SECTION	COUNTY	TOTAL SHEETS	SHEET NO.
155	(54-4HB)D	LOGAN	133	31
		CONTRACT NO. 72220		
	ILLINOIS	FED. AID PROJECT		

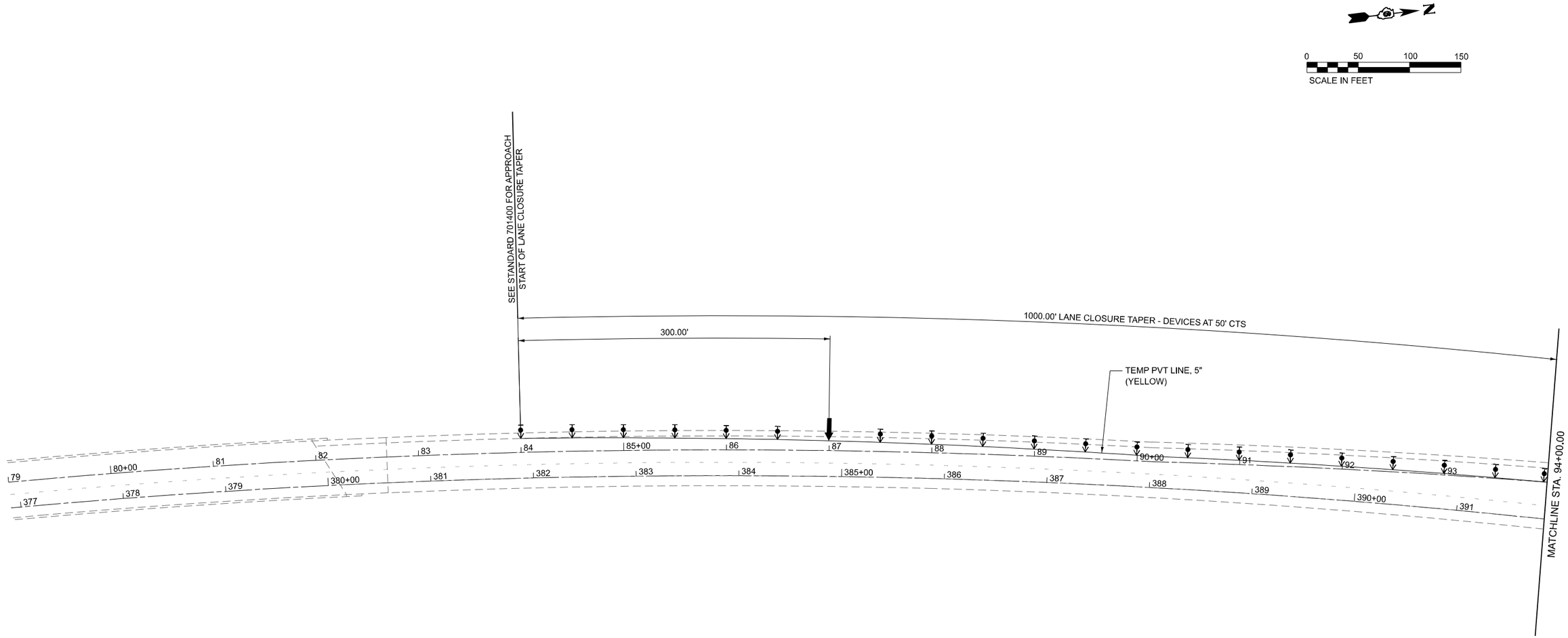

SYMBOLS

- ARROW BOARD
- WORK AREA
- SIGN
- DIRECTION INDICATOR BARRICADE WITH STEADY BURN MONODIRECTIONAL LIGHT
- TYPE II BARRICADE, DRUM, OR VERTICAL BARRICADE WITH STEADY BURN MONODIRECTIONAL LIGHT
- TEMPORARY CONCRETE BARRIER WITH TYPE C REFLECTORS
- IMPACT ATTENUATOR

NOTE:
TEMPORARY PAVEMENT MARKING PLACEMENT AND REMOVAL SHALL NOT BE PAID FOR SEPERATELY BUT SHALL BE INCLUDED IN THE COST OF TRAFFIC CONTROL AND PROTECTION, STANDARDS 701401 AND 701402 (SPECIAL).

MODEL: I-155NB - Plan 0 [Sheet]
FILE NAME: C:\SP\WHKS & CO\Jobs-Spring - Projects\Civil Design\9490 D4 On-Call\9490.03 I-55 155 Deck Replacements\CADD10.12\CADD Data\Sheets\D672220-SHT-staging2_I-155NB_SN0540050.dgn

design firm no. 184001036 whks engineers • planners • land surveyors

USER NAME = bjohnson	DESIGNED - GSJ	REVISED -	
	DRAWN - GSJ	REVISED -	
PLOT SCALE = 0.16666633 ' / in.	CHECKED - RKA	REVISED -	
PLOT DATE = 12/19/2024	DATE - 11/9/2023	REVISED -	

STATE OF ILLINOIS
DEPARTMENT OF TRANSPORTATION

MAINTENANCE OF TRAFFICE - STAGE 2
I-155 BRIDGE DECK REPLACEMENTS

SCALE: 1"=50' | SHEET 4 OF 6 SHEETS | STA. 79+00.00 TO STA. 94+00.00

F.A.I. RTE.	SECTION	COUNTY	TOTAL SHEETS	SHEET NO.
155	(54-4HB)D	LOGAN	133	32
		CONTRACT NO. 72220		
		ILLINOIS FED. AID PROJECT		

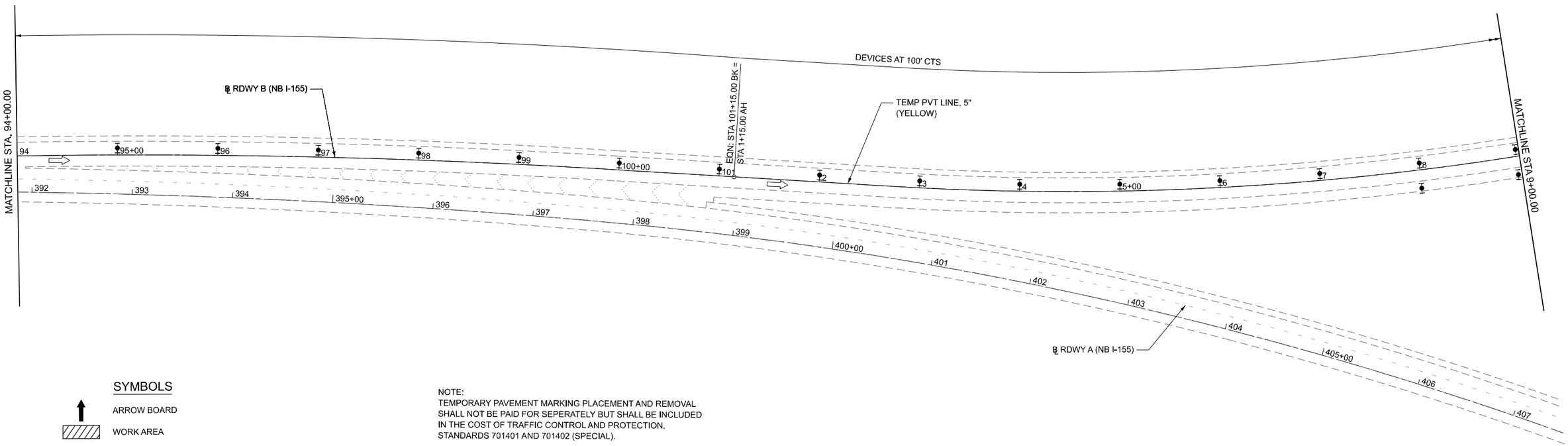

SYMBOLS

- ARROW BOARD
- WORK AREA
- SIGN
- DIRECTION INDICATOR BARRICADE WITH STEADY BURN MONODIRECTIONAL LIGHT
- TYPE II BARRICADE, DRUM, OR VERTICAL BARRICADE WITH STEADY BURN MONODIRECTIONAL LIGHT
- TEMPORARY CONCRETE BARRIER WITH TYPE C REFLECTORS
- IMPACT ATTENUATOR

NOTE:
TEMPORARY PAVEMENT MARKING PLACEMENT AND REMOVAL SHALL NOT BE PAID FOR SEPERATELY BUT SHALL BE INCLUDED IN THE COST OF TRAFFIC CONTROL AND PROTECTION, STANDARDS 701401 AND 701402 (SPECIAL).

MODEL: I-155NB - Plan 1 [Sheet]
FILE NAME: C:\SP\WHKS & COUobs-Spring - Projects\Civil Design\9490 D-6 On-Call\9490.03 I-55 I-155 Deck Replacements\CADD10.12\CADD Data\Sheets\D672220-SHT-staging2_I-155NB_SN0540050.dgn

design firm no. 184001036
whks
engineers + planners + land surveyors

USER NAME = gjameson	DESIGNED - GSJ	REVISED -	
	DRAWN - GSJ	REVISED -	
PLOT SCALE = 0.16666633 ' / in.	CHECKED - RKA	REVISED -	
PLOT DATE = 12/19/2024	DATE - 11/9/2023	REVISED -	

STATE OF ILLINOIS
DEPARTMENT OF TRANSPORTATION

MAINTENANCE OF TRAFFICE - STAGE 2
I-155 BRIDGE DECK REPLACEMENTS

SCALE: 1"=50' | SHEET 5 OF 6 SHEETS | STA. 94+00.00 TO STA. 9+00.00 R2

F.A.I. RTE.	SECTION	COUNTY	TOTAL SHEETS	SHEET NO.
155	(54-4HB)D	LOGAN	133	33
		CONTRACT NO. 72220		
		ILLINOIS	FED. AID PROJECT	

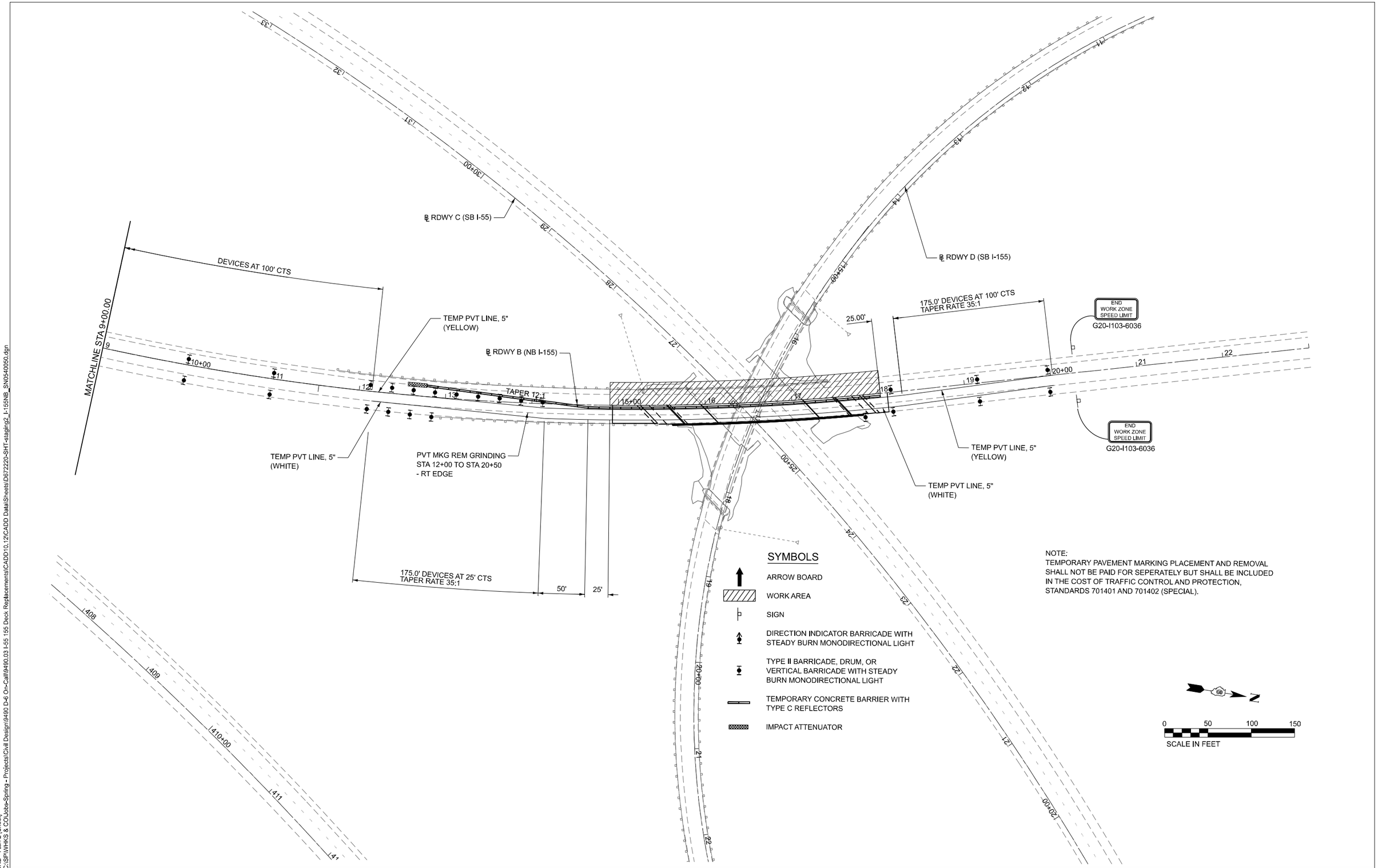

MODEL: I-155NB - Plan 2 [Sheet]
FILE NAME: C:\SP\WHKS & CO\Jobs-Spring - Projects\Civil Design\9490 D-6 On-Call\9490.03 I-55 155 Deck Replacements\CADD10.12\CADD Data\Sheets\D672220-SHT-staging2_I-155NB_SN0540050.dgn

design firm no. 184001036 whks engineers + planners + land surveyors	USER NAME = gjameson	DESIGNED - GSJ	REVISED -	STATE OF ILLINOIS DEPARTMENT OF TRANSPORTATION	MAINTENANCE OF TRAFFICE - STAGE 2 I-155 BRIDGE DECK REPLACEMENTS				F.A.I. RTE.	SECTION	COUNTY	TOTAL SHEETS	SHEET NO.
		DRAWN - GSJ	REVISED -						155	(54-4HB)D	LOGAN	133	34
	PLOT SCALE = 0.16666633 ' / in.	CHECKED - RKA	REVISED -								CONTRACT NO. 72220		
	PLOT DATE = 12/19/2024	DATE - 11/9/2023	REVISED -		SCALE: 1"=50'	SHEET 6 OF 6 SHEETS	STA. 9+00.00 R2	TO STA. 23+00.00 R2			ILLINOIS	FED. AID PROJECT	

B.M. Chiseled square in S.W. approach wall N.B. I-155 S.N. 054-0050, Sta. 15+33.3, 19' Lt, Ramp "B", Elev. 589.51.
Existing Structure: S.N. 054-0050, built in 1972 as Supplemental Freeway N.B. Roadway "B" over FAI Route 55 S.B. Roadway "C", Section 54-4HB, is a 3 span vaulted abutment bridge, consisting of one welded steel curved ℄ girder main span and two straight PPC-I Beam approach spans. The approach bents are supported on timber piles and the abutments utilize pile supported concrete footings. The existing structure is 193'-9" back-to-back of abutments along the local tangent. The existing deck width is 42'-0" out-to-out radially.

Traffic Control: One lane of traffic will be maintained utilizing stage construction.

Salvage: Existing aluminum bridge rail and pedestals shall be delivered to the IDOT District 6 Bridge Crew Yard in Springfield, IL.

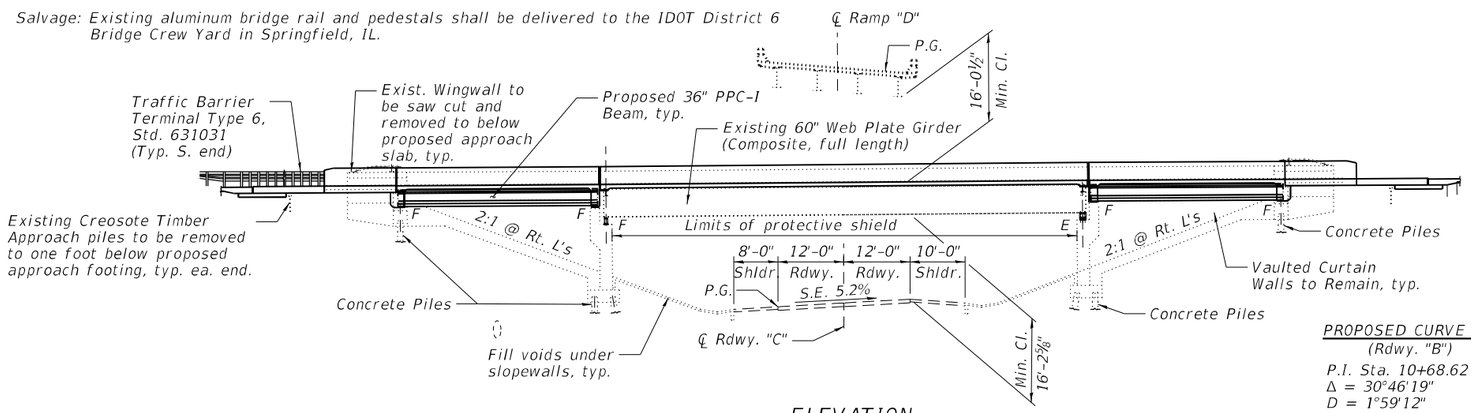

ELEVATION

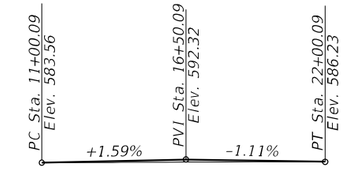

PROFILE GRADE

Up to ¼ inch to be ground off the bridge deck and the bridge approach slabs.
The Profile Grade shows the final grade after grinding.

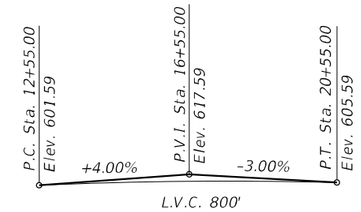

PROFILE GRADE

(along Left Edge of Ramp "D")

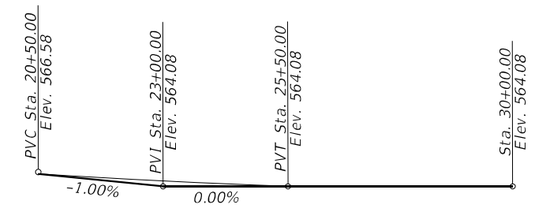

PROFILE GRADE

(along Left Edge of Rdwy. "C")

PROPOSED CURVE DATA

(Rdwy. "B")

P.I. Sta. 10+68.62
Δ = 30°46'19"
D = 1°59'12"
R = 2,883.98'
T = 793.62'
L = 1548.90'
E = 107.20'
S.E. =0.060'/'
P.C. Sta. 2+75.00
P.C. Sta. 18+23.90

DESIGN SPECIFICATIONS (New Const.)

2020 AASHTO LRFD Bridge Design Specifications, 9th Edition &
2006 Seismic Retrofitting Manual for Highway Structures: Part 1 (Bridges)

LOADING HL-93

Allow 25#/sq. ft. for future wearing surface.

DESIGN STRESSES

FIELD UNITS (New Construction)

f'c = 3,500 psi (Substructure)
f'c = 4,000 psi (Superstructure Concrete)
fy = 60,000 psi (Reinforcement)
fy = 50,000 psi (M270 Grade 50) (Structural Steel)

PRECAST PRESTRESSED UNITS (New Construction)

f'c = 6,000 psi
f'ci = 5,000 psi
fpu = 270 ksi (0.5" ∅ Low Relaxation Strands)
fpbt = 202.5 ksi (0.5" ∅ Low Relaxation Strands)

FIELD UNITS (Existing Construction)

fc = 1,200 psi (Deck Slab)
fc = 1,400 psi (All other concrete)
fs = 20,000 psi (Reinf.)
fs = 27,000 psi (Structural Steel)

SEISMIC DATA

Seismic Retrofit Category (SRC) = A
Design Spectral Acceleration at 1.0 sec. (SD1) = 0.132g
Design Spectral Acceleration at 0.2 sec. (SDS) = 0.224g
Soil Site Class = D
Performance Level (PL) = PL1

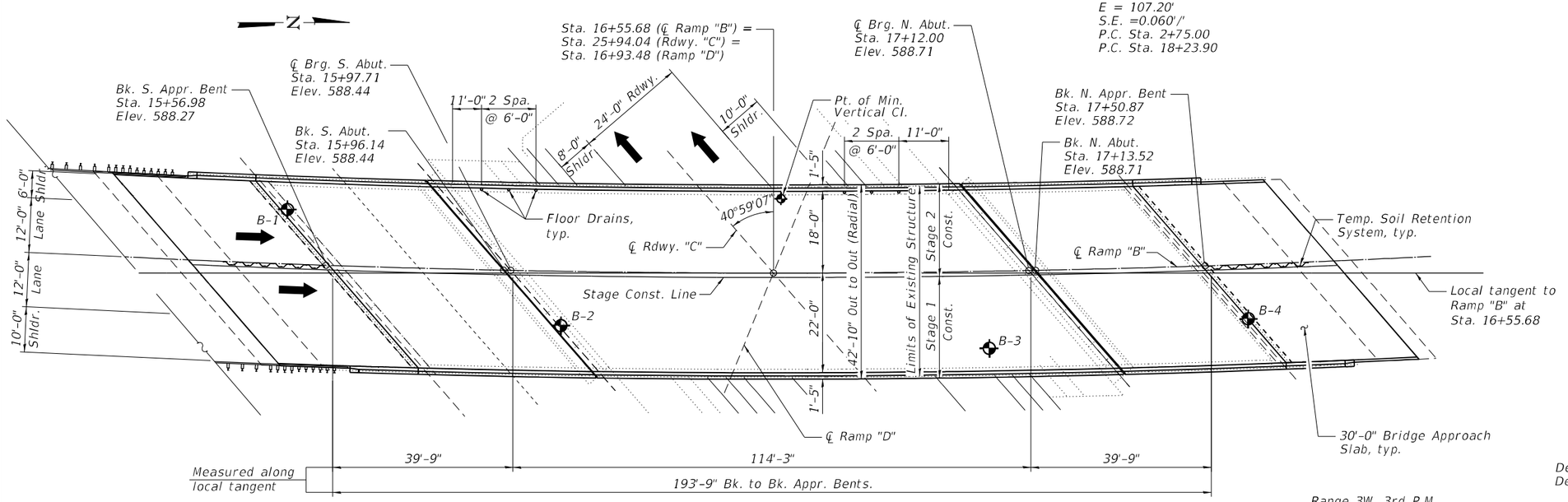

PLAN

APPROVED
For Structural Adequacy Only
Engineer of Bridges & Structures

Plans prepared by Civil Design, Inc.
LICENSED STRUCTURAL ENGINEER
JASON G. SCHRECKENBERG
081.006845
STATE OF ILLINOIS
Date: 03/14/2025
Expires: 11/30/2026

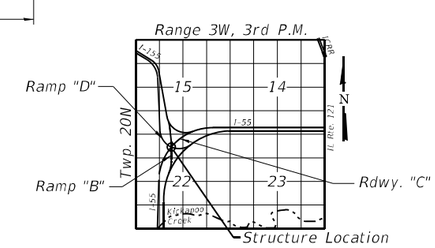

LOCATION SKETCH

GENERAL PLAN & ELEVATION
I-155 N.B. RAMP "B" OVER I-55 S.B.
FAI ROUTE 155 - SECTION (54-4B)D
LOGAN COUNTY
STATION 16+55.68
STRUCTURE NO. 054-0050

MODEL: Default
FILE NAME: P:\Transportation\4854 - IDOT PTB 198-023 D6\DWGs\CADD 50\054-0050-72220-001-GPF.dgn

CIVIL DESIGN, INC. WBE / DBE EFFINGHAM, IL LICENSE #184.003222	USER NAME = $USER$	DESIGNED - RT	REVISED -
		DRAWN - DS	REVISED -
	PLOT SCALE = $SCALE$	CHECKED - JS	REVISED -
	PLOT DATE = 3/27/2025	DATE - 3/2025	REVISED -

STATE OF ILLINOIS
DEPARTMENT OF TRANSPORTATION

GENERAL PLAN & ELEVATION
STRUCTURE NO. 054-0050

SCALE: | SHEET 1 OF 38 SHEETS | STA. | TO STA.

F.A.I. RTE.	SECTION	COUNTY	TOTAL SHEETS	SHEET NO.
155	(54-4HB)D	LOGAN	133	35
		CONTRACT NO. 72220		
		ILLINOIS	FED. AID PROJECT	

GENERAL NOTES

Fasteners shall be ASTM F 3125 Grade A325 Type 1, mechanically galvanized bolts in painted areas. Bolts ¾ in. diameter, holes 13/16 in. diameter, unless otherwise noted.

Calculated weight of Structural Steel = 5,040 lbs. (AASHTO M270 Grade 50)
5,360 lbs. (AASHTO M270 Grade 36)

All structural steel shall be AASHTO M270 Grade 50 except for MC and C shapes.

No field welding is permitted except as specified in the contract documents.

Reinforcement bars designated (E) shall be epoxy coated.

Prior to pouring the new concrete deck, all heavy or loose rust, loose mill scale, and other loose detrimental foreign material shall be removed from the surfaces in contact with concrete(SSPC – SP3 standards). Tightly adhered paint may remain unless otherwise noted. Removal shall be accomplished by methods that will not damage the steel and the cost will be paid for according to Article 109.04 of the Standard Specifications.

As directed by the Engineer, existing construction accessories welded to the top flange of beams and girders shall be removed. The weld areas shall be ground flush and inspected for cracks using magnetic particle testing (MT) or dye penetrant testing (PT) by qualified personnel approved by the Engineer. Any cracks that cannot be removed by grinding ¼ in. deep shall be identified and reported to the Bureau of Bridges & Structures for further disposition. The cost of removing welded accessories, grinding and inspecting weld areas and grinding cracks will be paid for according to Article 109.04 of the Standard Specifications.

Plan dimensions and details relative to the existing structure have been taken from existing plans are subject to nominal construction variations. The Contractor shall field verify existing dimensions and details affecting new construction and make necessary approved adjustments prior to construction or ordering of materials. Such variations shall not be cause for additional compensation for a change in scope of the work, however, the Contractor will be paid for the quantity actually furnished at the unit price bid for the work.

If the Contractor elects to use cantilever forming brackets on the exterior beams or girders, the brackets shall be placed at the same locations as required for the hardwood blocks in Article 503.06(b) of the Standard Specifications. If additional cantilever forming brackets are required, hardwood blocking shall be wedged between the exterior and first interior beam at each of these additional bracket locations.

Concrete Sealer shall be applied to the face of the concrete abutment diaphragms beneath the superstructure performed joint strip seals.

Existing structural steel shall only be cleaned and painted as required by the Special Provision for "Cleaning and Painting Contract Surface Areas of Existing Steel Structures."

All new Structural Steel and bearing assemblies shall be hot-dip galvanized. See Special Provision for "Hot Dip Galvanizing for Structural Steel".

The existing structural steel coating contains lead. The Contractor shall take appropriate precautions to address the presence of lead on this project.

Cleaning and painting of the existing structural steel shall be as specified in the special provision for "Cleaning and Painting Existing Steel Structures". Areas to be cleaned and painted shall include all beam ends, end diaphragms, and steel components of bearings at both abutments. Beam end painting (12 ends) shall extend 10 feet from the end of the beams longitudinally. Galvanized bearings and structural steel encountered at the abutments shall be protected from normal blast cleaning operations and shall have surfaces prepared per the applicable sections of the special provision for "Cleaning and Painting Existing Steel Structures". All other areas shall be cleaned per Near White Blast Cleaning – SSPC- SP10. All areas to be painted shall be painted according to the requirements of Organic Zinc-Rich Primer/Epoxy Intermediate Coat/Urethane Topcoat (OZ/E/U). The color of the final finish coat for the exterior and bottom flange of the fascia beams shall be Interstate Green, Munsell No. 7.5G 4/8. All other surfaces shall be gray, Munsell 5B 7/1. SSPC QP1 (and SSPC QP2) Certification is required for this contract.

Existing reinforcement bars extending into the removal areas shall be cleaned, straightened and incorporated into the new construction. Any reinforcement bars that are damaged during concrete removal shall be replaced with an approved bar splicer or anchorage system. Cost included with Concrete Removal.

INDEX OF SHEETS

STA. 16+55.58
BUILT 202X BY
STATE OF ILLINOIS
F.A.I. RT. 155
SEC. 54-4HB
LOADING HL-93
STR. NO. 054-0050

NAME PLATE

See Std. 515001

Existing Name Plate shall be cleaned and relocated next to new Name Plate. Cost included with Name Plates.

GENERAL NOTES (CONT.)

The concrete for bridge decks finished according to Article 503.16(a) of the Standard Specifications shall be placed and compacted parallel to the skew in uniform increments along centerline of bridge. The machine used for finishing shall be set parallel to the skew for striking off and screeding the concrete.

Salvage aluminum rail and deliver to bridge crew yard in Springfield.

SCOPE OF WORK

1. Remove existing cross frames in main span prior to Stage I concrete deck removal.
2. Remove existing concrete deck utilizing stage construction, while providing protective shield over traffic below.
3. Remove and replace existing PPC I beams in vaulted spans.
4. Remove existing rocker expansion bearings, at the abutments, replace with elastomeric bearings and raise superstructure 1.5" to match profile grade.
5. Perform concrete repairs on substrcuture units.
6. Repair damaged slope walls and fill voids under slope walls.
7. Strengthen steel girder ends as detailed.
8. Clean and paint all steel girder ends.
9. Remove existing top of wingwall to allow construction of bridge approach slab.
10. Construct new 8¼" concrete deck, parapets, and approach slabs. Complete diamond grinding and deck grooving.

TOTAL BILL OF MATERIAL

ITEM	UNIT	SUPER	SUB	TOTAL
Concrete Removal	Cu. Yd.	-	48.5	48.5
Removal of Existing Concrete Deck No. 1	Each	1	-	1
Protective Shield	Sq. Yd.	359	-	359
Structure Excavation	Cu. Yd.	-	98	98
Floor Drains	Each	6	-	6
Concrete Structures	Cu. Yd.	-	25.4	25.4
Concrete Superstructure	Cu. Yd.	317.4	-	317.4
Protective Coat	Sq. Yd.	1,035	-	1,035
Concrete Superstructure (Approach Slab)	Cu. Yd.	118.8	-	118.8
Furnishing and Erecting Precast Prestressed Concrete I-Beams, 36 Inches	Foot	288	-	288
Cleaning and Painting Structural Steel, Location 1	L. Sum	1	-	1
Reinforcement Bars, Epoxy Coated	Pound	144,310	6,190	150,500
Bar Splicers	Each	957	-	957
Name Plates	Each	1	-	1
Preformed Joint Strip Seal	Foot	110	-	110
Elastomeric Bearing Assembly, Type I	Each	6	-	6
Steel Bearing Assembly	Each	6	-	6
Anchor Bolts, 1"	Each	44	-	44
Anchor Bolts, 1 1/2"	Each	12	-	12
Temporary Soil Retention System	Sq. Ft.	-	50	50
Granular Backfill for Structures	Cu. Yd.	-	75	75
Concrete Sealer	Sq. Ft.	329	-	329
Bar Terminators	Each	60	-	60
Bridge Deck Grooving (Longitudinal)	Sq. Yd.	517	-	517
Jack and Remove Existing Bearings	Each	12	-	12
Structural Steel Repair	Pound	5,290	-	5,290
Removal of Existing Concrete I-Beam	Each	8	-	8
Approach Slab Removal	Sq. Yd.	187	-	187
Containment and Disposal of Lead Paint Cleaning Residues No. 1	L. Sum	1	-	1
Structural Repair of Concrete (Depth equal to or less than 5")	Sq. Ft.	-	150	150
Diamond Grinding (Bridge Section)	Sq. Yd.	1,128	-	1,128
Slope Wall Repair	Sq. Yd.	-	15.3	15.3
Slope Wall Slurry Pumping	Cu. Yd.	-	3.4	3.4

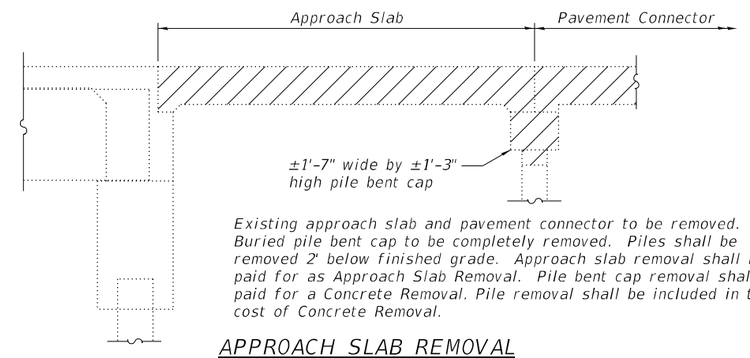

Existing approach slab and pavement connector to be removed. Buried pile bent cap to be completely removed. Piles shall be removed 2' below finished grade. Approach slab removal shall be paid for as Approach Slab Removal. Pile bent cap removal shall be paid for a Concrete Removal. Pile removal shall be included in the cost of Concrete Removal.

APPROACH SLAB REMOVAL

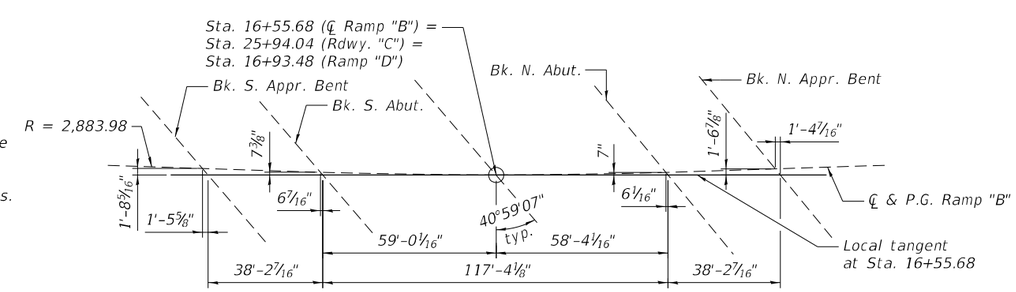

OFFSET SKETCH

MODEL: Default
FILE NAME: P:\Transportation\4854 - IDOT PTB 198-123 D600W04\CADD-50054-0050-72220-002-Gen Data.dgn

CIVIL DESIGN, INC. WBE / DBE EFFINGHAM, IL LICENSE #184.003222	USER NAME = $USER$	DESIGNED -	REVISED -
		DRAWN -	REVISED -
	PLOT SCALE = $SCALE$	CHECKED -	REVISED -
	PLOT DATE = 12/19/2024	DATE -	REVISED -

STATE OF ILLINOIS
DEPARTMENT OF TRANSPORTATION

GENERAL DATA
STRUCTURE NO. 054-0050

SCALE: SHEET 2 OF 63 SHEETS STA. TO STA.

F.A.I. RTE.	SECTION	COUNTY	TOTAL SHEETS	SHEET NO.
155	(54-4HB)D	LOGAN	133	36
		CONTRACT NO. 72220		
	ILLINOIS	FED. AID PROJECT		

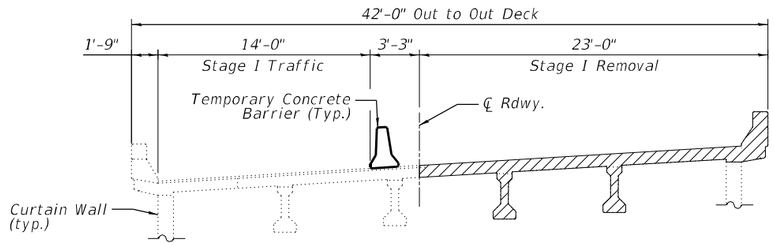

STAGE I REMOVAL

All dimensions are radial.

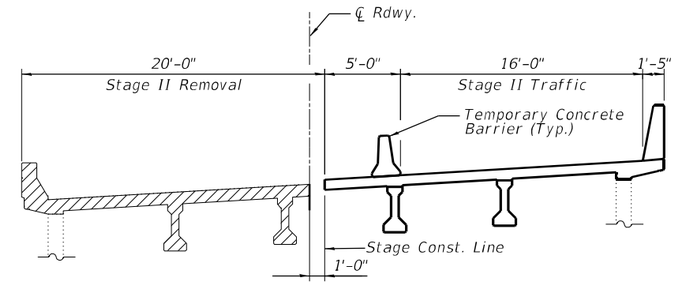

STAGE II REMOVAL

All dimensions are radial.

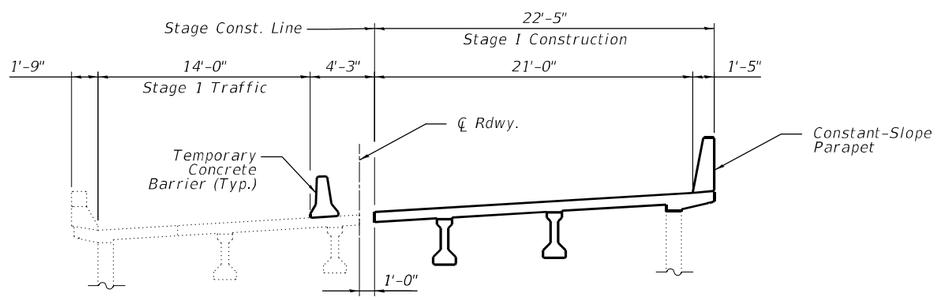

STAGE I CONSTRUCTION

All dimensions are radial.

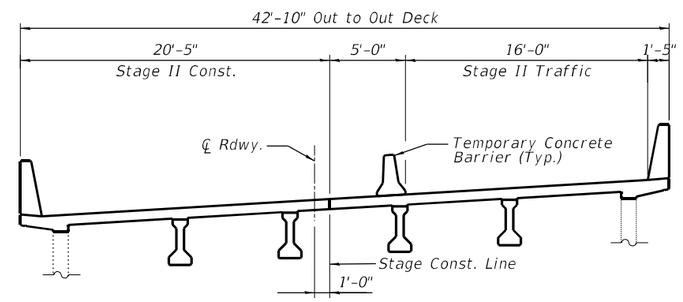

STAGE II CONSTRUCTION

All dimensions are radial.

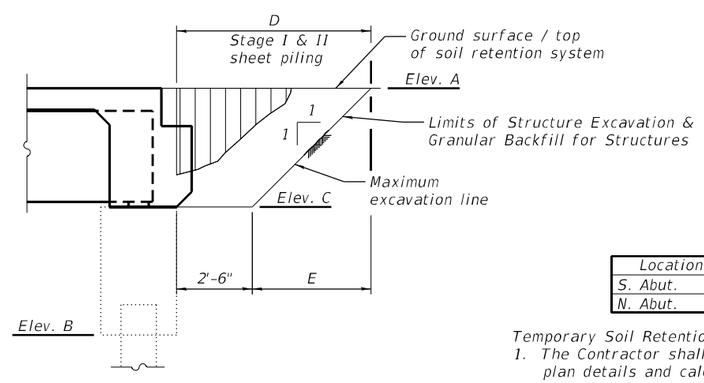

TEMPORARY SOIL RETENTION SYSTEM

Location	Elev. A	Elev. B	Elev. C	Dim. D	Dim. E
S. Abut.	588.53	581.21	584.04	7'-0"	4'-6"
N. Abut.	589.02	581.75	581.58	7'-0"	4'-6"

Temporary Soil Retention Notes:

1. The Contractor shall submit a temporary soil retention system design including plan details and calculations for review and acceptance by the Engineer.
2. Elevations and dimensions shown are approximate based on existing plan data. Exact elevations and dimensions are required shall be field verified by the Contractor.

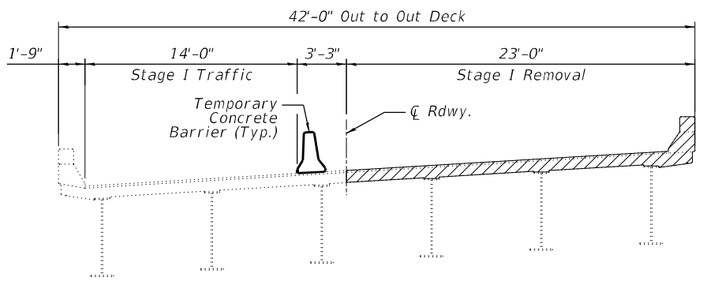

STAGE I REMOVAL

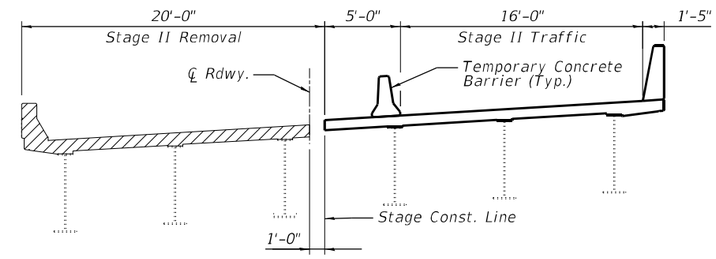

STAGE II REMOVAL

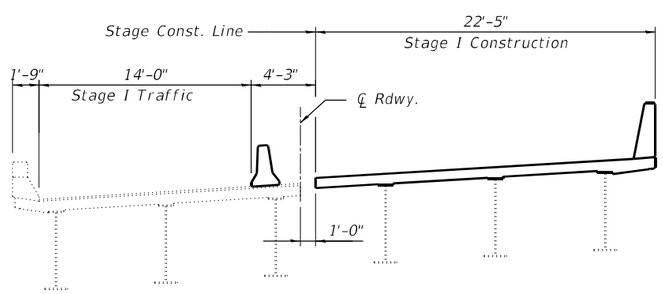

STAGE I CONSTRUCTION

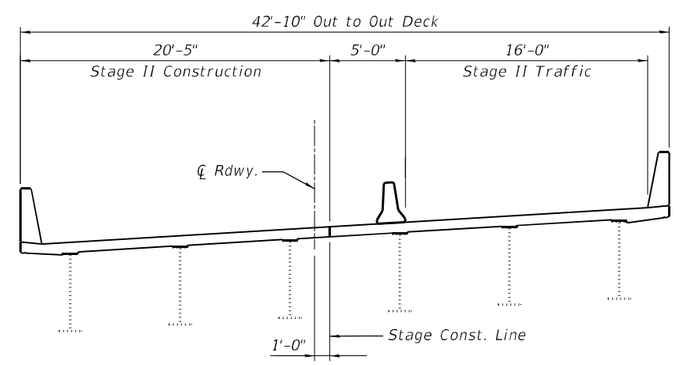

STAGE II CONSTRUCTION

Note:
All dimensions are radial.

MODEL: Default
FILE NAME: P:\Transportation\4854 - IDOT PTB 198-023 D60WOA\CADD 50\054-0050-72220-004-Stg Const02.dgn

CDI CIVIL DESIGN, INC. WBE / DBE EFFINGHAM, IL LICENSE #184.003222	USER NAME = $USER$	DESIGNED -	REVISED -	STATE OF ILLINOIS DEPARTMENT OF TRANSPORTATION	STAGED CONSTRUCTION – MAIN SPAN STRUCTURE NO. 054–0050	F.A.I. RTE.	SECTION	COUNTY	TOTAL SHEETS / SHEET NO.
		DRAWN -	REVISED -			155	(54-4HB)D	LOGAN	133 / 38
	PLOT SCALE = $SCALE$	CHECKED -	REVISED -					CONTRACT NO. 72220	
	PLOT DATE = 12/19/2024	DATE -	REVISED -		SCALE: SHEET 4 OF 63 SHEETS STA. TO STA.		ILLINOIS	FED. AID PROJECT	

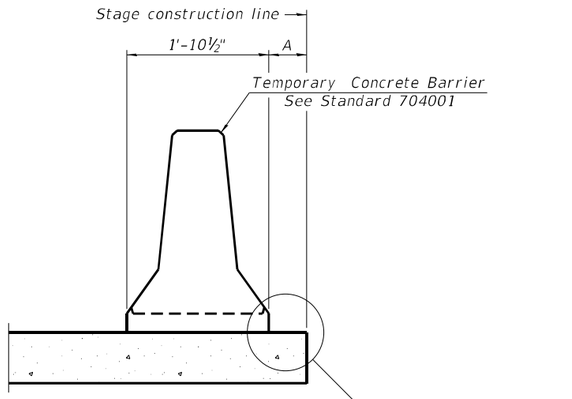

When "A" is 3'-1" or less, the temporary concrete barrier shall be restrained to the new slab according to Detail I, II or III. No restraint is required when "A" is greater than 3'-1".

NEW SLAB OR NEW DECK BEAM

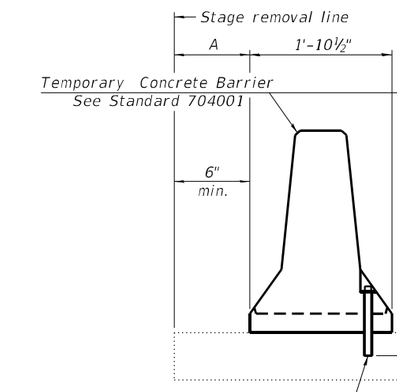

Drill 3-1¼" Ø Holes in existing slab for 1" Ø restraining pins. Traffic side only. Cost of restraining pins are included with Temporary Concrete Barrier. No restraint is required when "A" is greater than 3'-1".

EXISTING SLAB

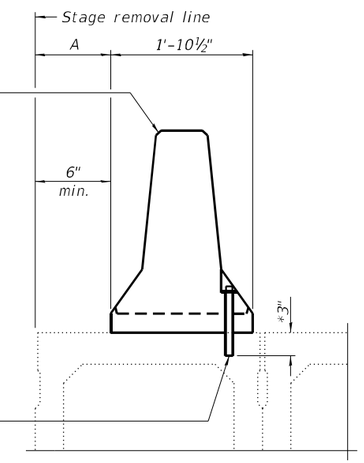

* When hot-mix asphalt wearing surface is present, embedment shall be 3" plus the wearing surface depth.

EXISTING DECK BEAM

SECTIONS THRU SLAB OR DECK BEAM

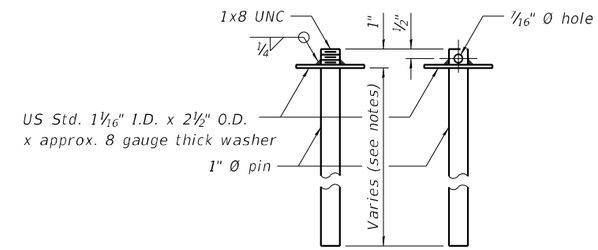

RESTRAINING PIN

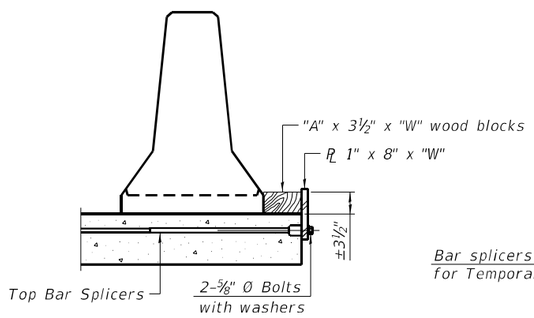

DETAIL I

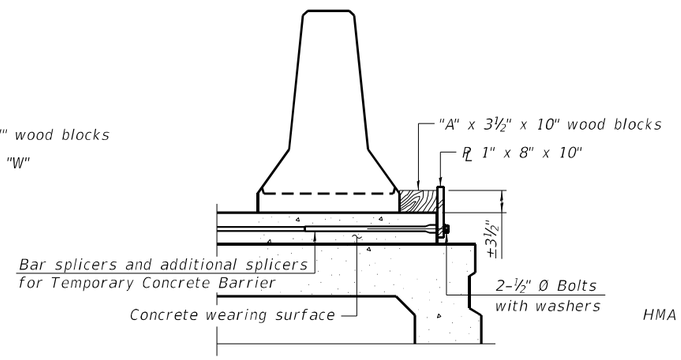

DETAIL II

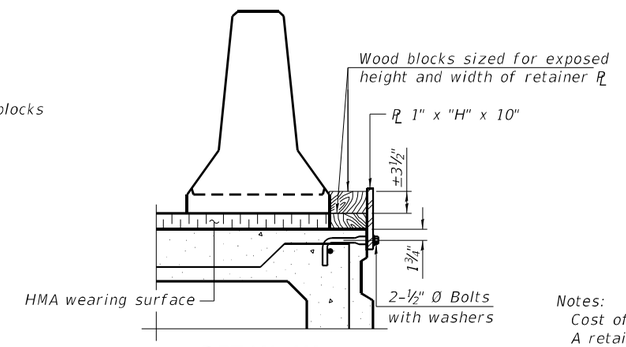

DETAIL III

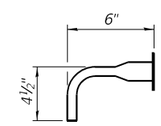

BAR SPLICER FOR #4 BAR - DETAIL III

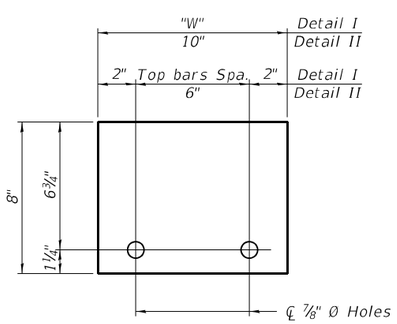

STEEL RETAINER PL 1" x 8" x "W"

(Detail I and II)

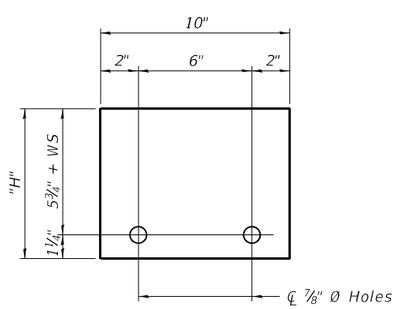

STEEL RETAINER PL 1" x "H" x 10"

(Detail III)

Notes:

Cost of retainer assembly is included with Temporary Concrete Barrier.

A retainer assembly shall be located at the approximate ℄ of each temporary concrete barrier.

The retainer plate shall not be removed until the concrete on the adjacent stage is ready to be poured. For Detail III applications the retainer plate shall not be removed until just prior to placing the adjacent beam.

When the 'A' dimension is less than 1½", the wood block shall be omitted and the barrier shall be placed in direct contact with the steel retainer plate. For deck beam applications the minimum required 'A' distance is 6" to accommodate the shear key clamping device.

Detail I - Installation for a new bridge deck or bridge slab.

Detail II - Installation for a new deck beam with an initial concrete wearing surface. Additional bar splicers shall be provided at 6'-0" centers and paired with the bar splicers of the concrete wearing surface reinforcement to accommodate the installation of the retainer assemblies. The cost of the additional bar splicers is included with the concrete wearing surface.

Detail III - Installation for a new deck beam with no initial wearing surface or with an initial hot-mix asphalt (HMA) wearing surface present. The deck beam directly beneath the temporary concrete barrier shall be fabricated with bar splicer inserts in the side of the beam, as detailed, to accommodate the installation of the retainer assemblies. A pair of bar splicers, 6" apart, shall be placed at 6'-0" centers along the length of the beam. The cost of the bar splicers is included with the deck beam.

RAILING CRITERIA

NCHRP 350 Test Level	3
Railing Weight (plf)	440

R-27

10-12-2021

MODEL: Default
FILE NAME: P:\Transportation\4854 - IDOT PTB 198-023 D6\WO4\CADD 56\054-0050-72220-005-Temp Barrier.dgn

CDI CIVIL DESIGN, INC. WBE / DBE EFFINGHAM, IL LICENSE #184.003222

USER NAME = $USER$	DESIGNED -	REVISED -	
	DRAWN -	REVISED -	
PLOT SCALE = $SCALE$	CHECKED -	REVISED -	
PLOT DATE = 12/19/2024	DATE -	REVISED -	

STATE OF ILLINOIS
DEPARTMENT OF TRANSPORTATION

TEMPORARY CONCRETE BARRIER
STRUCTURE NO. 054-0050

SCALE: SHEET 5 OF 63 SHEETS STA. TO STA.

F.A.I. RTE.	SECTION	COUNTY	TOTAL SHEETS	SHEET NO.
155	(54-4HB)D	LOGAN	133	39
		CONTRACT NO. 72220		
	ILLINOIS	FED. AID PROJECT		

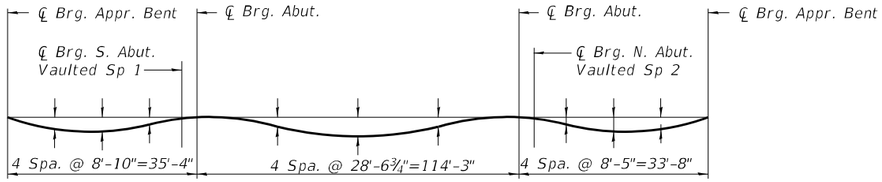

DEAD LOAD DEFLECTION DIAGRAM

(Includes weight of concrete only.)

Note:
The above deflections are not to be used in the field if the engineer is working from the grade elevations adjusted for dead load deflections and grinding as shown below.

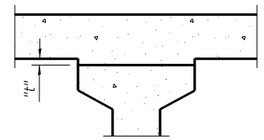

To determine "t": After all precast prestressed beams have been erected, elevations of the top flanges of the beams shall be taken at intervals shown below. These elevations subtracted from the "Theoretical Grade Elevations Adjusted for Dead Load Deflections" shown below, minus slab thickness, equals the fillet heights "t" above top flanges of beams.

FILLET HEIGHTS

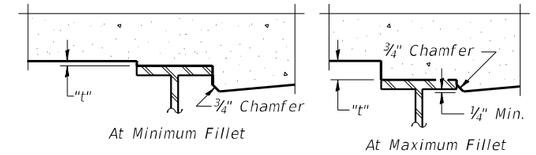

To determine "t": After all structural steel has been erected, elevations of the top flanges of the beams shall be taken at intervals shown below. These elevations subtracted from the "Theoretical Grade Elevations Adjusted for Dead Load Deflection and Grinding" shown below, minus the initial slab thickness prior to grinding, equals the fillet heights "t" above top flange of beams.

The slab is to be ground after curing to achieve smoothness, but the slab is not to be ground to elevations below the "Theoretical Grade Elevations" shown below. For grinding the deck, see Special Provisions.

FILLET HEIGHTS

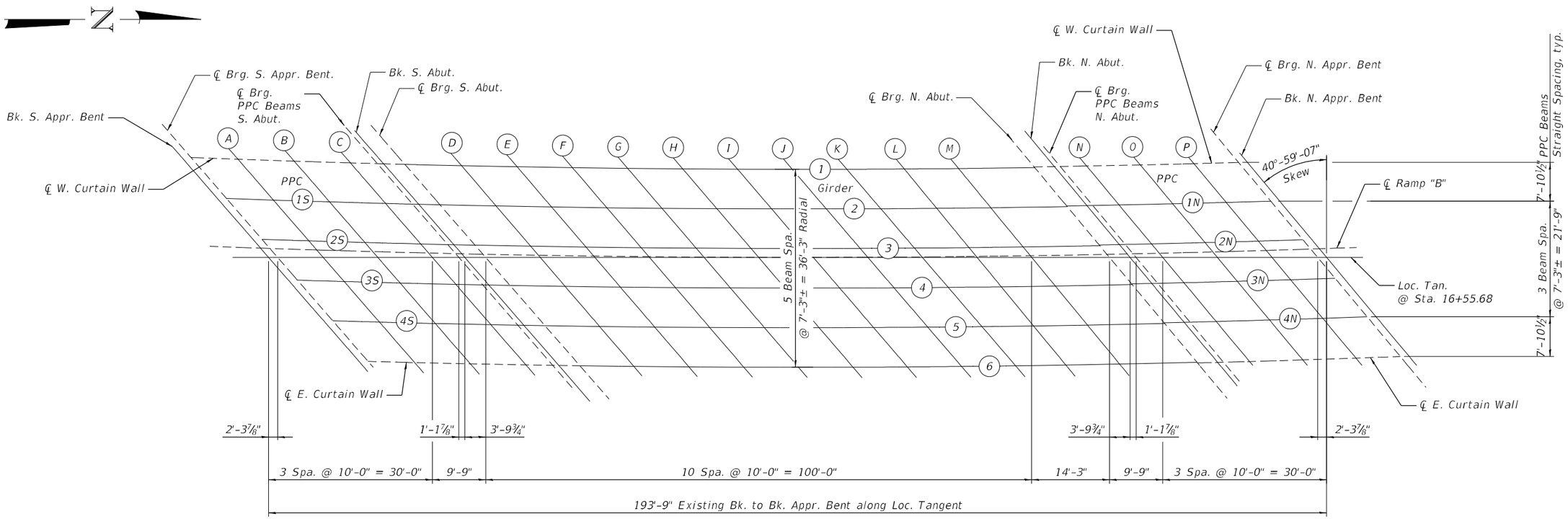

PLAN

(1 OF 3)

MODEL: Default
FILE NAME: P:\Transportation\4854 - IDOT PTB 188-023 D6\INVOA\CADD 50\054-0050-72220-006-Top Slab Elev 01.dgn

CIVIL DESIGN, INC. WBE / DBE EFFINGHAM, IL LICENSE #184.003222	USER NAME = $USER$	DESIGNED -	REVISED -	STATE OF ILLINOIS DEPARTMENT OF TRANSPORTATION	TOP OF SLAB ELEVATIONS STRUCTURE NO. 054-0050	F.A.I. RTE.	SECTION	COUNTY	TOTAL SHEETS / SHEET NO.
		DRAWN -	REVISED -			155	(54-4HB)D	LOGAN	133 / 40
	PLOT SCALE = $SCALE$	CHECKED -	REVISED -					CONTRACT NO. 72220	
	PLOT DATE = 12/19/2024	DATE -	REVISED -		SCALE: SHEET 6 OF 63 SHEETS STA. TO STA.		ILLINOIS	FED. AID PROJECT	

℄ W. CURTAIN WALL

Location	Station	Offset	Theoretical Grade Elevations	Theoretical Grade Elevations Adjusted For Dead Load Deflection and Grinding
Bk. S. Appr. Bent	15+41.40	-16.60	587.20	587.22
℄ Brg. S. Appr. Bent	15+43.37	-16.62	587.21	587.23
A	15+53.68	-16.73	587.25	587.27
B	15+63.98	-16.79	587.30	587.32
C	15+74.29	-16.82	587.34	587.36
℄ Brg. S. Abut.	15+79.57	-16.82	587.36	587.38
Bk. S. Abut.	15+80.77	-16.82	587.37	587.39

GIRDER 1S

Location	Station	Offset	Theoretical Grade Elevations	Theoretical Grade Elevations Adjusted For Dead Load Deflection and Grinding
Bk. S. Appr. Bent	15+48.75	-8.81	587.71	587.73
℄ Brg. S. Appr. Bent	15+50.71	-8.82	587.71	587.73
A	15+60.99	-8.90	587.76	587.80
B	15+71.27	-8.94	587.80	587.85
C	15+81.55	-8.94	587.84	587.88
℄ Brg. S. Abut.	15+86.81	-8.93	587.87	587.89
Bk. S. Abut.	15+88.01	-8.93	587.87	587.89

GIRDER 2S

Location	Station	Offset	Theoretical Grade Elevations	Theoretical Grade Elevations Adjusted For Dead Load Deflection and Grinding
Bk. S. Appr. Bent	15+55.48	-1.61	588.17	588.19
℄ Brg. S. Appr. Bent	15+57.44	-1.63	588.18	588.20
A	15+67.69	-1.68	588.22	588.26
B	15+77.94	-1.70	588.26	588.31
C	15+88.19	-1.68	588.31	588.34
℄ Brg. S. Abut.	15+93.45	-1.65	588.33	588.35
Bk. S. Abut.	15+94.64	-1.65	588.33	588.36

℄ ROADWAY & P.G.L.

Location	Station	Offset	Theoretical Grade Elevations	Theoretical Grade Elevations Adjusted For Dead Load Deflection and Grinding
Bk. S. Appr. Bent	15+56.98	0.00	588.27	588.29
℄ Brg. S. Appr. Bent	15+58.95	0.00	588.28	588.30
A	15+69.24	0.00	588.33	588.37
B	15+79.50	0.00	588.37	588.42
C	15+89.72	0.00	588.41	588.44
℄ Brg. S. Abut.	15+94.94	0.00	588.43	588.46
Bk. S. Abut.	15+96.14	0.00	588.44	588.46

STAGE CONST. LINE

Location	Station	Offset	Theoretical Grade Elevations	Theoretical Grade Elevations Adjusted For Dead Load Deflection and Grinding
Bk. S. Appr. Bent	15+57.91	1.00	588.34	588.36
℄ Brg. S. Appr. Bent	15+59.88	1.00	588.35	588.37
A	15+70.16	1.00	588.39	588.44
B	15+80.41	1.00	588.44	588.48
C	15+90.63	1.00	588.48	588.51
℄ Brg. S. Abut.	15+95.85	1.00	588.50	588.52
Bk. S. Abut.	15+97.04	1.00	588.50	588.52

GIRDER 3S

Location	Station	Offset	Theoretical Grade Elevations	Theoretical Grade Elevations Adjusted For Dead Load Deflection and Grinding
Bk. S. Appr. Bent	15+62.17	5.59	588.63	588.65
℄ Brg. S. Appr. Bent	15+64.13	5.58	588.64	588.66
A	15+74.35	5.55	588.68	588.73
B	15+84.58	5.56	588.73	588.77
C	15+94.81	5.61	588.77	588.80
℄ Brg. S. Abut.	16+00.05	5.64	588.79	588.81
Bk. S. Abut.	16+01.24	5.65	588.80	588.82

GIRDER 4S

Location	Station	Offset	Theoretical Grade Elevations	Theoretical Grade Elevations Adjusted For Dead Load Deflection and Grinding
Bk. S. Appr. Bent	15+68.84	12.82	589.10	589.12
℄ Brg. S. Appr. Bent	15+70.79	12.81	589.10	589.13
A	15+80.99	12.81	589.15	589.19
B	15+91.19	12.84	589.19	589.24
C	16+01.39	12.90	589.23	589.26
℄ Brg. S. Abut.	16+06.61	12.95	589.25	589.27
Bk. S. Abut.	16+07.81	12.96	589.26	589.28

℄ E. CURTAIN WALL

Location	Station	Offset	Theoretical Grade Elevations	Theoretical Grade Elevations Adjusted For Dead Load Deflection and Grinding
Bk. S. Appr. Bent	15+76.04	20.68	589.60	589.62
℄ Brg. S. Appr. Bent	15+77.98	20.68	589.61	589.63
A	15+88.15	20.70	589.65	589.67
B	15+98.33	20.75	589.69	589.71
C	16+08.50	20.85	589.73	589.75
℄ Brg. S. Abut.	16+13.71	20.91	589.76	589.78
Bk. S. Abut.	16+14.90	20.92	589.76	589.78

GIRDER 1

Location	Station	Offset	Theoretical Grade Elevations	Theoretical Grade Elevations Adjusted For Dead Load Deflection and Grinding
Bk. S. Abut.	15+81.41	-16.13	587.41	587.43
℄ Brg. S. Abut.	15+83.00	-16.13	587.42	587.44
D	15+93.27	-16.13	587.46	587.56
E	16+03.51	-16.13	587.50	587.66
F	16+13.71	-16.13	587.53	587.75
G	16+23.88	-16.13	587.57	587.82
H	16+34.02	-16.13	587.60	587.88
I	16+44.13	-16.13	587.62	587.90
J	16+54.20	-16.13	587.65	587.91
K	16+64.25	-16.13	587.67	587.90
L	16+74.26	-16.13	587.69	587.87
M	16+84.25	-16.13	587.71	587.82
℄ Brg. N. Abut.	16+98.43	-16.13	587.73	587.75
Bk. N. Abut.	16+99.96	-16.13	587.73	587.75

GIRDER 2

Location	Station	Offset	Theoretical Grade Elevations	Theoretical Grade Elevations Adjusted For Dead Load Deflection and Grinding
Bk. S. Abut.	15+88.06	-8.88	587.88	587.90
℄ Brg. S. Abut.	15+89.64	-8.88	587.88	587.90
D	15+99.87	-8.88	587.92	588.02
E	16+10.05	-8.88	587.96	588.12
F	16+20.21	-8.88	587.99	588.20
G	16+30.34	-8.88	588.02	588.27
H	16+40.43	-8.88	588.05	588.32
I	16+50.49	-8.88	588.07	588.35
J	16+60.52	-8.88	588.10	588.36
K	16+70.52	-8.88	588.12	588.34
L	16+80.50	-8.88	588.13	588.31
M	16+90.44	-8.88	588.15	588.27
℄ Brg. N. Abut.	17+04.55	-8.88	588.17	588.19
Bk. N. Abut.	17+06.08	-8.88	588.17	588.19

GIRDER 3

Location	Station	Offset	Theoretical Grade Elevations	Theoretical Grade Elevations Adjusted For Dead Load Deflection and Grinding
Bk. S. Abut.	15+94.66	-1.63	588.34	588.36
℄ Brg. S. Abut.	15+96.24	-1.63	588.34	588.36
D	16+06.41	-1.63	588.38	588.47
E	16+16.56	-1.63	588.41	588.57
F	16+26.67	-1.63	588.44	588.66
G	16+36.74	-1.63	588.47	588.73
H	16+46.79	-1.63	588.50	588.77
I	16+56.81	-1.63	588.52	588.80
J	16+66.80	-1.63	588.54	588.81
K	16+76.75	-1.63	588.56	588.79
L	16+86.68	-1.63	588.58	588.76
M	16+96.58	-1.63	588.59	588.71
℄ Brg. N. Abut.	17+10.64	-1.63	588.61	588.63
Bk. N. Abut.	17+12.16	-1.63	588.61	588.63

℄ ROADWAY & P.G.L.

Location	Station	Offset	Theoretical Grade Elevations	Theoretical Grade Elevations Adjusted For Dead Load Deflection and Grinding
Bk. S. Abut.	15+96.14	0.00	588.44	588.46
℄ Brg. S. Abut.	15+97.71	0.00	588.44	588.47
D	16+07.87	0.00	588.48	588.58
E	16+18.01	0.00	588.51	588.68
F	16+28.11	0.00	588.55	588.76
G	16+38.18	0.00	588.57	588.83
H	16+48.21	0.00	588.60	588.87
I	16+58.22	0.00	588.62	588.90
J	16+68.20	0.00	588.64	588.91
K	16+78.15	0.00	588.66	588.89
L	16+88.06	0.00	588.68	588.86
M	16+97.95	0.00	588.69	588.81
℄ Brg. N. Abut.	17+12.00	0.00	588.71	588.73
Bk. N. Abut.	17+13.52	0.00	588.71	588.73

STAGE CONST. LINE

Location	Station	Offset	Theoretical Grade Elevations	Theoretical Grade Elevations Adjusted For Dead Load Deflection and Grinding
Bk. S. Abut.	15+97.04	1.00	588.50	588.52
℄ Brg. S. Abut.	15+98.61	1.00	588.51	588.53
D	16+08.77	1.00	588.54	588.64
E	16+18.90	1.00	588.58	588.74
F	16+28.99	1.00	588.61	588.82
G	16+39.05	1.00	588.64	588.89
H	16+49.09	1.00	588.66	588.94
I	16+59.09	1.00	588.69	588.96
J	16+69.06	1.00	588.71	588.97
K	16+79.00	1.00	588.72	588.95
L	16+88.91	1.00	588.74	588.92
M	16+98.80	1.00	588.75	588.87
℄ Brg. N. Abut.	17+12.83	1.00	588.77	588.79
Bk. N. Abut.	17+14.35	1.00	588.77	588.79

GIRDER 4

Location	Station	Offset	Theoretical Grade Elevations	Theoretical Grade Elevations Adjusted For Dead Load Deflection and Grinding
Bk. S. Abut.	16+01.22	5.63	588.79	588.82
℄ Brg. S. Abut.	16+02.79	5.63	588.80	588.82
D	16+12.91	5.63	588.84	588.93
E	16+23.01	5.63	588.87	589.03
F	16+33.08	5.63	588.90	589.11
G	16+43.11	5.63	588.93	589.18
H	16+53.11	5.63	588.95	589.22
I	16+63.09	5.63	588.97	589.25
J	16+73.03	5.63	588.99	589.25
K	16+82.94	5.63	589.01	589.24
L	16+92.83	5.63	589.02	589.20
M	17+02.68	5.63	589.04	589.16
℄ Brg. N. Abut.	17+16.68	5.63	589.05	589.07
Bk. N. Abut.	17+18.20	5.63	589.05	589.07

GIRDER 5

Location	Station	Offset	Theoretical Grade Elevations	Theoretical Grade Elevations Adjusted For Dead Load Deflection and Grinding
Bk. S. Abut.	16+07.72	12.88	589.25	589.27
℄ Brg. S. Abut.	16+09.29	12.88	589.26	589.28
D	16+19.37	12.88	589.29	589.39
E	16+29.42	12.88	589.32	589.48
F	16+39.44	12.88	589.35	589.57
G	16+49.43	12.88	589.38	589.63
H	16+59.39	12.88	589.40	589.67
I	16+69.32	12.88	589.42	589.70
J	16+79.22	12.88	589.44	589.70
K	16+89.09	12.88	589.45	589.68
L	16+98.93	12.88	589.47	589.65
M	17+08.75	12.88	589.48	589.60
℄ Brg. N. Abut.	17+22.68	12.88	589.49	589.51
Bk. N. Abut.	17+24.19	12.88	589.49	589.51

GIRDER 6

Location	Station	Offset	Theoretical Grade Elevations	Theoretical Grade Elevations Adjusted For Dead Load Deflection and Grinding
Bk. S. Abut.	16+14.19	20.13	589.71	589.73
℄ Brg. S. Abut.	16+15.74	20.13	589.71	589.74
D	16+25.78	20.13	589.75	589.84
E	16+35.79	20.13	589.78	589.94
F	16+45.76	20.13	589.80	590.02
G	16+55.71	20.13	589.83	590.08
H	16+65.62	20.13	589.85	590.13
I	16+75.51	20.13	589.87	590.15
J	16+85.37	20.13	589.88	590.15
K	16+95.19	20.13	589.90	590.13
L	17+04.99	20.13	589.91	590.09
M	17+14.77	20.13	589.92	590.04
℄ Brg. N. Abut.	17+28.64	20.13	589.93	589.95
Bk. N. Abut.	17+30.15	20.13	589.93	589.95

℄ W. CURTAIN WALL

Location	Station	Offset	Theoretical Grade Elevations	Theoretical Grade Elevations Adjusted For Dead Load Deflection and Grinding
Bk. N. Abut.	16+99.53	-16.64	587.70	587.72
℄ Brg. N. Abut.	17+00.81	-16.65	587.70	587.72
N	17+10.64	-16.74	587.70	587.72
O	17+20.48	-16.79	587.71	587.73
P	17+30.32	-16.82	587.71	587.73
℄ Brg. N. Appr. Bent	17+35.25	-16.81	587.71	587.73
Bk. N. Appr. Bent	17+37.11	-16.81	587.71	587.74

GIRDER 1N

Location	Station	Offset	Theoretical Grade Elevations	Theoretical Grade Elevations Adjusted For Dead Load Deflection and Grinding
Bk. N. Abut.	17+06.12	-8.83	588.17	588.19
℄ Brg. N. Abut.	17+07.40	-8.84	588.17	588.19
N	17+17.21	-8.91	588.18	588.22
O	17+27.02	-8.94	588.18	588.23
P	17+36.83	-8.94	588.19	588.22
℄ Brg. N. Appr. Bent	17+41.75	-8.92	588.19	588.21
Bk. N. Appr. Bent	17+43.60	-8.92	588.19	588.21

GIRDER 2N

Location	Station	Offset	Theoretical Grade Elevations	Theoretical Grade Elevations Adjusted For Dead Load Deflection and Grinding
Bk. N. Abut.	17+12.16	-1.63	588.61	588.63
℄ Brg. N. Abut.	17+13.43	-1.63	588.61	588.63
N	17+23.22	-1.68	588.62	588.66
O	17+33.00	-1.69	588.62	588.67
P	17+42.79	-1.67	588.62	588.66
℄ Brg. N. Appr. Bent	17+47.70	-1.64	588.63	588.65
Bk. N. Appr. Bent	17+49.54	-1.63	588.63	588.65

℄ ROADWAY & P.G.L.

Location	Station	Offset	Theoretical Grade Elevations	Theoretical Grade Elevations Adjusted For Dead Load Deflection and Grinding
Bk. N. Abut.	17+13.52	0.00	588.71	588.73
℄ Brg. N. Abut.	17+14.79	0.00	588.71	588.73
N	17+24.61	0.00	588.72	588.76
O	17+34.39	0.00	588.72	588.77
P	17+44.15	0.00	588.72	588.75
℄ Brg. N. Appr. Bent	17+49.04	0.00	588.72	588.75
Bk. N. Appr. Bent	17+50.87	0.00	588.72	588.75

STAGE CONST. LINE

Location	Station	Offset	Theoretical Grade Elevations	Theoretical Grade Elevations Adjusted For Dead Load Deflection and Grinding
Bk. N. Abut.	17+14.35	1.00	588.77	588.79
℄ Brg. N. Abut.	17+15.63	1.00	588.77	588.79
N	17+25.43	1.00	588.78	588.82
O	17+35.21	1.00	588.78	588.83
P	17+44.97	1.00	588.78	588.81
℄ Brg. N. Appr. Bent	17+49.85	1.00	588.78	588.81
Bk. N. Appr. Bent	17+51.68	1.00	588.78	588.81

GIRDER 3N

Location	Station	Offset	Theoretical Grade Elevations	Theoretical Grade Elevations Adjusted For Dead Load Deflection and Grinding
Bk. N. Abut.	17+18.17	5.59	589.05	589.07
℄ Brg. N. Abut.	17+19.44	5.58	589.05	589.07
N	17+29.20	5.56	589.05	589.10
O	17+38.96	5.57	589.06	589.11
P	17+48.72	5.61	589.06	589.09
℄ Brg. N. Appr. Bent	17+53.62	5.65	589.06	589.09
Bk. N. Appr. Bent	17+55.46	5.66	589.06	589.08

GIRDER 4N

Location	Station	Offset	Theoretical Grade Elevations	Theoretical Grade Elevations Adjusted For Dead Load Deflection and Grinding
Bk. N. Abut.	17+24.15	12.82	589.49	589.51
℄ Brg. N. Abut.	17+25.41	12.82	589.49	589.51
N	17+35.15	12.81	589.49	589.53
O	17+44.88	12.84	589.50	589.54
P	17+54.62	12.90	589.50	589.53
℄ Brg. N. Appr. Bent	17+59.51	12.95	589.50	589.52
Bk. N. Appr. Bent	17+61.34	12.97	589.50	589.52

℄ E. CURTAIN WALL

Location	Station	Offset	Theoretical Grade Elevations	Theoretical Grade Elevations Adjusted For Dead Load Deflection and Grinding
Bk. N. Abut.	17+30.61	20.68	589.96	589.98
℄ Brg. N. Abut.	17+31.87	20.68	589.96	589.98
N	17+41.58	20.70	589.97	589.99
O	17+51.29	20.75	589.97	589.99
P	17+61.00	20.84	589.97	589.99
℄ Brg. N. Appr. Bent	17+65.87	20.89	589.97	590.00
Bk. N. Appr. Bent	17+67.70	20.91	589.98	590.00

WEST EDGE OF SHOULDER

Location	Station	Offset	Theoretical Grade Elevations	Theoretical Grade Elevations Adjusted For Grinding
S. End S. Appr. Slab	15+09.30	-18.00	586.94	586.96
A1	15+19.83	-18.00	587.00	587.02
A2	15+30.31	-18.00	587.06	587.08
N. End S. Appr. Slab	15+40.76	-18.00	587.11	587.13

WEST EDGE OF PAVEMENT

Location	Station	Offset	Theoretical Grade Elevations	Theoretical Grade Elevations Adjusted For Grinding
S. End S. Appr. Slab	15+15.09	-12.00	587.33	587.36
A1	15+25.58	-12.00	587.39	587.41
A2	15+36.02	-12.00	587.45	587.47
N. End S. Appr. Slab	15+46.43	-12.00	587.50	587.52

℄ ROADWAY & P.G.L.

Location	Station	Offset	Theoretical Grade Elevations	Theoretical Grade Elevations Adjusted For Grinding
S. End S. Appr. Slab	15+26.57	0.00	588.12	588.14
A1	15+36.97	0.00	588.17	588.19
A2	15+47.34	0.00	588.23	588.25
N. End S. Appr. Slab	15+57.66	0.00	588.28	588.30

STAGE CONST. LINE

Location	Station	Offset	Theoretical Grade Elevations	Theoretical Grade Elevations Adjusted For Grinding
S. End S. Appr. Slab	15+27.52	1.00	588.18	588.20
A1	15+37.92	1.00	588.24	588.26
A2	15+48.27	1.00	588.29	588.31
N. End S. Appr. Slab	15+58.59	1.00	588.34	588.36

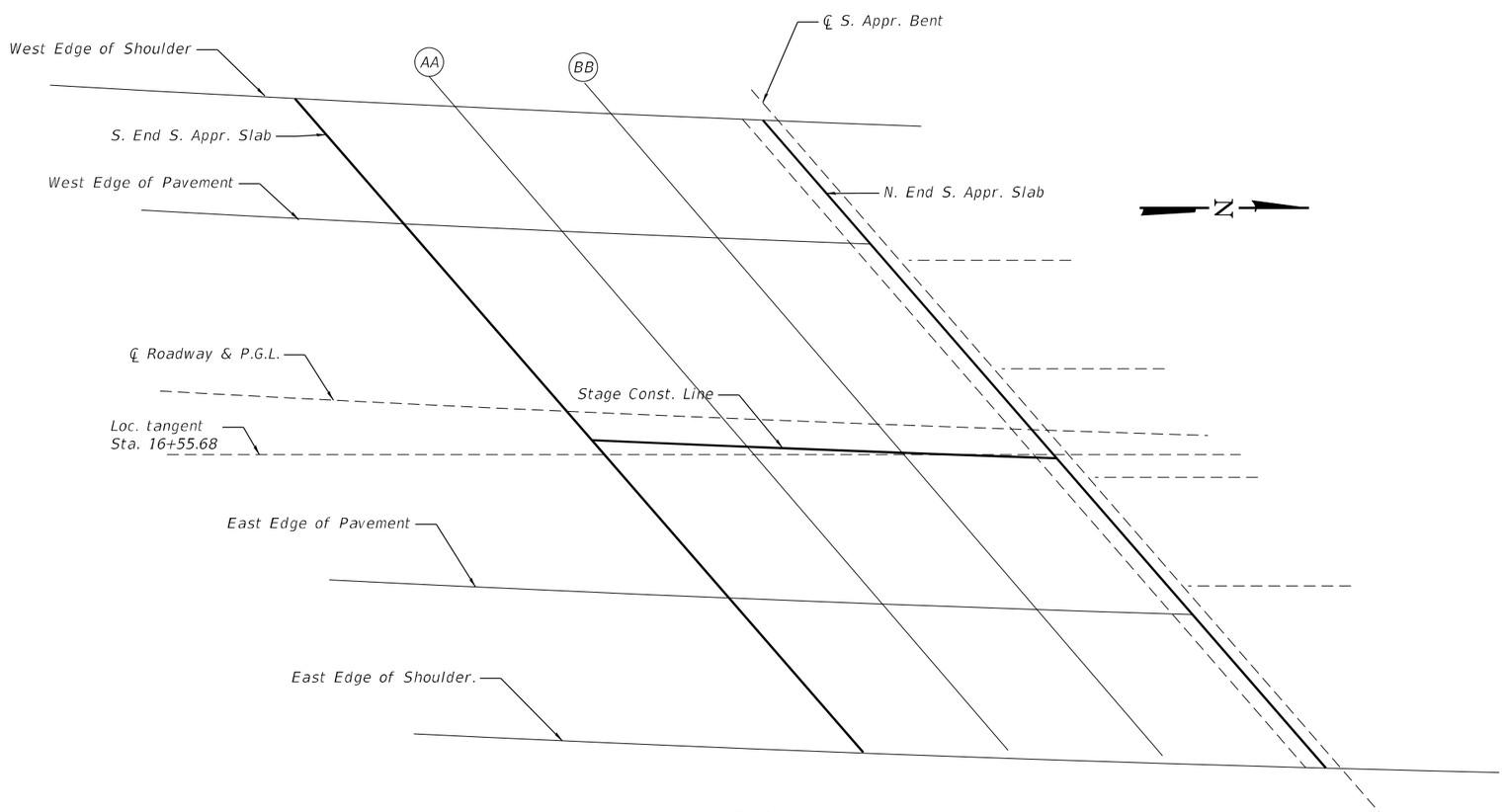

PLAN

Note:
Offsets to the left of ℄ I-155 are negative.
Offsets to the right of ℄ I-155 are positive.

EAST EDGE OF PAVEMENT

Location	Station	Offset	Theoretical Grade Elevations	Theoretical Grade Elevations Adjusted For Grinding
S. End S. Appr. Slab	15+37.92	12.00	588.90	588.92
A1	15+48.23	12.00	588.95	588.97
A2	15+58.52	12.00	589.00	589.02
N. End S. Appr. Slab	15+68.76	12.00	589.05	589.07

EAST EDGE OF SHOULDER

Location	Station	Offset	Theoretical Grade Elevations	Theoretical Grade Elevations Adjusted For Grinding
S. End S. Appr. Slab	15+47.26	22.00	589.55	589.57
A1	15+57.51	22.00	589.60	589.62
A2	15+67.73	22.00	589.64	589.66
N. End S. Appr. Slab	15+77.91	22.00	589.69	589.71

WEST EDGE OF SHOULDER

Location	Station	Offset	Theoretical Grade Elevations	Theoretical Grade Elevations Adjusted For Grinding
S. End N. Appr. Slab	17+35.47	-18.00	587.64	587.66
A3	17+45.29	-18.00	587.64	587.67
A4	17+55.08	-18.00	587.64	587.67
N. End N. Appr. Slab	17+64.84	-18.00	587.64	587.66

WEST EDGE OF PAVEMENT

Location	Station	Offset	Theoretical Grade Elevations	Theoretical Grade Elevations Adjusted For Grinding
S. End N. Appr. Slab	17+40.42	-12.00	588.00	588.02
A3	17+50.20	-12.00	588.00	588.03
A4	17+59.96	-12.00	588.00	588.02
N. End N. Appr. Slab	17+69.68	-12.00	588.00	588.02

℄ ROADWAY & P.G.L.

Location	Station	Offset	Theoretical Grade Elevations	Theoretical Grade Elevations Adjusted For Grinding
S. End N. Appr. Slab	17+50.23	0.00	588.72	588.75
A3	17+59.94	0.00	588.72	588.74
A4	17+69.63	0.00	588.72	588.74
N. End N. Appr. Slab	17+79.29	0.00	588.71	588.73

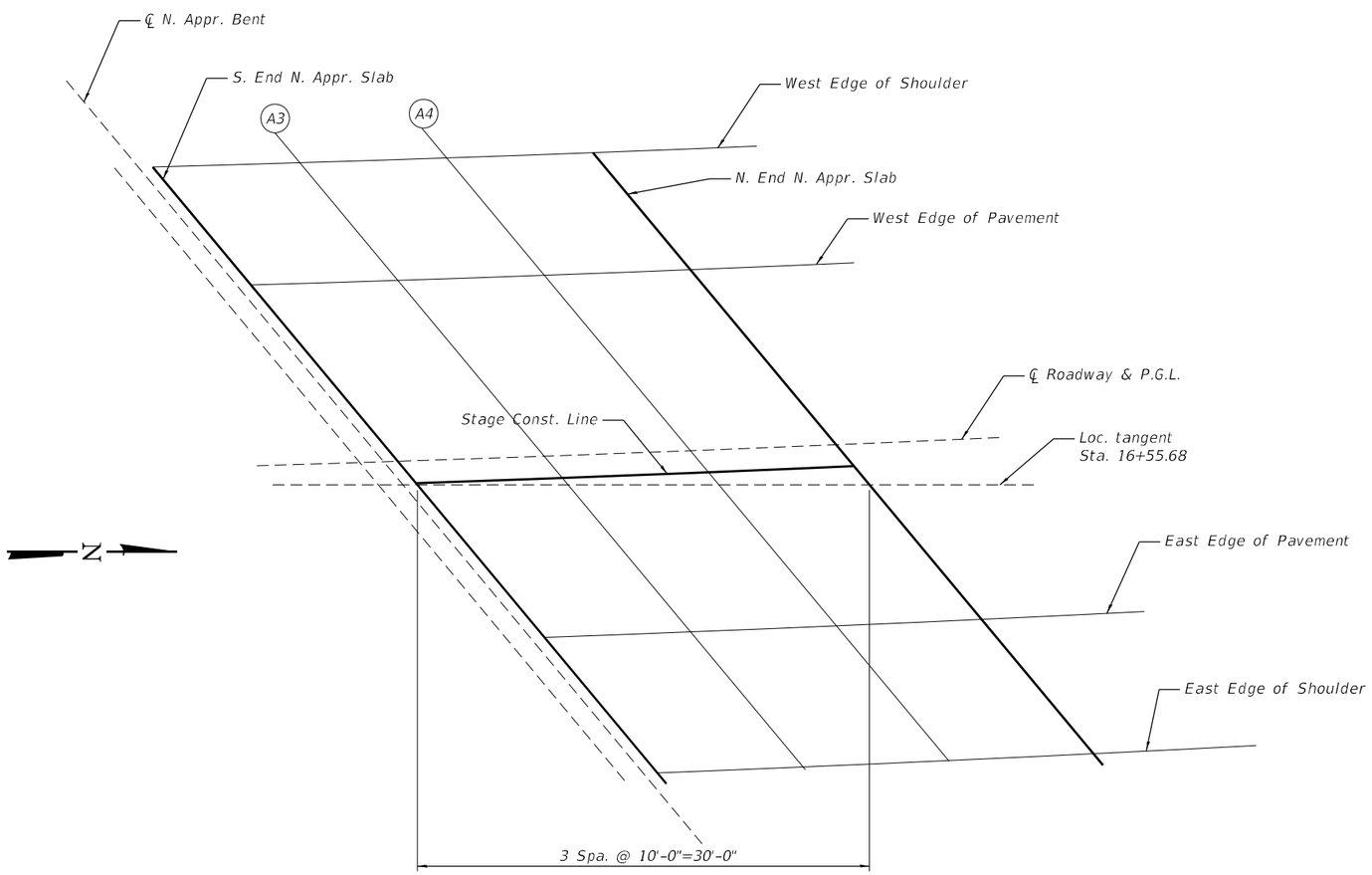

PLAN

Note:
Offsets to the left of ℄ I-155 are negative.
Offsets to the right of ℄ I-155 are positive.

STAGE CONST. LINE

Location	Station	Offset	Theoretical Grade Elevations	Theoretical Grade Elevations Adjusted For Grinding
S. End N. Appr. Slab	17+51.04	1.00	588.78	588.81
A3	17+60.75	1.00	588.78	588.80
A4	17+70.43	1.00	588.78	588.80
N. End N. Appr. Slab	17+80.09	1.00	588.77	588.79

EAST EDGE OF PAVEMENT

Location	Station	Offset	Theoretical Grade Elevations	Theoretical Grade Elevations Adjusted For Grinding
S. End N. Appr. Slab	17+59.93	12.00	589.44	589.46
A3	17+69.57	12.00	589.44	589.46
A4	17+79.20	12.00	589.43	589.45
N. End N. Appr. Slab	17+88.79	12.00	589.43	589.45

EAST EDGE OF SHOULDER

Location	Station	Offset	Theoretical Grade Elevations	Theoretical Grade Elevations Adjusted For Grinding
S. End N. Appr. Slab	17+67.93	22.00	590.04	590.06
A3	17+77.52	22.00	590.03	590.06
A4	17+87.09	22.00	590.03	590.05
N. End N. Appr. Slab	17+96.63	22.00	590.02	590.04

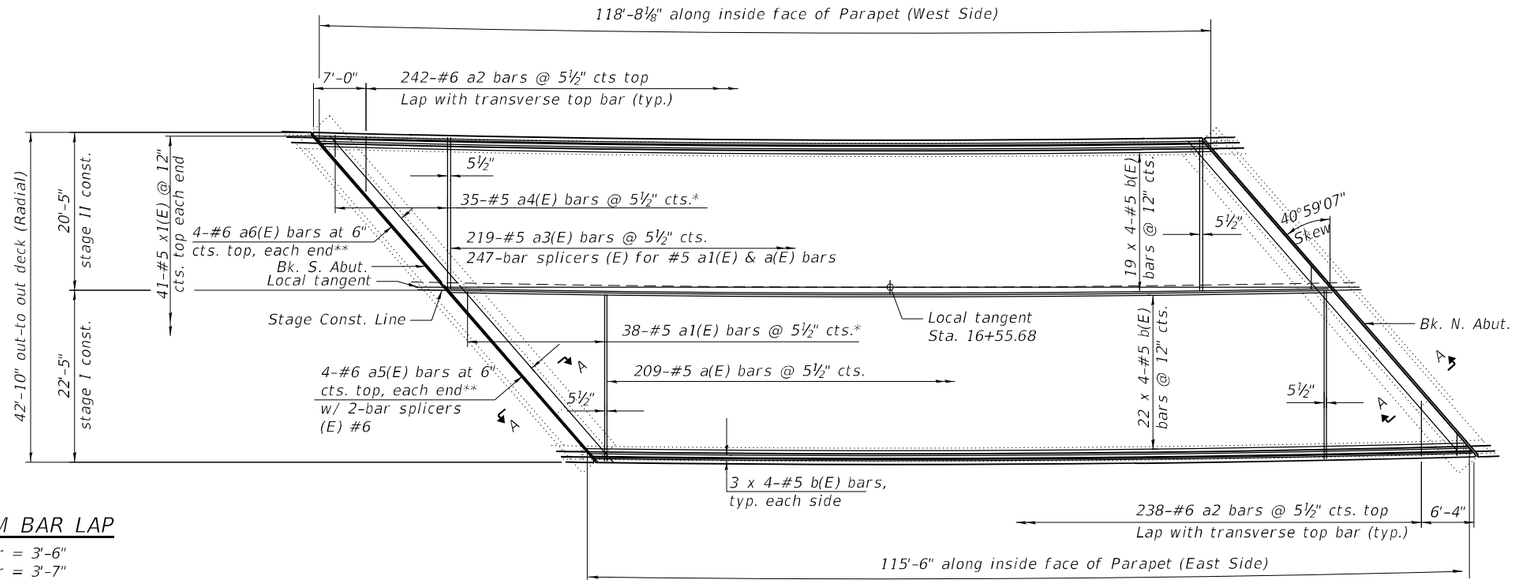

MINIMUM BAR LAP

#5 bar = 3'-6"
#6 bar = 3'-7"

* Order bars full length to fit skew and use remainder on the other side cut to fit. See field cutting diagram.

** Cut to fit

TOP REINFORCING PLAN

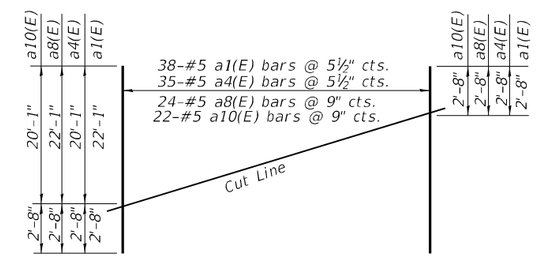

FIELD CUTTING DIAGRAM FOR SLAB (MAIN SPAN)

* Order a1(E) and a8(E) 25'-9" and a4(E) and a10(E) 21'-9", Cut as shown and use remainder of bars on the otherside (end) of deck.

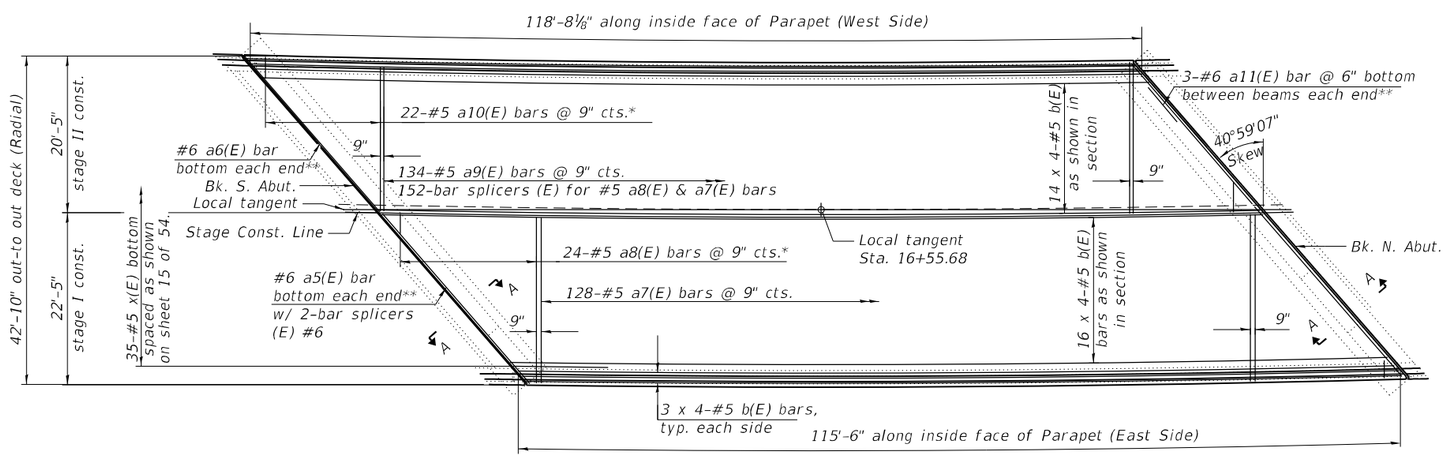

BOTTOM REINFORCING PLAN

Notes:
See sheet 15 of 54 for Section A-A.
See sheet 14 of 54 for superstructure details and Bill of Material.
See sheet 13 of 54 for superstructure cross section.
Bars indicated thus 20 x 3-#5 etc. indicates 20 lines of bars with 3 lengths per line.
See sheet 37 of 54 for details of bar splicers and mechanical splicers.
The spacing of transverse bars is measured along the local tangent.

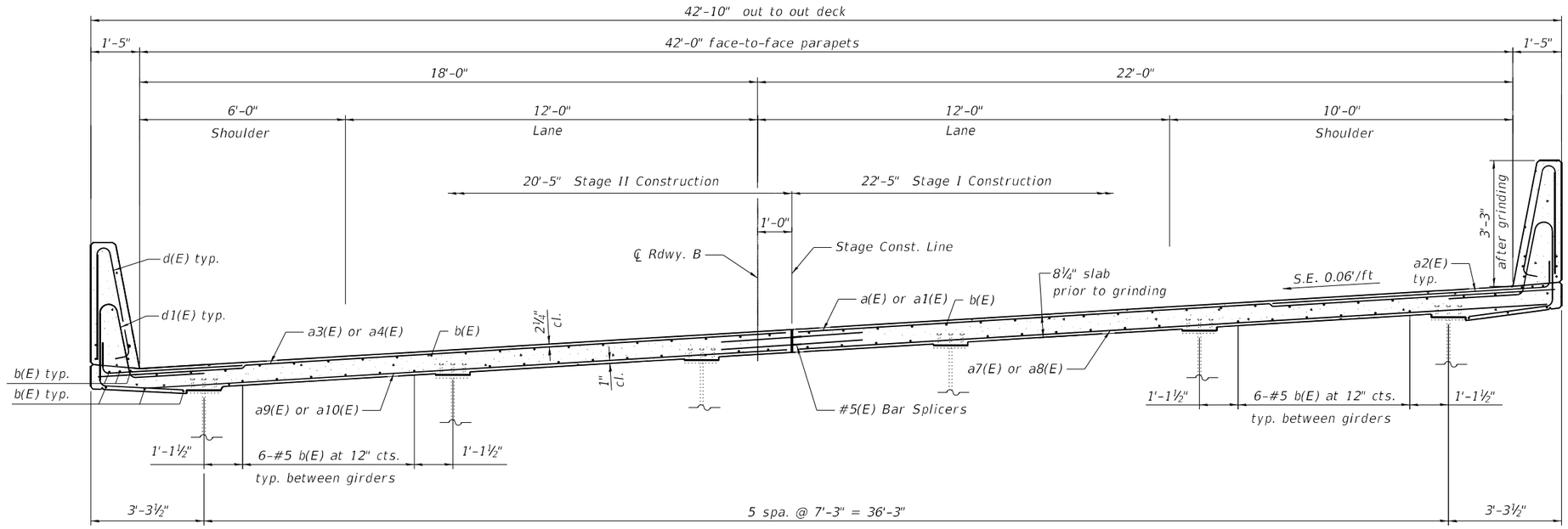

TYPICAL CROSS SECTION (MAIN SPAN)

(Looking North)

MODEL: Default
FILE NAME: P:\Transportation\4854 - IDOT PTB 198-023 D60WOA\CADD 50\054-0050-72220-013-Superstructure - Cross sections.dgn

CDI CIVIL DESIGN, INC. WBE / DBE EFFINGHAM, IL LICENSE #184.003222	USER NAME = $USER$	DESIGNED -	REVISED -	STATE OF ILLINOIS DEPARTMENT OF TRANSPORTATION	SUPERSTRUCTURE CROSS SECTION STRUCTURE NO. 054-0050	F.A.I. RTE.	SECTION	COUNTY	TOTAL SHEETS / SHEET NO.
		DRAWN -	REVISED -			155	(54-4HB)D	LOGAN	133 / 47
	PLOT SCALE = $SCALE$	CHECKED -	REVISED -					CONTRACT NO. 72220	
	PLOT DATE = 12/19/2024	DATE -	REVISED -		SCALE: SHEET 13 OF 63 SHEETS STA. TO STA.		ILLINOIS	FED. AID PROJECT	

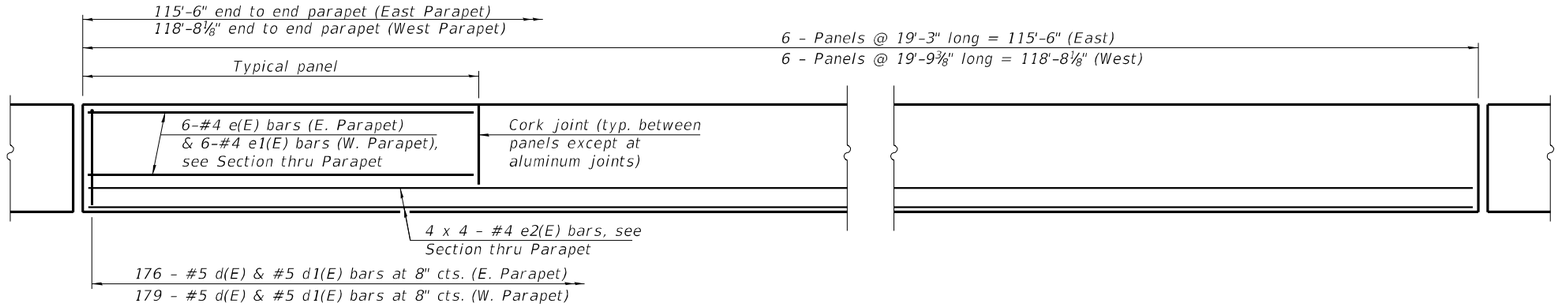

INSIDE ELEVATION OF PARAPET

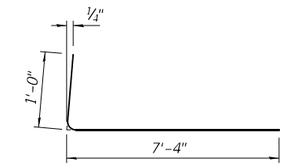

BAR a2(E)

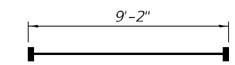

BAR a11(E)
(Headed)

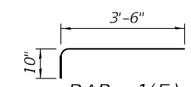

BAR x1(E)

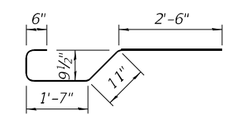

BAR x(E)

MINIMUM BAR LAP
#4 bar = 2'-5"

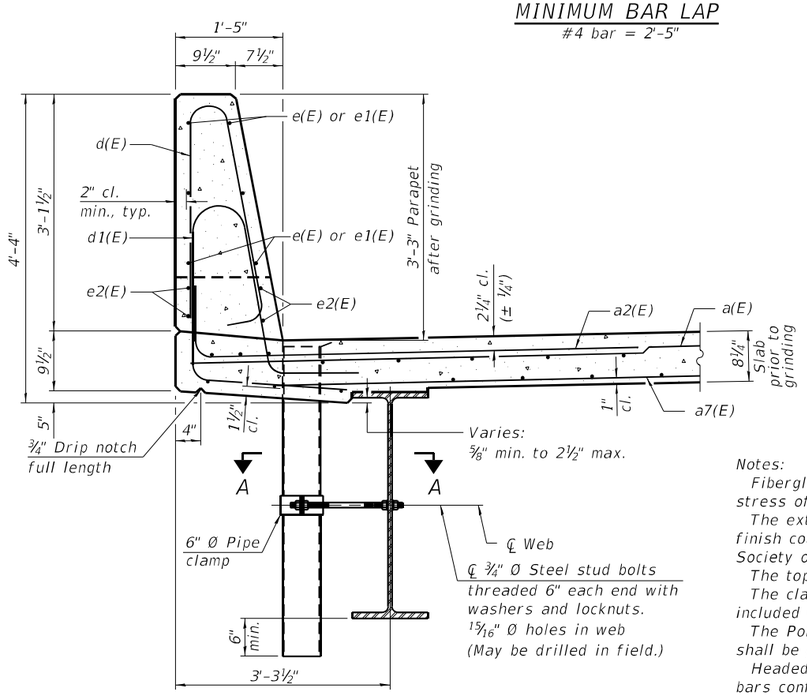

SECTION THRU PARAPET

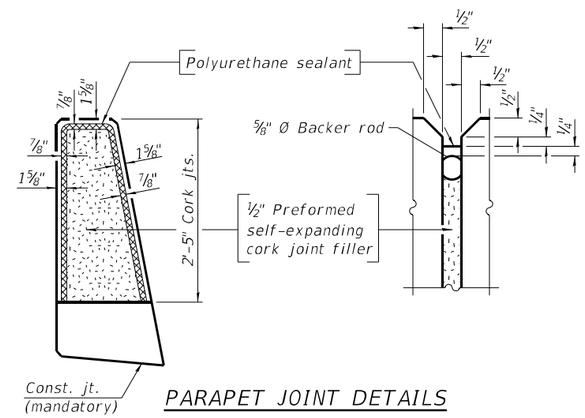

PARAPET JOINT DETAILS

Notes:

Fiberglass pipe shall conform to ASTM D2996, with short-time rupture strength hoop tensile stress of 30,000 p.s.i. minimum.

The exterior surfaces of the floor drains shall be painted according to Article 506 with the finish coat as specified. The exterior surfaces of the drains shall be cleaned according to the Society of Protective Coating's Spec. SSPC-SP1 prior to painting.

The top portion of aluminum floor drains shall be coated to minimize reaction with wet concrete.

The clamping device shall be galvanized according to AASHTO M 232. Cost of clamping device included with Floor Drains.

The Polyurethane Sealant shall be according to Article 1050.04 of the Std. Spec. and the color shall be gray.

Headed bars shall conform to ASTM A970 with threaded attachment; Class HA; and reinforcement bars conforming to ASTM A706. Cost included with Reinforcement Bars, Epoxy Coated.

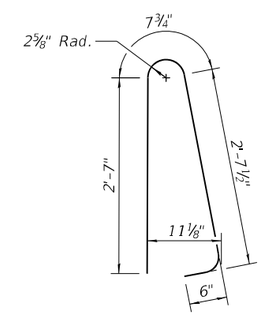

BAR d(E)

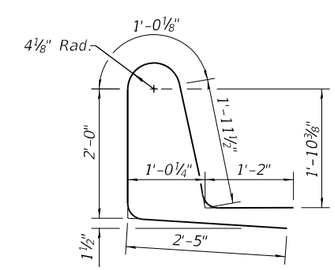

BAR d1(E)

SUPERSTRUCTURE
BILL OF MATERIAL

Bar	No.	Size	Length	Shape
a(E)	209	#5	22'-1"	
a1(E)	38	#5	24'-9"	
a2(E)	480	#6	8'-4"	
a3(E)	219	#5	20'-1"	
a4(E)	35	#5	22'-9"	
a5(E)	10	#6	29'-6"	
a6(E)	10	#6	26'-10"	
b(E)	332	#5	32'-3"	
a7(E)	128	#5	22'-1"	
a8(E)	254	#5	22'-9"	
a9(E)	134	#5	20'-1"	
a10(E)	22	#5	22'-9"	
a11(E)	30	#6	9'-2"	
d(E)	355	#5	6'-5"	
d1(E)	355	#5	8'-7"	
e(E)	36	#4	18'-11"	
e1(E)	36	#4	19'-6"	
e2(E)	32	#4	31'-5"	
x(E)	35	#5	6'-4"	
x1(E)	41	#5	4'-4"	
Reinforcement Bars, Epoxy Coated			Lbs.	49,520
Concrete Superstructure			Cu. Yd.	158.5

Bars indicated thus 1 x 2-#4 etc. indicates one line of bars with 2 lengths per line.

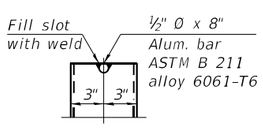

ALUMINUM
TUBE

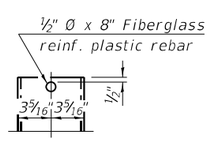

FIBERGLASS
PIPE

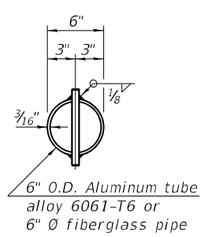

TOP PLAN
(Showing aluminum tube)

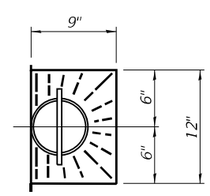

TOP PLAN

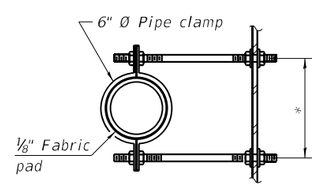

SECTION A-A
*Dimension as required by pipe clamp

SDE-SB-1 1-1-2020

MODEL: Default
FILE NAME: P:\Transportation\4854 - IDOT PTB 198-023 D600W04\CADD-50054-0050-72220-014-Superstructure Details.dgn

CIVIL DESIGN, INC.
WBE / DBE
EFFINGHAM, IL
LICENSE #184.003222

USER NAME = $USER$	DESIGNED -	REVISED -
	DRAWN -	REVISED -
PLOT SCALE = $SCALE$	CHECKED -	REVISED -
PLOT DATE = 12/19/2024	DATE -	REVISED -

STATE OF ILLINOIS
DEPARTMENT OF TRANSPORTATION

SUPERSTRUCTURE DETAILS
STRUCTURE NO. 054-0050

SCALE: SHEET 14 OF 63 SHEETS STA. TO STA.

F.A.I. RTE.	SECTION	COUNTY	TOTAL SHEETS	SHEET NO.
155	(54-4HB)D	LOGAN	133	48
		CONTRACT NO. 72220		
		ILLINOIS	FED. AID PROJECT	

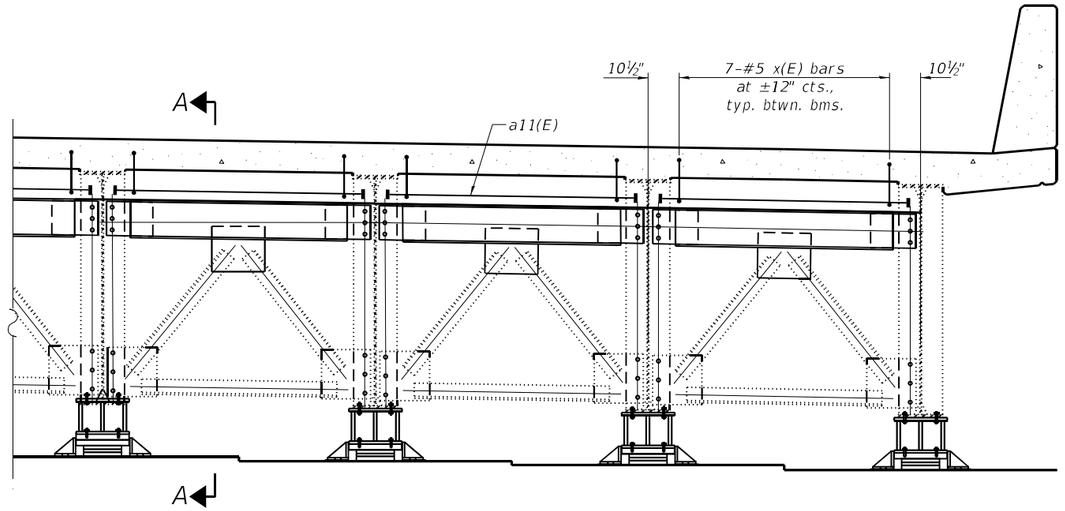

DIAPHRAGM AT WEST ABUTMENT

(Looking South)
(North Abutment Similar)

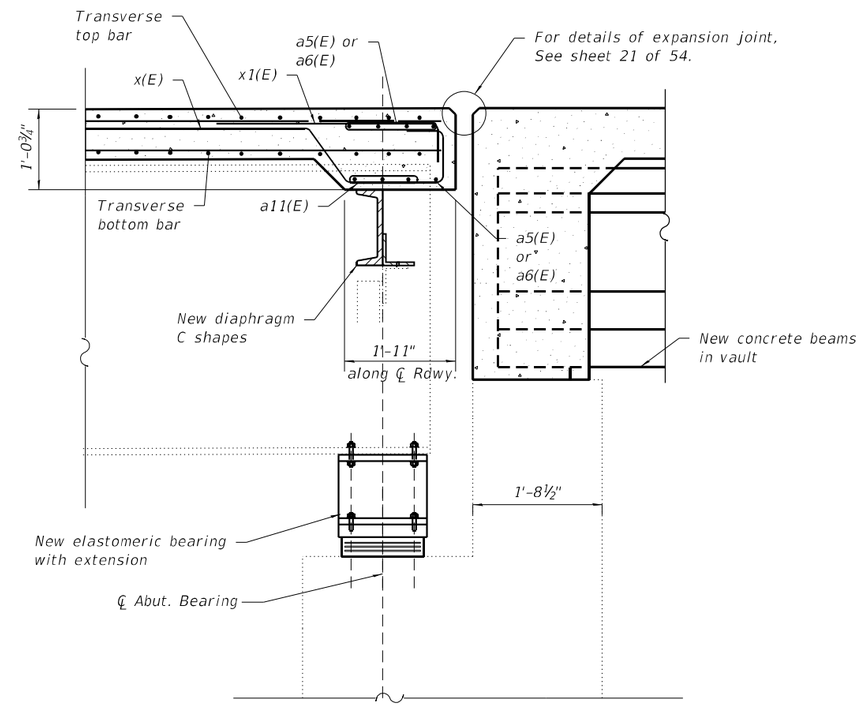

SECTION A-A

(Full cross frame not shown for clarity)

Notes:
See sheet 14 of 54 for superstructure details and Bill of Material.
The x(E) and x1(E) bars shall be placed parallel to the beams.
Spacing for these bars shall be at right angles to the beams.

INTERIOR BEAM MOMENT TABLE

		0.5 Main Span
I	in^4	43862
I'	in^4	108932
Sb	in^3	1746
Sb'	in^3	2312
St	in^3	1173
St'	in^3	7078
DL	k/'	1.01
MDL	' k	1584
SDL	k/'	0.36
MsDL	' k	324
MLL	' k	1289
MI	' k	269

INTERIOR BEAM REACTION TABLE

		Abut./Bent
R DL	k	113.7
Rs DL	k	11.3
R LL	k	51.8
R I	k	10.8
R Total	k	187.5

DEA-SB≥40-LR<45 1-1-2020

MODEL: Default
FILE NAME: P:\Transportation\4854 - IDOT PPB 198-023 D60WOA\CADD 50\054-0050-72220-015-2\bphmagm Detail&.dgn

CIVIL DESIGN,INC.
WBE / DBE
EFFINGHAM, IL
LICENSE #184.003222

USER NAME = $USER$	DESIGNED -	REVISED -
	DRAWN -	REVISED -
PLOT SCALE = $SCALE$	CHECKED -	REVISED -
PLOT DATE = 12/19/2024	DATE -	REVISED -

STATE OF ILLINOIS
DEPARTMENT OF TRANSPORTATION

DIAPHRAGM DETAILS
STRUCTURE NO. 054-0050

SCALE: SHEET 15 OF 63 SHEETS STA. TO STA.

F.A.I. RTE.	SECTION	COUNTY	TOTAL SHEETS	SHEET NO.
155	(54-4HB)D	LOGAN	133	49
		CONTRACT NO. 72220		
	ILLINOIS	FED. AID PROJECT		

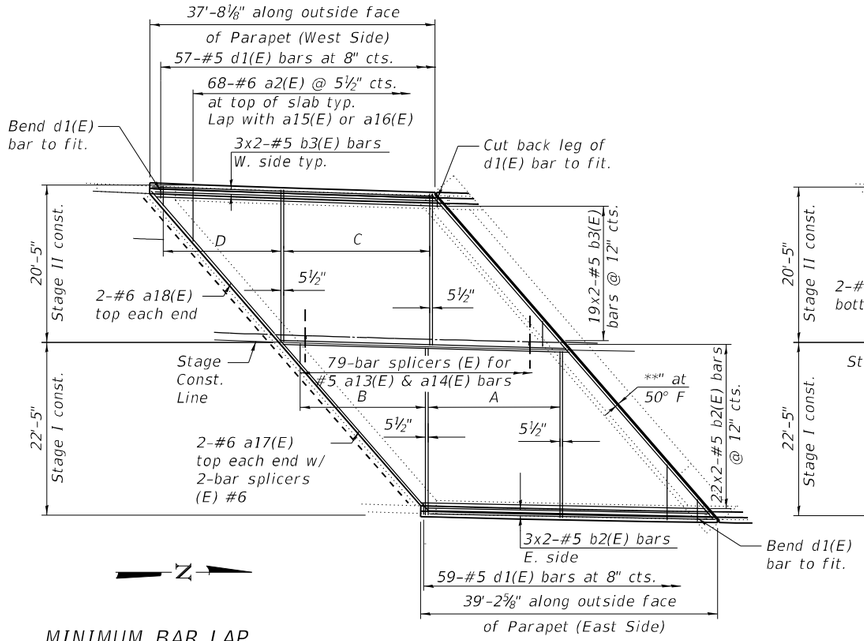

MINIMUM BAR LAP

#4 bar = 2'-5"
#5 bar = 3'-6"

A - 41-#5 a13(E) bars @ 5½" cts.
B - 38-#5 a14(E) bars @ 5½" cts.***
C - 45-#5 a15(E) bars @ 5½" cts.
D - 35-#5 a16(E) bars @ 5½" cts.***

PLAN TOP REINFORCING

** Dimension showing concrete opening.
For joint opening see sheet 21 of 38.
*** See Field Cutting Diagram.

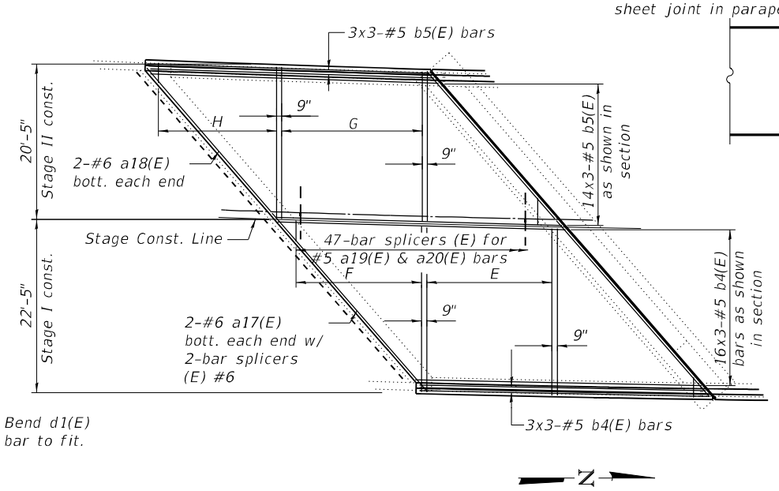

E - 23-#5 a19(E) bars @ 9" cts.
F - 24-#5 a20(E) bars @ 9" cts. ***
G - 25-#5 a21(E) bars @ 9" cts.
H - 21-#5 a22(E) bars @ 9" cts. ***

PLAN BOTTOM REINFORCING

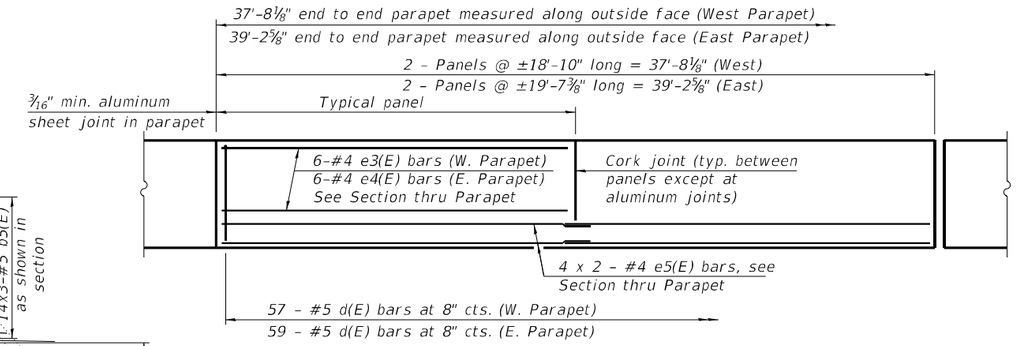

INSIDE ELEVATION OF PARAPET

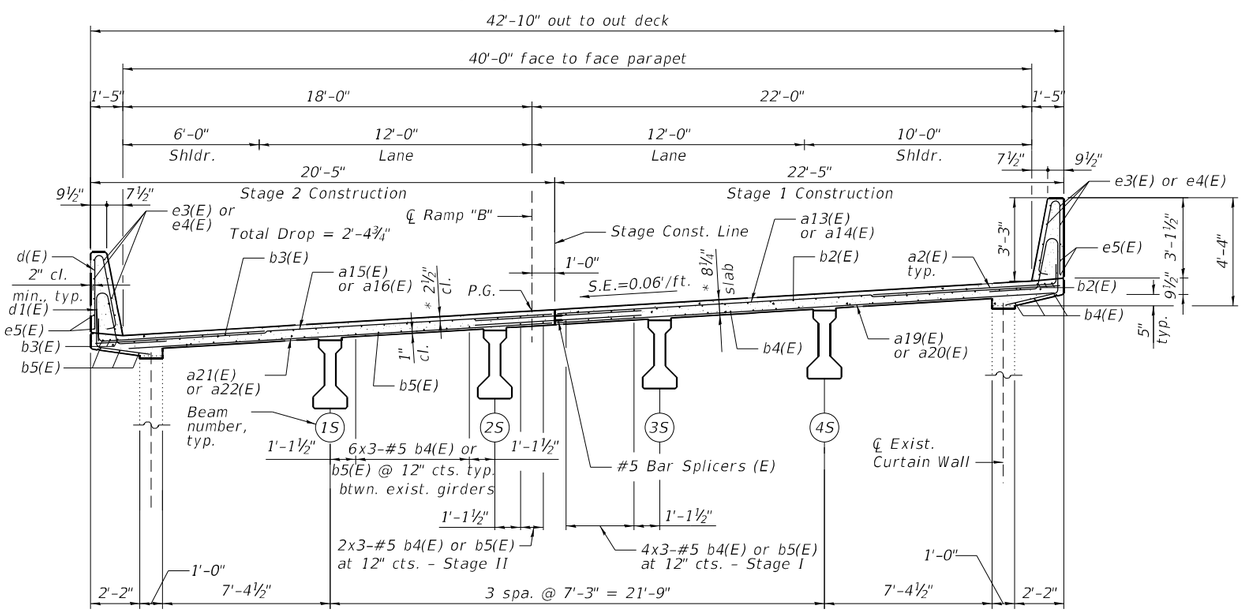

CROSS SECTION (S. VAULT)

Looking North
* Prior to grinding

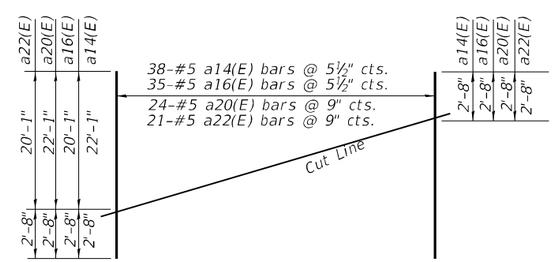

FIELD CUTTING DIAGRAM

Order a14(E), a16(E), a20(E) and a22(E) bars full length. Cut as shown and use remainder of bars on the other end of deck.

VAULTED SPAN (S) BILL OF MATERIAL

Bar	No.	Size	Length	Shape
a2(E)	136	#6	8'-4"	
a13(E)	41	#5	22'-1"	
a14(E)	38	#5	24'-9"	
a15(E)	45	#5	20'-1"	
a16(E)	35	#5	22'-9"	
a17(E)	4	#6	29'-4"	
a18(E)	4	#6	26'-8"	
a19(E)	23	#5	22'-1"	
a20(E)	24	#5	24'-9"	
a21(E)	25	#5	20'-1"	
a22(E)	21	#5	22'-9"	
b2(E)	50	#5	21'-2"	
b3(E)	44	#5	20'-10"	
b4(E)	57	#5	15'-4"	
b5(E)	51	#5	15'-0"	
d(E)	116	#5	6'-5"	
d1(E)	116	#5	8'-7"	
e3(E)	24	#4	18'-6"	
e4(E)	24	#4	19'-3"	
e5(E)	16	#4	20'-7"	
Concrete Superstructure			Cu. Yd.	51.9
Reinforcement Bars, Epoxy Coated			Pound	14,760

See sheet 14 of 38 for bar bending details. Bars indicated thus 1 x 2-#4 etc. indicates one line of bars with 2 lengths per line.

MODEL: Default
FILE NAME: P:\transportation\4854 - IDOT PTB 198-023 06(WVA)\CADD_50\054-0050-72220-016-Superstructure - South Vault Reinforcement.dgn

CDI
CIVIL DESIGN, INC.
WBE / DBE
EFFINGHAM, IL
LICENSE #184.003222

USER NAME = $USER$	DESIGNED - RT	REVISED -	
	DRAWN - DS	REVISED -	
PLOT SCALE = $SCALE$	CHECKED - JS	REVISED -	
PLOT DATE = 3/27/2025	DATE - 3/2025	REVISED -	

STATE OF ILLINOIS
DEPARTMENT OF TRANSPORTATION

SUPERSTRUCTURE SOUTH VAULT
STRUCTURE NO. 054-0050

SCALE: | SHEET 16 OF 38 SHEETS | STA. | TO STA.

F.A.I. RTE.	SECTION	COUNTY	TOTAL SHEETS	SHEET NO.
155	(54-4HB)D	LOGAN	133	50
		CONTRACT NO. 72220		
		ILLINOIS	FED. AID PROJECT	

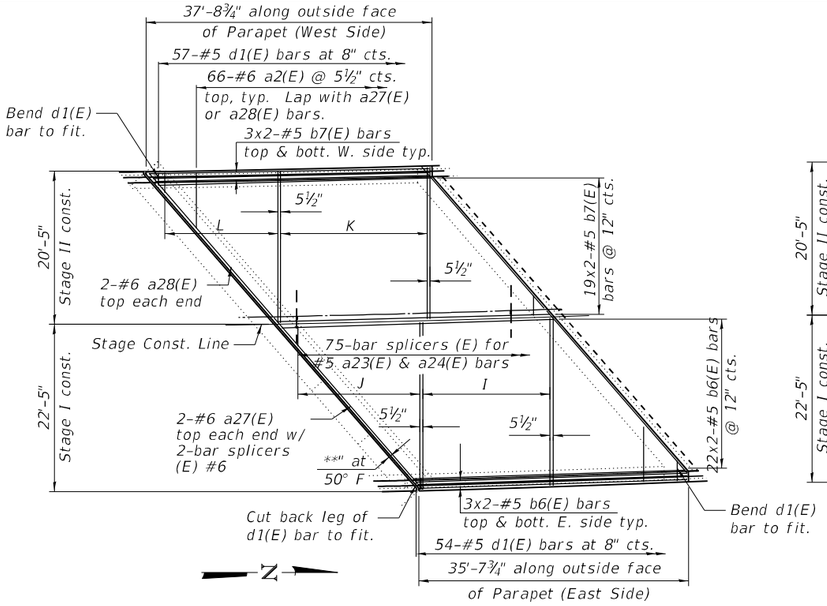

MINIMUM BAR LAP

#4 bar = 2'-5"
#5 bar = 3'-6"

I - 37-#5 a23(E) bars @ 5½" cts.
J - 38-#5 a24(E) bars @ 5½" cts. ***
K - 41-#5 a25(E) bars @ 5½" cts.
L - 35-#5 a26(E) bars @ 5½" cts. ***

PLAN TOP REINFORCING

** Dimension showing concrete opening. For joint opening see sheet 21 of 38.
*** See Field Cutting Diagram.

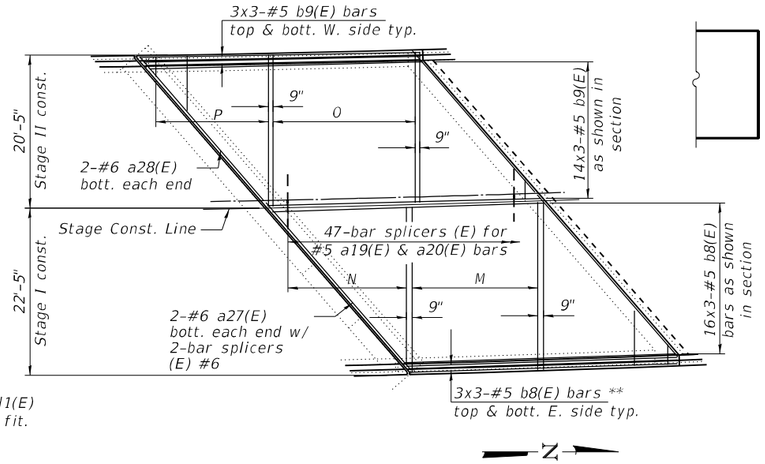

M - 23-#5 a29(E) bars @ 9" cts.
N - 24-#5 a30(E) bars @ 9" cts. ***
O - 26-#5 a31(E) bars @ 9" cts.
P - 21-#5 a32(E) bars @ 9" cts. ***

PLAN BOTTOM REINFORCING

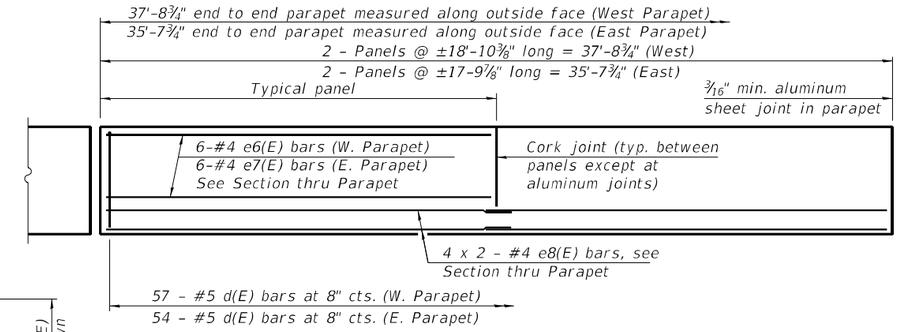

INSIDE ELEVATION OF PARAPET

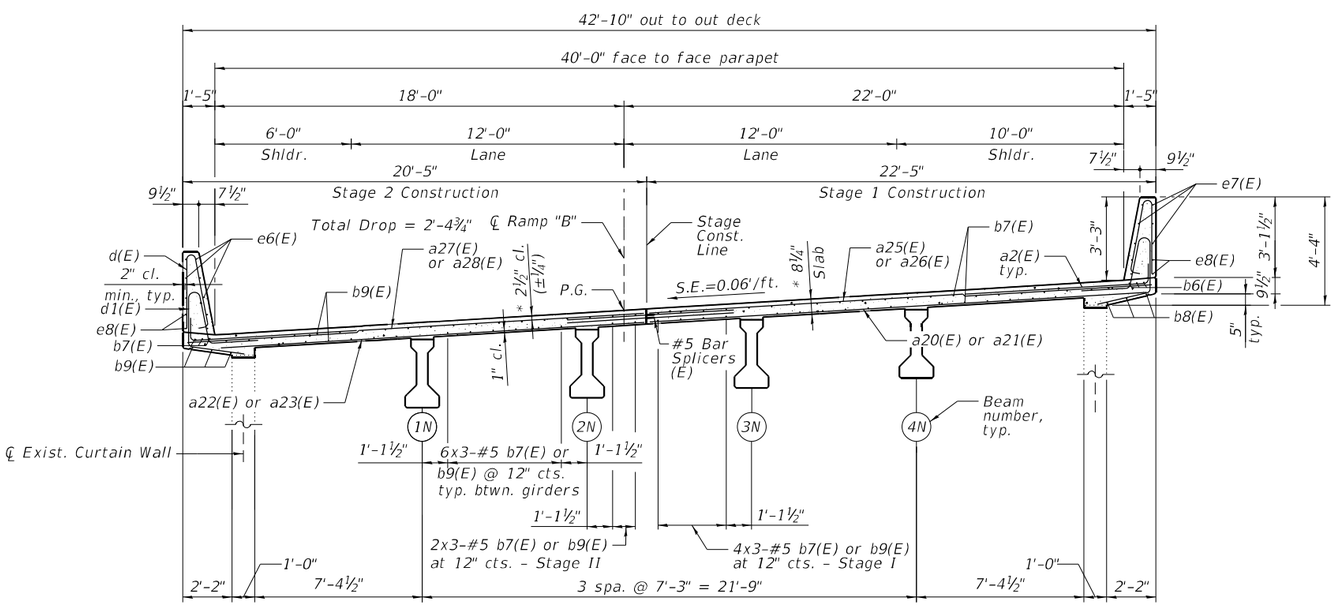

CROSS SECTION (N. VAULT)

Looking North
* Prior to grinding

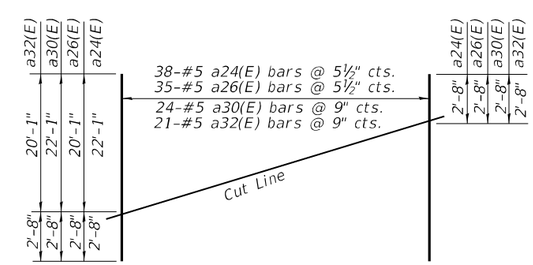

FIELD CUTTING DIAGRAM

Order a24(E), a26(E), a30(E) and a32(E) full length. Cut as shown and use remainder of bars on the other end of deck.

VAULTED SPAN (N) BILL OF MATERIAL

Bar	No.	Size	Length	Shape
a2(E)	132	#6	8'-4"	
a23(E)	37	#5	22'-1"	
a24(E)	38	#5	24'-9"	
a25(E)	41	#5	20'-1"	
a26(E)	35	#5	22'-9"	
a27(E)	4	#6	29'-4"	
a28(E)	4	#6	26'-8""	
a29(E)	23	#5	22'-1"	
a30(E)	24	#5	24'-9"	
a31(E)	26	#5	20'-1"	
a32(E)	21	#5	22'-9"	
b6(E)	12	#5	19'-10"	
b7(E)	76	#5	19'-10"	
b8(E)	12	#5	21'-10"	
b9(E)	19	#5	21'-10"	
d(E)	111	#5	6'-5"	
d1(E)	111	#5	8'-7"	
e6(E)	12	#4	18'-4"	
e7(E)	12	#4	17'-6"	
e8(E)	8	#4	19'-11"	
Concrete Superstructure			Cu. Yd.	50.0
Reinforcement Bars, Epoxy Coated			Pound	12,540

See sheet 14 of 38 for bar bending details. Bars indicated thus 1 x 2-#4 etc. indicates one line of bars with 2 lengths per line.

MODEL: Default
FILE NAME: P:\Transportation\454 - IDOT PTB 198-023 D60WOA\CADD 50\054-0050-72220-017-Superstructure - North Vault Reinforcement.dgn

CDI
CIVIL DESIGN, INC.
WBE / DBE
EFFINGHAM, IL
LICENSE #184.003222

USER NAME = $USER$	DESIGNED - RT	REVISED -
	DRAWN - DS	REVISED -
PLOT SCALE = $SCALE$	CHECKED - JS	REVISED -
PLOT DATE = 3/27/2025	DATE - 3/2025	REVISED -

STATE OF ILLINOIS
DEPARTMENT OF TRANSPORTATION

SUPERSTRUCTURE NORTH VAULT
STRUCTURE NO. 054-0050

SCALE: | SHEET 17 OF 38 SHEETS | STA. | TO STA.

F.A.I. RTE.	SECTION	COUNTY	TOTAL SHEETS	SHEET NO.
155	(54-4HB)D	LOGAN	133	51
		CONTRACT NO. 72220		
		ILLINOIS	FED. AID PROJECT	

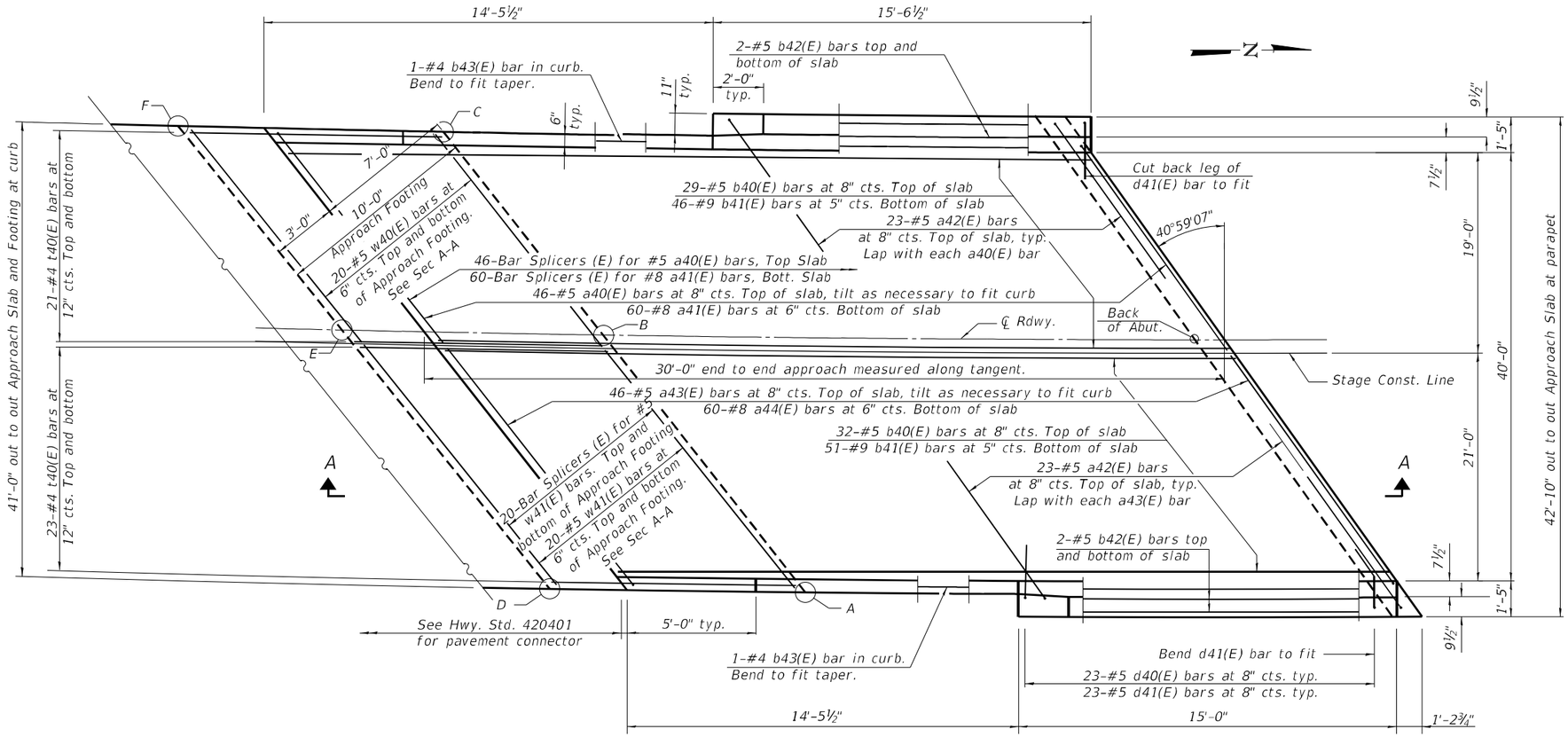

PLAN

TOP AND BOTTOM ELEVATIONS FOR APPROACH FOOTING

Point/ Location	Station	Offset	Top	Bottom
A	15+56.78	22.50	588.38	587.55
B	15+36.21	0.00	586.93	586.10
C	15+18.57	-18.50	585.72	584.89
D	15+43.64	22.50	588.31	587.48
E	15+22.42	0.00	586.85	586.02
F	15+04.62	-18.50	585.64	584.81

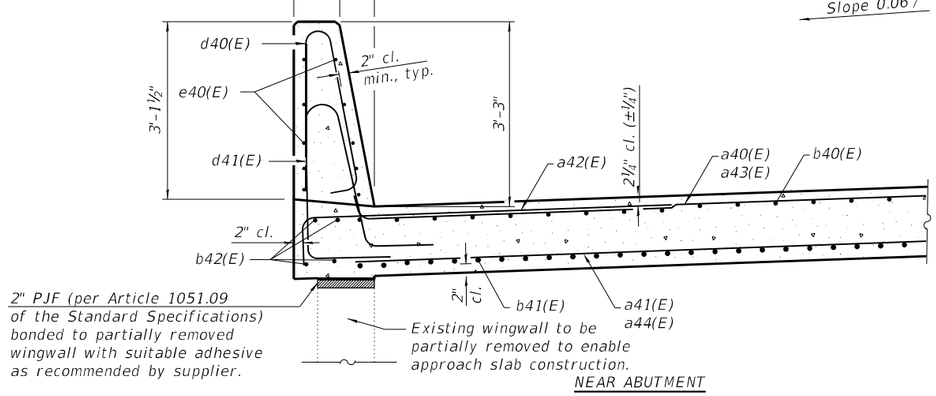

NEAR ABUTMENT

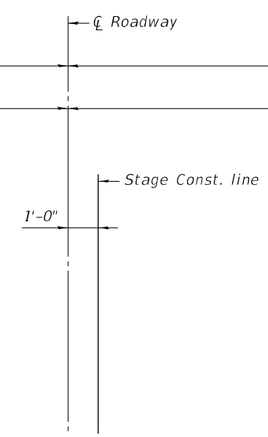

CROSS SECTION

(Looking North)

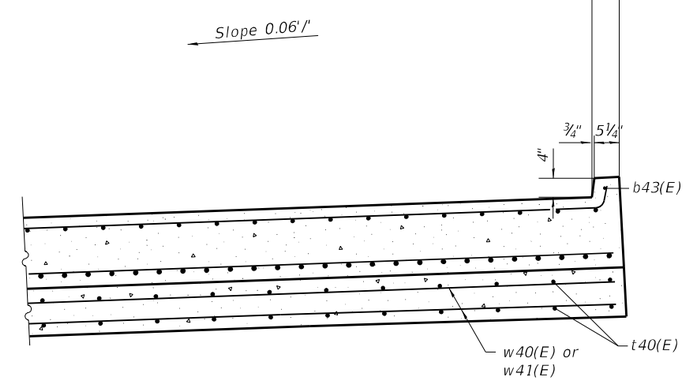

AT APPROACH FOOTING

BAIA-CIP-39CS-R(>30°) 2-1-2023

(Sheet 1 of 3)

MODEL: Default
FILE NAME: P:\Transportation\4854 - IDOT PTB 198-023 D600W04\CADD-50054-0050-72220-418-S Approach Slab Details.dgn

CIVIL DESIGN, INC.
WBE / DBE
EFFINGHAM, IL
LICENSE #184.003222

USER NAME = $USER$	DESIGNED -	REVISED -
	DRAWN -	REVISED -
PLOT SCALE = $SCALE$	CHECKED -	REVISED -
PLOT DATE = 12/19/2024	DATE -	REVISED -

STATE OF ILLINOIS
DEPARTMENT OF TRANSPORTATION

SOUTH BRIDGE APPROACH SLAB DETAILS
STRUCTURE NO. 054-0050

SCALE: | SHEET 18 OF 63 SHEETS | STA. | TO STA.

F.A.I. RTE.	SECTION	COUNTY	TOTAL SHEETS	SHEET NO.
155	(54-4HB)D	LOGAN	133	52
		CONTRACT NO. 72220		
	ILLINOIS	FED. AID PROJECT		

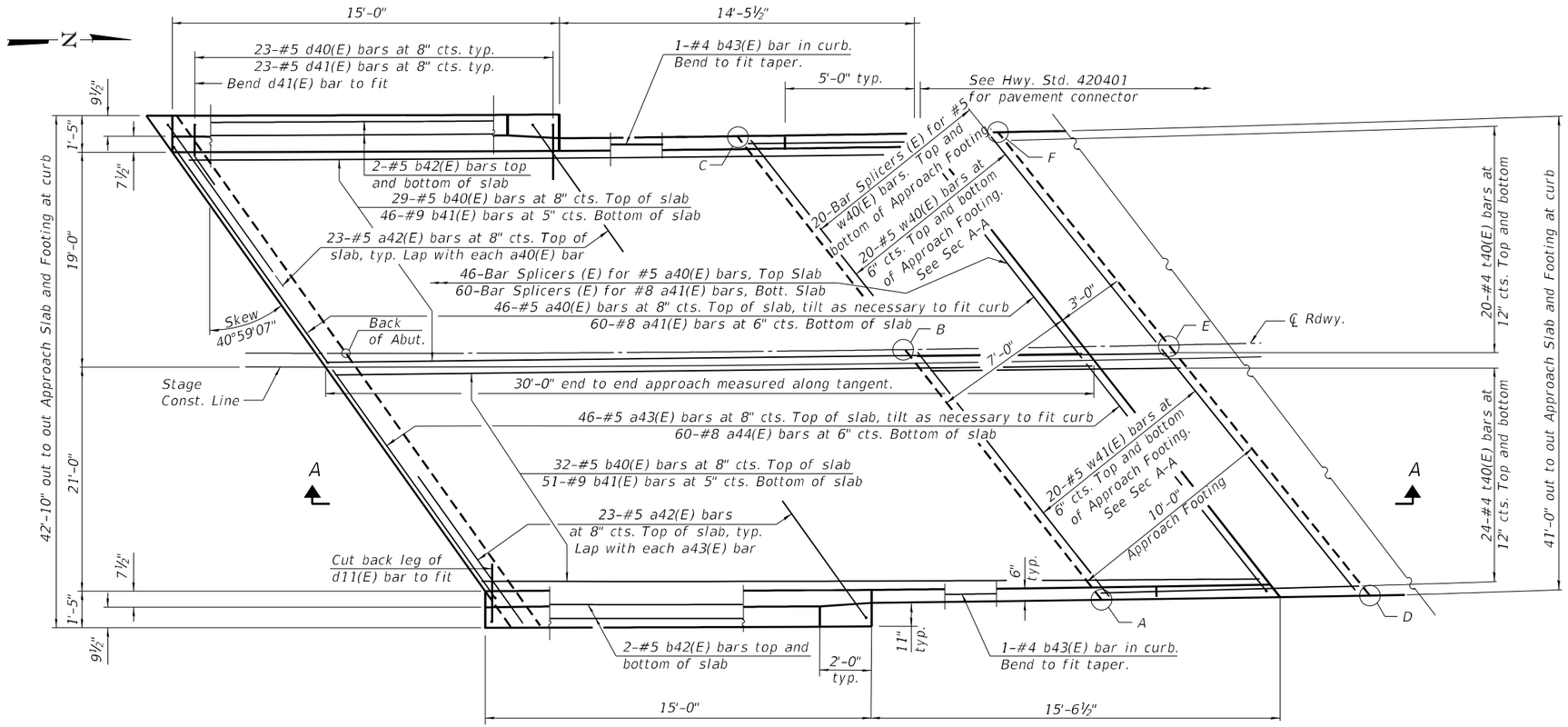

PLAN

TOP AND BOTTOM ELEVATIONS FOR APPROACH FOOTING

Point/ Location	Station	Offset	Top	Bottom
A	17+88.17	22.50	588.81	587.98
B	17+70.33	0.00	587.47	586.64
C	17+55.38	-18.50	586.36	585.53
D	18+00.80	22.50	588.79	587.96
E	17+83.12	0.00	587.46	586.63
F	17+68.31	-18.50	586.36	585.53

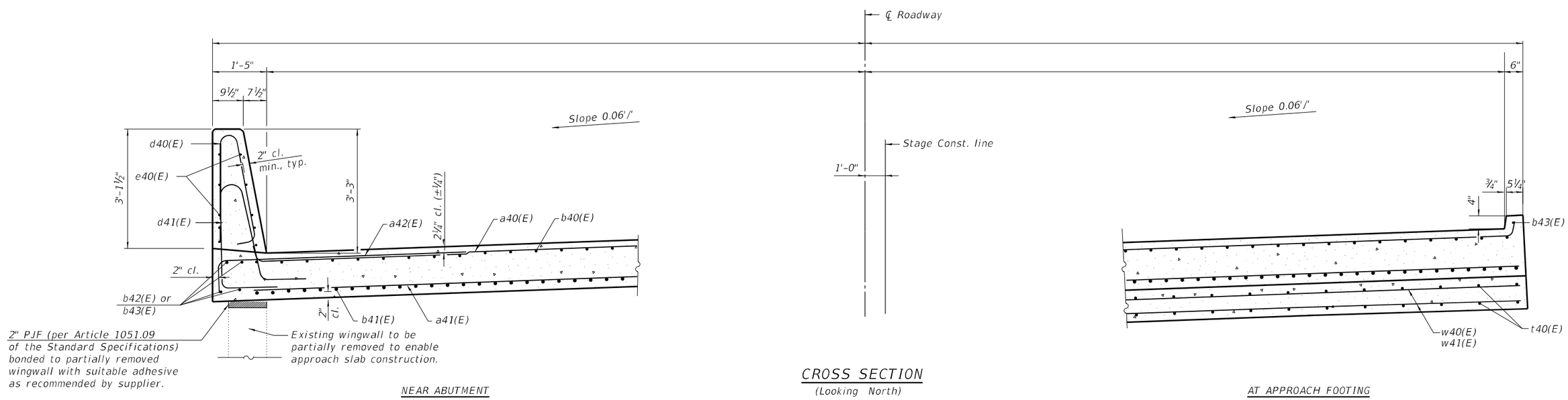

NEAR ABUTMENT

CROSS SECTION
(Looking North)

AT APPROACH FOOTING

BAIA-CIP-39CS-R(>30°) 2-1-2023

(Sheet 2 of 3)

CIVIL DESIGN, INC. WBE / DBE EFFINGHAM, IL LICENSE #184.003222	USER NAME = $USER$	DESIGNED -	REVISED -
		DRAWN -	REVISED -
	PLOT SCALE = $SCALE$	CHECKED -	REVISED -
	PLOT DATE = 12/19/2024	DATE -	REVISED -

STATE OF ILLINOIS
DEPARTMENT OF TRANSPORTATION

NORTH BRIDGE OF APPROACH SLAB DETAILS
STRUCTURE NO. 054-0050

SCALE: | SHEET 19 OF 63 SHEETS | STA. | TO STA.

F.A.I. RTE.	SECTION	COUNTY	TOTAL SHEETS	SHEET NO.
155	(54-4HB)D	LOGAN	133	53
		CONTRACT NO. 72220		
		ILLINOIS	FED. AID PROJECT	

MODEL: Default
FILE NAME: P:\Transportation\4654 - IDOT PTB 198-023 06\W04\CADD_50\054-0050-72220-01944 Approach Slab Details.dgn

Notes:

The joint opening shall be adjusted for temperature per Article 520.04 of the Standard Specifications. However, since this detail is for jointless structures, the length of bridge used to calculate the adjustment shall be equal to half the total bridge length plus the length of the bridge approach slab.

Parapet concrete shall be paid for as Concrete Superstructure.

Approach slab shall be paid for as Concrete Superstructure (Approach Slab).

Approach footing concrete shall be paid for as Concrete Structures.

The approach footing maximum applied service bearing pressure (Qmax) = 2.0 ksf.

Cost of excavation for approach footing included with Concrete Structures.

For Granular Backfill for Structures and drainage treatment details, see sheet 3 of 54.

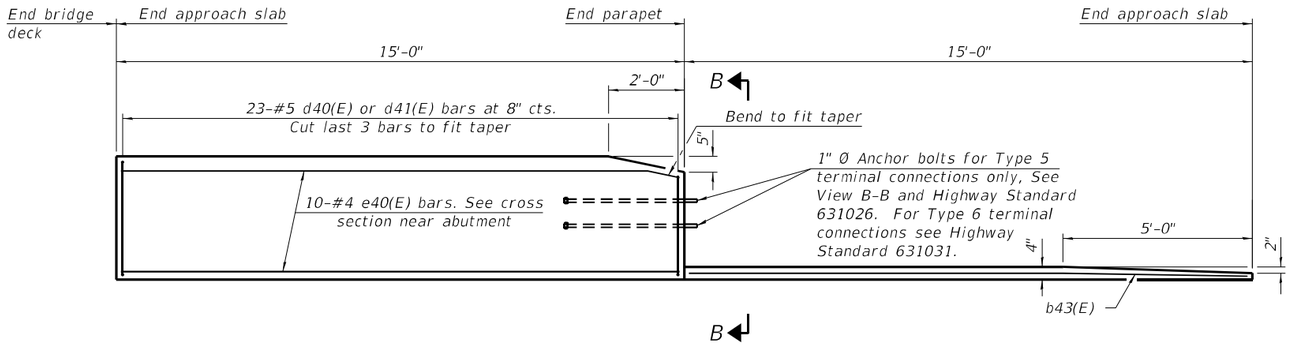

INSIDE ELEVATION OF PARAPET AND CURB

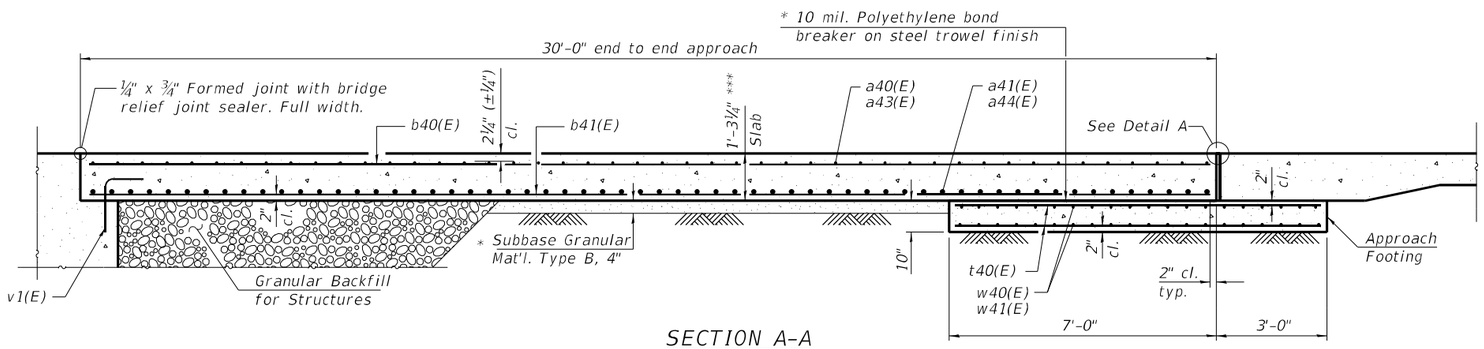

SECTION A-A

*** Prior to grinding.

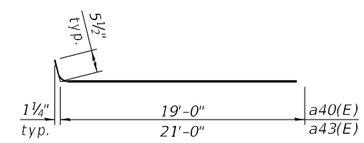

BARs a40(E) & a43(E)

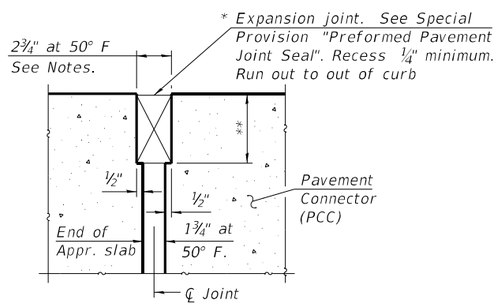

DETAIL A

(at Rt. L's)

* Cost included with Concrete Superstructure (Approach Slab).

** Per manufacturer recommendations

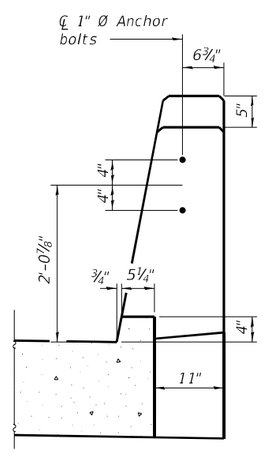

VIEW B-B

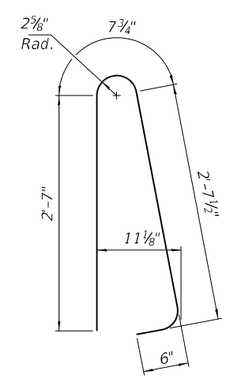

BAR d40(E)

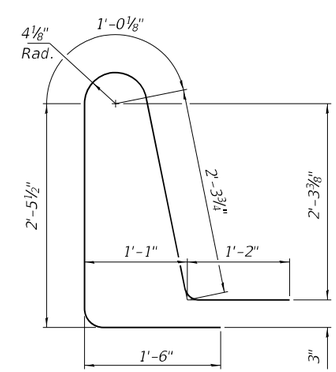

BAR d41(E)

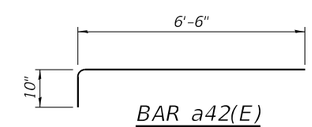

BAR a42(E)

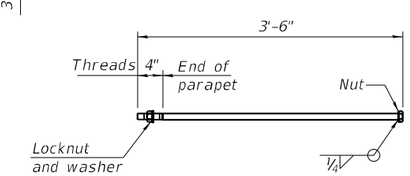

*1" Ø ANCHOR BOLT

(Anchor bolt assemblies shall be galvanized according to Article 1006.09 of the Standard Specifications)

SOUTH APPROACH SLAB BILL OF MATERIAL

Bar	No.	Size	Length	Shape
a40(E)	46	#5	19'-6"	
a41(E)	60	#8	20'-0"	
a42(E)	46	#5	7'-4"	
a43(E)	46	#5	21'-6"	
a44(E)	60	#8	22'-0"	
b40(E)	61	#5	29'-8"	
b41(E)	97	#9	29'-8"	
b42(E)	8	#5	14'-8"	
b43(E)	2	#4	18'-0"	
w40(E)	40	#5	26'-8"	
w41(E)	40	#5	29'-4"	
t40(E)	88	#4	12'-10"	
d40(E)	46	#5	6'-5"	
d41(E)	46	#5	8'-6"	
e40(E)	20	#4	14'-8"	
Concrete Superstructure			Cu. Yd.	3.9
Concrete Superstructure (Approach Slab)			Cu. Yd.	59.4
Concrete Structure			Cu. Yd.	12.7
Reinforcement Bars, Epoxy Coated			Pound	34,600

NORTH APPROACH SLAB BILL OF MATERIAL

Bar	No.	Size	Length	Shape
a40(E)	46	#5	19'-6"	
a41(E)	60	#8	20'-0"	
a42(E)	46	#5	7'-4"	
a43(E)	46	#5	21'-6"	
a44(E)	60	#8	22'-0"	
b40(E)	61	#5	29'-8"	
b41(E)	97	#9	29'-8"	
b42(E)	8	#5	14'-8"	
b43(E)	2	#4	18'-0"	
w40(E)	40	#5	26'-8"	
w41(E)	40	#5	29'-4"	
t40(E)	88	#4	12'-10"	
d40(E)	46	#5	6'-5"	
d41(E)	46	#5	8'-6"	
e40(E)	20	#4	14'-8"	
Concrete Superstructure			Cu. Yd.	3.9
Concrete Superstructure (Approach Slab)			Cu. Yd.	59.4
Concrete Structure			Cu. Yd.	12.7
Reinforcement Bars, Epoxy Coated			Pound	34,600

BAIA-CIP-39CS-L(>30°) 2-1-2023

(Sheet 3 of 3)

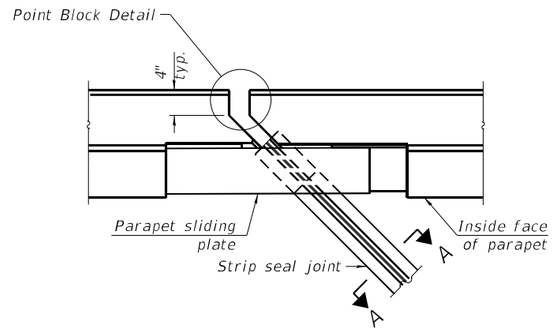

PLAN AT PARAPET

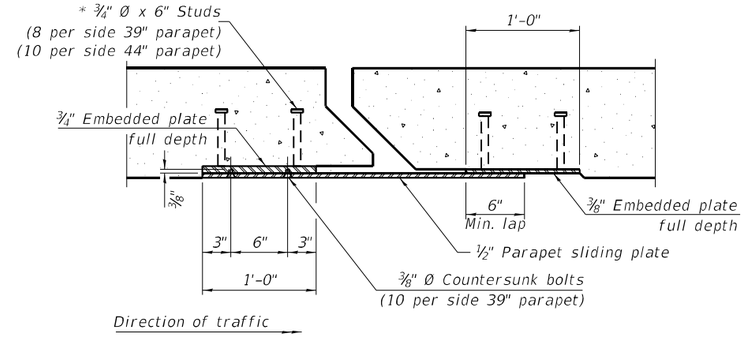

SECTION B-B

Notes:

The strip seal shall be made continuous and shall have a minimum thickness of ¼". The configuration of the strip seal shall match the configuration of the locking edge rails. Open or "webbed" strip seal gland configurations are not permitted. The gland shall be sized for a maximum rated movement of 4 inches.

The locking edge rails depicted are configured for typical applications and are conceptual only. The actual configuration of the locking edge rails and matching strip seal may vary from manufacturer to manufacturer provided they fit the application and meet the minimum anchorage shown. Flanged edge rails, however, will not be allowed. Locking edge rails may exceed the 4½" maximum depth provided the anchorage system is revised according to the manufacturer's recommendation.

The manufacturer's recommended installation methods shall be followed.

All steel components shall be galvanized after fabrication according to Article 520.03 of the Standard Specifications.

The Maximum space between locking edge rail segments shall be 3/16" and sealed with a suitable sealant; however, any rail joint within 10' measured perpendicular to the face of the curb or parapet shall be welded as shown in the locking edge rail splice detail.

Cost of parapet sliding plates, embedded plates, and anchorage studs included with Preformed Joint Strip Seal.

39" constant slope barrier shown, 44" constant slope barrier similar as noted.

The concrete opening below the strip seal will vary based on the locking edge rail chosen by the Contractor. Deck and parapet lengths shown elsewhere in the plans are dimensioned to the concrete opening, not the joint opening, and are based on the rolled locking edge rail. If the Contractor elects to use a different locking edge rail, dimensional adjustments may be required. One exception to this would be the strip seal joint at the end of the precast bridge approach slab. For these cases the pavement connector length shall be adjusted, not the length of the bridge approach slab.

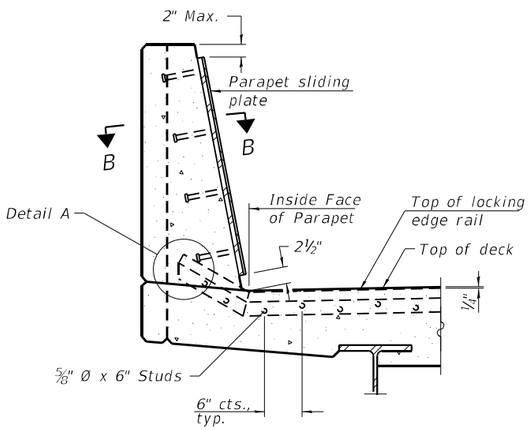

SECTION AT PARAPET

(Skews > 30° shown. Skews ≤ 30° similar except as shown in plan view.)

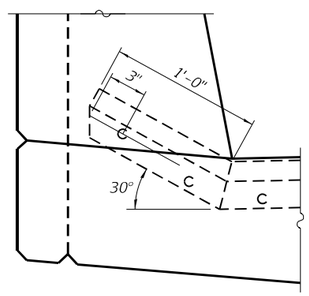

DETAIL A

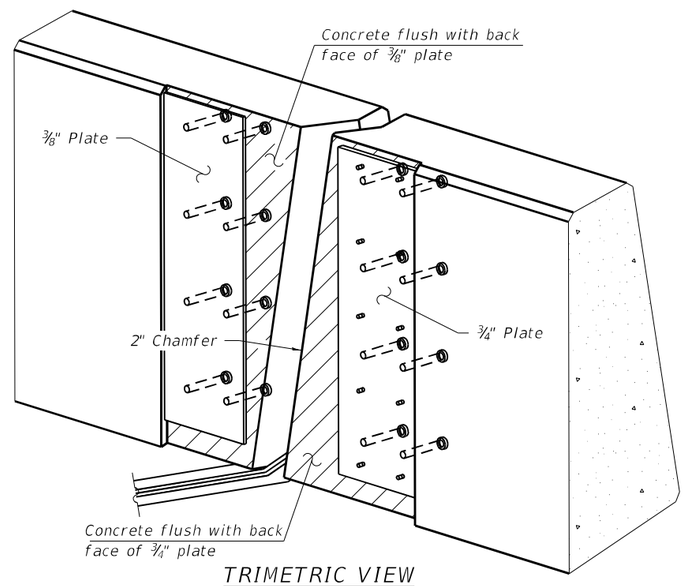

TRIMETRIC VIEW

(Showing embedded plates only)

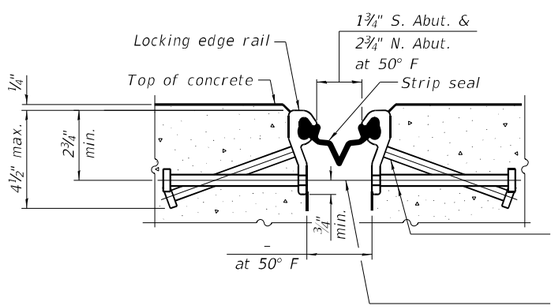

SHOWING ROLLED RAIL JOINT

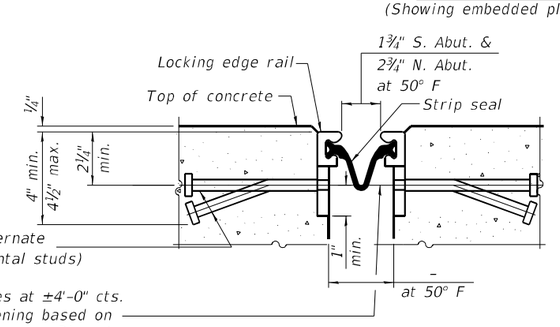

SHOWING WELDED RAIL JOINT

* ⅝" Ø x 6" studs @ 6" cts. (alternate angled/bent studs with horizontal studs)

⅜" ϕ threaded rods in 7/16" ϕ holes at ±4'-0" cts. for holding the proper joint opening based on the temperature during the deck pour. Place to miss studs. All rods shall be burned, or sawed off flush with the plates after concrete is set.

SECTION A-A

* Granular or solid flux filled headed studs conforming to Article 1006.32 of the Std. Specs., automatically end welded.

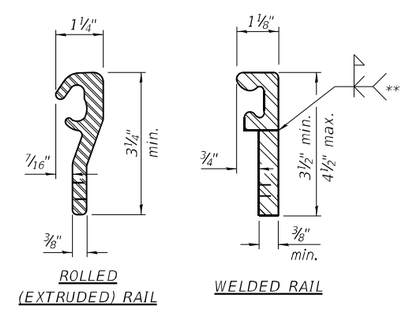

ROLLED (EXTRUDED) RAIL

WELDED RAIL

LOCKING EDGE RAILS

** Back gouge not required if complete joint penetration is verified by mock-up.

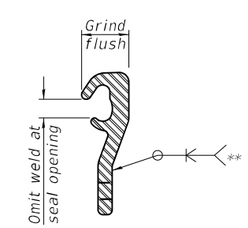

LOCKING EDGE RAIL SPLICE

The inside of the locking edge rail groove shall be free of weld residue. Rolled rail shown, welded rail similar.

BILL OF MATERIAL

Item	Unit	Total
Preformed Joint Strip Seal	Foot	110

EJ-SS 1-1-2020

MODEL: Default
FILE NAME: P:\Transportation\4854 - IDOT PTB 198-123 D600\W04\CADD-50\054-0050-72220-021-Preform Joint StripSeal.dgn

CDI CIVIL DESIGN, INC. WBE / DBE EFFINGHAM, IL LICENSE #184.003222

USER NAME = $USER$	DESIGNED -	REVISED -
	DRAWN -	REVISED -
PLOT SCALE = $SCALE$	CHECKED -	REVISED -
PLOT DATE = 12/19/2024	DATE -	REVISED -

STATE OF ILLINOIS
DEPARTMENT OF TRANSPORTATION

PREFORMED JOINT STRIP SEAL
STRUCTURE NO. 054-0050

SCALE: SHEET 21 OF 63 SHEETS STA. TO STA.

F.A.I. RTE.	SECTION	COUNTY	TOTAL SHEETS	SHEET NO.
155	(54-4HB)D	LOGAN	133	55
		CONTRACT NO. 72220		
		ILLINOIS FED. AID PROJECT		

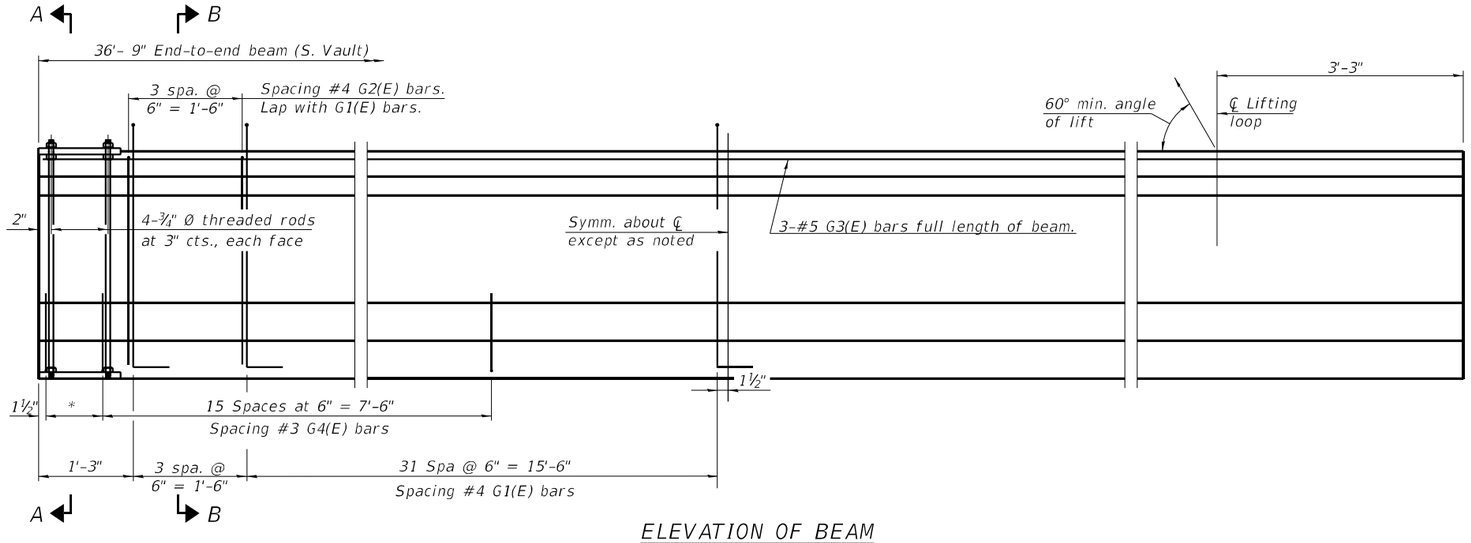

*3 (G4) spaces at 3" = 9"

ELEVATION OF BEAM
(Showing reinforcement & dimensions)

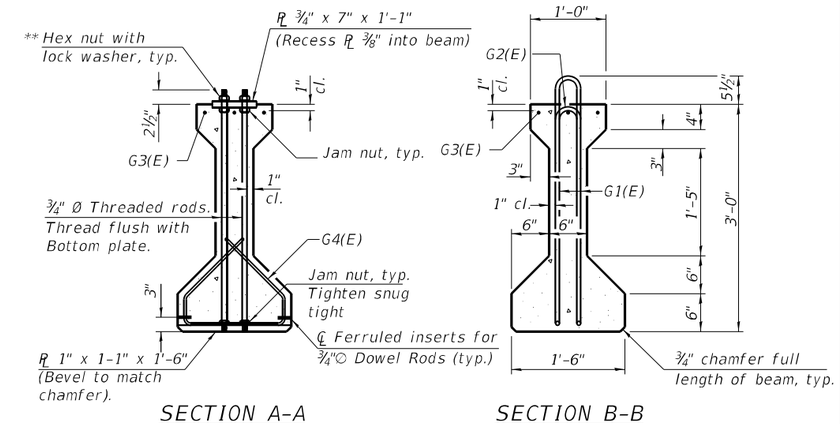

SECTION A-A
** Only tighten sufficiently to compress lock washers

SECTION B-B

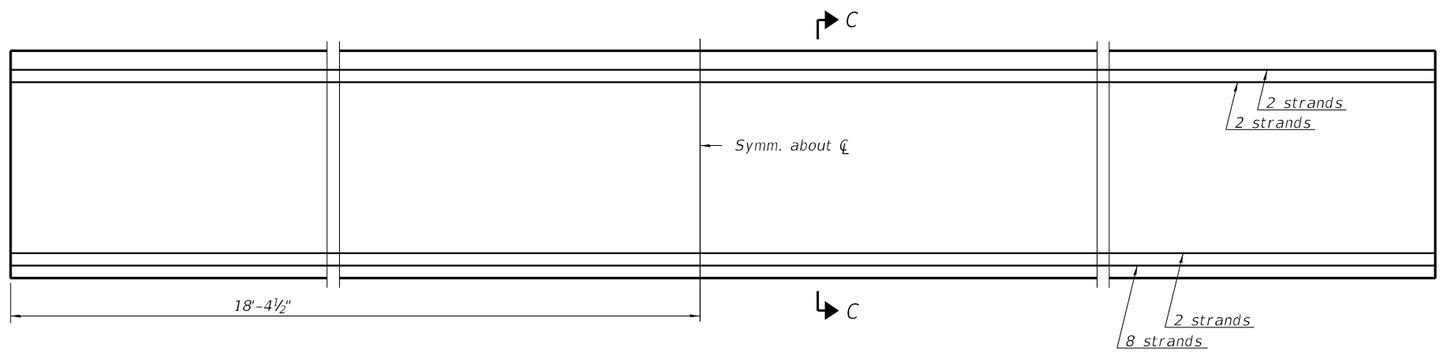

ELEVATION OF BEAM
(Showing prestressing steel)

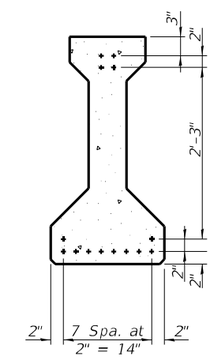

SECTION C-C
(14 -½" Ø 270 ksi strands)

BAR LIST
ONE BEAM ONLY
(For information only)

Bar	No.	Size	Length	Shape
G1(E)	72	#4	7'-7"	
G2(E)	8	#4	5'-8"	
G3(E)	3	#5	36'-6"	
G4(E)	38	#3	4'-1"	

Notes:
See sheet 24 of XX for additional details and Bill of Material.

INTERIOR BEAM MOMENT TABLE		
		0.5 Sp. 1
I	(in^4)	48,647
I'	(in^4)	199,982
Sb	(in^3)	3,165.1
Sb'	(in^3)	13,011.2
St	(in^3)	2,358.1
St'	(in^3)	9,693.7
$\wp$	(k/')	1.108
$M\wp$	('k)	178.9
$s\wp$	(k/')	0.529
$Ms\wp$	('k)	85.1
M_L	('k)	229.7
MI	('k)	98.5

INTERIOR BEAM REACTION TABLE		
		Abut./Bent
$R\wp$	(k)	19.9
$R_s\wp$	(k)	9.5
R_L	(k)	32.0
RI	(k)	13.7
R_{Total}	(k)	75.1

I: Non-composite moment of inertia of beam section ($in.^4$).
I': Composite moment of inertia of beam section ($in.^4$).
Sb: Non-composite section modulus for the bottom fiber of the prestressed beam ($in.^3$).
Sb': Composite section modulus for the bottom fiber of the prestressed beam ($in.^3$).
St: Non-composite section modulus for the top fiber of the prestressed beam ($in.^3$).
St': Composite section modulus for the top fiber of the prestressed beam ($in.^3$).
$\wp$: Un-factored non-composite dead load (kips/ft.).
$M\wp$: Un-factored moment due to non-composite dead load conservatively taken at 0.5 of the span (kip-ft.).
$s\wp$: Un-factored long-term composite (superimposed) dead load (kips/ft.).
$Ms\wp$: Un-factored moment due to long-term composite (superimposed) dead load (kip-ft.).
M_L: Un-factored live load moment on the composite section (kip-ft.).
MI: Un-factored moment due to impact on the composite section (kip-ft.).

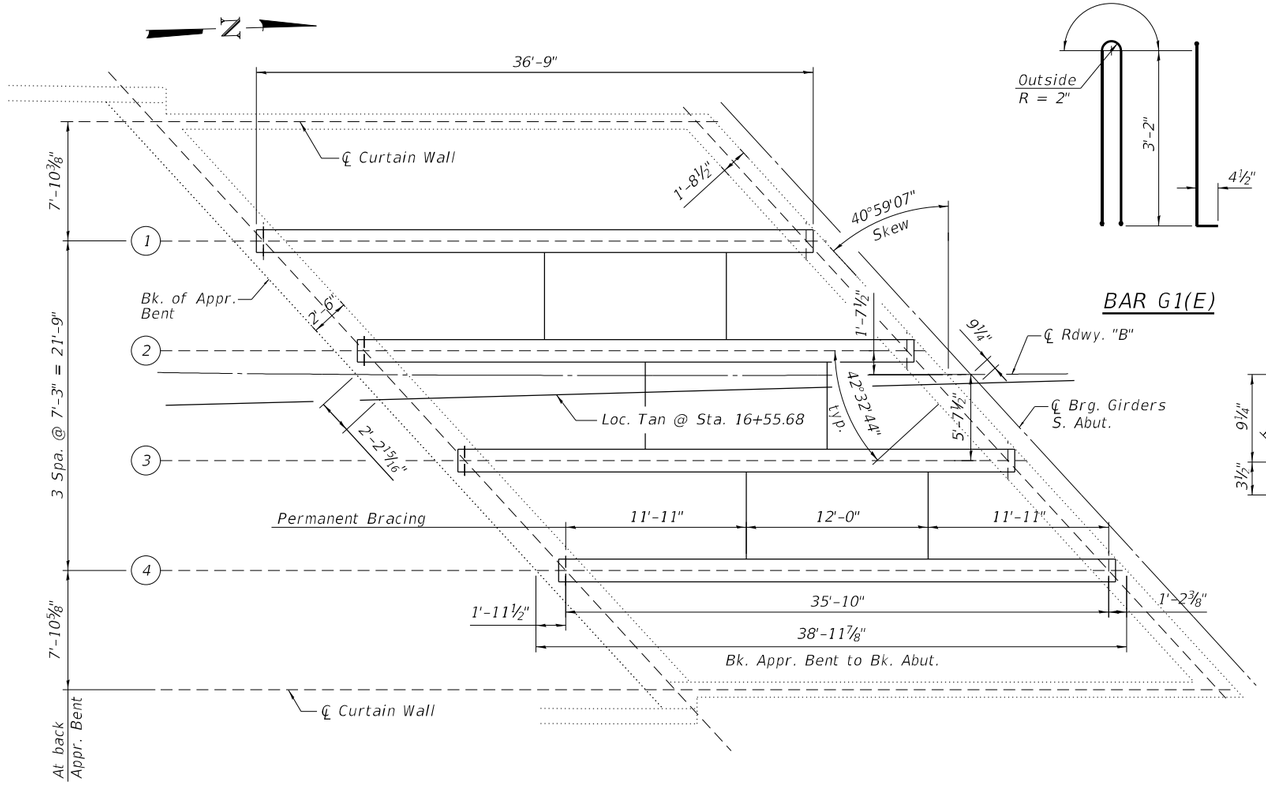

FRAMING PLAN

Install Bracing between Beam lines ② & ③ after Stage II deck is poured.

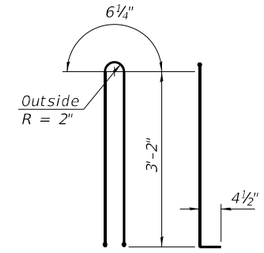

BAR G1(E)

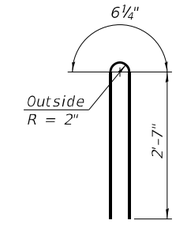

BAR G2(E)

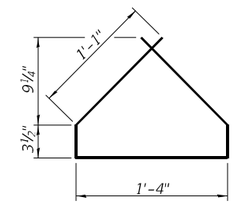

BAR G4(E)

NOTES

Inserts for ¾" Ø threaded dowel rods, when specified, are to be two strut, ferrule type for interior beams and single ferrule, flared loop type for exterior beams.

Prestressing steel shall be uncoated high strength, low relaxation 7-wire strand, Grade 270. The nominal diameter shall be ½" and the nominal cross-sectional area shall be 0.153 sq. in.

The beams shall have a final concrete compressive strength, f'c, of 6000 psi and a release concrete compressive strength, f'ci, of 4000 psi.

A minimum 2½" Ø lifting pin shall be used to engage the lifting loops during handling.

The top and bottom plates shall be AASHTO M270 Grade 50.

The top and bottom plates shall be galvanized according to AASHTO M111. The threaded rods, nuts and washers shall be galvanized according to AASHTO M232.

Threaded rods shall be ASTM F 1554 Grade 55.

The G6(E) bar assembly shall develop, in tension, at least 125 percent of the yield strength of a grade 60 reinforcement bar times the nominal cross-sectional area of a #8 bar. The assembly shall allow completion of the splice without turning of the hook bar. The hook bar shall be threaded such that the entire coupler can be threaded onto the hook bar.

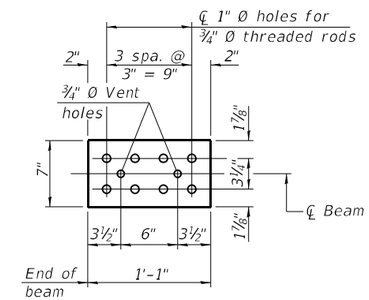

TOP PLATE

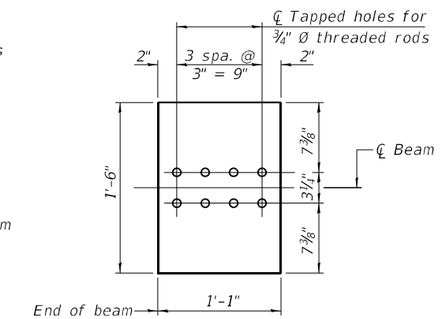

BOTTOM PLATE

See bearing details for pintle hole locations when required.

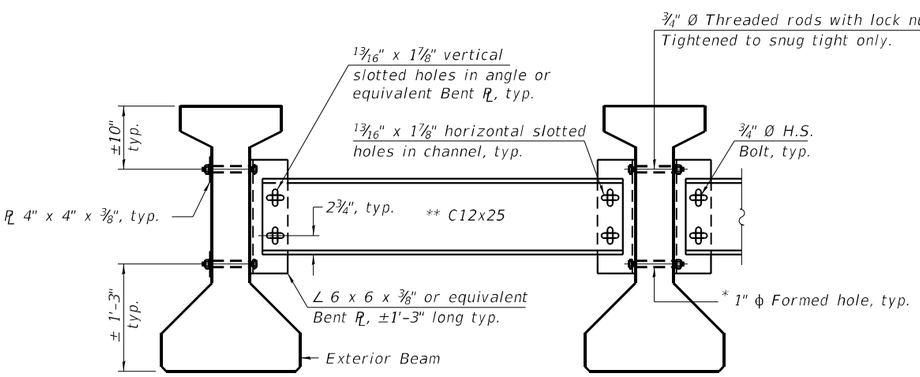

PERMANENT BRACING DETAILS FOR 36" PPC I-BEAMS

* Fabricator shall locate to miss strands within permissible tolerances.

** Alternate C12x30 channels are permitted to facilitate material acquisition.

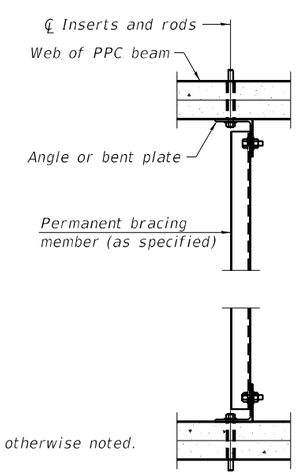

PLAN

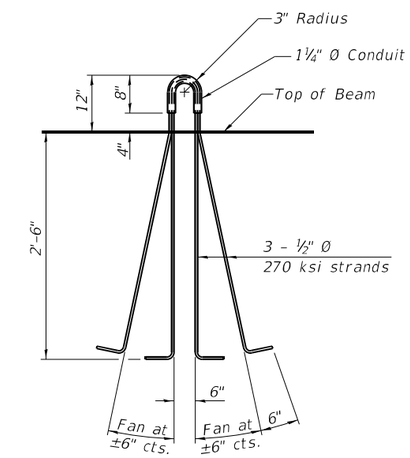

LIFTING LOOP DETAIL

Notes:

All material for bracing shall be hot dip galvanized according to AASHTO M111 unless otherwise noted.
Two hardened washers are required for each set of oversized holes.
All holes shall be 15/16" Ø unless otherwise noted.
5/16" x 3" x 3" plate washers are required over all slotted holes.
All bolts, threaded rods, and hardware shall be galvanized according to AASHTO M232.
Threaded rods shall be ASTM F 1554 Grade 55.
Bracing shall be installed as beams are erected and tightened as soon as possible during erection.
Permanent bracing shall not be paid for separately, but shall be included in the cost of Furnishing and Erecting Precast Prestressed Concrete I-Beams.

BILL OF MATERIAL

Item	Unit	Total
Furnishing and Erecting Precast Prestressed Concrete I-Beams, 36"	Ft.	147

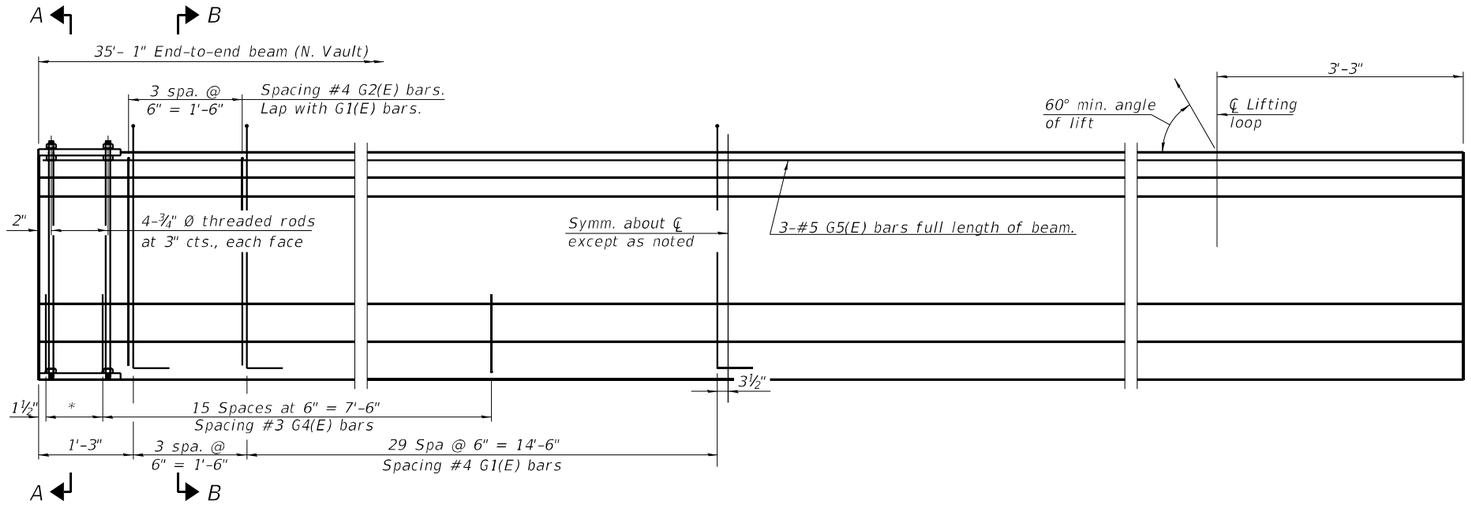

*3 spaces (G4) at 3" = 9"

ELEVATION OF BEAM
(Showing reinforcement & dimensions)

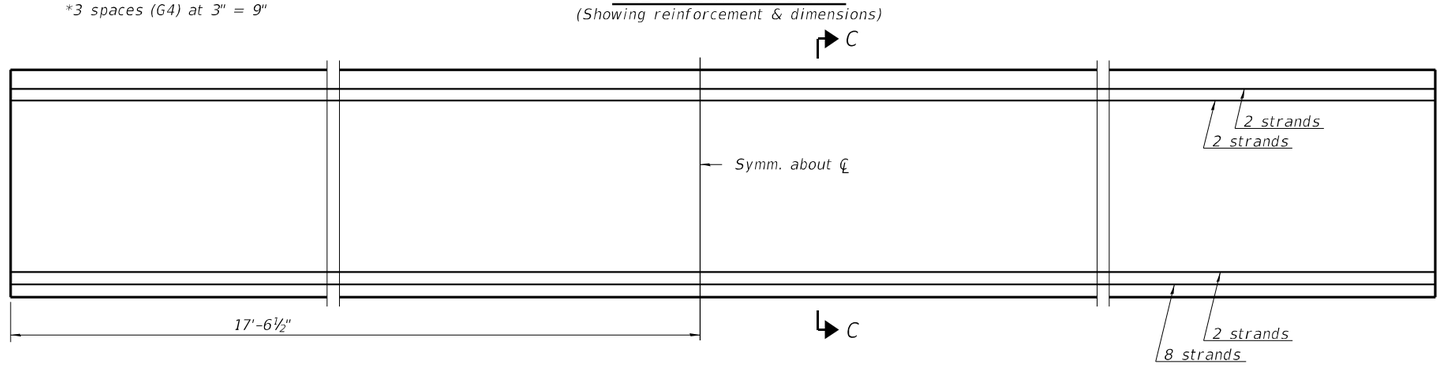

ELEVATION OF BEAM
(Showing prestressing steel)

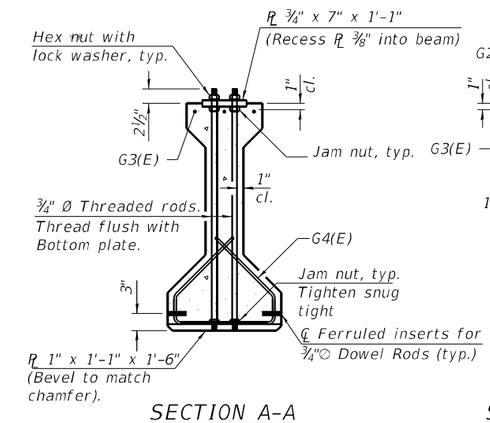

SECTION A-A
** Only tighten sufficiently to compress lock washers

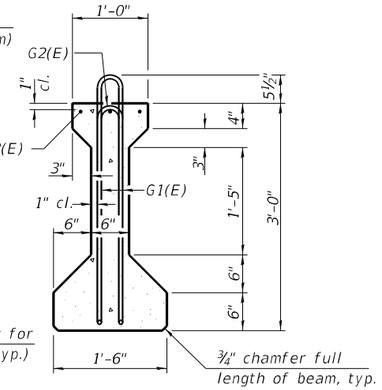

SECTION B-B

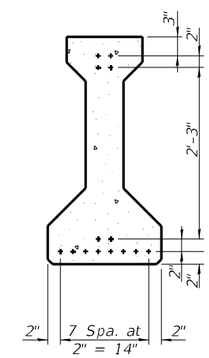

SECTION C-C
(14 -½" Ø 270 ksi strands)

BAR LIST
ONE BEAM ONLY
(For information only)

Bar	No.	Size	Length	Shape
G1(E)	66	#4	7'-7"	
G2(E)	8	#4	5'-8"	
G3(E)	3	#3	4'-1"	
G4(E)	38	#5	34'-10"	

Notes:
See sheet 26 of XX for additional details and Bill of Material.

INTERIOR BEAM MOMENT TABLE		
		0.5 Sp. 1
I	(in^4)	48,647
I'	(in^4)	199,982
Sb	(in^3)	3,165.1
Sb'	(in^3)	13,011.2
St	(in^3)	2,358.1
St'	(in^3)	9,693.7
P_L	(k/')	1.108
M_{P_L}	('k)	178.9
s_{P_L}	(k/')	0.529
Ms_{P_L}	('k)	85.1
M_{L}	('k)	229.7
MI	('k)	98.5

INTERIOR BEAM REACTION TABLE		
		Abut./Bent
R_{P_L}	(k)	19.9
$R_{s_{P_L}}$	(k)	9.5
R_{L}	(k)	32.0
RI	(k)	13.7
R_{Total}	(k)	75.1

I: Non-composite moment of inertia of beam section ($in.^4$).
I': Composite moment of inertia of beam section ($in.^4$).
Sb: Non-composite section modulus for the bottom fiber of the prestressed beam ($in.^3$).
Sb': Composite section modulus for the bottom fiber of the prestressed beam ($in.^3$).
St: Non-composite section modulus for the top fiber of the prestressed beam ($in.^3$).
St': Composite section modulus for the top fiber of the prestressed beam ($in.^3$).
P_L: Un-factored non-composite dead load (kips/ft.).
M_{P_L}: Un-factored moment due to non-composite dead load conservatively taken at 0.5 of the span (kip-ft.).
s_{P_L}: Un-factored long-term composite (superimposed) dead load (kips/ft.).
Ms_{P_L}: Un-factored moment due to long-term composite (superimposed) dead load (kip-ft.).
M_L: Un-factored live load moment on the composite section (kip-ft.).
MI: Un-factored moment due to impact on the composite section (kip-ft.).

MODEL: Default
FILE NAME: P:\Transportation\4854 - IDOT PPB 198-023 D60\WOA\CADD 50\054-0050-72220-0224-North Vaulted Span I Beam.dgn

CDI
CIVIL DESIGN, INC.
WBE / DBE
EFFINGHAM, IL
LICENSE #184.003222

USER NAME = $USER$	DESIGNED -	REVISED -	
	DRAWN -	REVISED -	
PLOT SCALE = $SCALE$	CHECKED -	REVISED -	
PLOT DATE = 12/19/2024	DATE -	REVISED -	

STATE OF ILLINOIS
DEPARTMENT OF TRANSPORTATION

NORTH VAULTED SPAN 36" PPC I-BEAM
STRUCTURE NO. 054-0050

SCALE: | SHEET 24 OF 63 SHEETS | STA. | TO STA.

F.A.I. RTE.	SECTION	COUNTY	TOTAL SHEETS	SHEET NO.
155	(54-4HB)D	LOGAN	133	58
		CONTRACT NO. 72220		
	ILLINOIS	FED. AID PROJECT		

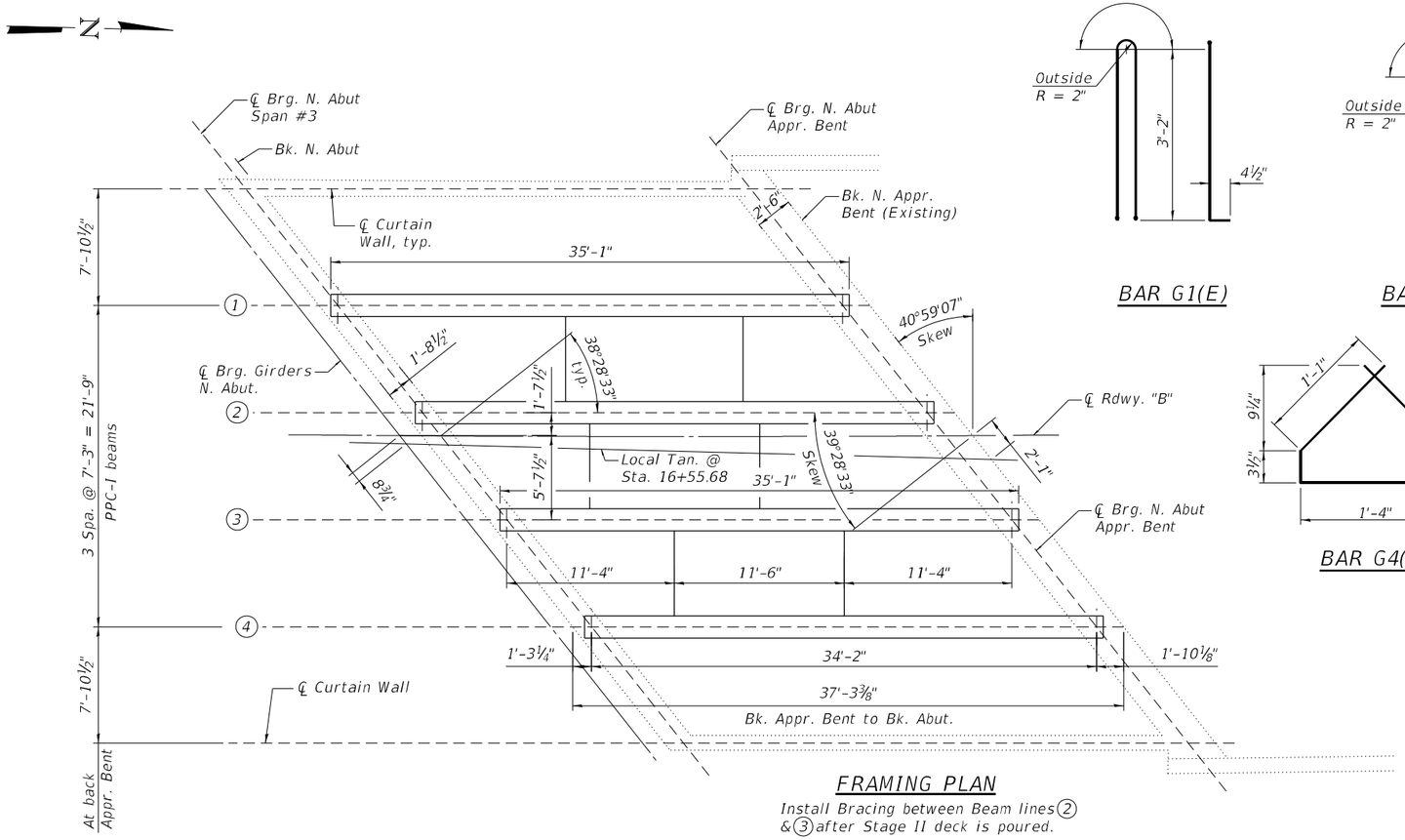

FRAMING PLAN

Install Bracing between Beam lines ② & ③ after Stage II deck is poured.

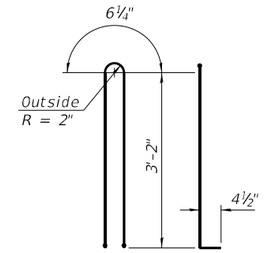

BAR G1(E)

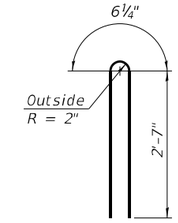

BAR G2(E)

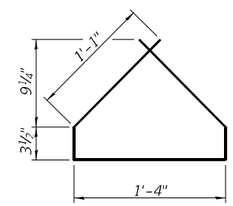

BAR G4(E)

NOTES

Inserts for ¾" Ø threaded dowel rods, when specified, are to be two strut, ferrule type for interior beams and single ferrule, flared loop type for exterior beams.

Prestressing steel shall be uncoated high strength, low relaxation 7-wire strand, Grade 270. The nominal diameter shall be ½" and the nominal cross-sectional area shall be 0.153 sq. in.

The beams shall have a final concrete compressive strength, f'c, of 6,000 psi and a release concrete compressive strength, f'ci, of 5,000 psi.

A minimum 2½" Ø lifting pin shall be used to engage the lifting loops during handling.

Tilt G6(E) bars when necessary to maintain 1½" clearance.

The top and bottom plates shall be AASHTO M270 Grade 50.

The top and bottom plates shall be galvanized according to AASHTO M111. The threaded rods, nuts and washers shall be galvanized according to AASHTO M232.

Threaded rods shall be ASTM F 1554 Grade 55.

The G6(E) bar assembly shall develop, in tension, at least 125 percent of the yield strength of a grade 60 reinforcement bar times the nominal cross-sectional area of a #8 bar. The assembly shall allow completion of the splice without turning of the hook bar. The hook bar shall be threaded such that the entire coupler can be threaded onto the hook bar.

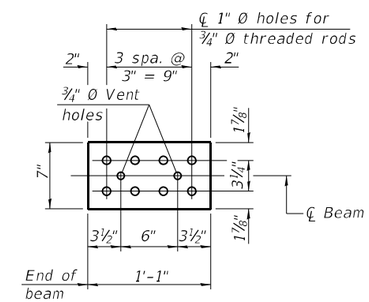

TOP PLATE

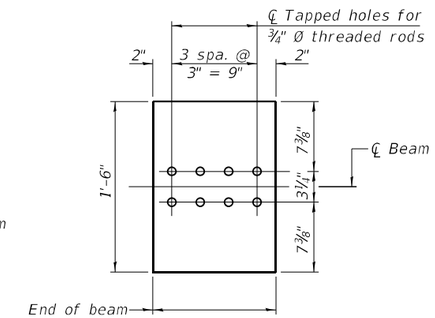

BOTTOM PLATE

See bearing details for pintle hole locations when required.

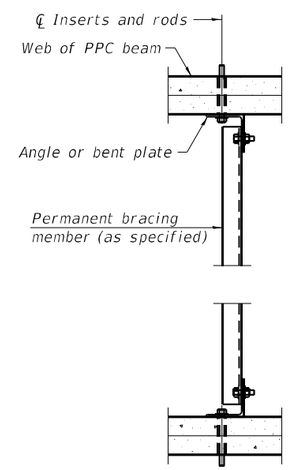

PLAN

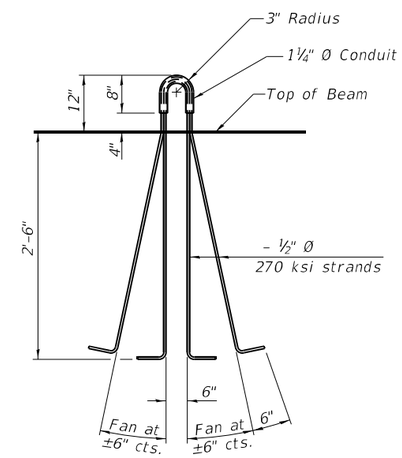

LIFTING LOOP DETAIL

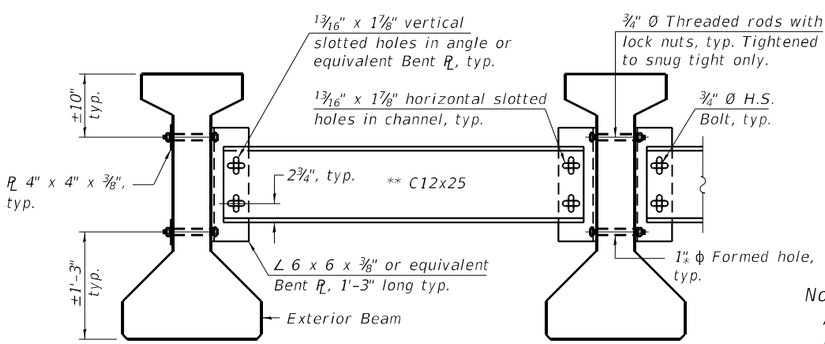

PERMANENT BRACING DETAILS FOR 36" PPC I-BEAMS

* Fabricator shall locate to miss strands within permissible tolerances.

** Alternate C12x30 channels are permitted to facilitate material acquisition.

Notes:

All material for bracing shall be hot dip galvanized according to AASHTO M111 unless otherwise noted.

Two hardened washers are required for each set of oversized holes.

All holes shall be 15⁄16" Ø unless otherwise noted.

5⁄16" x 3" x 3" plate washers are required over all slotted holes.

All bolts, threaded rods, and hardware shall be galvanized according to AASHTO M232. Threaded rods shall be ASTM F 1554 Grade 55.

Bracing shall be installed as beams are erected and tightened as soon as possible during erection.

Permanent bracing shall not be paid for separately, but shall be included in the cost of Furnishing and Erecting Precast Prestressed Concrete I-Beams.

BILL OF MATERIAL

ITEM	UNIT	TOTAL
Furnishing and Erecting Precast Prestressed Concrete I-Beams, 36"	Foot	141

MODEL: Default
FILE NAME: P:\Transportation\4854 - IDOT PTB 198-073 D600\04\CADD\50054-0050-72220-075-North Vaulted Span Framing Plan.dgn

CDI CIVIL DESIGN, INC. WBE / DBE EFFINGHAM, IL LICENSE #184.003222

USER NAME = $USER$	DESIGNED -	REVISED -
	DRAWN -	REVISED -
PLOT SCALE = $SCALE$	CHECKED -	REVISED -
PLOT DATE = 12/19/2024	DATE -	REVISED -

STATE OF ILLINOIS
DEPARTMENT OF TRANSPORTATION

NORTH VAULTED SPAN FRAMING PLAN
STRUCTURE NO. 054-0050

SCALE: | SHEET 25 OF 63 SHEETS | STA. | TO STA.

F.A.I. RTE.	SECTION	COUNTY	TOTAL SHEETS	SHEET NO.
155	(54-4HB)D	LOGAN	133	59
		CONTRACT NO. 72220		
	ILLINOIS	FED. AID PROJECT		

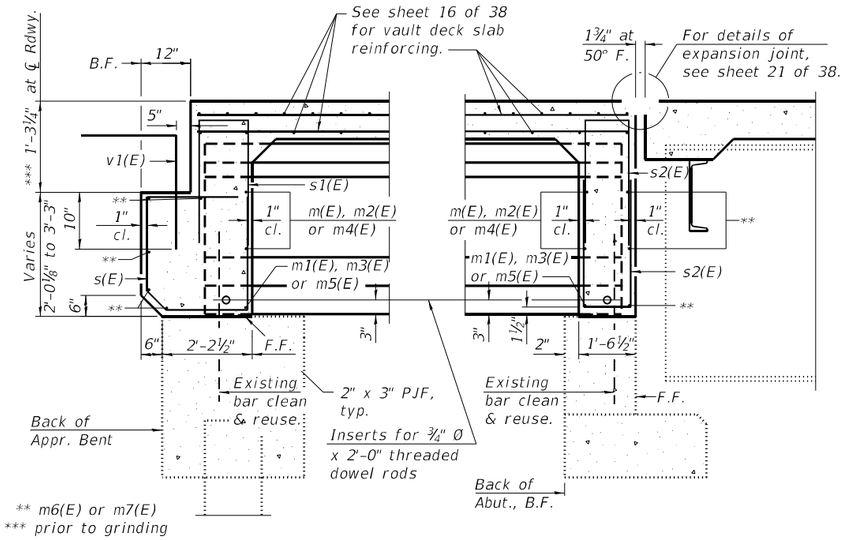

SECTION A-A

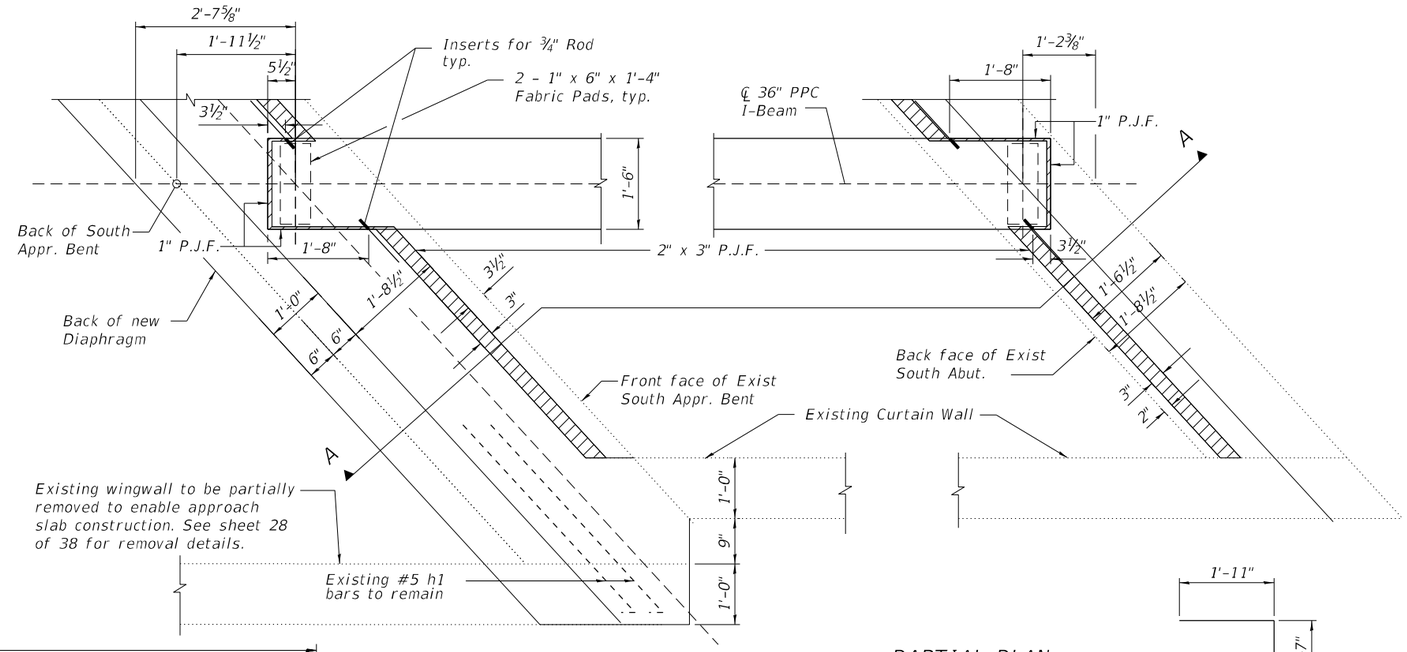

PARTIAL PLAN

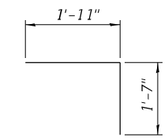

BAR v1(E)

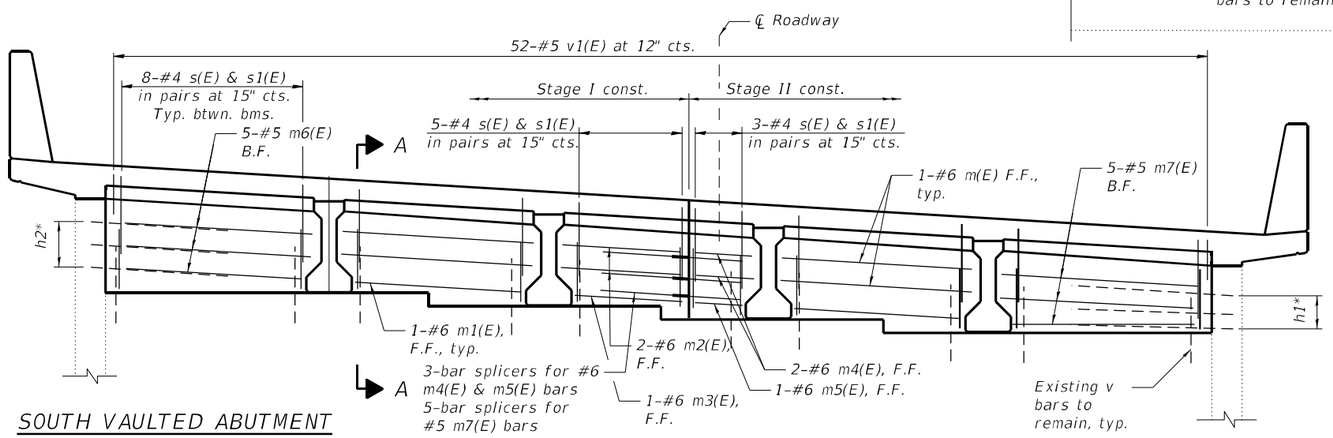

DIAPHRAGM AT APPROACH BENT

(Looking South)

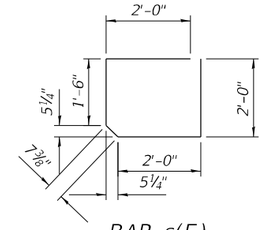

BAR s(E)

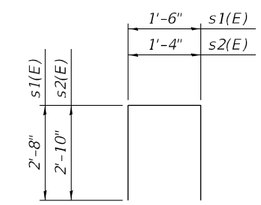

BARS s1(E) & s2(E)

* Existing v, h1 or h2 bars shall be cleaned, straightened and incorporated in new construction. Cost included with Concrete Removal.

SOUTH VAULTED ABUTMENT APPROACH SPAN BILL OF MATERIAL

Bar	No.	Size	Length	Shape
m(E)	16	#6	8'-6"	
m1(E)	8	#6	7'-7"	
m2(E)	4	#6	5'-3"	
m3(E)	2	#6	4'-8"	
m4(E)	4	#6	2'-9"	
m5(E)	2	#6	2'-1"	
m6(E)	8	#5	25'-10"	
m7(E)	8	#5	25'-3"	
s(E)	40	#4	9'-2"	
s1(E)	40	#4	6'-10"	
s2(E)	80	#4	7'-0"	
v1(E)	52	#5	3'-6"	
Concrete Superstructure			Cu. Yd.	24.6
Reinforcement Bars, Epoxy Coated			Pound	1,750

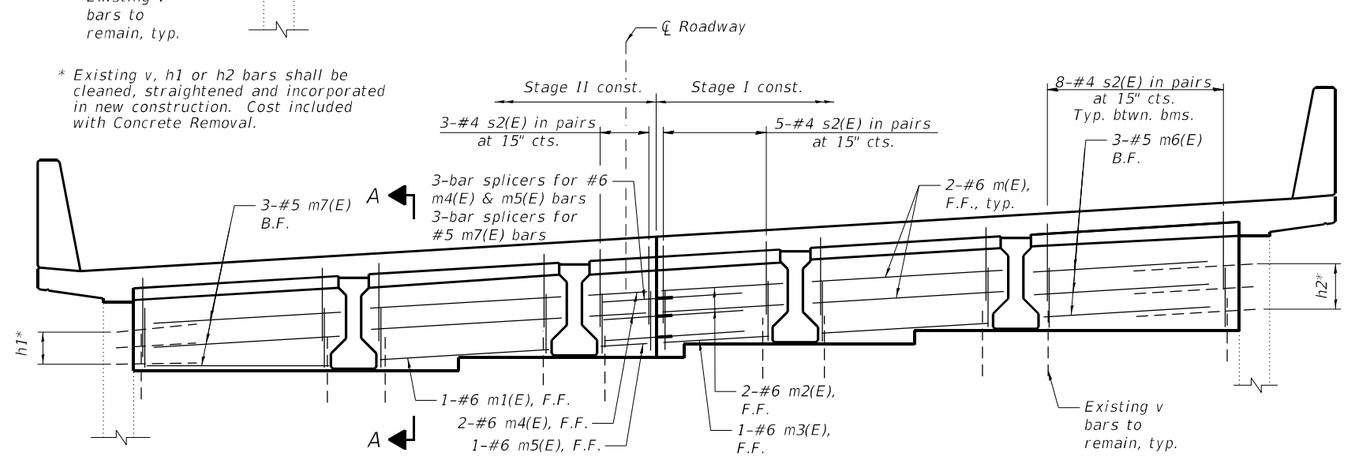

DIAPHRAGM AT ABUTMENT

(Looking North)

MODEL: Default
FILE NAME: P:\Transportation\4854 - IDOT PTB 198-023 06(WO4)(CADD 50)\054-0050-72220-026 South Vaulted Approach Span Details.dgn

CDI CIVIL DESIGN, INC. WBE / DBE EFFINGHAM, IL LICENSE #184.003222

USER NAME = $USER$	DESIGNED - RT	REVISED -	
	DRAWN - DS	REVISED -	
PLOT SCALE = $SCALE$	CHECKED - JS	REVISED -	
PLOT DATE = 3/27/2025	DATE - 3/2025	REVISED -	

STATE OF ILLINOIS
DEPARTMENT OF TRANSPORTATION

SOUTH VAULTED APPROACH SPAN DETAILS
STRUCTURE NO. 054-0050

SCALE: | SHEET 26 OF 38 SHEETS | STA. | TO STA.

F.A.I. RTE.	SECTION	COUNTY	TOTAL SHEETS	SHEET NO.
155	(54-4HB)D	LOGAN	133	60
		CONTRACT NO. 72220		
	ILLINOIS	FED. AID PROJECT		

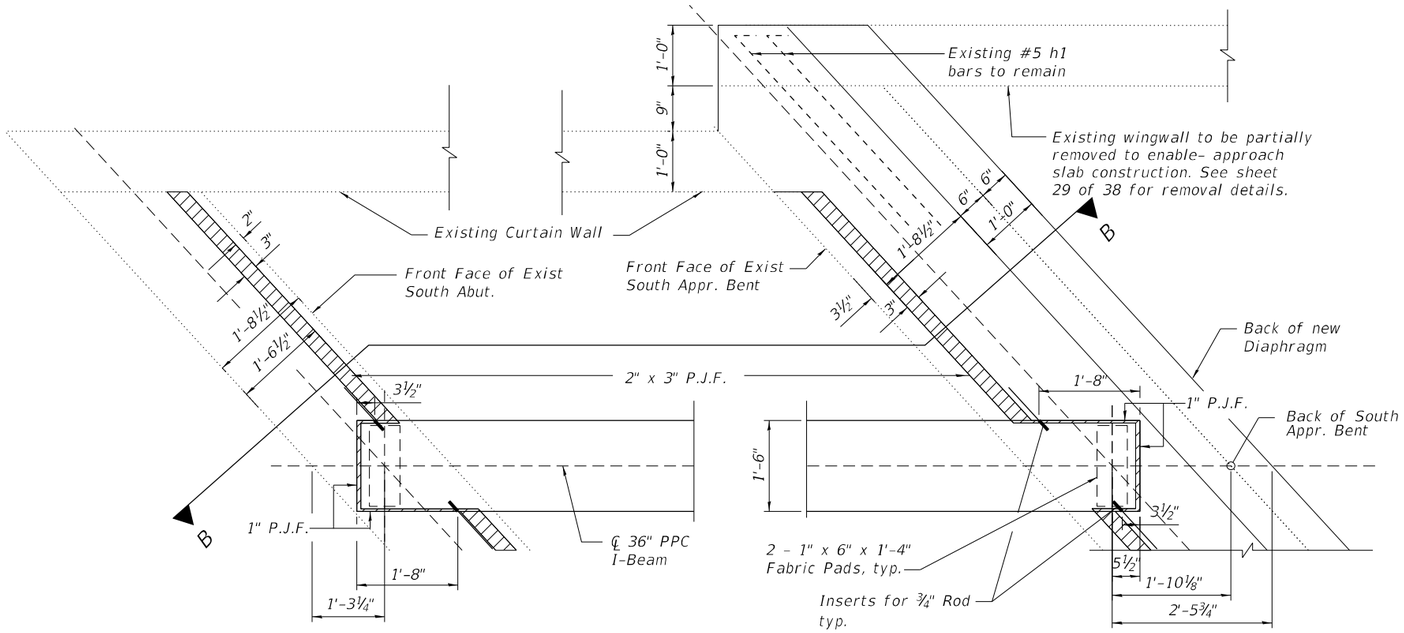

PARTIAL PLAN

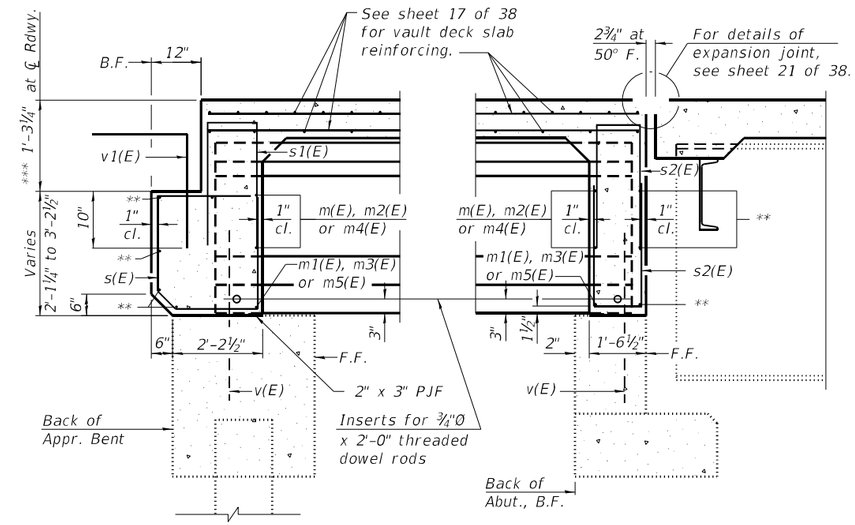

SECTION B-B

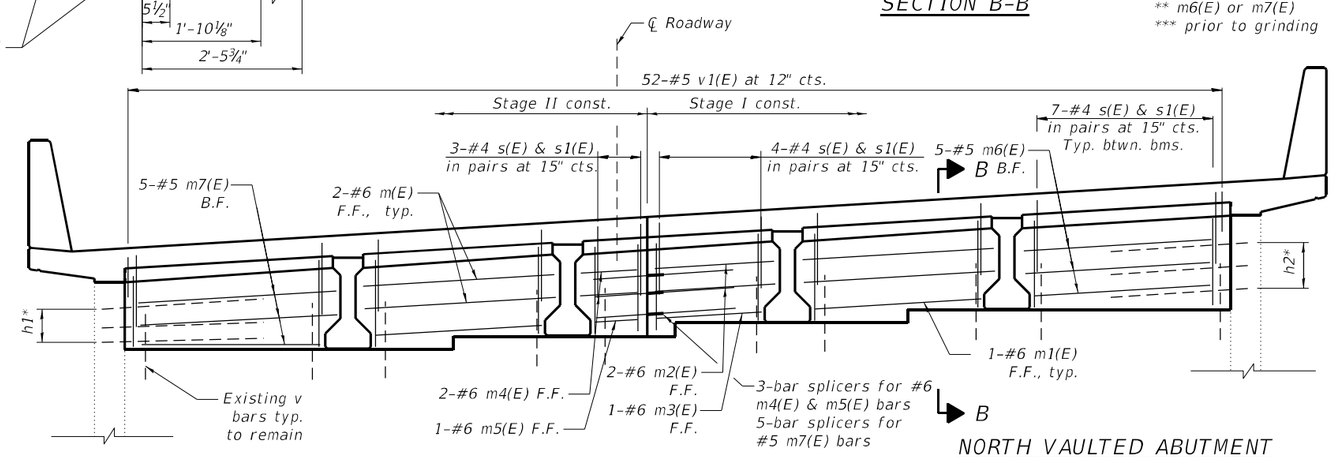

DIAPHRAGM AT APPROACH BENT

(Looking North)

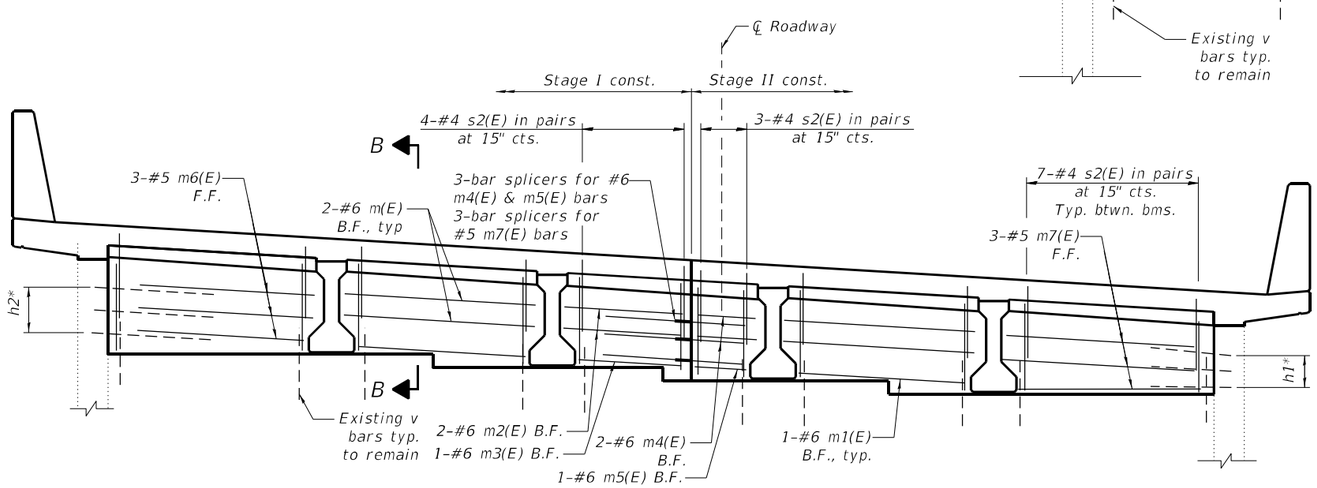

DIAPHRAGM AT ABUTMENT

(Looking South)

* Existing v, h1 or h2 bars shall be cleaned, straightened and incorporated in new construction. Cost included with Concrete Removal.

NORTH VAULTED ABUTMENT APPROACH SPAN BILL OF MATERIAL

Bar	No.	Size	Length	Shape
m(E)	16	#6	8'-6"	———
m1(E)	8	#6	7'-7"	———
m2(E)	4	#6	5'-3"	———
m3(E)	2	#6	4'-8"	———
m4(E)	4	#6	2'-9"	———
m5(E)	2	#6	2'-1"	———
m6(E)	8	#5	25'-10"	———
m7(E)	8	#5	25'-3"	———
s(E)	40	#4	9'-2"	⊔
s1(E)	40	#4	6'-10"	⊔
s2(E)	80	#4	7'-0"	⊔
v1(E)	52	#5	3'-6"	⊓
Concrete Superstructure			Cu. Yd.	24.6
Reinforcement Bars, Epoxy Coated			Pound	1,760

See Sheet 26 of 38 for bar bending details.

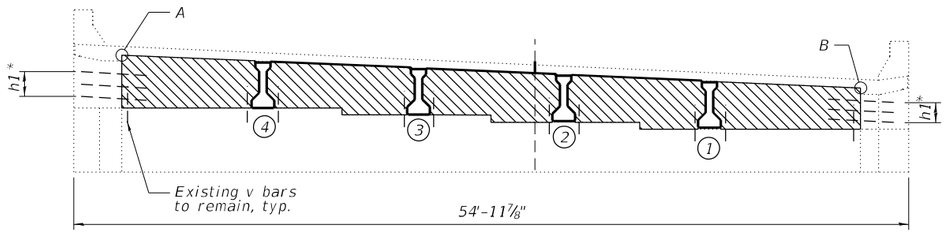

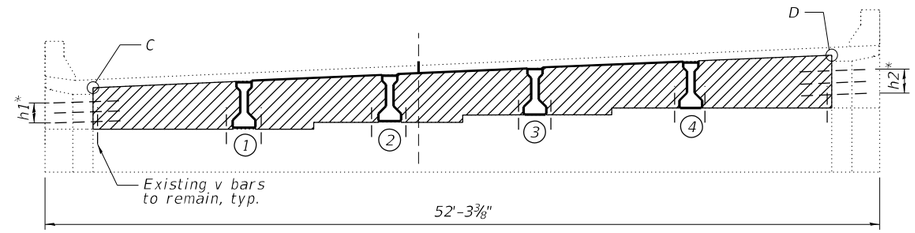

ELEVATION
(S. Approach Bent)
(Looking South)

* Existing h1 and h2 bars to remain

ELEVATION
(N. Approach Bent)
(Looking North)

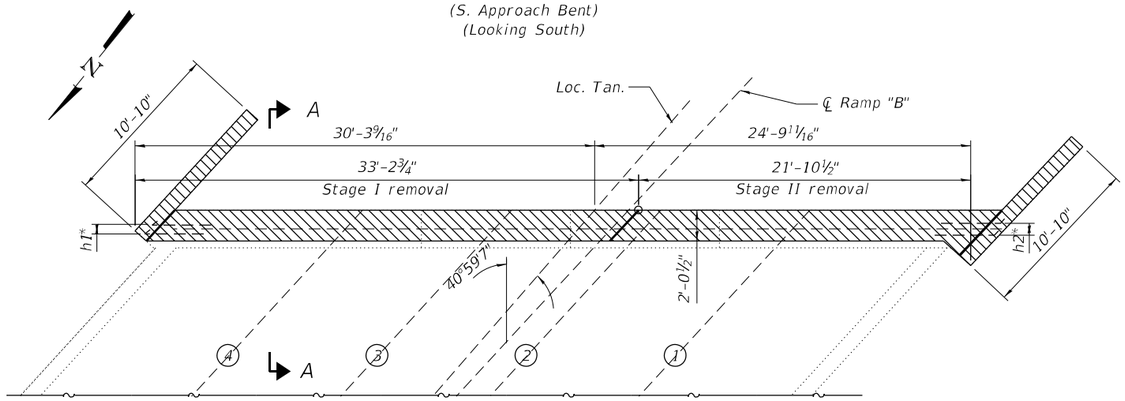

PLAN
(S. Approach Bent)

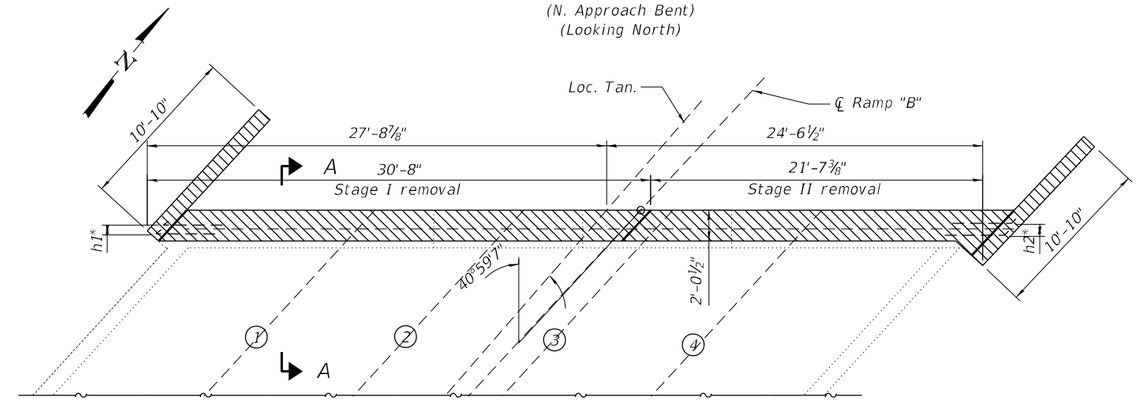

PLAN
(N. Approach Bent)

EXIST. BEARING SEAT ELEVATIONS

Beam No.	S. Abutment	N. Abutment
1	±583.70	±583.67
2	±584.16	±584.10
3	±584.65	±584.56
4	±585.31	±585.04

TOP OF EXISTING DIAPHRAGM ELEVATIONS

Point	S. Abutment	N. Abutment
A	±586.65	-
B	±586.37	-
C	-	±586.80
D	-	±588.94

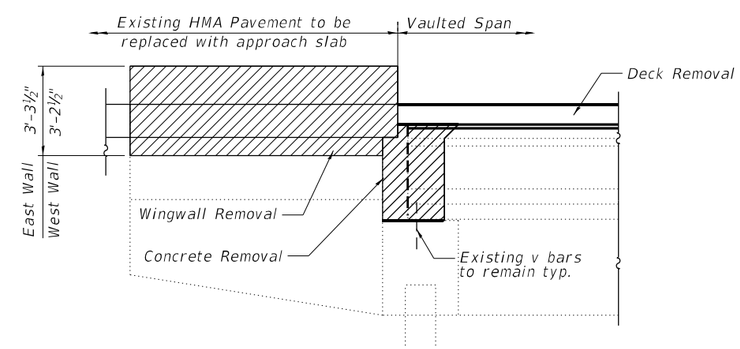

SECTION A-A

MODEL: Default
FILE NAME: P:\Transportation\4854 - IDOT PTB 198-073 D600WO4\CADD\50054-0050-72220-028- Conc Removal Approach Bent.dgn

CDI CIVIL DESIGN, INC. WBE / DBE EFFINGHAM, IL LICENSE #184.003222	USER NAME = $USER$	DESIGNED -	REVISED -	STATE OF ILLINOIS DEPARTMENT OF TRANSPORTATION	CONCRETE REMOVAL APPROACH BENTS STRUCTURE NO. 054-0050	F.A.I. RTE.	SECTION	COUNTY	TOTAL SHEETS / SHEET NO.
		DRAWN -	REVISED -			155	(54-4HB)D	LOGAN	133 / 62
	PLOT SCALE = $SCALE$	CHECKED -	REVISED -			CONTRACT NO. 72220			
	PLOT DATE = 12/19/2024	DATE -	REVISED -		SCALE: SHEET 28 OF 63 SHEETS STA. TO STA.	ILLINOIS	FED. AID PROJECT		

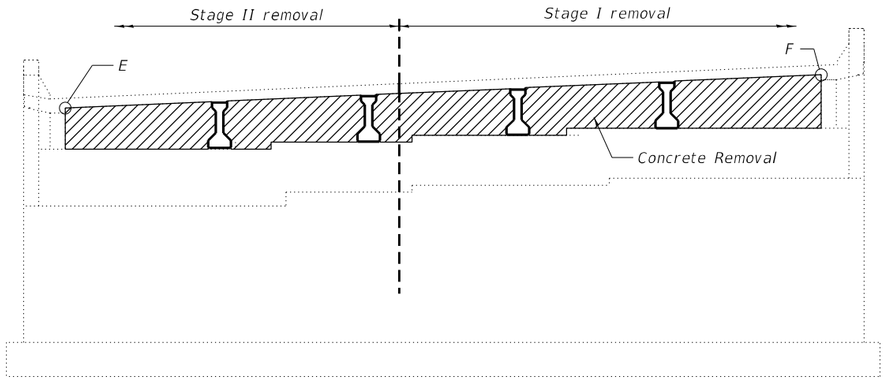

ELEVATION
(S. Abutment)
(Looking North)

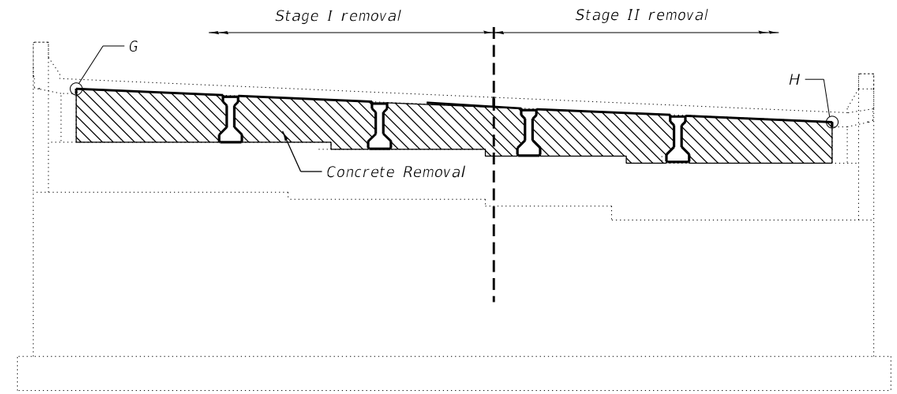

ELEVATION
(N. Abutment)
(Looking South)

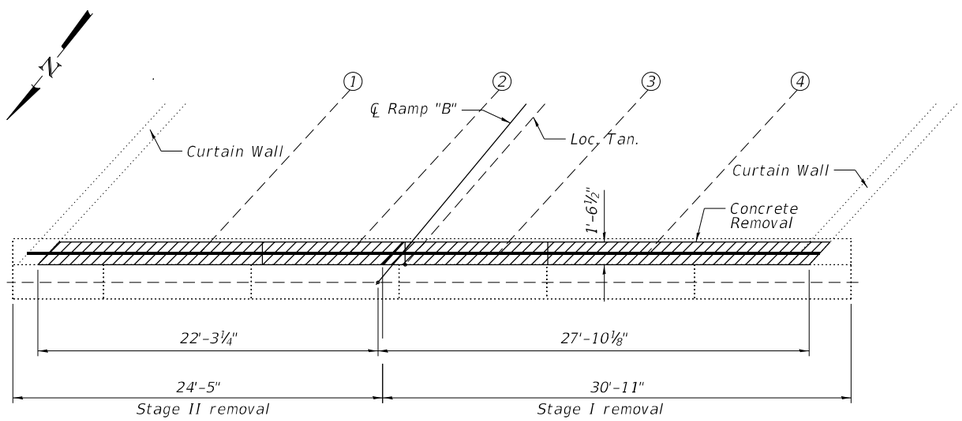

PLAN
(S. Abutment)

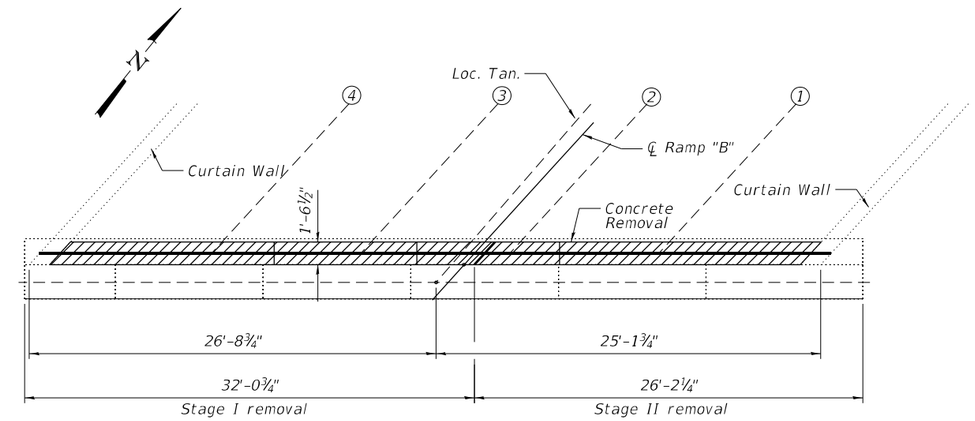

PLAN
(N. Abutment)

EXIST. BEARING SEAT ELEVATIONS

Beam No.	S. Abutment	N. Abutment
1	±583.87	±584.14
2	±584.33	±584.55
3	±584.81	±584.98
4	±585.27	±585.43

TOP OF EXISTING DIAPHRAGM ELEVATIONS

Point	S. Abutment	N. Abutment
E	±586.53	-
F	±588.78	-
G	-	±588.94
H	-	±586.77

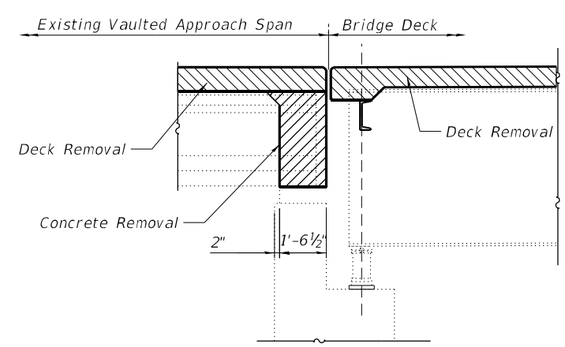

SECTION B-B

MODEL: Default
FILE NAME: P:\Transportation\4854 - IDOT PTB 198-023 D6\DWG\CADD 56\0054-0050-72220-029- Conc Removal Abutment.dgn

CIVIL DESIGN, INC.
WBE / DBE
EFFINGHAM, IL
LICENSE #184.003222

USER NAME = $USER$	DESIGNED -	REVISED -
	DRAWN -	REVISED -
PLOT SCALE = $SCALE$	CHECKED -	REVISED -
PLOT DATE = 12/19/2024	DATE -	REVISED -

STATE OF ILLINOIS
DEPARTMENT OF TRANSPORTATION

CONCRETE REMOVAL ABUTMENTS
STRUCTURE NO. 054-0050

SCALE: | SHEET 29 OF 63 SHEETS | STA. | TO STA.

F.A.I. RTE.	SECTION	COUNTY	TOTAL SHEETS	SHEET NO.
155	(54-4HB)D	LOGAN	133	63
		CONTRACT NO. 72220		
	ILLINOIS	FED. AID PROJECT		

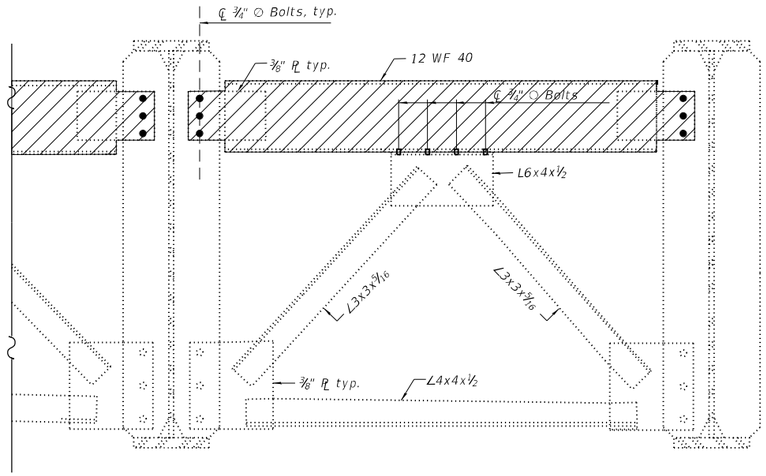

EXISTING END DIAPHRAGM PARTIAL REMOVAL DETAIL

Remove portion of each end diaphragm at
both the N. Abut and S. Abut. (12 Locations).
Cost included with Structural Steel Repair
(North Abutment Shown, South Abutment Similar)
Remove entire end diaphragm between girder
lines 3 & 4 prior to Stage I deck removal.
Store these two end diaphgrams and
reinstall after Stage II deck slab is poured.

LEGEND

To be Removed

Remove prior to Stage I Deck removal, store existing cross frames in a covered area and reinstall existing cross frames after Stage II deck pour is complete.

BOLT HOLE LEGEND

● - Field drill using existing steel or template

Note:

1. Two hardened washers for each diaphragm connection
2. Load carrying components designated "CVN" shall conform to the Charpy-V Notch Impact Energy Requirement, Zone 2.
3. Reinstall end diaphragms prior to the concrete deck pour in each stage except at the stage construction bay. Install the proposed staged construction bay end diaphragm steel after the both stages of the deck pour are complete.

BILL OF MATERIAL

ITEM	UNIT	TOTAL
Structural Steel Repair	Pound	5,290

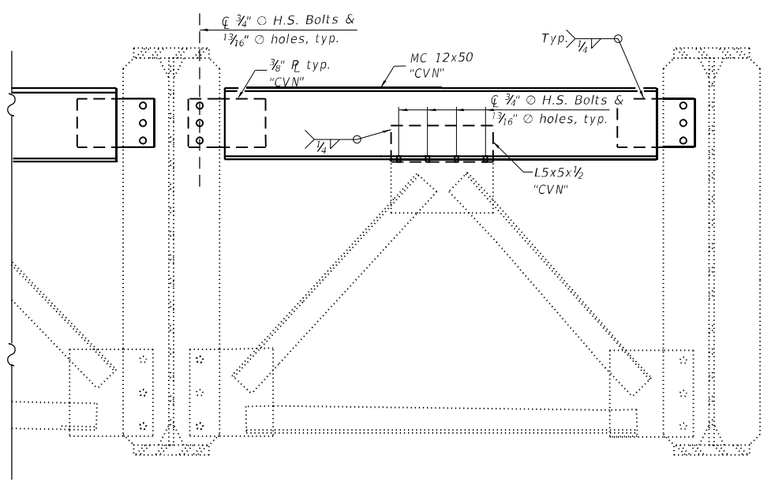

EXISTING END DIAPHRAGM REPAIR DETAIL

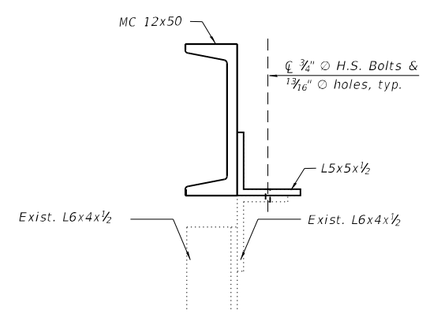

SECTION A-A

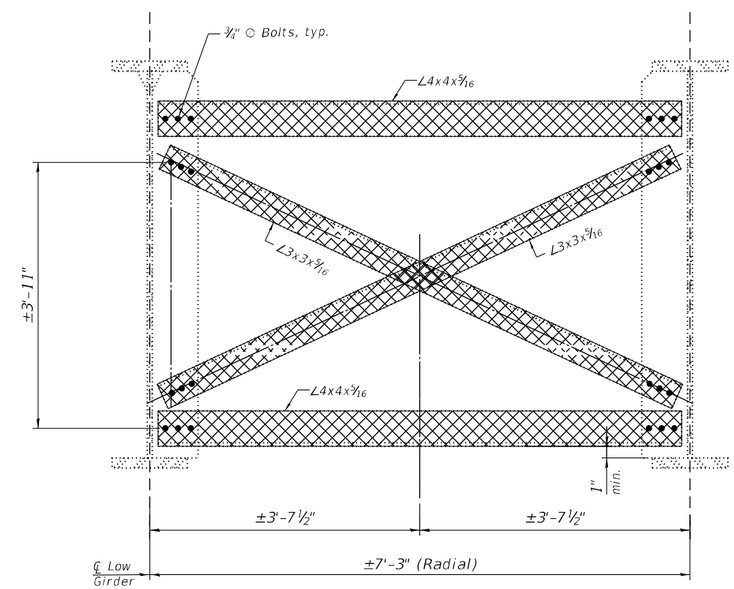

INTERMEDIATE CROSS FRAME DETAIL

Remove the intermediate diaphragms between girder
lines 3 & 4 prior to Stage I deck removal (5 Locations).
Cost included with Structural Steel Repair
Store the intermediate diaphgrams and
reinstall after Stage II deck slab is poured.

MODEL: Default
FILE NAME: P:\Transportation\4854 - IDOT PTB 198-023 D6(WO4)\CADD_56\054-0050-72220-030-Structural Repair Details.dgn

CIVIL DESIGN, INC.
WBE / DBE
EFFINGHAM, IL
LICENSE #184.003222

USER NAME = $USER$	DESIGNED -	REVISED -	
	DRAWN -	REVISED -	
PLOT SCALE = $SCALE$	CHECKED -	REVISED -	
PLOT DATE = 12/19/2024	DATE -	REVISED -	

STATE OF ILLINOIS
DEPARTMENT OF TRANSPORTATION

STRUCTURAL REPAIR DETAILS
STRUCTURE NO. 054-0050

SCALE: | SHEET 30 OF 63 SHEETS | STA. | TO STA.

F.A.I. RTE.	SECTION	COUNTY	TOTAL SHEETS	SHEET NO.
155	(54-4HB)D	LOGAN	133	64
		CONTRACT NO. 72220		
		ILLINOIS	FED. AID PROJECT	

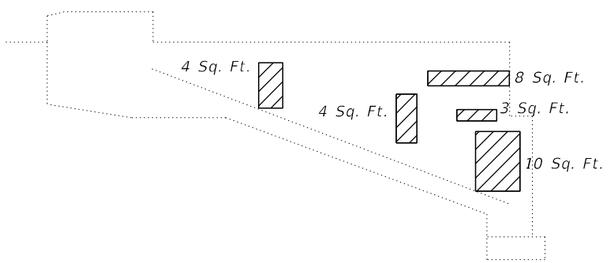

WEST CURTAIN WALL

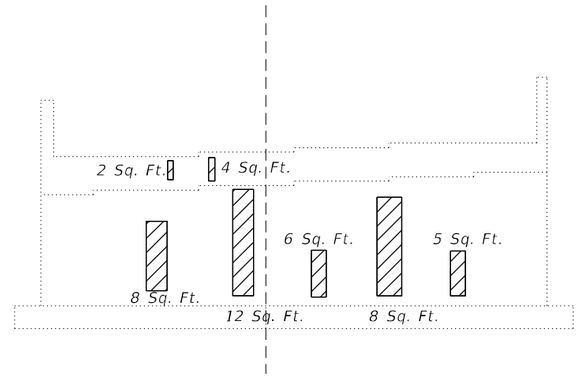

NORTH ABUTMENT

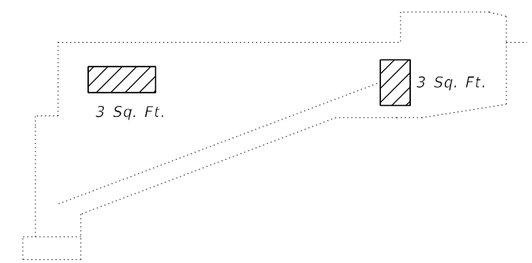

EAST CURTAIN WALL

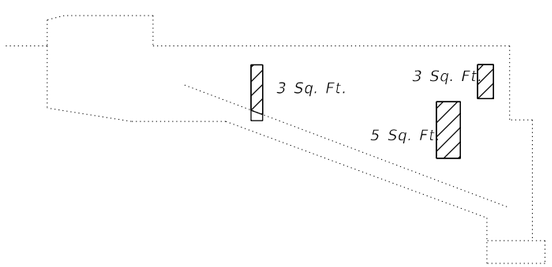

EAST CURTAIN WALL

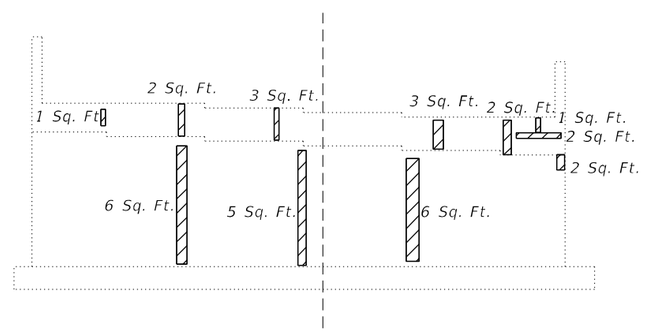

SOUTH ABUTMENT

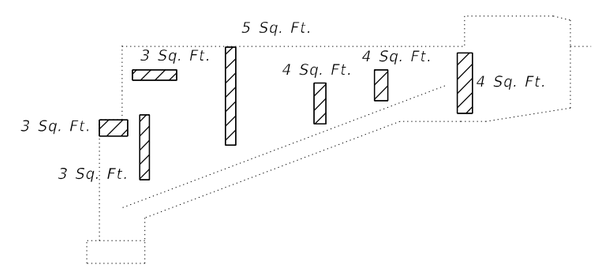

WEST CURTAIN WALL

BILL OF MATERIAL

ITEM	UNIT	TOTAL
Structural Repair of Concrete (Depth equal to or less than 5")	Sq. Ft.	150

MODEL: Default
FILE NAME: P:\Transportation\854 - IDOT PTB 198-023 D60WO0A\CADD 50\054-0050-72220-031- Abutment Repair Details.dgn

CIVIL DESIGN,INC.
WBE / DBE
EFFINGHAM, IL
LICENSE #184.003222

USER NAME = $USER$	DESIGNED -	REVISED -
	DRAWN -	REVISED -
PLOT SCALE = $SCALE$	CHECKED -	REVISED -
PLOT DATE = 12/19/2024	DATE -	REVISED -

STATE OF ILLINOIS
DEPARTMENT OF TRANSPORTATION

ABUTMENT REPAIR DETAILS
STRUCTURE NO. 054-0050

SCALE: | SHEET 31 OF 63 SHEETS | STA. | TO STA.

F.A.I. RTE.	SECTION	COUNTY	TOTAL SHEETS	SHEET NO.
155	(54-4HB)D	LOGAN	133	65
		CONTRACT NO. 72220		
	ILLINOIS	FED. AID PROJECT		

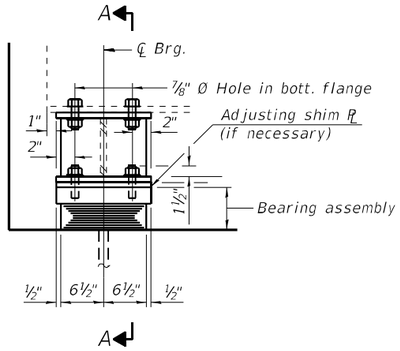

ELEVATION AT ABUT.

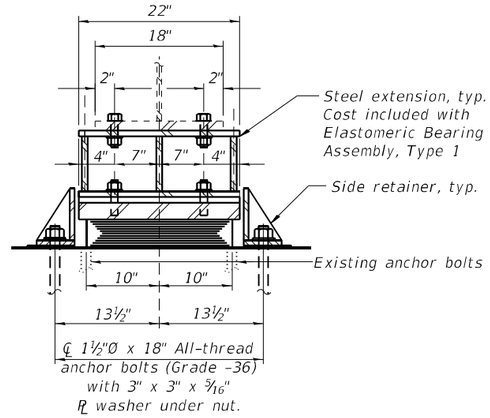

SECTION A-A

TYPE I ELASTOMERIC EXP. BRG.

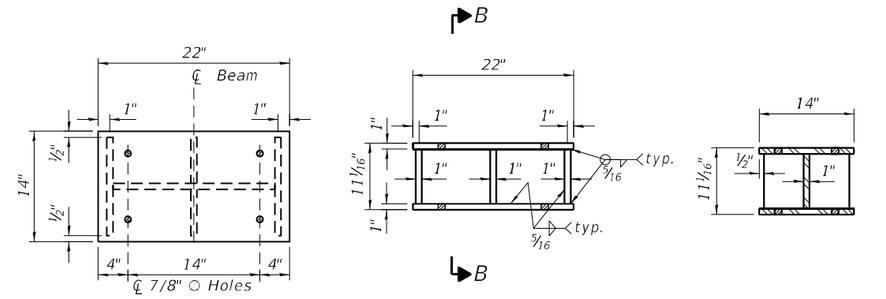

PLAN

ELEVATION

SECTION B-B

STEEL EXTENSION DETAILS

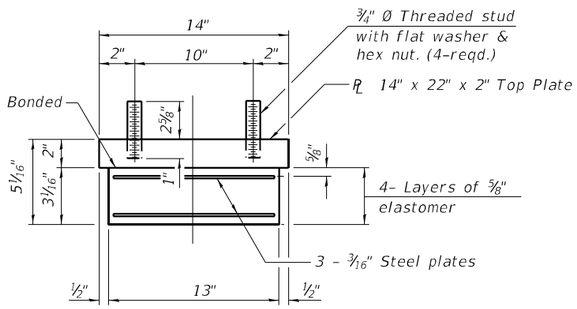

BEARING ASSEMBLY

Notes:
Side retainers and stainless steel plates shall be included in the cost of Elastomeric Bearing Assembly, Type I.
Anchor bolts and side retainers at all supports shall be installed as each member is erected unless an equivalent temporary means of lateral restraint is used.

Note:
Shim plates shall not be placed under bearing assembly.

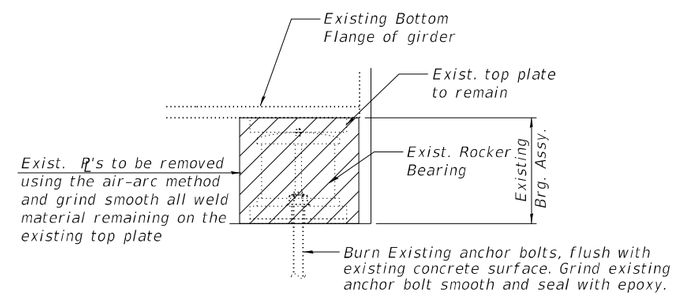

EXISTING BEARING REMOVAL DETAIL AT NORTH ABUTMENT

Cost included with Jack and Remove Existing Bearings.

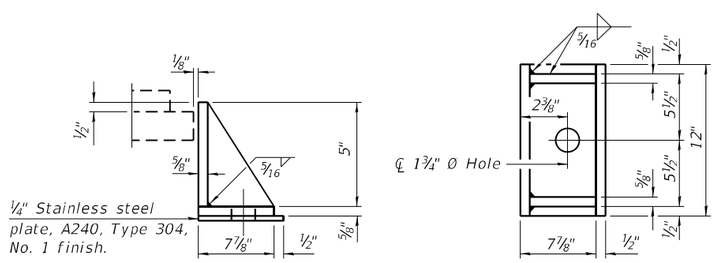

SIDE RETAINER

Equivalent rolled angle with stiffeners will be allowed in lieu of welded plates. Clip side retainers to allow for installation in field.

BILL OF MATERIAL

Item	Unit	Total
Elastomeric Bearing Assembly, Type I	Each	6
Anchor Bolts, 1 1/2"	Each	12
Jack and Remove Existing Bearings	Each	6

I-2E-1

6-15-2019

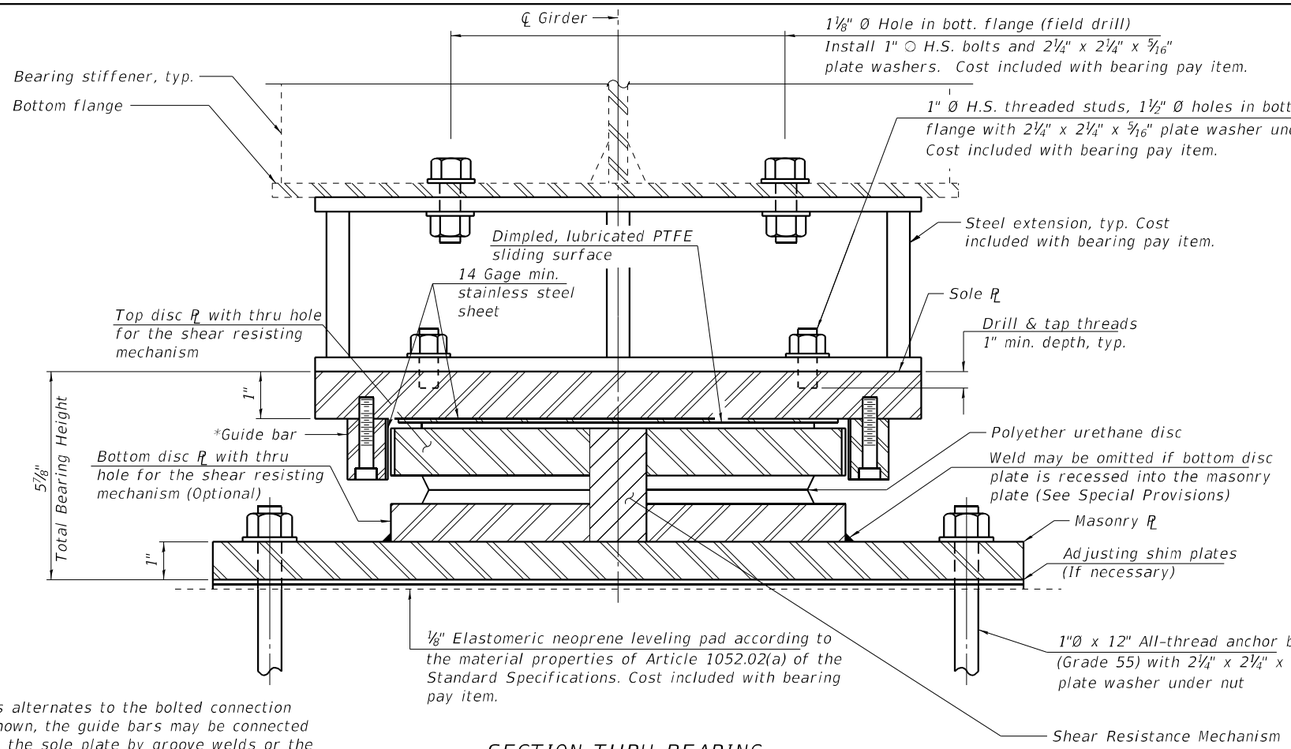

*As alternates to the bolted connection shown, the guide bars may be connected to the sole plate by groove welds or the guide bars and sole plate may be fabricated as a single piece.

SECTION THRU BEARING

DESIGN DATA

Unfactored Vertical Dead Load Reaction (R_{DC})	69.4 kips
Unfactored Vertical Wearing Surface Reaction (R_{DW})	8.8 kips
Unfactored Vertical Live Load without Impact Reaction (R_{LL})	82.8 kips
Maximum Strength or Extreme Event Lateral Reaction (H_u)	20.0 kips
Maximum Strength Limit State Rotation (Θ_u according to Article 14.4.2.2)	0.019 rad
Unfactored Design Thermal Movement from 50° F (ΔT)	1½ in.
Service I Factored Lateral Reaction	15.6 kips
Service I Rotation	0.016 rad
Strength I Factored Longitudinal Movement	1¼ in.
Service I Factored Vertical Reaction	161.0 kips
Strength I Factored Vertical Reaction	244.9 kips

Service I Load Factors = 1.0DC + 1.0DW + 1.00LL
Strength I Load Factors = 1.25DC + 1.5DW + 1.75LL + 1.2TU
Extreme Event Load Factors = 1.0EQ

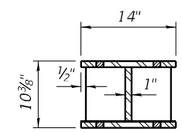

SECTION B-B

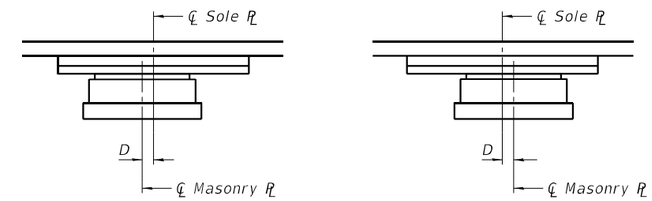

BELOW 50°F.
(Move masonry PL away from fixed bearing)

ABOVE 50°F.
(Move masonry PL toward fixed bearing)

SETTING ANCHOR BOLTS AT EXPANSION BEARING

D=⅛" per each 100' of expansion for every 15° temp. change from the normal temp. of 50° F.

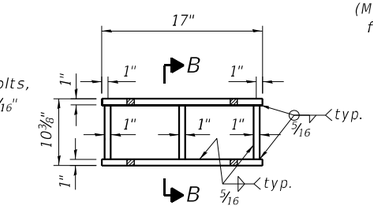

ELEVATION

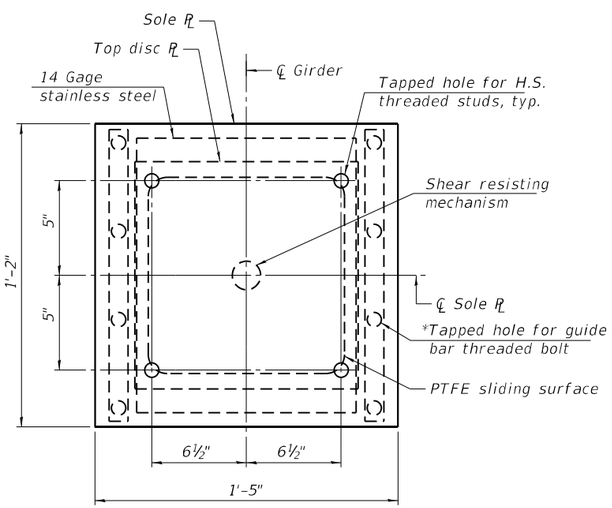

SOLE PLATE AND TOP DISC PLATE PLAN

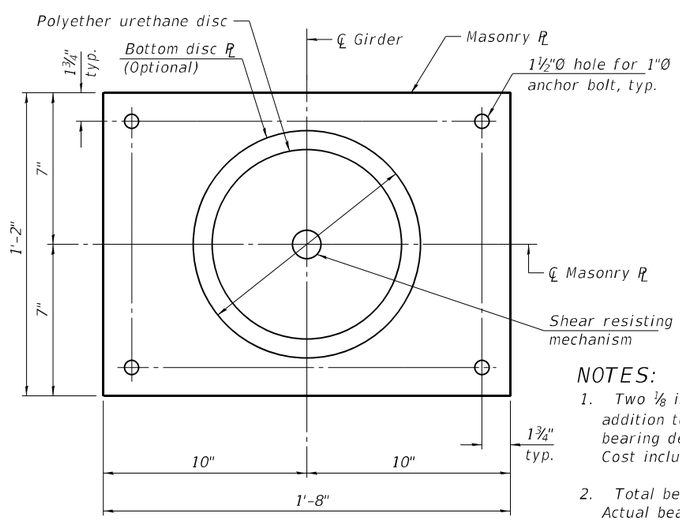

MASONRY PLATE AND BOTTOM DISC PLATE PLAN

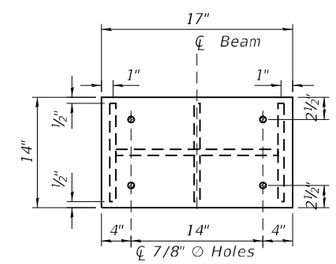

PLAN

**STEEL EXTENSION DETAILS

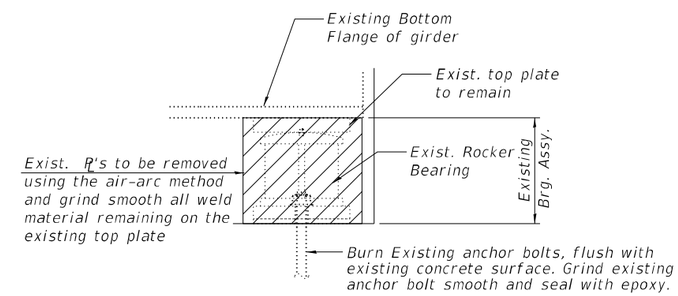

EXISTING BEARING REMOVAL DETAIL AT NORTH ABUTMENT

Cost included with Jack and Remove Existing Bearings.

NOTES:

1. Two ⅛ in. adjusting shims shall be provided for each bearing in addition to all other plates or shims and placed as shown on bearing details. Shim plates not included in total bearing height. Cost included with bearing pay item.

2. Total bearing height is estimated based on manufacturer data. Actual bearing height may differ from contract plans. The Contractor shall be responsible for verifying bearing heights and adjusting seat elevations, if required, prior to placing pier or abutment concrete.

3. The Structural Steel for the top & bottom bearing plates shall be AASHTO M270 Grade 50.

BILL OF MATERIAL

Item	Unit	Total
** High Load Multi-Rotational Bearings, Disc, Guided Expansion - 200k	Each	6
Anchor Bolts, 1"	Each	24
Jack and Remove Existing Bearings	Each	6

** The value specified in the pay item name is an approximate vertical load capacity that is used for letting and bidding purposes only. Exact bearing capacity will vary subject to final design.

MODEL: Default
FILE NAME: P:\Transportation\454 - IDOT PTB 198-023 D60WOA\CADD 50\054-0050-72220-033- Expansion Bearing Details.dgn

CDI — CIVIL DESIGN, INC. WBE / DBE — EFFINGHAM, IL — LICENSE #184.003222

USER NAME = $USER$	DESIGNED - RT	REVISED -	
	DRAWN - DS	REVISED -	
PLOT SCALE = $SCALE$	CHECKED - JS	REVISED -	
PLOT DATE = 3/27/2025	DATE - 3/2025	REVISED -	

STATE OF ILLINOIS
DEPARTMENT OF TRANSPORTATION

GUIDED EXPANSION HLMR DISC BEARING DETAILS
STRUCTURE NO. 054-0050

SCALE: | SHEET 33 OF 38 SHEETS | STA. | TO STA.

F.A.I. RTE.	SECTION	COUNTY	TOTAL SHEETS	SHEET NO.
155	(54-4HB)D	LOGAN	133	67
		CONTRACT NO. 72220		
		ILLINOIS	FED. AID PROJECT	

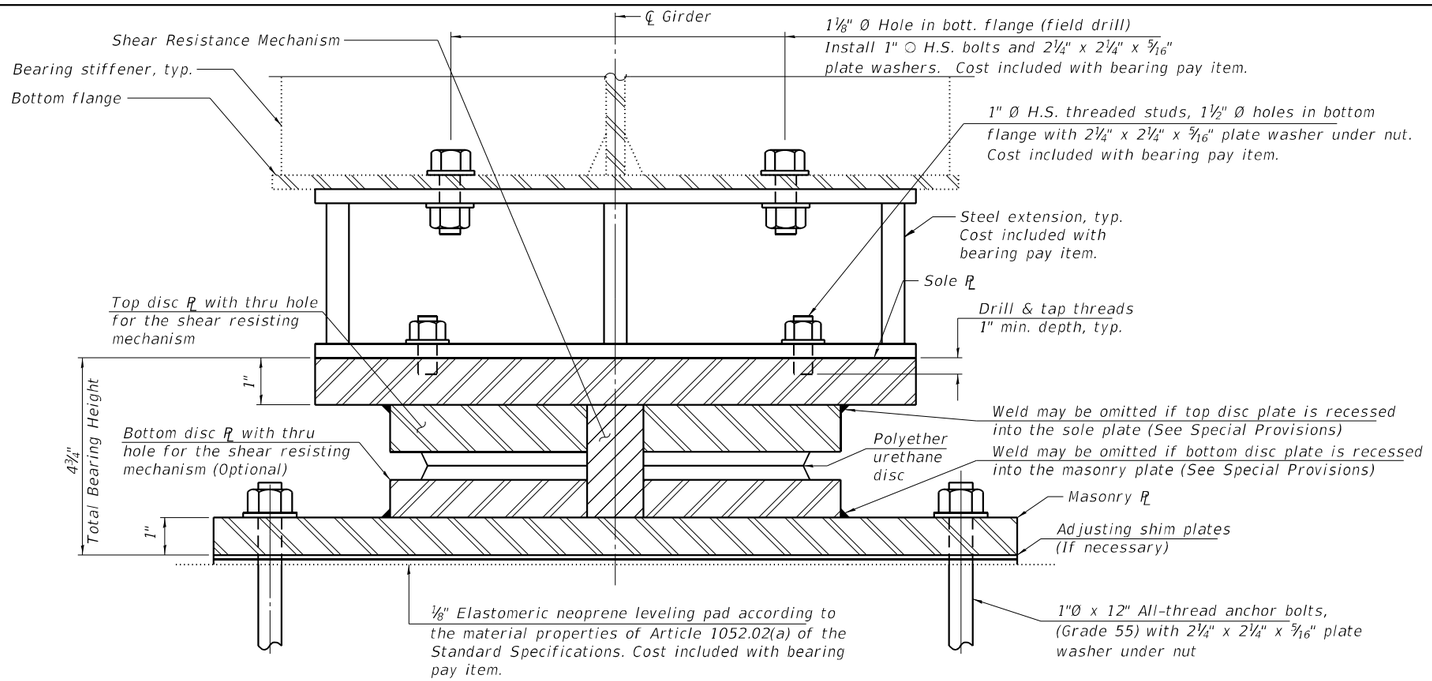

SECTION THRU BEARING

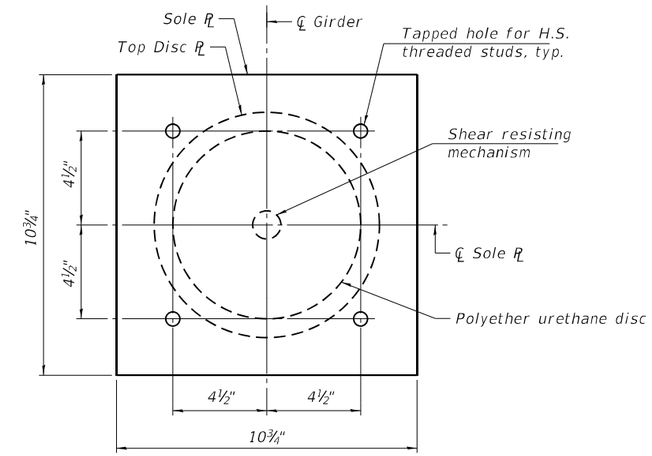

SOLE PLATE AND TOP DISC PLATE PLAN

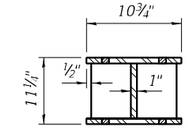

SECTION B-B

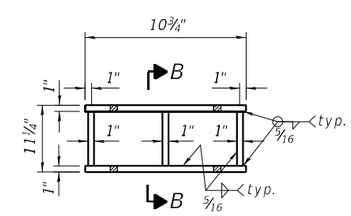

ELEVATION

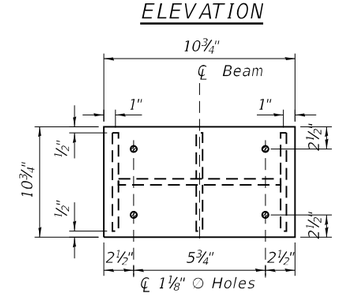

PLAN

*STEEL EXTENSION DETAILS

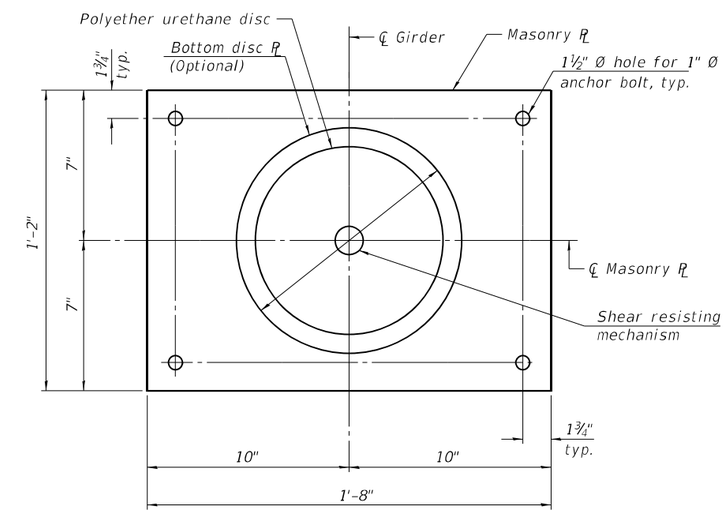

MASONRY PLATE AND
BOTTOM DISC PLATE PLAN

DESIGN DATA

Unfactored Vertical Dead Load Reaction (R_{DC})	69.4 kips
Unfactored Vertical Wearing Surface Reaction (R_{DW})	8.8 kips
Unfactored Vertical Live Load without Impact Reaction (R_{LL})	82.8 kips
Maximum Strength or Extreme Event Lateral Reaction (H_u)	20.0 kips
Maximum Strength Limit State Rotation (Θ_u according to Article 14.4.2.2)	0.019 rad
Service I Factored Lateral Reaction	15.6 kips
Service I Rotation	0.016 rad
Service I Factored Vertical Reaction	161.0 kips
Strength I Factored Vertical Reaction	244.9 kips

Service I Load Factors = 1.0DC + 1.0DW + 1.00LL
Strength I Load Factors = 1.25DC + 1.5DW + 1.75LL + 1.2TU
Extreme Event Load Factors = 1.0EQ

NOTES:

1. Two ⅛ in. adjusting shims shall be provided for each bearing in addition to all other plates or shims and placed as shown on bearing details. Shim plates not included in total bearing height. Cost included with bearing pay item.

2. Total bearing height is estimated based on manufacturer data. Actual bearing height may differ from contract plans. The Contractor shall be responsible for verifying bearing heights and adjusting seat elevations, if required, prior to placing pier or abutment concrete.

3. The Structural Steel for the top & bottom bearing plates shall be AASHTO M270 Grade 50.

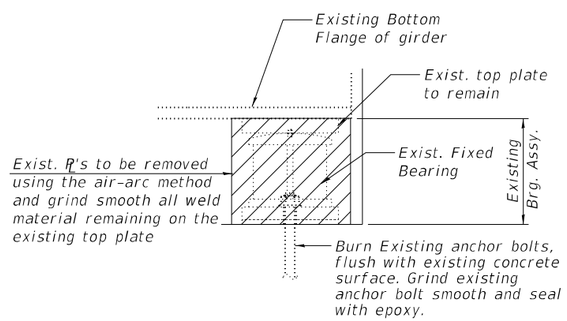

EXISTING BEARING REMOVAL
DETAIL AT NORTH ABUTMENT

Cost included with Jack and
Remove Existing Bearings.

BILL OF MATERIAL

	Item	Unit	Total
*	High Load Multi-Rotational Bearing, Disc, Fixed - 200k	Each	6
	Anchor Bolts, 1"	Each	24
	Jack and Remove Existing Bearings	Each	6

* The value specified in the pay item name is an approximate vertical load capacity that is used for letting and bidding purposes only. Exact bearing capacity will vary subject to final design.

MODEL: Default
FILE NAME: P:\Transportation\4854 - IDOT PTB 198-073 D6\D0W04\CADD 56\054-0050-72220-0034- Fixed Bearing Details.dgn

CIVIL DESIGN, INC.
WBE / DBE
EFFINGHAM, IL
LICENSE #184.003222

USER NAME = $USER$	DESIGNED - RT	REVISED -
	DRAWN - DS	REVISED -
PLOT SCALE = $SCALE$	CHECKED - JS	REVISED -
PLOT DATE = 3/27/2025	DATE - 3/2025	REVISED -

STATE OF ILLINOIS
DEPARTMENT OF TRANSPORTATION

FIXED HLMR DISC BEARING DETAILS
STRUCTURE NO. 054-0050

SCALE: | SHEET 34 OF 38 SHEETS | STA. | TO STA.

F.A.I. RTE.	SECTION	COUNTY	TOTAL SHEETS	SHEET NO.
155	(54-4HB)D	LOGAN	133	68
		CONTRACT NO. 72220		
		ILLINOIS FED. AID PROJECT		

Notes:
All dimensions shall remain the same as shown on superstructure details, except dimension A which is to be revised as shown. Additional concrete needed to revise dimension A = 0.00348 cu. yds./ft. for 39" and 44" parapets.
Place full depth aluminum sheets as shown on superstructure details.
Replace all cork joint filler locations with a full thickness saw cut.
Steel superstructure shown. Other superstructure types similar.

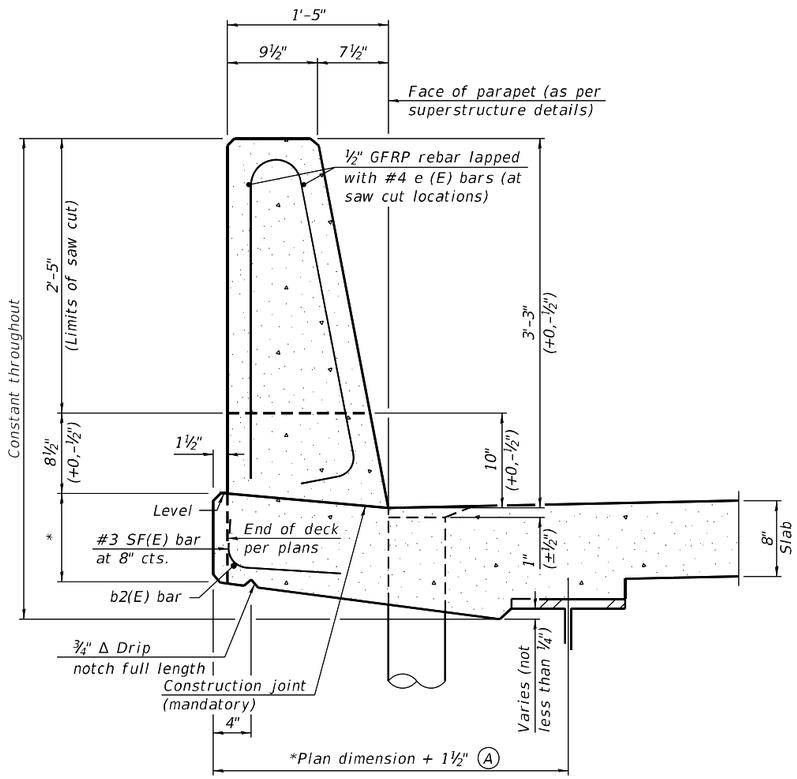

39" CONSTANT-SLOPE PARAPET SECTION

(Showing dimensions, d(E), and ½" Ø GFRP rebar)

*See Superstructure Details.

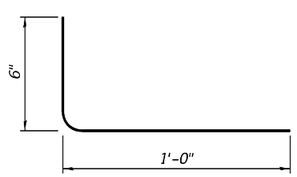

SF(E) BAR

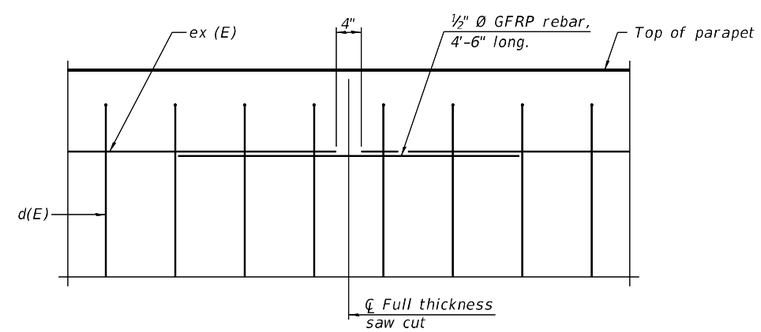

GFRP REBAR STIFFENING DETAIL

(Place as shown in parapet section at each parapet joint location.)

SFP 39-44 11-1-2022

MODEL: Default
FILE NAME: P:\Transportation\4854 - IDOT PTB 198-023 D600\W04\CADD_50\054-0050-7220\4035-Parapet_Slipform_Opt.dgn

CDI CIVIL DESIGN, INC. WBE / DBE EFFINGHAM, IL LICENSE #184.003222

USER NAME = $USER$	DESIGNED -	REVISED -	
	DRAWN -	REVISED -	
PLOT SCALE = $SCALE$	CHECKED -	REVISED -	
PLOT DATE = 12/19/2024	DATE -	REVISED -	

STATE OF ILLINOIS
DEPARTMENT OF TRANSPORTATION

CONCRETE PARAPET SLIPFORMING OPTION
STRUCTURE NO. 054-0050

SCALE: SHEET 35 OF 63 SHEETS STA. TO STA.

F.A.I. RTE.	SECTION	COUNTY	TOTAL SHEETS	SHEET NO.
155	(54-4HB)D	LOGAN	133	69
		CONTRACT NO. 72220		
	ILLINOIS	FED. AID PROJECT		

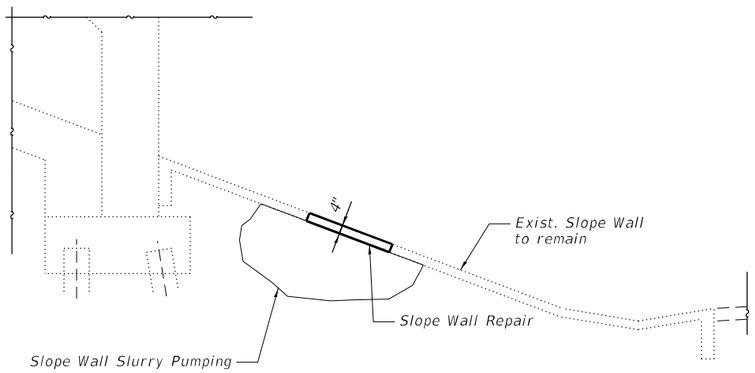

SECTION A-A

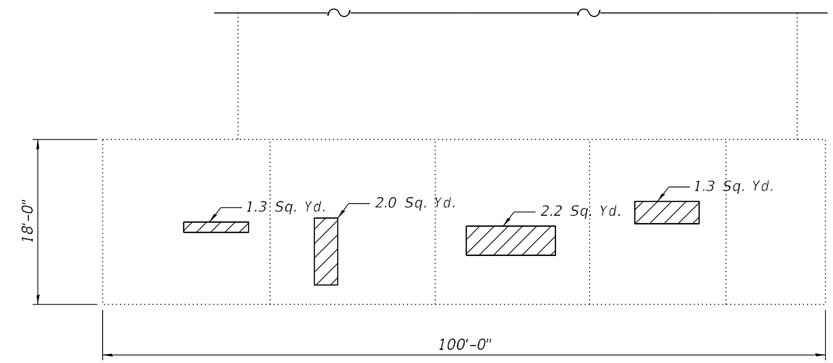

NORTH SLOPEWALL

Looking South

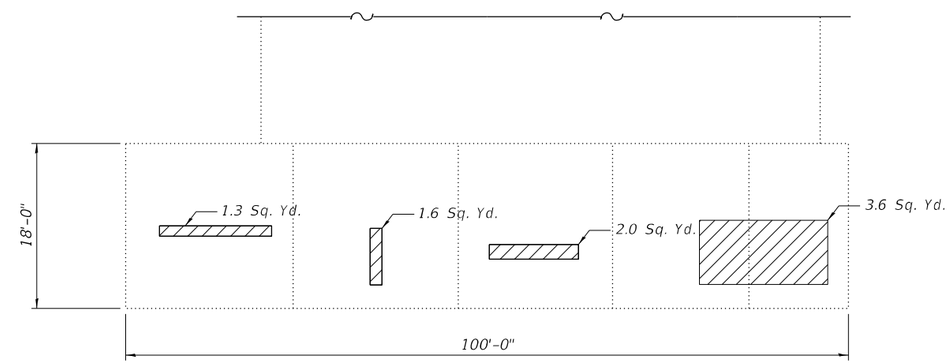

SOUTH SLOPEWALL

Looking North

Slope Wall Repair

BILL OF MATERIAL

ITEM	UNIT	TOTAL
Slope Wall Repair	Sq. Yd.	15.3
Slope Wall Slurry Pumping	Cu. Yd.	3.4

Slope Wall Slurry Pumping pay item estimates 2' thick slurry material below each repair area.

MODEL: Default
FILE NAME: P:\Transportation\4854 - IDOT PTB 198-093 D6\DWG\CADD 50\054-0050-72220-036- Slope Wall Repair.dgn

CIVIL DESIGN, INC. WBE / DBE EFFINGHAM, IL LICENSE #184.003222	USER NAME = $USER$	DESIGNED -	REVISED -
		DRAWN -	REVISED -
	PLOT SCALE = $SCALE$	CHECKED -	REVISED -
	PLOT DATE = 12/19/2024	DATE -	REVISED -

STATE OF ILLINOIS
DEPARTMENT OF TRANSPORTATION

SLOPE WALL REPAIR DETAILS
STRUCTURE NO. 054-0050

SCALE: | SHEET 36 OF 63 SHEETS | STA. | TO STA.

F.A.I. RTE.	SECTION	COUNTY	TOTAL SHEETS	SHEET NO.
155	(54-4HB)D	LOGAN	133	70
		CONTRACT NO. 72220		
		ILLINOIS	FED. AID PROJECT	

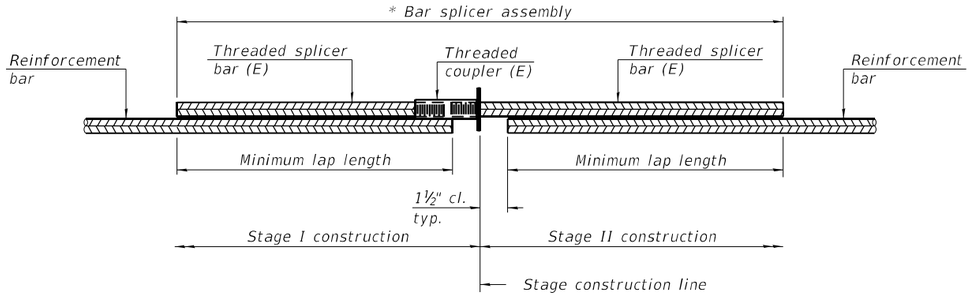

STANDARD BAR SPLICER ASSEMBLY PLAN

Only bar splicer assemblies as presented on the approved QPL list may be used.

Threaded splicer bar length = min. lap length + 1½" + thread length

* Epoxy not required on Bar Splicer Assembly components used in conjunction with black bars.

Location	Bar size	No. assemblies required	Minimum lap length
Deck Slab	#5	399	3'-6"
Deck Slab	#6	10	3'-7"
S. Approach Slab	#5	46	3'-6"
S. Approach Slab	#8	60	4'-9"
N. Approach Slab	#5	46	3'-6"
N. Approach Slab	#8	60	4'-9"
S. Approach Ftg.	#5	20	3'-6"
N. Approach Ftg.	#5	20	3'-6"
S. Approach Span	#5	126	3'-6"
S. Approach Span	#6	8	3'-7"
N. Approach Span	#5	122	3'-6"
N. Approach Span	#6	8	3'-7"
S. Approach Span Diaph.	#5	10	3'-6"
S. Approach Span Diaph.	#6	6	3'-7"
N. Approach Span Diaph.	#5	10	3'-6"
N. Approach Span Diaph.	#6	6	3'-7"

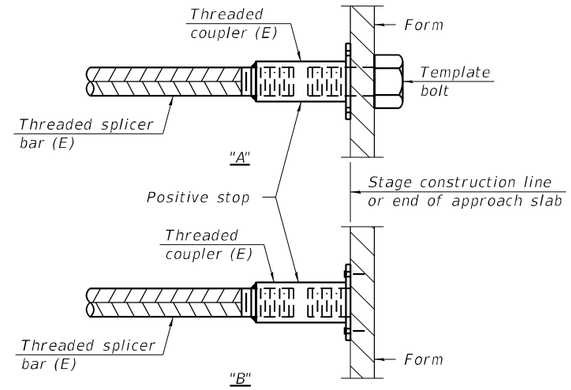

INSTALLATION AND SETTING METHODS

"A" : Set bar splicer assembly by means of a template bolt.
"B" : Set bar splicer assembly by nailing to wood forms or cementing to steel forms.
(E) : Indicates epoxy coating.

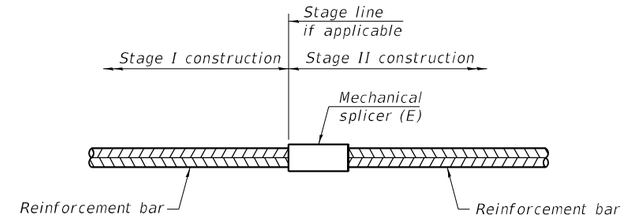

STANDARD MECHANICAL SPLICER

Location	Bar size	No. assemblies required

Notes:
Splicer bars shall be deformed with threaded ends and have a minimum 60 ksi yield strength.
All reinforcement shall be lapped and tied to the splicer bars.
Bar splicer assemblies shall be epoxy coated according to the requirements for reinforcement bars. See Section 508 of the Standard Specifications.
See approved list of bar splicer assemblies and mechanical splicers for alternatives.

BSD-1 2-1-2023

MODEL: Default
FILE NAME: P:\Transportation\4854 - IDOT PTB 198-023 D6\DWG\CADD S6\054-0050-72220-037-Splicer Assembly.dgn

CIVIL DESIGN, INC. WBE / DBE
EFFINGHAM, IL
LICENSE #184.003222

USER NAME = $USER$	DESIGNED -	REVISED -
	DRAWN -	REVISED -
PLOT SCALE = $SCALE$	CHECKED -	REVISED -
PLOT DATE = 12/19/2024	DATE -	REVISED -

STATE OF ILLINOIS
DEPARTMENT OF TRANSPORTATION

BAR SPLICER ASSEMBLY AND MECHANICAL SPLICER DETAILS
STRUCTURE NO. 054-0050

SCALE: SHEET 37 OF 63 SHEETS STA. TO STA.

F.A.I. RTE.	SECTION	COUNTY	TOTAL SHEETS	SHEET NO.
155	(54-4HB)D	LOGAN	133	71
		CONTRACT NO. 72220		
	ILLINOIS	FED. AID PROJECT		

Existing Structure: S.N. 054-0050. The existing structure is a 3-span vaulted abutment bridge. ~~consisting of one welded steel ℄ girder main span and two PPC-I Beam approach spans.~~ The original deck has a microsilica overlay. The original structure was built in 1973 as Section 54-4HB. Both abutment joints were replaced with neoprene joints in 1999. Traffic will be maintained utilizing stage construction.

No salvage.

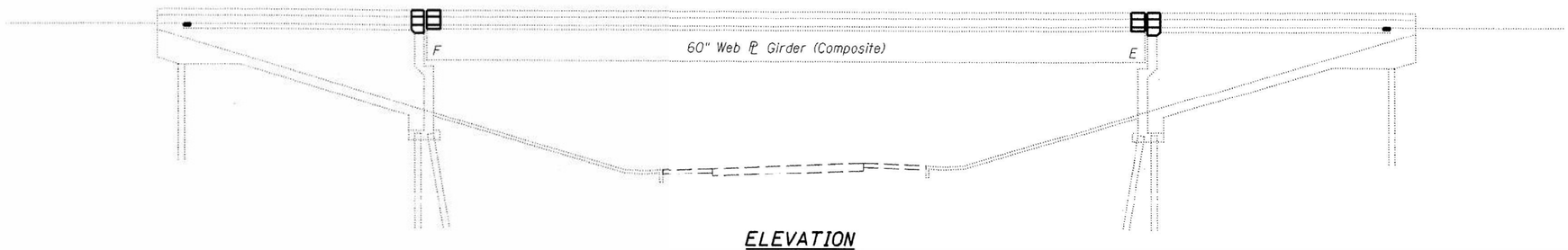

ELEVATION

SCOPE OF WORK

Remove & replace polymer concrete at ends of approach spans.

Remove neoprene expansion joint and concrete at both abutments.

Install new concrete and strip seal joint at both abutments.

Extend existing floor drains near south abutment.

GENERAL NOTES

All work to be completed utilizing Traffic Control and Protection Standards 701400 and 701402 and the details included in the plans.

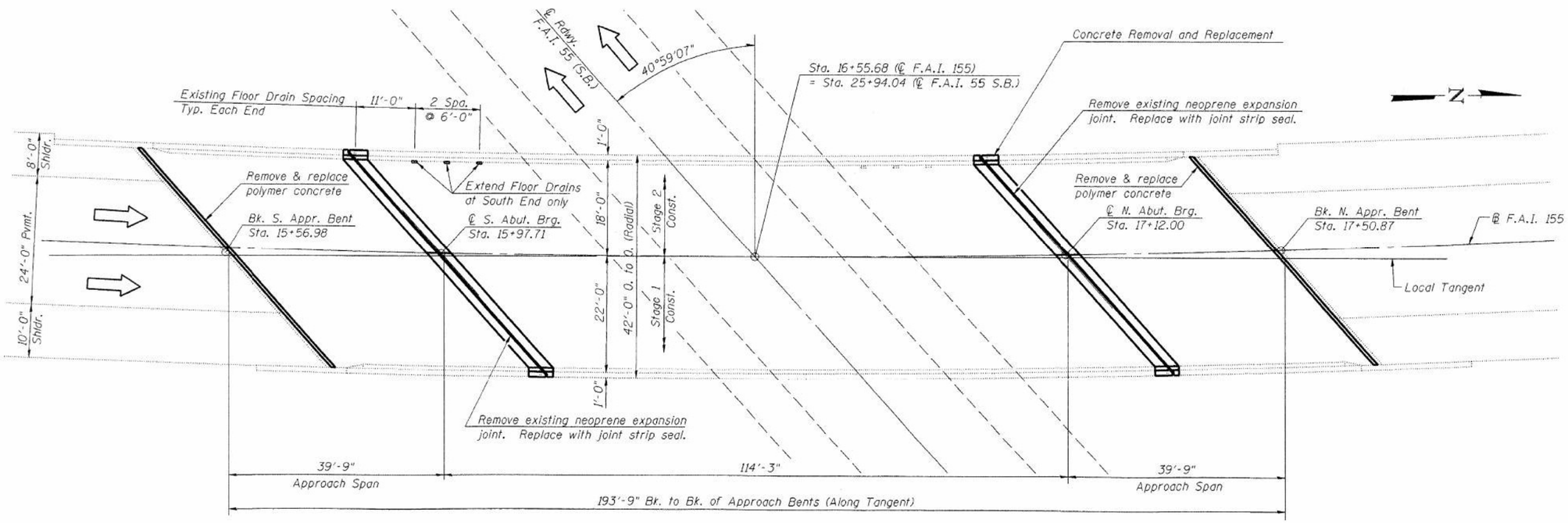

PLAN

FOR INFORMATION ONLY

MICHAEL D. CUMMINS 081-004822 LICENSED STRUCTURAL ENGINEER OF SPRINGFIELD ILLINOIS

Michael D. Cummins 10/3/11

(Expires 11/30/2012)

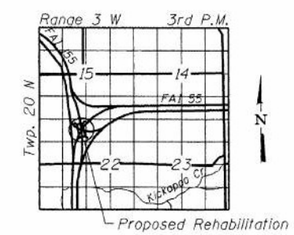

LOCATION SKETCH

GENERAL PLAN
I-155 RAMP (N.B.)
OVER I-55 (S.B.)
SECTION D6 LOGAN CO BR 2011
LOGAN COUNTY
STATION 16+55.68
STRUCTURE NO. 054-0050

1-1-2020

MODEL: Default
FILE NAME: P:\Transportation\4854 - IDOT PTB 198-073 D6\D6WO04\CADD SG\054-0050-72220-038-EXISTING PLANS - Copy (1).dgn

CDI CIVIL DESIGN, INC. WBE / DBE EFFINGHAM, IL LICENSE #184.003222	USER NAME = $USER$	DESIGNED -	REVISED -	STATE OF ILLINOIS DEPARTMENT OF TRANSPORTATION	EXISTING PLANS STRUCTURE NO. 054-0050	F.A.I. RTE.	SECTION	COUNTY	TOTAL SHEETS / SHEET NO.
		DRAWN -	REVISED -			155	(54-4HB)D	LOGAN	133 / 72
	PLOT SCALE = $SCALE$	CHECKED -	REVISED -					CONTRACT NO. 72220	
	PLOT DATE = 12/19/2024	DATE -	REVISED -		SCALE: SHEET 38 OF 63 SHEETS STA. TO STA.		ILLINOIS	FED. AID PROJECT	

B.M. NO.27, 6" BOAT SPIKE IN ROUGH LEAF HACKBERRY, 880' LT. STA.26+30, ℄ RDWY. "F", ELEV. 571.879

STATE OF ILLINOIS [redacted]

ROUTE NO.	SECTION	COUNTY	TOTAL SHEETS	SHEET NO.
S.B.I.L. F.A.I-55	54-4HB	LOGAN	63	14
FED. ROAD DIST. NO. 7		ILLINOIS	FED. AID PROJECT	

SHEET NO. 1
36 SHEETS

CURVE DATA
(Rdwy. "B")

P.I. STA. 10+68.62
Δ = 30°-50'-42"
D = 1°-59'-30"
R = 2876.79'
T = 793.62'
L = 1548.71'
E = 107.46'
S.E. = 0.060'/'
P.C. STA. 2+75.00
P.T. STA. 18+23.71

CURVE DATA
(RDWY. "C")

P.I. STA. 28+90.64
Δ = 90°-30'-53"
D = 2°-00'
R = 2864.79'
T = 2890.64'
L = 4525.74'
E = 1204.95'
S.E. = 0.052'/'
P.C. STA. 0+00
P.T. STA. 45+25.74

STATION 16+55.68 RDWY. "B"
BUILT 197 BY
STATE OF ILLINOIS
F.A.I. RT. 55 SEC. 54-4HB
F.A. PROJ. I-55-4(90)
LOADING HS20 & ALT.

NAME PLATE
See Std. 2113

GENERAL NOTES

All reinforcement bars shall be lapped 24 diameters unless otherwise shown.

Fasteners shall be high strength bolts. Bolts 1" ø; open holes 1 1/16" ø unless otherwise noted. Bolts 3/4"ø, open holes 13/16" ø unless otherwise noted.

Calculated weight of Structural Steel = 200,880 lbs.

The Basic Lead Silica Chromate paint system shall be used for shop and field painting of structural steel.

Anchor bolts shall be set before bolting cross frames over supports.

Slope wall shall be reinforced with welded wire fabric 6"x6" mesh, weighing 58# per 100 sq.ft.

Concrete piles at abutments shall be driven in holes precored through the embankment in accordance with Article 513.09(c) of the Standard Specs.

The embankment configuration shown shall be the minimum embankment that must be constructed prior to construction of the abutments.

The concrete rail section above the mandatory construction joint at the top of the slab shall be constructed of Class X Concrete, except the aggregates shall conform to the requirements of Handrail Concrete.

Protective Coat shall not be applied to surfaces to which Coal Tar Interlayer Protective Coat is applied.

Field welding of construction accessories will not be permitted to the bottom flange of girders. Field welding in other areas will be permitted only when approved by the Engineer.

The Contractor shall drive 2 concrete test piles in a permanent location, one at the South Appr. Bent and one at the North Abut. as directed by the Engineer before ordering the remainder of piles.

For limits of slopewall see sheet #19.

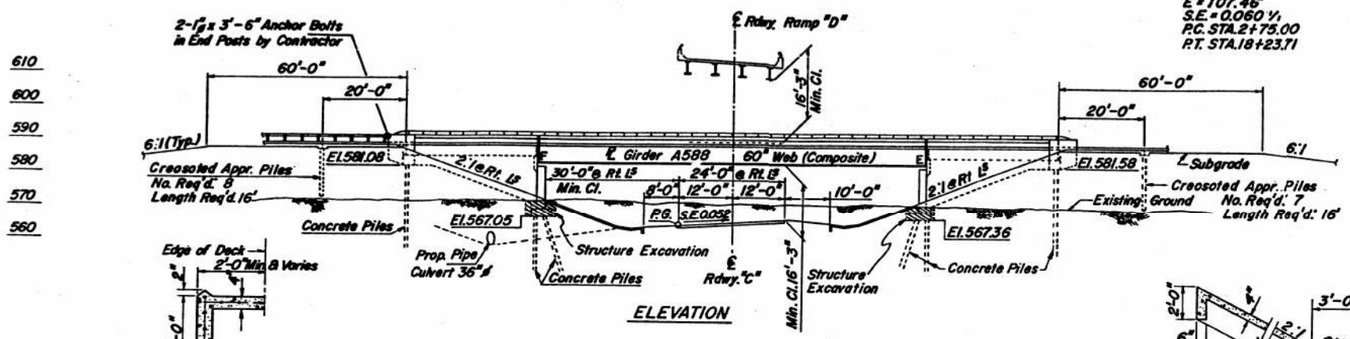

ELEVATION

SECTION A-A

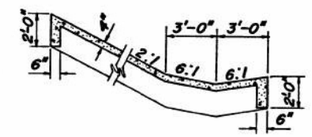

SEC. THRU SLOPEWALL
(For Slopewall Layout, See Sheet #19)

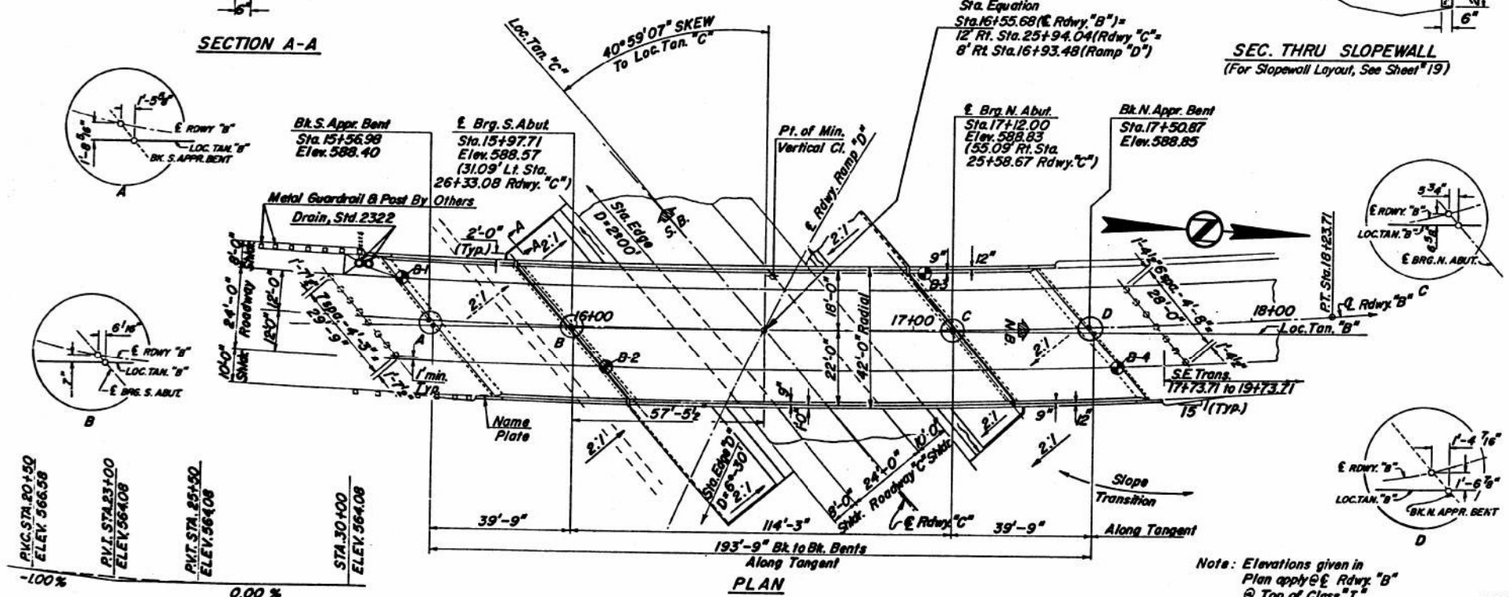

PLAN

Note: Elevations given in Plan apply @ ℄ Rdwy. "B" @ Top of Class "I".

TOTAL BILL OF MATERIALS

	ITEM	UNIT	SUPER	SUB	TOTAL
	Structure Excavation	Cu. Yds.		131	131
**	Protective Coat	Sq. Yds.	162		162
	Class X Concrete	Cu. Yds.	291.3	308.5	599.8
	Structural Steel *	Lump Sum	1		1
	Stud Shear Connectors	Each	1386		1386
	Aluminum Railing	Lin. ft.	414		414
	Reinforcement Bars	Lbs.	64,580	25,800	90,380
	Name Plate	Each	1		1
	Slope Wall (4")	Sq. Yds.		725	725
	Concrete Piles	Lin. ft.		2433	2433
	Test Piles (Concrete)	Each		2	2
	Creosoted Piles (Up to 20')	Lin. ft.		240	240
**	Coal Tar Interlayer Protective Coat	Sq. Yds.	822		822
**	Bituminous Conc. Sur. Crse. Class I	Tons.	67		67
	Preformed Joint Sealer	Lin. ft.	111		111
	Furnishing & Erecting Precast Prestressed Concrete I-Beams, 36"	Lin. ft.	288		288

* Calculated weight of Structural Steel = 200,880 lbs.
** These items will be constructed in Section 54-4

DESIGN STRESSES

FIELD UNITS

fc = 1200 psi. (Deck Slab)
fc = 1,400 psi. (Curb, Parapet & Sub)
fs = 20,000 psi. (Reinf.)
fs = 27,000 psi. (Struct.) A-588
fs = 20,000 psi. (Struct.) A-36
vc = 75 psi. (Plgs.)
n = 10

PRECAST PRESTRESSED UNITS

f'c = 5,000 psi.
f'ci = 4,000 psi.
f's = 248,000 psi. (Strands 7/16" ø)
fsi = 173,600 psi. (Strands 7/16" ø)

Allow 25/□' for Initial Class I Surf.
Allowable ℄ Deflection L/1200 Comp.
Design Specifications 1969 AASHO (as applicable)
Future W.S. = 25# Sq. Ft.

LOADING HS20-44 & ALT.

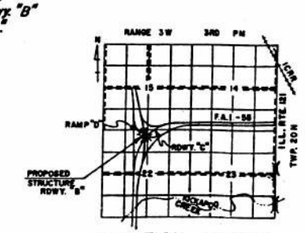

LOCATION SKETCH

DESIGNED	G.E.P.
CHECKED	D.V.K.
DRAWN	R.H.H.
CHECKED	G.E.P.

EXAMINED 19
PASSED
APPROVED

1-1-2020

FOR INFORMATION ONLY

GENERAL PLAN & ELEVATION
SUPP'L. FREEWAY N.B., (RDWY. "B")
over F.A.I. RTE. 55, S.B., (RDWY. "C")
LOGAN COUNTY SEC. 54-4HB
STA. 16+55.68 RDWY. "B" =
STA. 25+94.04-12' RT. RDWY. "C"

CDI CIVIL DESIGN, INC. WBE / DBE EFFINGHAM, IL LICENSE #184.003222

USER NAME = $USER$	DESIGNED -	REVISED -	
	DRAWN -	REVISED -	
PLOT SCALE = $SCALE$	CHECKED -	REVISED -	
PLOT DATE = 12/19/2024	DATE -	REVISED -	

STATE OF ILLINOIS
DEPARTMENT OF TRANSPORTATION

EXISTING PLANS
STRUCTURE NO. 054-0050

SCALE: SHEET 39 OF 63 SHEETS STA. TO STA.

F.A.I. RTE.	SECTION	COUNTY	TOTAL SHEETS	SHEET NO.
155	(54-4HB)D	LOGAN	133	73
		CONTRACT NO. 72220		
		ILLINOIS	FED. AID PROJECT	

MODEL: Default
FILE NAME: P:\Transportation\4854 - IDOT PTB 198-023 06\DWG\CADD_50\054-0050-72220-039-EXISTING PLANS - Copy (2).dgn

ROUTE NO.	SECTION	COUNTY	TOTAL SHEETS	SHEET NO.
I. B. L. F. A. I 55	54-4HB	LOGAN	63	15
FED. ROAD DIST. NO. 7		ILLINOIS	FED. AID PROJECT	

SHEET NO. 2
36 SHEETS

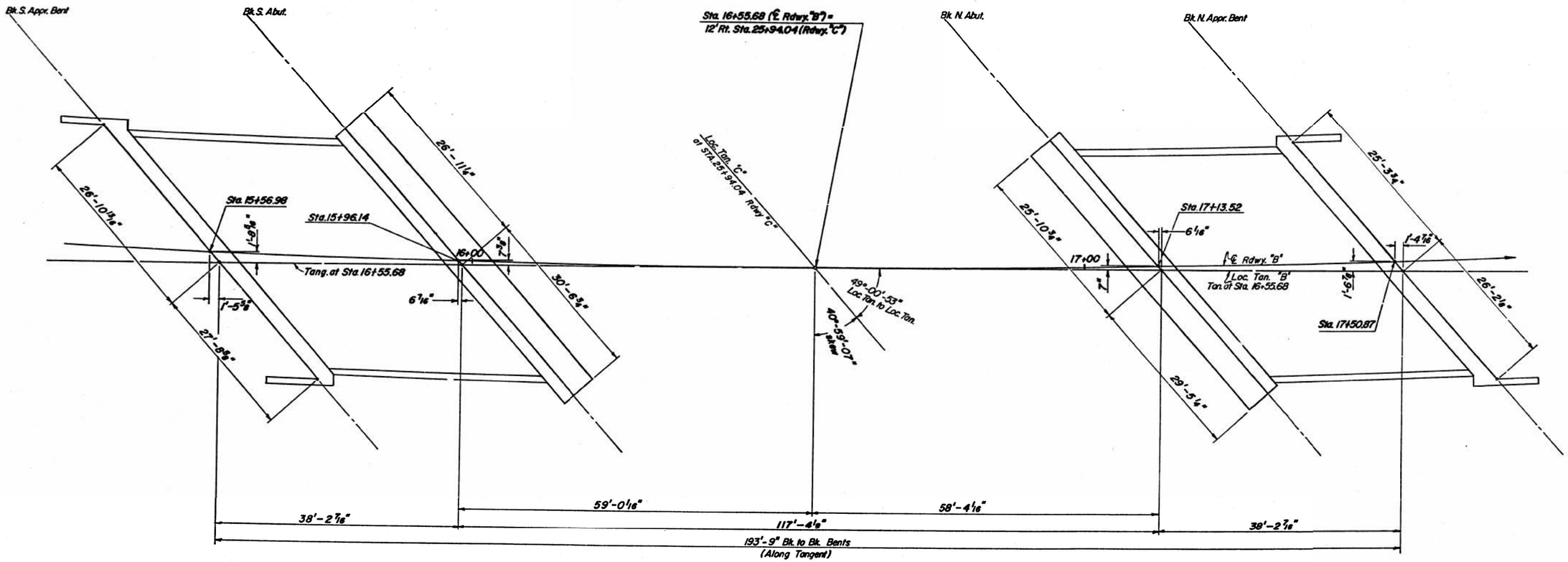

NOTE: Substructure elements are parallel to Loc. Tan. "C"

DESIGNED	G.E.P.
CHECKED	D.V.K.
DRAWN	J.T.
CHECKED	G.E.P.

19
EXAMINED
DIRECTOR OF BRIDGE AND TRAFFIC STRUCTURES
PASSED
ENGINEER OF DESIGN
APPROVED
CHIEF HIGHWAY ENGINEER

FOR INFORMATION ONLY

FOOTING LAYOUT
F.A.I.-55 SEC. 54-4HB
RDWY. "B"
LOGAN COUNTY
STA. 16+55.68

1-1-2020

MODEL: Default
FILE NAME: P:\Transportation\4854 - IDOT PTB 198-023 D6\IDOT\CADD\50\054-0050-72220-040-EXISTING PLANS - Copy (3).dgn

CDI
CIVIL DESIGN, INC.
WBE / DBE
EFFINGHAM, IL
LICENSE #184.003222

USER NAME = $USER$	DESIGNED -	REVISED -
	DRAWN -	REVISED -
PLOT SCALE = $SCALE$	CHECKED -	REVISED -
PLOT DATE = 12/19/2024	DATE -	REVISED -

STATE OF ILLINOIS
DEPARTMENT OF TRANSPORTATION

EXISTING PLANS
STRUCTURE NO. 054-0050

SCALE: | SHEET 40 OF 63 SHEETS | STA. | TO STA.

F.A.I. RTE.	SECTION	COUNTY	TOTAL SHEETS	SHEET NO.
155	(54-4HB)D	LOGAN	133	74
		CONTRACT NO. 72220		
		ILLINOIS	FED. AID PROJECT	

STATE OF ILLINOIS
[redacted]

ROUTE NO	SECTION	COUNTY	TOTAL SHEETS	SHEET NO
S.B.I. F.A.I 55	54-4HB	LOGAN	63	16
FED. ROAD DIST. NO		ILLINOIS	FED. AID PROJECT	

SHEET NO. 3
36 SHEETS

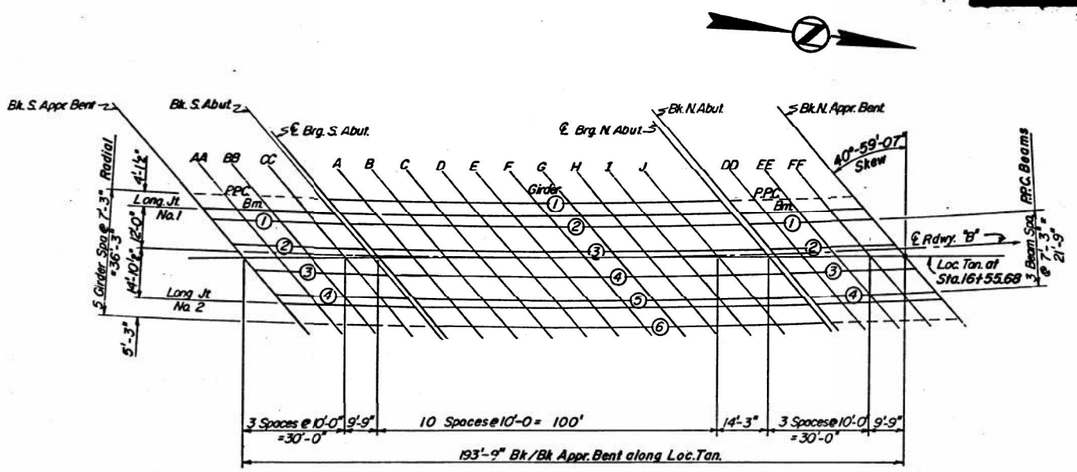

PLAN

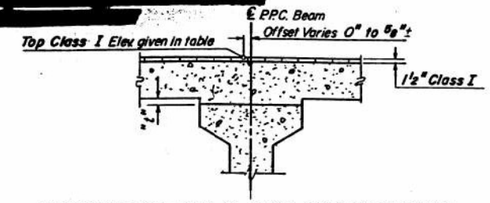

TO DETERMINE "t": AFTER ALL PRECAST PRESTRESSED BEAMS HAVE BEEN ERECTED, ELEVATIONS OF THE TOP FLANGES OF THE BEAMS SHALL BE TAKEN AT INTERVALS SHOWN BELOW. THESE ELEVATIONS SUBTRACTED ALGEBRAICALLY FROM THE "THEORETICAL GRADE ELEVATIONS ADJUSTED FOR DEAD LOAD DEFLECTIONS SHOWN BELOW, MINUS SLAB THICKNESS + 1 1/2" CLASS I, EQUALS THE FILLET HEIGHTS " t ". A POSITIVE VALUE OF " t " EQUALS THE FILLET HEIGHT ABOVE THE TOP OF THE BEAM. A NEGATIVE VALUE OF " t ", NOT TO EXCEED 1/2", EQUALS THE EMBEDMENT OF THE BEAM ABOVE THE THEORETICAL BOTTOM OF SLAB ELEVATION.

FILLET HEIGHTS

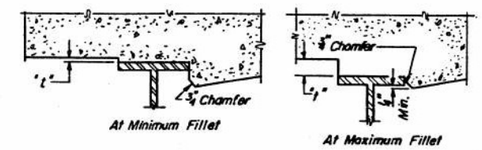

TO DETERMINE "t": AFTER ALL STRUCTURAL STEEL HAS BEEN ERECTED, ELEVATIONS OF THE TOP FLANGES OF THE BEAMS SHALL BE TAKEN AT INTERVALS SHOWN BELOW. THESE ELEVATIONS SUBTRACTED FROM THE "THEORETICAL GRADE ELEVATIONS ADJUSTED FOR DEAD LOAD DEFLECTION" SHOWN BELOW, MINUS SLAB THICKNESS + 1 1/2" CLASS I, EQUALS THE FILLET " t " ABOVE TOP FLANGE OF BEAMS.

FILLET HEIGHTS

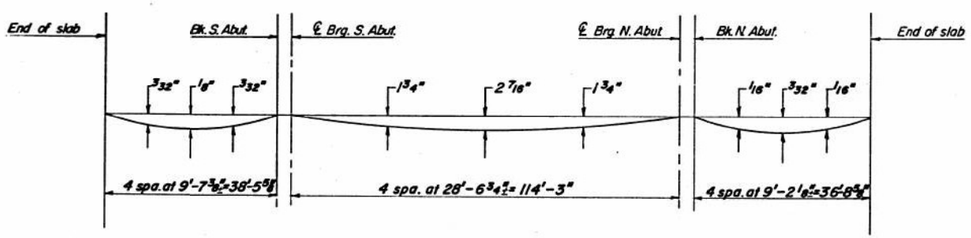

DEAD LOAD DEFLECTION DIAGRAM

(Includes weight of concrete and Class I Surfacing)

Note: The above deflections are not to be used in the field if the engineer is working from the grade elevations adjusted for dead load deflections as shown on sheets #38 & #4

NOTE: Offsets given in table are from ℄ Rdwy "B".

Location		Station	Offset	Theoretical Grade Elevations	Theoretical Grade Elevations Adjusted For Dead Load Deflection
Bk. S. Appr. Bent	L.J.1	1545.742	-12.000	587.621	587.621
	PPC. BM.1	1548.681	-8.875	587.823	587.823
	PPC. BM.2	1555.466	-1.625	588.291	588.291
	CENTER	1556.960	0.000	588.396	588.396
	PPC. BM.3	1562.202	5.625	588.757	588.757
	PPC. BM.4	1568.889	12.875	589.222	589.222
	L.J.2	1570.726	14.875	589.350	589.350
AA	L.J.1	1556.119	-12.000	587.671	587.682
	PPC. BM.1	1559.037	-8.875	587.873	587.883
	PPC. BM.2	1565.773	-1.625	588.338	588.349
	CENTER	1567.276	0.000	588.443	588.453
	PPC. BM.3	1572.461	5.625	588.803	588.813
	PPC. BM.4	1579.101	12.875	589.266	589.276
	L.J.2	1580.924	14.875	589.394	589.404
BB	L.J.1	1566.461	-12.000	587.719	587.733
	PPC. BM.1	1569.359	-8.875	587.919	587.933
	PPC. BM.2	1576.047	-1.625	588.383	588.397
	CENTER	1577.539	0.000	588.487	588.501
	PPC. BM.3	1582.687	5.625	588.846	588.860
	PPC. BM.4	1589.279	12.875	589.307	589.321
	L.J.2	1591.090	14.875	589.434	589.448
CC	L.J.1	1576.769	-12.000	587.764	587.773
	PPC. BM.1	1579.646	-8.875	587.963	587.972
	PPC. BM.2	1586.266	-1.625	588.426	588.435
	CENTER	1587.768	0.000	588.529	588.538
	PPC. BM.3	1592.879	5.625	588.886	588.895
	PPC. BM.4	1599.425	12.875	589.346	589.355
	L.J.2	1601.223	14.875	589.472	589.482
Bk. S. Abut.	L.J.1	1585.201	-12.000	587.799	587.799
	PPC. BM.1	1588.061	-8.875	587.998	587.998
	PPC. BM.2	1594.663	-1.625	588.458	588.458
	CENTER	1596.136	0.000	588.561	588.561
	PPC. BM.3	1601.217	5.625	588.917	588.917
	PPC. BM.4	1607.725	12.875	589.375	589.375
	L.J.2	1609.513	14.875	589.502	589.502

TOP OF CLASS "I" ELEVATIONS
SUPPL. FREEWAY N.B. (RDWY. "B")
over F.A.I. RTE 55, S.B. (RDWY. "C")
LOGAN COUNTY SEC. 54-4HB.
STA. 16+55.68 RDWY. "B"±
STA. 25+94.04-12' RT. RDWY. "C"

FOR INFORMATION ONLY

DESIGNED	G.E.P.
CHECKED	D.V.K.
DRAWN	E.S. & J.T.
CHECKED	G.E.P.

19
EXAMINED
ENGINEER OF BRIDGES & TRAFFIC STRUCTURES
PASSED
ENGINEER OF DESIGN
APPROVED
CHIEF HIGHWAY ENGINEER

1-1-2020

MODEL: Default
FILE NAME: P:\Transportation\4854 - IDOT PTB 198-023 D600W04\CADD-50054-0050-72220-041-EXISTING PLANS - Copy (4).dgn

CDI
CIVIL DESIGN, INC.
WBE / DBE
EFFINGHAM, IL
LICENSE #184.003222

USER NAME = $USER$	DESIGNED -	REVISED -
	DRAWN -	REVISED -
PLOT SCALE = $SCALE$	CHECKED -	REVISED -
PLOT DATE = 12/19/2024	DATE -	REVISED -

STATE OF ILLINOIS
DEPARTMENT OF TRANSPORTATION

EXISTING PLANS
STRUCTURE NO. 054-0050

SCALE: | SHEET 41 OF 63 SHEETS | STA. | TO STA.

F.A.I. RTE.	SECTION	COUNTY	TOTAL SHEETS	SHEET NO.
155	(54-4HB)D	LOGAN	133	75
		CONTRACT NO. 72220		
		ILLINOIS	FED. AID PROJECT	

ROUTE NO.	SECTION	COUNTY	TOTAL SHEETS	SHEET NO.
S.B.I. F.A.I. 7-55	54-4HB	LOGAN	63	18
FED. ROAD DIST. NO. 7		ILLINOIS	FED. AID PROJECT	

SHEET NO. 5
36 SHEETS

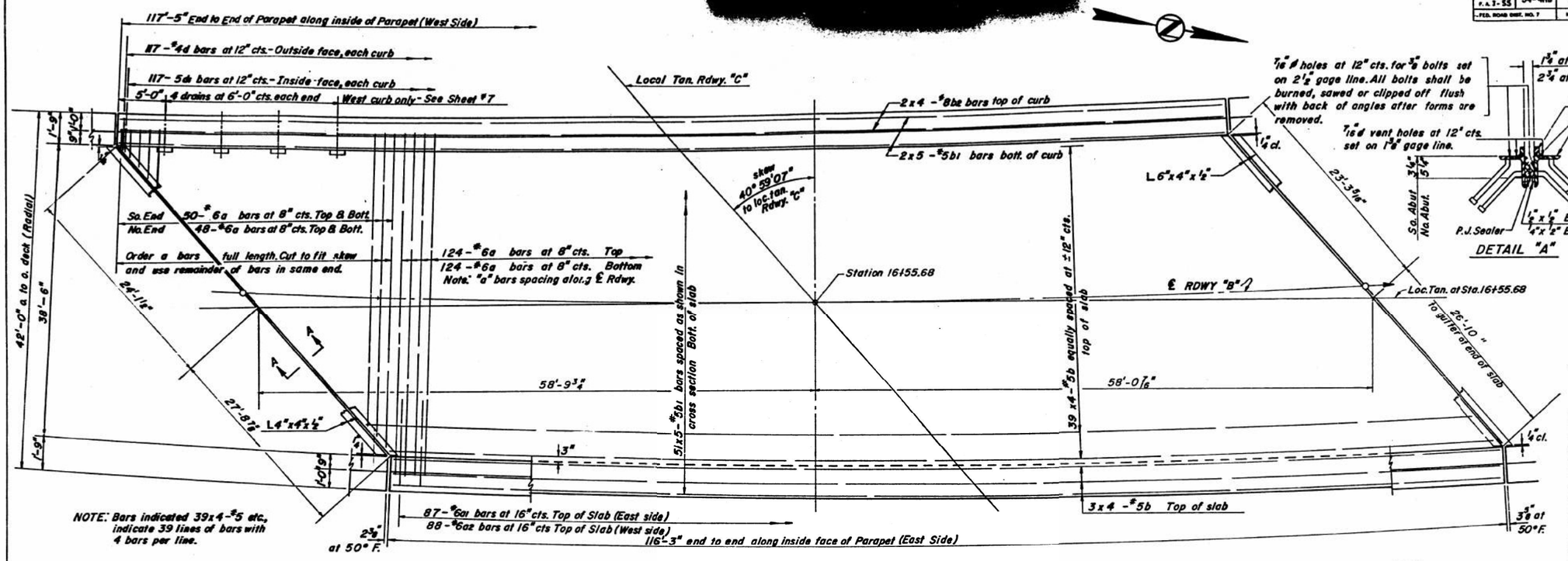

PLAN MAIN SPAN

BILL OF MATERIAL

Bar	No.	Size	Length	Shape
a	346	#6	40'-0"	
a1	87	#6	4'-0"	
a2	88	#6	4'-0"	
b	180	#5	30'-6"	
b1	275	#5	24'-7"	
b2	16	#8	30'-9"	
d	234	#4	4'-8"	
d1	234	#5	3'-8"	
Reinforcement Bars		Lbs.	37,550	
Class X Concrete		Cu. Yds.	143.8	
Preformed Joint Sealer		Lin. Ft.	111	

*Parapet Reinforcement and Class X Concrete are billed on Sheet #8.
For Section A-A see Sheet #6.

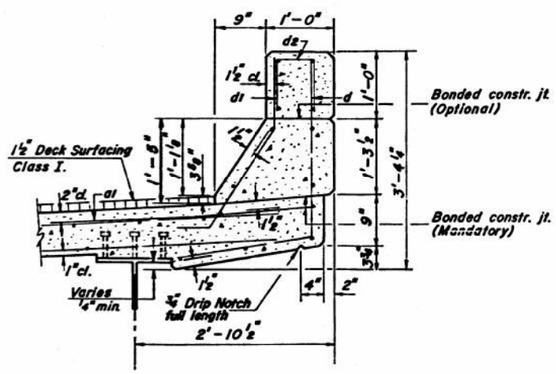

CURB SECTION
EAST SIDE
see Sheet #7 for W. Side

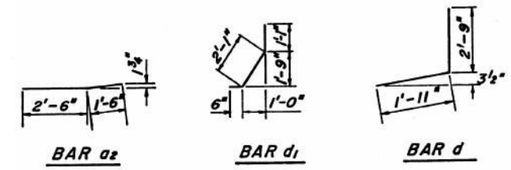

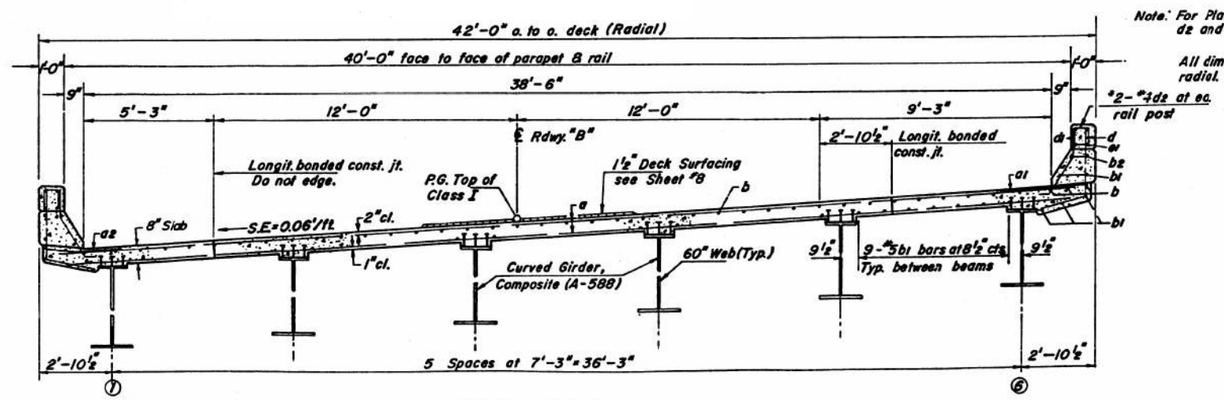

Note: For Placement of bars d2 and e1 see Sheet #8.

All dimensions are radial.

CROSS SECTION
Looking North

FOR INFORMATION ONLY

SUPERSTRUCTURE
F.A.I-55 SEC. 54-4HB
RDWY. "B"
LOGAN COUNTY
STA. 16+55.68

DESIGNED	G.E.P.
CHECKED	D.V.K.
DRAWN	R.H.H.
CHECKED	G.E.P.

19
EXAMINED
ENGINEER OF BRIDGE AND TRAFFIC STRUCTURES
PASSED
ENGINEER OF DESIGN
APPROVED
CHIEF HIGHWAY ENGINEER

1-1-2020

MODEL: Default
FILE NAME: P:\Transportation\4854 - IDOT PTB 198-023 D600W04\CADD-SC\054-0050-72220-042-2\EXISTING PLANS - Copy (5).dgn

CDI
CIVIL DESIGN, INC.
WBE / DBE
EFFINGHAM, IL
LICENSE #184.003222

USER NAME = $USER$	DESIGNED -	REVISED -
	DRAWN -	REVISED -
PLOT SCALE = $SCALE$	CHECKED -	REVISED -
PLOT DATE = 12/19/2024	DATE -	REVISED -

STATE OF ILLINOIS
DEPARTMENT OF TRANSPORTATION

EXISTING PLANS
STRUCTURE NO. 054-0050

SCALE: | SHEET 42 OF 63 SHEETS | STA. | TO STA.

F.A.I. RTE.	SECTION	COUNTY	TOTAL SHEETS	SHEET NO.
155	(54-4HB)D	LOGAN	133	76
		CONTRACT NO. 72220		
		ILLINOIS	FED. AID PROJECT	

ROUTE NO.	SECTION	COUNTY	TOTAL SHEETS	SHEET NO.
S.B.I. F.A. I-55	54-4HB	LOGAN	63	19
FED. ROAD DIST. NO. 7		ILLINOIS	FED. AID PROJECT	

SHEET NO. 6
36 SHEETS

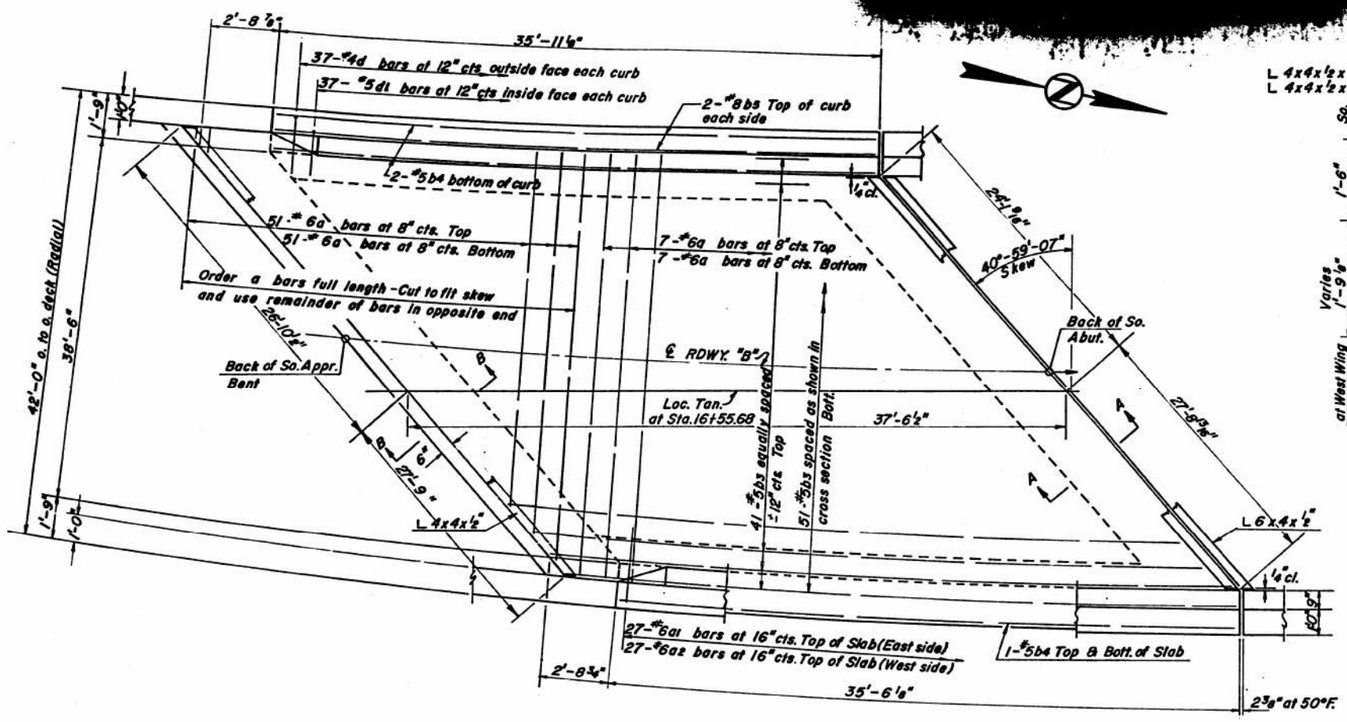

PLAN

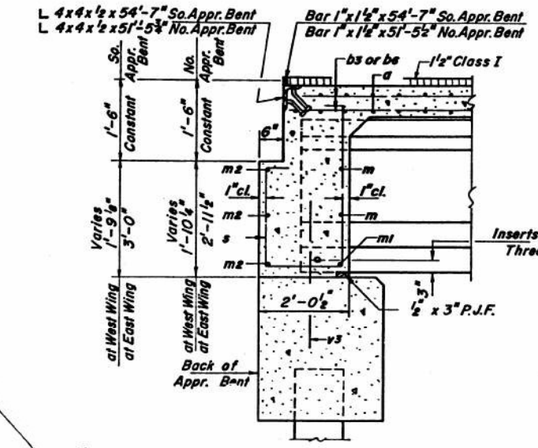

SECTION B-B

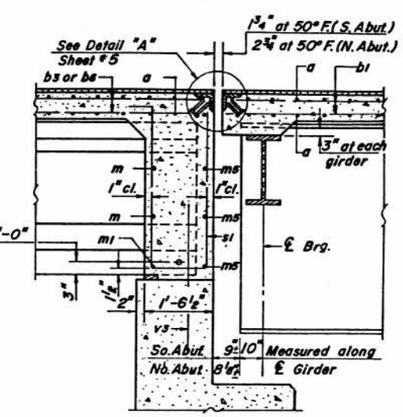

SECTION A-A

ONE APPR. SPAN
BILL OF MATERIAL

Bar	No.	Size	Length	Shape
a	116	#6	40'-0"	
a1	27	#6	4'-0"	
a2	27	#6	4'-0"	
bs	92	#5	38'-0"	
b4	8	#5	35'-8"	
be	4	#8	35'-8"	
d	74	#4	4'-8"	
d1	74	#5	3'-8"	
m	20	#4	8'-9"	
m1	10	#5	7'-7"	
m2	6	#5	28'-0"	
m3	10	#4	6'-6"	
m4	10	#4	5'-6"	
m5	6	#5	25'-0"	
s	37	#4	7'-10"	
s1	35	#4	8'-10"	
s2	27	#4	7'-0"	
Reinforcement Bars			Lbs.	13,270
Class X Concrete			Cu. Yds.	68.3

*Parapet Reinforcement and Class X Concrete are billed on sheet #8.

For placement and details of bars m thru m5 and s thru s2 see sheet #11 & #12.

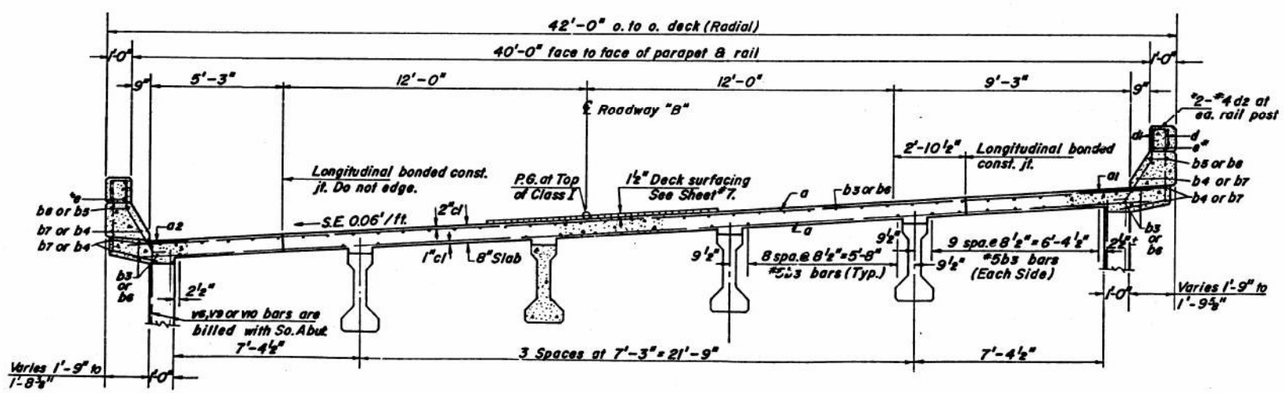

CROSS SECTION
Looking North

NOTE: P.P.C. Beam are straight... see layout Sheet #11.

Bars be, b7, & be (No. Appr.) similar to bs, b4, & bs (So. Appr.)

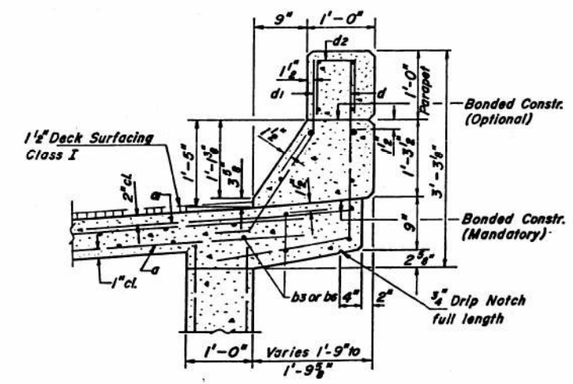

CURB SECTION
EAST SIDE
See Sheet #7 for W. Side

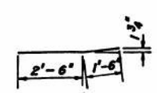

BAR a2

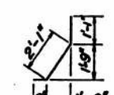

BAR d1

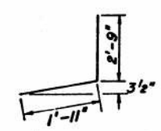

BAR d

SOUTH APPROACH SUPERSTRUCTURE
F.A.I-55 SEC. 54-4HB
ROADWAY "B"
LOGAN COUNTY
STA. 16+55.68

DESIGNED	G.E.P.
CHECKED	D.V.K.
DRAWN	R.H.H.
CHECKED	G.E.P.

19
EXAMINED
PASSED
APPROVED

FOR INFORMATION ONLY

1-1-2020

CDI
CIVIL DESIGN, INC.
WBE / DBE
EFFINGHAM, IL
LICENSE #184.003222

USER NAME = $USER$	DESIGNED -	REVISED -
	DRAWN -	REVISED -
PLOT SCALE = $SCALE$	CHECKED -	REVISED -
PLOT DATE = 12/19/2024	DATE -	REVISED -

STATE OF ILLINOIS
DEPARTMENT OF TRANSPORTATION

EXISTING PLANS
STRUCTURE NO. 054-0050

SCALE: SHEET 43 OF 63 SHEETS STA. TO STA.

F.A.I. RTE.	SECTION	COUNTY	TOTAL SHEETS	SHEET NO.
155	(54-4HB)D	LOGAN	133	77
		CONTRACT NO. 72220		
		ILLINOIS	FED. AID PROJECT	

MODEL: Default
FILE NAME: P:\Transportation\4854 - IDOT PTB 198-023 06\DWG\CADD_50\054-0050-72220-043-EXISTING PLANS - Copy (6).dgn

ROUTE NO.	SECTION	COUNTY	TOTAL SHEETS	SHEET NO.
S.B.I. F.A.I-55	54-4HB	LOGAN	63	20
FED. ROAD DIST. NO. 7	ILLINOIS	FED. AID PROJECT		

SHEET NO. 7
36 SHEETS

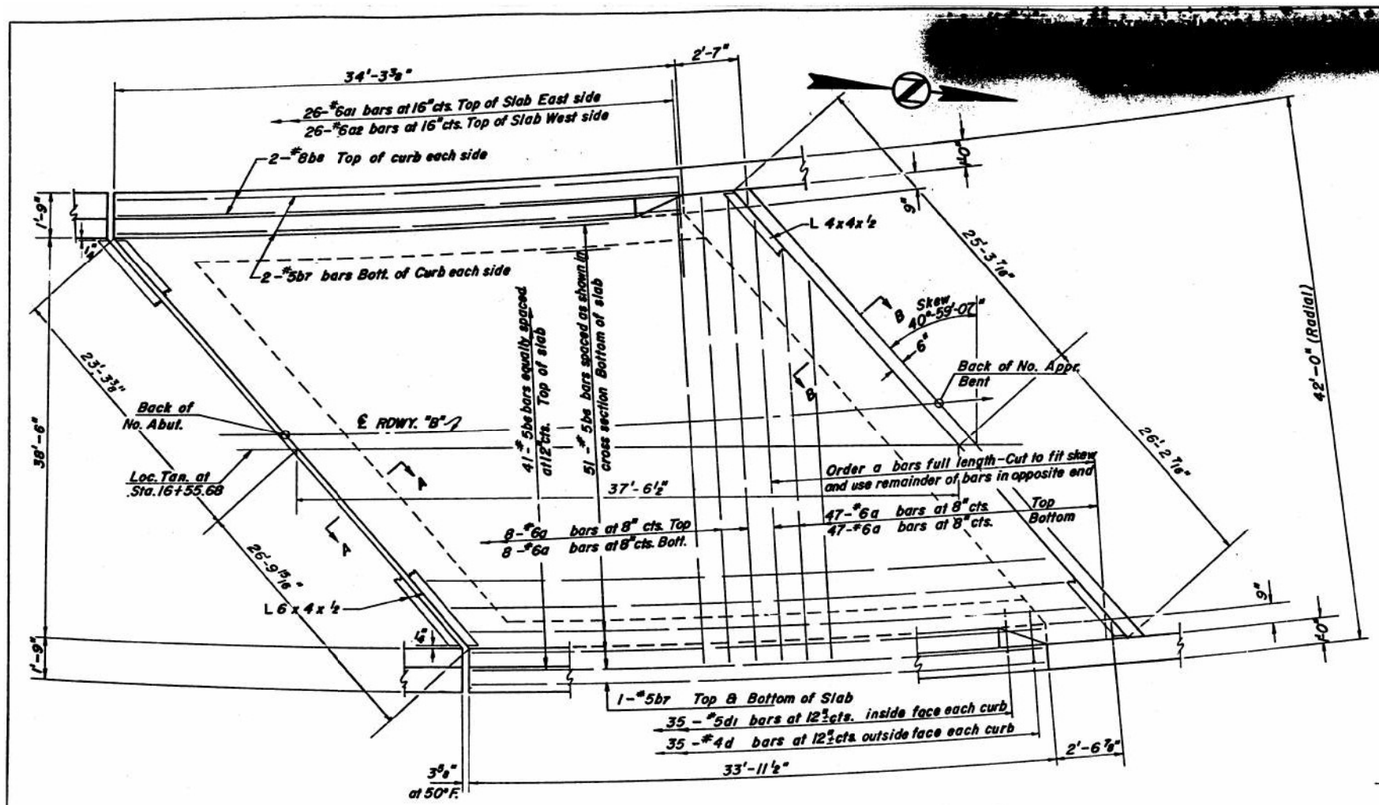

PLAN

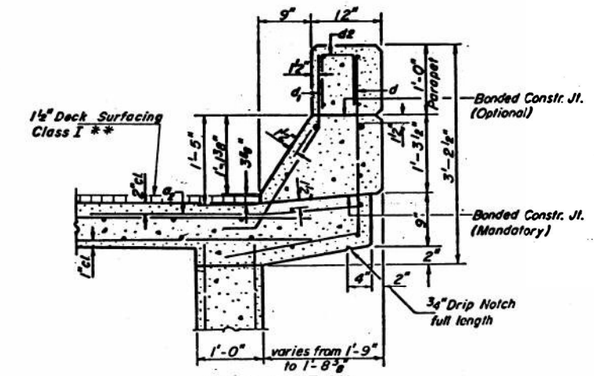

CURB SECTION
WEST SIDE

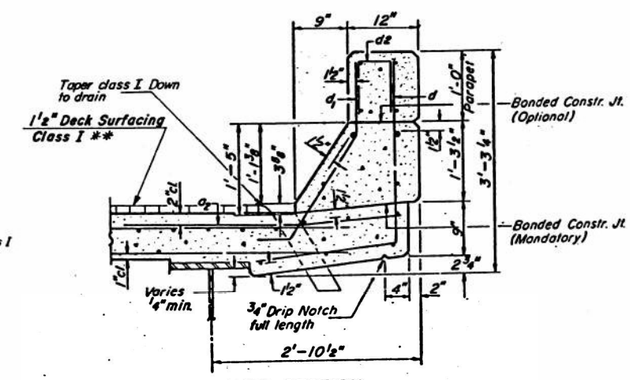

CURB SECTION
WEST SIDE

ONE APPR. SPAN
BILL OF MATERIAL

Bar	No.	Size	Length	Shape
a	110	#6	40'-0"	
a1	26	#6	4'-0"	
a2	26	#6	4'-0"	
bs	92	#5	36'-0"	
br	8	#5	33'-10"	
bs	4	#8	33'-10"	
d	70	#4	4'-8"	
d1	70	#5	3'-8"	
m	20	#4	8'-9"	
m1	10	#5	7'-7"	
m2	6	#5	28'-0"	
m3	10	#4	6'-6"	
m4	10	#4	5'-6"	
m5	6	#5	25'-0"	
s	35	#4	7'-10"	
s1	35	#4	8'-10"	
s2	27	#4	7'-0"	
Reinforcement Bars			Lbs.	12,630
Class X Concrete			Cu.Yds.	65.3

*Parapet Reinforcement and Class X Concrete are billed on sheet #8.

For placement and details of bars m thru ms and s thru s2 see sheet #11 & #12.

** Included in Sec. 54-4

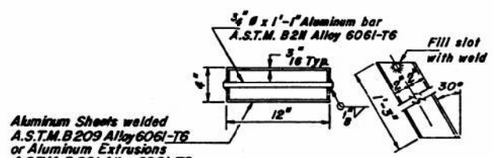

FLOOR DRAIN
(Cost incidental to Class X Concrete)

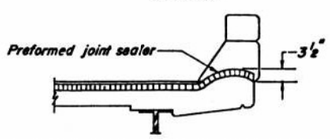

TYPICAL END OF SEALER TREATMENT

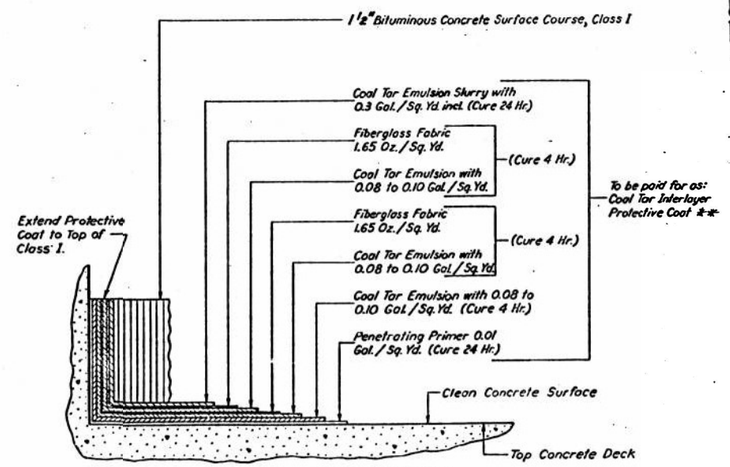

DECK SURFACING

FOR INFORMATION ONLY

NORTH APPROACH
SUPERSTRUCTURE
F.A.I-55 SEC. 54-4HB
ROADWAY "B"
LOGAN COUNTY
STA. 16+55.68

DESIGNED	G.E.P.
CHECKED	D.V.K.
DRAWN	R.H.H.
CHECKED	G.E.P.

19
EXAMINED
ENGINEER OF BRIDGE AND TRAFFIC STRUCTURES
PASSED
ENGINEER OF DESIGN
APPROVED
CHIEF HIGHWAY ENGINEER

1-1-2020

MODEL: Default
FILE NAME: P:\Transportation\4854 - IDOT PTB 198-023 D600W04\CADD-SG\054-0050-72220-044-EXISTING PLANS - Copy (7).dgn

CDI
CIVIL DESIGN, INC.
WBE / DBE
EFFINGHAM, IL
LICENSE #184.003222

USER NAME = $USER$	DESIGNED -	REVISED -
	DRAWN -	REVISED -
PLOT SCALE = $SCALE$	CHECKED -	REVISED -
PLOT DATE = 12/19/2024	DATE -	REVISED -

STATE OF ILLINOIS
DEPARTMENT OF TRANSPORTATION

EXISTING PLANS
STRUCTURE NO. 054-0050

SCALE: | SHEET 44 OF 63 SHEETS | STA. | TO STA.

F.A.I. RTE.	SECTION	COUNTY	TOTAL SHEETS	SHEET NO.
155	(54-4HB)D	LOGAN	133	78
		CONTRACT NO. 72220		
		ILLINOIS	FED. AID PROJECT	

STATE OF ILLINOIS

[redacted]

ROUTE NO.	SECTION	COUNTY	TOTAL SHEETS	SHEET NO.
F.A.I. 1-55	54-4HB	LOGAN	63	21
FED. ROAD DIST. NO. 7		ILLINOIS	FED. AID PROJECT	

SHEET NO 8
36 SHEETS

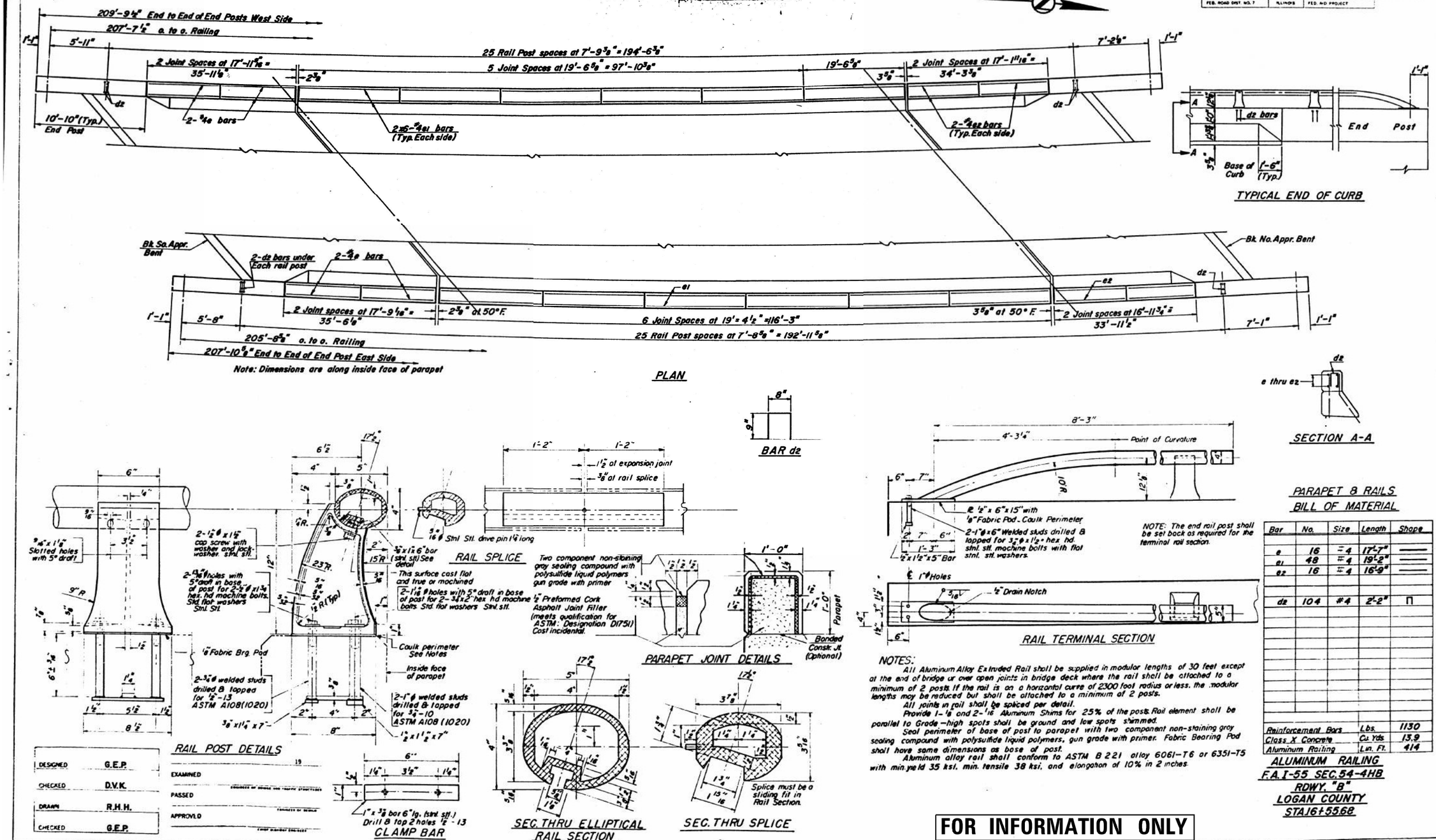

NOTES:

All Aluminum Alloy Extruded Rail shall be supplied in modular lengths of 30 feet except at the end of bridge or over open joints in bridge deck where the rail shall be attached to a minimum of 2 posts. If the rail is on a horizontal curve of 2300 foot radius or less, the modular lengths may be reduced but shall be attached to a minimum of 2 posts.

All joints in rail shall be spliced per detail.

Provide 1-1/8" and 2-1/16" Aluminum Shims for 25% of the posts. Rail element shall be parallel to Grade — high spots shall be ground and low spots shimmed.

Seal perimeter of base of post to parapet with two component non-staining gray sealing compound with polysulfide liquid polymers, gun grade with primer. Fabric Bearing Pad shall have same dimensions as base of post.

Aluminum alloy rail shall conform to ASTM B 221 alloy 6061-T6 or 6351-T5 with min. yield 35 ksi, min. tensile 38 ksi, and elongation of 10% in 2 inches.

PARAPET & RAILS
BILL OF MATERIAL

Bar	No.	Size	Length	Shape
e	16	#4	17'-7"	
e1	48	#4	19'-2"	
e2	16	#4	16'-9"	
dz	104	#4	2'-2"	⊓
Reinforcement Bars			Lbs.	1130
Class X Concrete			Cu. Yds.	13.9
Aluminum Railing			Lin. Ft.	414

ALUMINUM RAILING
F.A.I-55 SEC. 54-4HB
RDWY. "B"
LOGAN COUNTY
STA. 16+55.68

DESIGNED	G.E.P.
CHECKED	D.V.K.
DRAWN	R.H.H.
CHECKED	G.E.P.

EXAMINED 19
ENGINEER OF DESIGN AND TRAFFIC STRUCTURES
PASSED
ENGINEER OF DESIGN
APPROVED
CHIEF HIGHWAY ENGINEER

FOR INFORMATION ONLY

1-1-2020

MODEL: Default
FILE NAME: P:\Transportation\4854 - IDOT PTB 198-073 D600W04\CADD\50054-0050-72220-045-EXISTING PLANS - Copy (8).dgn

CDI CIVIL DESIGN, INC. WBE / DBE EFFINGHAM, IL LICENSE #184.003222

USER NAME = $USER$	DESIGNED -	REVISED -	
	DRAWN -	REVISED -	
PLOT SCALE = $SCALE$	CHECKED -	REVISED -	
PLOT DATE = 12/19/2024	DATE -	REVISED -	

STATE OF ILLINOIS
DEPARTMENT OF TRANSPORTATION

EXISTING PLANS
STRUCTURE NO. 054-0050

SCALE: SHEET 45 OF 63 SHEETS STA. TO STA.

F.A.I. RTE.	SECTION	COUNTY	TOTAL SHEETS	SHEET NO.
155	(54-4HB)D	LOGAN	133	79
		CONTRACT NO. 72220		
		ILLINOIS FED. AID PROJECT		

ROUTE NO.	SECTION	COUNTY	TOTAL SHEETS	SHEET NO.
S.B.I. F.A.I.-55	54-4HB	LOGAN	63	22
FED. ROAD DIST. NO. 7	ILLINOIS	FED. AID PROJECT		

SHEET NO. 9
36 SHEETS

[redacted]

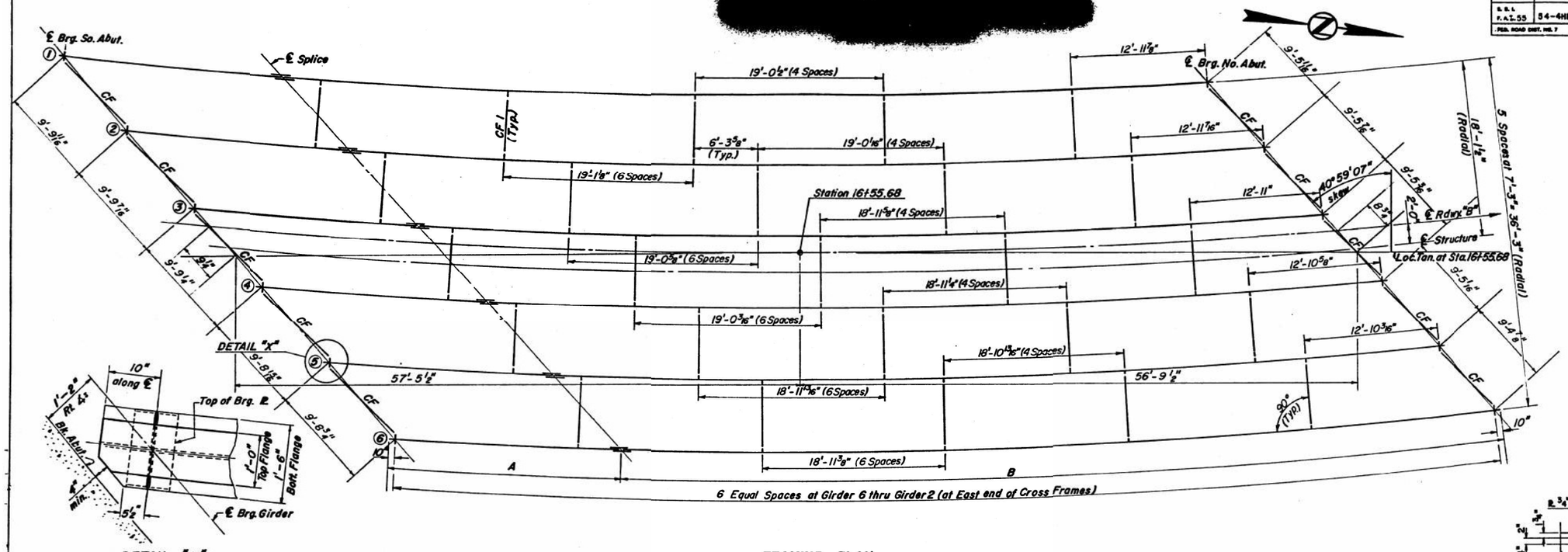

DETAIL "X" (TYP.)

FRAMING PLAN

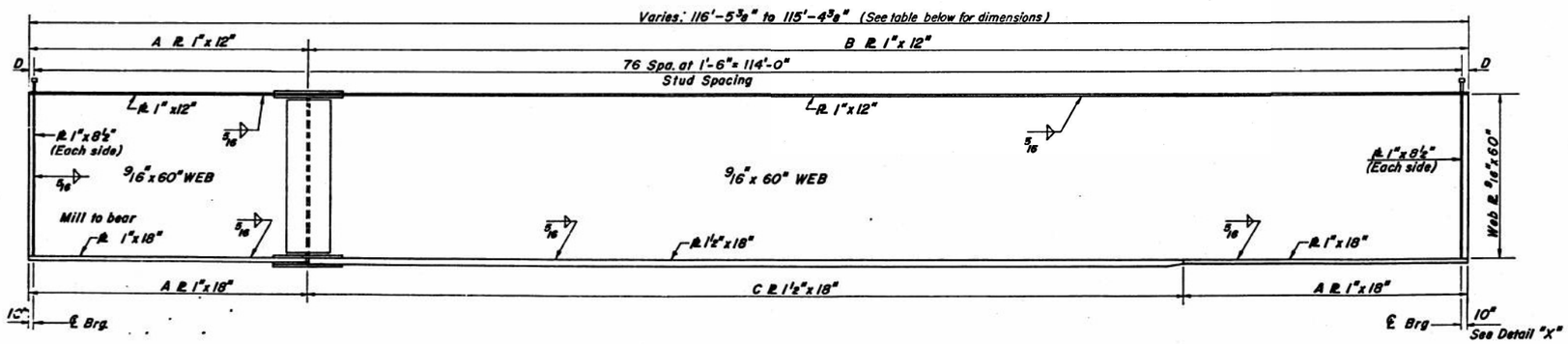

GIRDER ELEVATION

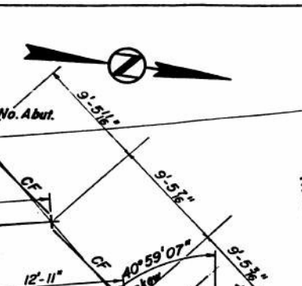

SECTION AT ABUTMENT

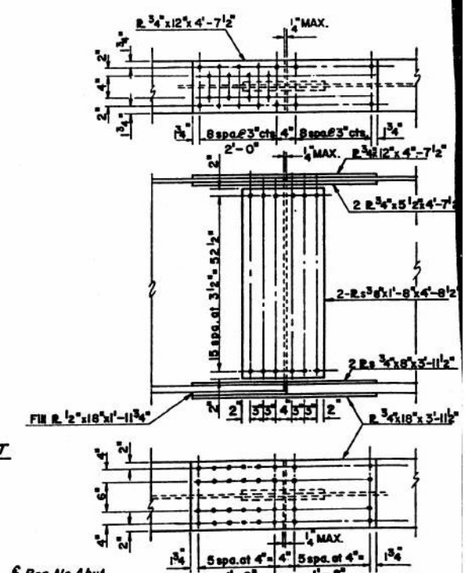

DETAIL OF FIELD SPLICES
All Bolts to be 1" ϕ H.S. Bolts

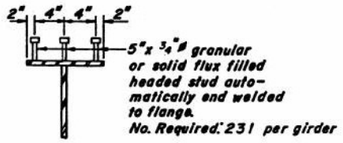

SECTION A-A

TABLE OF DIMENSIONS *

Dim.	G1	G2	G3	G4	G5	G6
A	23'-9½"	23'-9"	23'-8⅝"	23'-7⅝"	23'-7⅛"	23'-6⅞"
B	92'-7⅞"	92'-5⅜"	92'-3⅝"	92'-1⅝"	91'-11½"	91'-9½"
C	68'-10⅜"	68'-8⅜"	68'-7¼"	68'-5¾"	68'-4⅛"	68'-2⅝"
D	1'-2 7/16"	1'-1 5/16"	1'-0"	10¾"	9 7/16"	7 3/16"
Radius	2860665	2867915	2875165	2882415	2889665	2896915
Length*	116'-5⅜"	116'-2⅝"	116'-0"	115'-9½"	115'-6⅞"	115'-4⅜"

* End to End of Girder at ℄ Girder

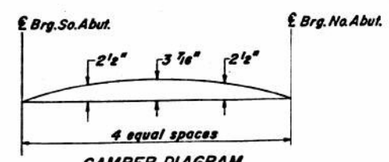

CAMBER DIAGRAM

FOR INFORMATION ONLY

STRUCTURAL STEEL
F.A.I-55 SEC. 54-4HB
ROADWAY "B"
LOGAN COUNTY
STA. 16+55.68

DESIGNED	G.E.P.
CHECKED	D.V.K.
DRAWN	R.H.H.
CHECKED	G.E.P.

19
EXAMINED
ENGINEER OF BRIDGE AND TRAFFIC STRUCTURES
PASSED
ENGINEER OF BRIDGE
APPROVED
CHIEF HIGHWAY ENGINEER

1-1-2020

MODEL: Default
FILE NAME: P:\Transportation\4854 - IDOT PTB 198-023 D6\WO4\CADD 56\054-0050-72220-046-EXISTING PLANS - Copy (9).dgn

CIVIL DESIGN, INC.
WBE / DBE
EFFINGHAM, IL
LICENSE #184.003222

USER NAME = $USER$	DESIGNED -	REVISED -	
	DRAWN -	REVISED -	
PLOT SCALE = $SCALES	CHECKED -	REVISED -	
PLOT DATE = 12/19/2024	DATE -	REVISED -	

STATE OF ILLINOIS
DEPARTMENT OF TRANSPORTATION

EXISTING PLANS
STRUCTURE NO. 054-0050

SCALE: | SHEET 46 OF 63 SHEETS | STA. | TO STA.

F.A.I. RTE.	SECTION	COUNTY	TOTAL SHEETS	SHEET NO.
155	(54-4HB)D	LOGAN	133	80
		CONTRACT NO. 72220		
		ILLINOIS	FED. AID PROJECT	

ROUTE NO.	SECTION	COUNTY	TOTAL SHEETS	SHEET NO.
S.B.I. F.A.I-55	54-4HB	LOGAN	63	23
FED. ROAD DIST. NO. 7		ILLINOIS	FED. AID PROJECT	

SHEET NO. 10
36 SHEETS

[redacted]

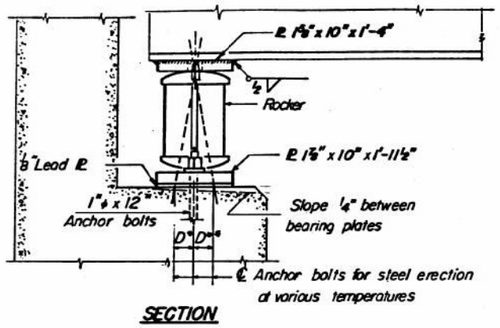

SECTION

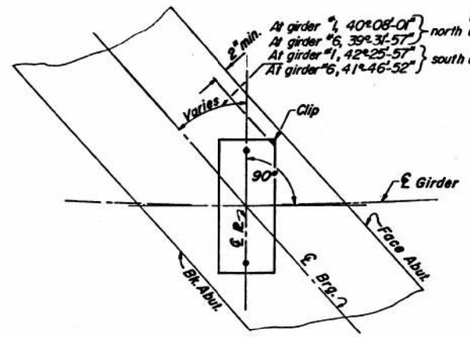

BEARING PLATE

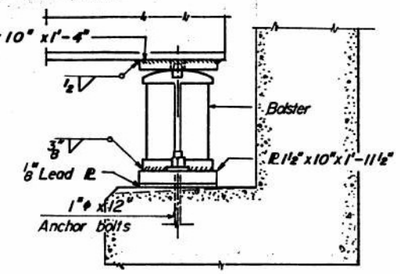

SECTION

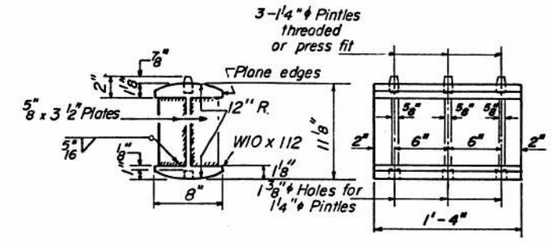

ROCKER

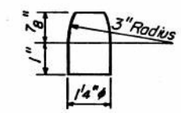

PINTLE

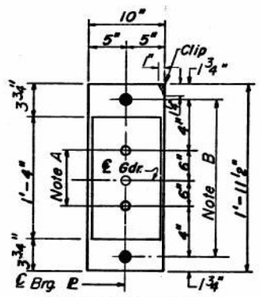

PLAN AT N. ABUT.

NOTE A
1⅜" ϕ Holes–1" deep in top PL for pintles. Thread or press fit pintles into bottom PL.

NOTE
Use A-36 Steel for bearing assemblies.

NOTE B
1½" ϕ Holes for 1" ϕ anchor bolts
⅝" x 2½" x 2½" PL Washers under nut.

NOTE C
1⅜" ϕ Holes 1" deep in top PL only for 1¼" ϕ pintles.

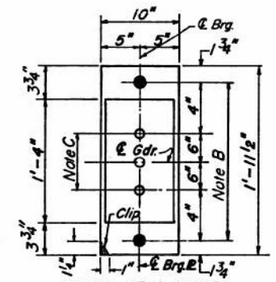

PLAN AT S. ABUT.

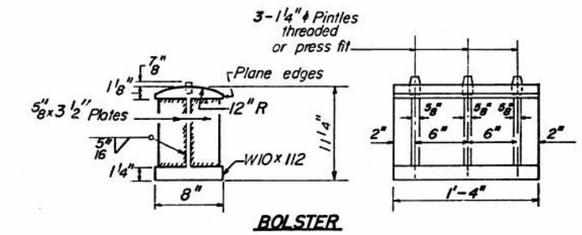

BOLSTER

BEARING ASSEMBLY DETAILS

NOTES ON SETTING OF ANCHOR BOLTS AT EXP. BRGS.

a) D* (Side of brg. away from fixed brg.)
D* = ⅛" per each 100' of expansion for every 15° fall below the normal temp. of 50°F.
D** (Side of brg. toward fixed brg.)
D** = ⅛" per each 100' of expansion for every 15° rise above the normal temp. of 50°F.

b) After beams have been erected and dimensions D* or D** determined, holes shall be drilled and anchor bolts shall be grouted in place. All fixed anchor bolts may be built into the masonry

MOMENT & SHEAR TABLE		.5 Sp.
Is	(in⁴)	43,861.66
Ic	(in⁴)	105,143.89
Ss	(in³)	1746.15
Sc	(in³)	2318.42
ℓ	(ft/in)	1.01
Mℓ	(ik)	1788
fsℓ	(ksi)	12.2*
Sℓ	(ft/in)	0.47
Msℓ=50(ik)		840
Mℓx=10(ik)		1281
Mimp (ik)		268
Total (ik)		2389*
fsℓ+fmℓ (ksi)		12.80
fs total (ksi)		25.09*
VR (k)		53.9

REACTION TABLE		Abut.
Rℓ	(k)	88.8
Rx	(k)	44.6
Imp.	(k)	9.3
Rtotal	(k)	142.7*

Is and Ss are the moment of inertia and section modulus of the steel.
Ic and Sc are the moment of inertia and section modulus of the composite section used in computing fs.
VR is the maximum ℓ + impact shear range in span.
*Stresses and reactions include secondary effects due to torque.

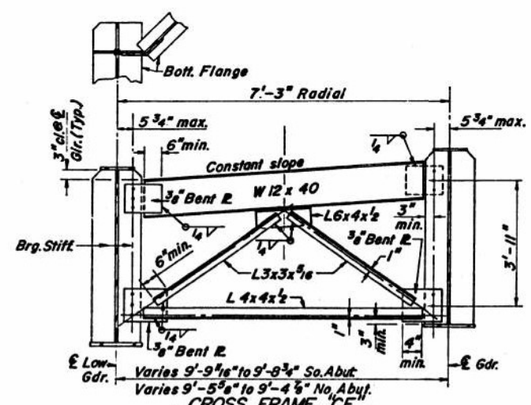

CROSS FRAME "CF"
(10 Req'd.)
Use ¾" ϕ H.S. Bolts

* SECONDARY MOMENT			* SECONDARY SHEAR	
Mℓ	(ik)	598	Rℓ	25 (k)
fsℓ	(ksi)	1.0	Rsℓ	1.2 (k)
Msℓ	(ik)	280	RℓxI	1.2 (k)
fs sℓ	(ksi)	0.44	Total R	49 (k)
Mℓx I	(ik)	319		
fsℓx I		0.68		
fs total	(ksi)	2.12		

Use A-36 Steel in Cross Frames

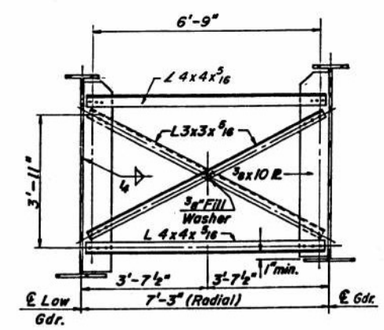

CROSS FRAME "CF1"
(25 Req'd.)
Use ¾" ϕ H.S. Bolts

DESIGNED	G.E.P.
CHECKED	D.V.K.
DRAWN	R.H.H.
CHECKED	G.E.P.

EXAMINED 19
PASSED
APPROVED

FOR INFORMATION ONLY

BEARING DETAILS
F.A.I-55 SEC.54-4HB
RDWY. "B"
LOGAN COUNTY
STA. 16+55.68

1-1-2020

MODEL: Default
FILE NAME: P:\Transportation\4854 - IDOT PTB 198-023 D6\WO04\CADD-50\054-0050-72220-047-2\EXISTING PLANS - Copy (10).dgn

CDI CIVIL DESIGN, INC. WBE / DBE EFFINGHAM, IL LICENSE #184.003222

USER NAME = $USER$	DESIGNED -	REVISED -
	DRAWN -	REVISED -
PLOT SCALE = $SCALE$	CHECKED -	REVISED -
PLOT DATE = 12/19/2024	DATE -	REVISED -

STATE OF ILLINOIS
DEPARTMENT OF TRANSPORTATION

EXISTING PLANS
STRUCTURE NO. 054-0050

SCALE: SHEET 47 OF 63 SHEETS STA. TO STA.

F.A.I. RTE.	SECTION	COUNTY	TOTAL SHEETS	SHEET NO.
155	(54-4HB)D	LOGAN	133	81
		CONTRACT NO. 72220		
		ILLINOIS	FED. AID PROJECT	

STATE OF ILLINOIS

[redacted]

ROUTE NO.	SECTION	COUNTY	TOTAL SHEETS	SHEET NO.
S. B. I. F. A. I-55	54-4HB	LOGAN	63	24
FED. ROAD DIST. NO. 7		ILLINOIS	FED. AID PROJECT	

SHEET NO. 11
36 SHEETS

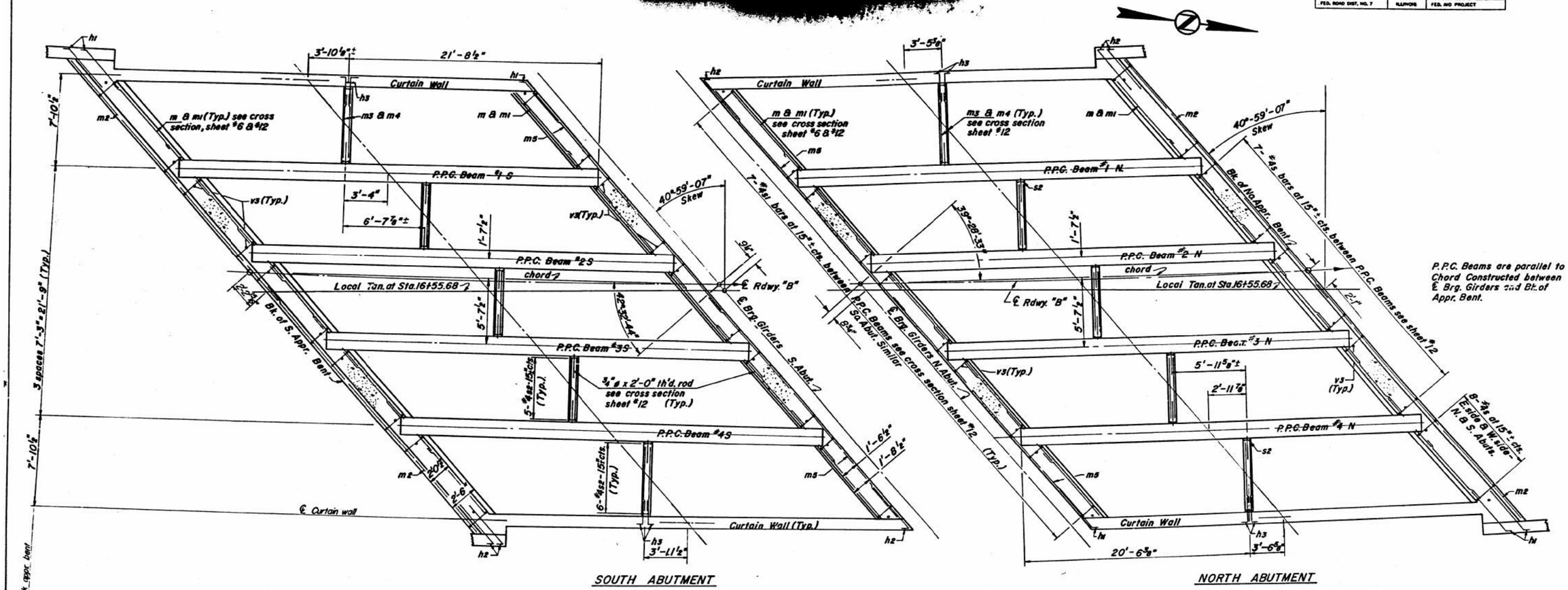

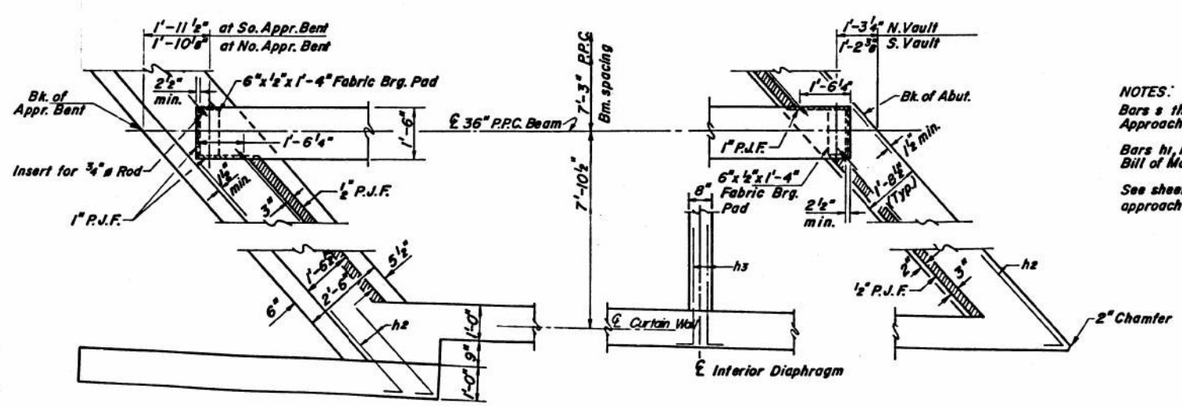

NOTES:

Bars s thru s2 and m thru m5 are billed with Approach Slab Bill of Material on sheets #6 & #7

Bars h1, h2, h3 & v3 are billed with Abutment Bill of Material on sheets #14 & #16

See sheet #6 for section thru abutment and approach bent diaphragms.

DESIGNED	G.E.P.
CHECKED	D.V.K.
DRAWN	R.H.H.
CHECKED	G.E.P.

19
EXAMINED
PASSED — Engineer of Bridge and Traffic Structures
APPROVED — Engineer of Design
Bridge Engineer, Springfield

FOR INFORMATION ONLY

PRESTRESSED BEAMS
FRAMING DETAILS
F.A.I-55 SEC.54-4HB
ROADWAY "B"
LOGAN COUNTY
STA.16+55.68

1-1-2020

MODEL: Default
FILE NAME: P:\Transportation\4654 - IDOT PTB 198-023 06\0W04\CADD 50\054-0050-72220-048-EXISTING PLANS - Copy (11).dgn

CDI — CIVIL DESIGN, INC. WBE / DBE — EFFINGHAM, IL — LICENSE #184.003222

USER NAME = $USER$	DESIGNED -	REVISED -	
	DRAWN -	REVISED -	
PLOT SCALE = $SCALE$	CHECKED -	REVISED -	
PLOT DATE = 12/19/2024	DATE -	REVISED -	

STATE OF ILLINOIS
DEPARTMENT OF TRANSPORTATION

EXISTING PLANS
STRUCTURE NO. 054-0050

SCALE: | SHEET 48 OF 63 SHEETS | STA. | TO STA.

F.A.I. RTE.	SECTION	COUNTY	TOTAL SHEETS	SHEET NO.
155	(54-4HB)D	LOGAN	133	82

CONTRACT NO. 72220
ILLINOIS | FED. AID PROJECT

ROUTE NO.	SECTION	COUNTY	TOTAL SHEETS	SHEET NO.
S. B. I. F. A. I-55	54-4HB	LOGAN	63	25
FED. ROAD DIST. NO. 7		ILLINOIS	FED. AID PROJECT	

SHEET NO. 12
36 SHEETS

[redacted]

NOTES:
Bars s thru s2 and m thru m5 are billed with Approach Slab Bill of Material on sheet #6 & #7

Bars h1, h2, h3 & v3 are billed with Abutment Bill of Material on sheet #14 & #16

See sheet #6 for sections thru abutment and approach bent diaphragms

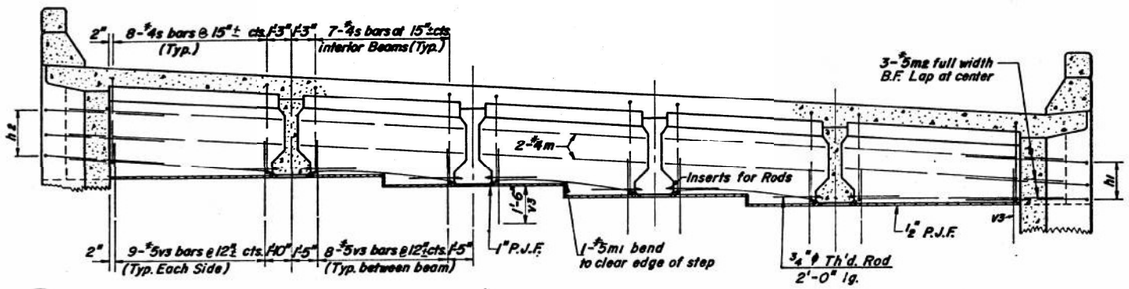

DIAPHRAGM AT APPROACH BENT
(looking south)

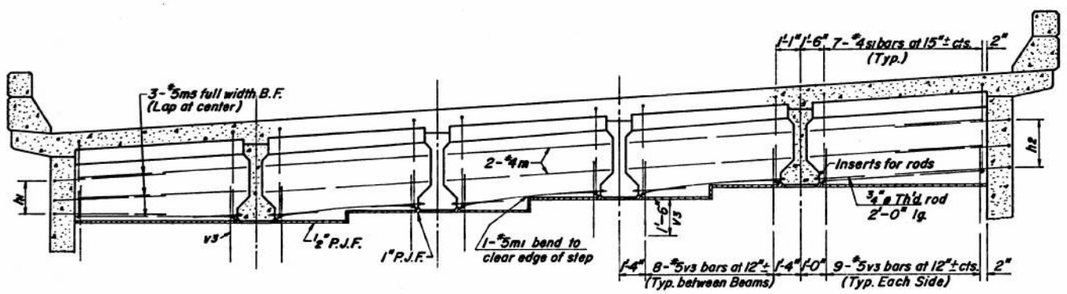

DIAPHRAGM AT ABUTMENT
(looking north)

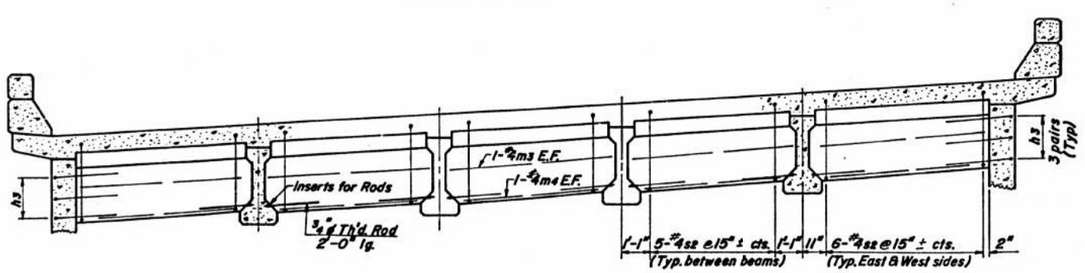

INTERIOR DIAPHRAGM
(looking north)

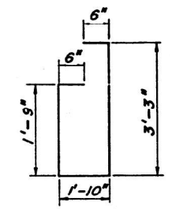

BAR s

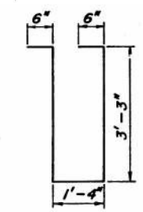

BAR s1

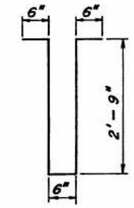

BAR s2

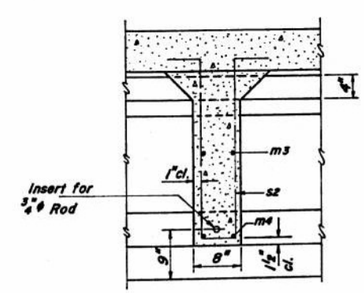

SECTION THRU
INTERIOR DIAPHRAGM

DESIGNED	G.E.P.
CHECKED	D.V.K.
DRAWN	R.H.H.
CHECKED	G.E.P.

19
EXAMINED
PASSED
APPROVED

FOR INFORMATION ONLY

PRESTRESSED BEAMS
DIAPHRAGM DETAILS
F.A.I-55 SEC.54-4HB
ROADWAY "B"
LOGAN COUNTY
STA.16+55.68

1-1-2020

MODEL: Default
FILE NAME: P:\Transportation\4854 - IDOT PTB 198-093 D6\0\0\CADD 50\054-0050-72220-049-EXISTING PLANS - Copy (12).dgn

CDI
CIVIL DESIGN, INC.
WBE / DBE
EFFINGHAM, IL
LICENSE #184.003222

USER NAME = $USER$	DESIGNED -	REVISED -
	DRAWN -	REVISED -
PLOT SCALE = $SCALE$	CHECKED -	REVISED -
PLOT DATE = 12/19/2024	DATE -	REVISED -

STATE OF ILLINOIS
DEPARTMENT OF TRANSPORTATION

EXISTING PLANS
STRUCTURE NO. 054-0050

SCALE: | SHEET 49 OF 63 SHEETS | STA. | TO STA.

F.A.I. RTE.	SECTION	COUNTY	TOTAL SHEETS	SHEET NO.
155	(54-4HB)D	LOGAN	133	83
		CONTRACT NO. 72220		
		ILLINOIS	FED. AID PROJECT	

STATE OF ILLINOIS
[redacted]

ROUTE NO.	SECTION	COUNTY	TOTAL SHEETS	SHEET NO.
S.B.I. F.A.I-55	54-4HB	LOGAN	63	26
FED. ROAD DIST. NO. 7		ILLINOIS	FED. AID PROJECT	

SHEET NO. 13
36 SHEETS

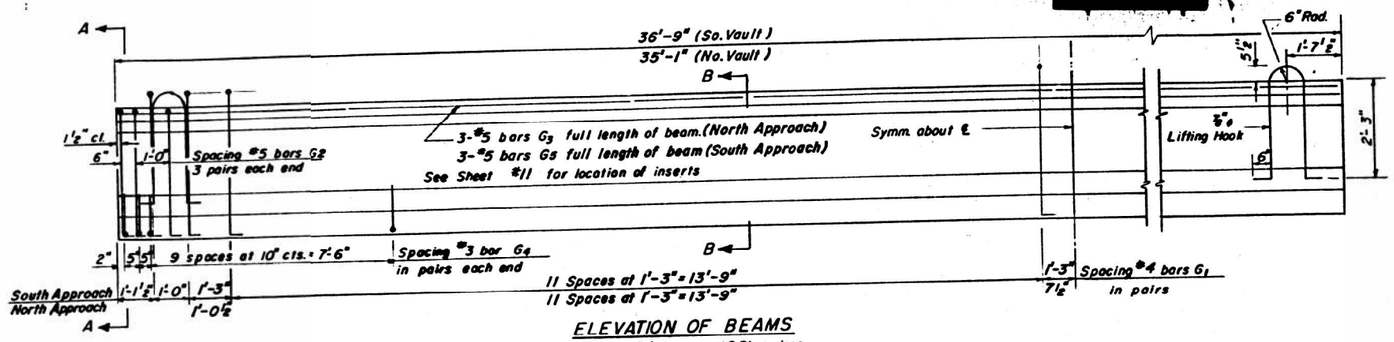

ELEVATION OF BEAMS
Showing Reinforcement & Dimensions

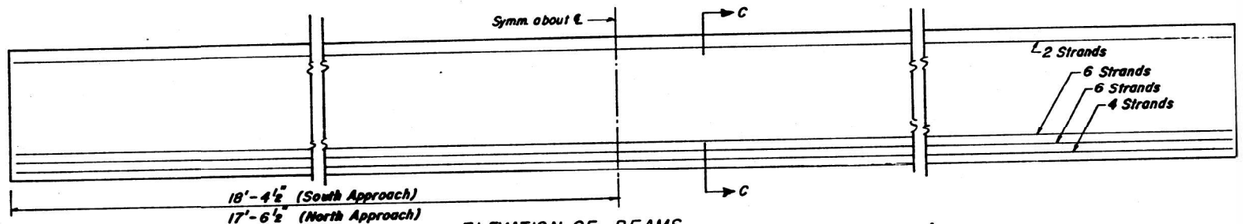

ELEVATION OF BEAMS
Showing Prestressing Steel

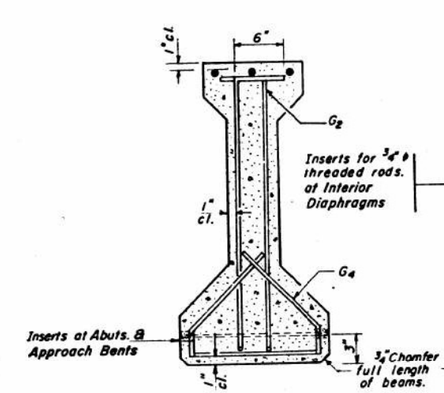

SECTION A-A

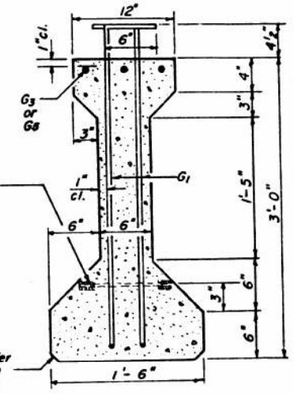

SECTION B-B

SOUTH APPROACH
*BAR LIST

Bar	No.	Size	Length	Shape
G1	58	#4	4'-2½"	7L
G2	12	#5	3'-9"	7L
G4	48	#3	2'-7"	L
G3	3	#5	36'-6"	—

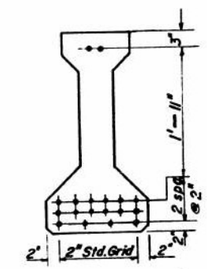

SECTION C-C

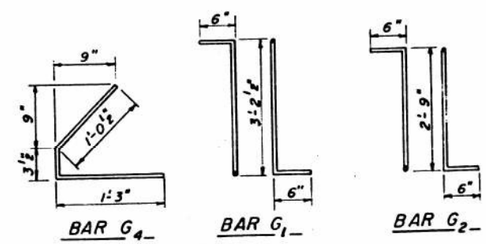

BAR G4 BAR G1 BAR G2

*BAR LIST

Bar	No.	Size	Length	Shape
G1	56	#4	4'-2½"	7L
G2	12	#5	3'-9"	7L
G3	3	#5	34'-9"	—
G4	48	#3	2'-7"	L

* For one beam only.

NOTES

All inserts and threaded rods for inserts, reinforcing and Prestressing Steel, and other items which are cast into the Precast Concrete I-Beams shall be included in the contract unit price per lineal foot of "Furnishing And Erecting Precast Prestressed Concrete I-Beams, 36" in.

Prestressing Steel shall have a nominal diameter of 7/16".

Inserts for ¾" ϕ threaded rods are to be two strut, coil type for interior I-Beams and single coil flared loop type for exterior I-Beams.

Steel for lifting hooks shall be A.S.T.M. A-306 Grade 70-80.

An alternate strand pattern using Extra High Strength Presstressing strand (270 K.S.I.) is permitted.

BILL OF MATERIAL

Item	Unit	Total
Furnishing & Erecting Precast Prestressed Concrete I-Beams, 36"	Lin. Ft.	288

FOR INFORMATION ONLY

PRECAST PRESTRESSED CONCRETE BEAMS
F.A.I-55 SEC. 54-4HB
ROADWAY "B"
LOGAN COUNTY
STA. 16+55.68

DESIGNED	G.E.P.
CHECKED	D.V.K.
DRAWN	E.S. & R.H.H.
CHECKED	G.E.P.

19
EXAMINED — ENGINEER OF BRIDGE AND TRAFFIC STRUCTURES
PASSED — ENGINEER OF DESIGN
APPROVED — CHIEF HIGHWAY ENGINEER

1-1-2020

MODEL: Default
FILE NAME: P:\Transportation\4854 - IDOT PYB 198-023 D60W04\CADD-50\054-0050-72220-050-EXISTING PLANS - Copy (13).dgn

CDI
CIVIL DESIGN, INC.
WBE / DBE
EFFINGHAM, IL
LICENSE #184.003222

USER NAME = $USER$	DESIGNED -	REVISED -
	DRAWN -	REVISED -
PLOT SCALE = $SCALE$	CHECKED -	REVISED -
PLOT DATE = 12/19/2024	DATE -	REVISED -

STATE OF ILLINOIS
DEPARTMENT OF TRANSPORTATION

EXISTING PLANS
STRUCTURE NO. 054-0050

SCALE: SHEET 50 OF 63 SHEETS STA. TO STA.

F.A.I. RTE.	SECTION	COUNTY	TOTAL SHEETS	SHEET NO.
155	(54-4HB)D	LOGAN	133	84
		CONTRACT NO. 72220		
		ILLINOIS	FED. AID PROJECT	

STATE OF ILLINOIS [redacted]

ROUTE NO.	SECTION	COUNTY	TOTAL SHEETS	SHEET NO.
S.B.I. F.A. I-55	54-4HB	LOGAN	63	27
FED. ROAD DIST. NO. 7		ILLINOIS	FED. AID PROJECT	

SHEET NO. 14
36 SHEETS

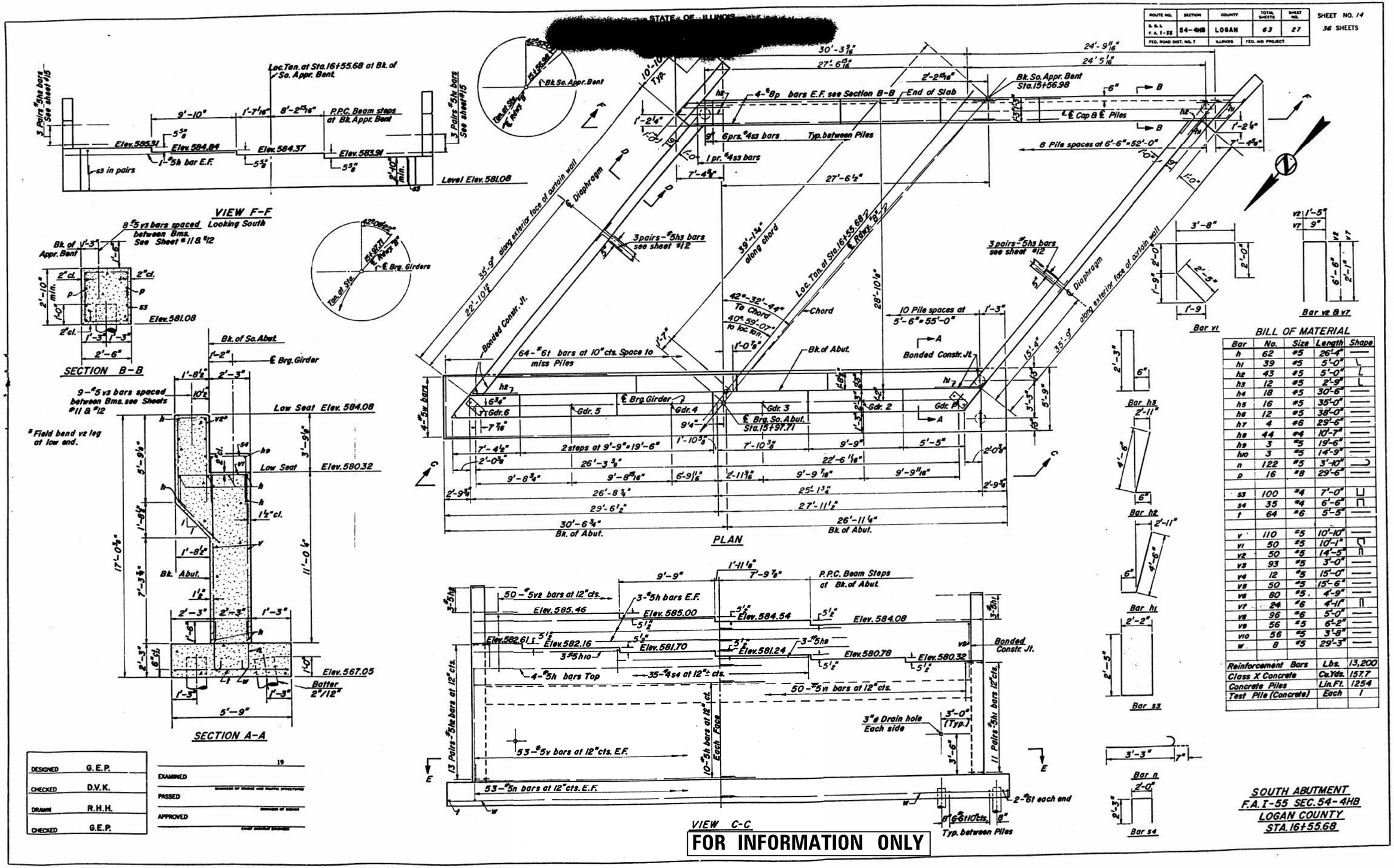

BILL OF MATERIAL

Bar	No.	Size	Length	Shape
h	62	#5	26'-4"	
h1	39	#5	5'-0"	L
h2	43	#5	5'-0"	L
h3	12	#5	2'-9"	L
h4	18	#5	30'-6"	
h5	16	#5	35'-0"	
h6	12	#5	38'-0"	
h7	4	#6	29'-6"	
h8	44	#4	10'-7"	
h9	3	#5	19'-6"	
h10	3	#5	14'-9"	
n	122	#5	3'-10"	U
p	16	#8	29'-6"	
s3	100	#4	7'-0"	U
s4	35	#4	6'-6"	U
t	64	#6	5'-5"	
v	110	#5	10'-10"	
v1	50	#5	10'-1"	U
v2	50	#5	14'-5"	U
v3	93	#5	3'-0"	
v4	12	#5	15'-0"	
v5	50	#5	15'-6"	
v6	80	#5	4'-9"	
v7	24	#6	4'-11"	U
v8	96	#6	5'-0"	
v9	56	#5	6'-2"	
v10	56	#5	3'-8"	
w	8	#5	29'-3"	
Reinforcement Bars			Lbs.	13,200
Class X Concrete			Cu.Yds.	157.7
Concrete Piles			Lin.Ft.	1254
Test Pile (Concrete)			Each	1

SOUTH ABUTMENT
F.A.I.-55 SEC. 54-4HB
LOGAN COUNTY
STA. 16+55.68

DESIGNED	G.E.P.
CHECKED	D.V.K.
DRAWN	R.H.H.
CHECKED	G.E.P.

19
EXAMINED — ENGINEER OF BRIDGE AND TRAFFIC STRUCTURES
PASSED — ENGINEER OF BRIDGE
APPROVED — CHIEF ENGINEER

1-1-2020

MODEL: Default
FILE NAME: P:\Transportation\4854 - IDOT PTB 198-023 D6\WO4\CADD 50\054-0050-72220-051-EXISTING PLANS - Copy (14).dgn

CDI — CIVIL DESIGN, INC. WBE / DBE — EFFINGHAM, IL — LICENSE #184.003222

USER NAME = $USER$	DESIGNED -	REVISED -	
	DRAWN -	REVISED -	
PLOT SCALE = $SCALES	CHECKED -	REVISED -	
PLOT DATE = 12/19/2024	DATE -	REVISED -	

STATE OF ILLINOIS
DEPARTMENT OF TRANSPORTATION

EXISTING PLANS
STRUCTURE NO. 054-0050

SCALE: | SHEET 51 OF 63 SHEETS | STA. | TO STA.

F.A.I. RTE.	SECTION	COUNTY	TOTAL SHEETS	SHEET NO.
155	(54-4HB)D	LOGAN	133	85
		CONTRACT NO. 72220		
		ILLINOIS	FED. AID PROJECT	

ROUTE NO.	SECTION	COUNTY	TOTAL SHEETS	SHEET NO.
S.B.I. F.A. I-55	54-4HB	LOGAN	63	28
FED. ROAD DIST. NO. 7	ILLINOIS	FED. AID PROJECT		

SHEET NO. 15
36 SHEETS

STATE OF ILLINOIS [redacted]

End Post shall be poured after bridge parapet is in place. Form top surface to match parapet grade.

TOP OF CURTAIN WALL ELEVATIONS SO. ABUT.

Location	Elev. A	Elev. B
East Wall	588.77	588.90
West Wall	586.38	586.54

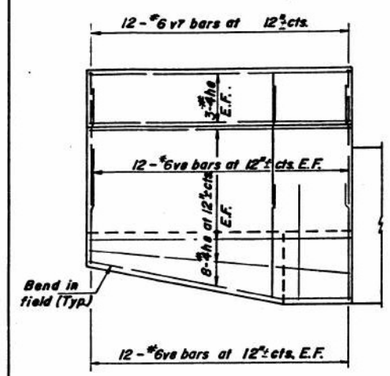

WING WALL REINFORCEMENT

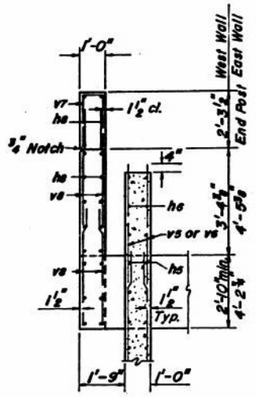

SECTION D-D

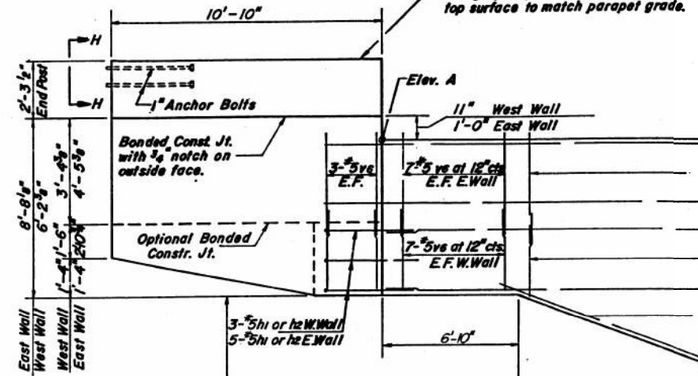

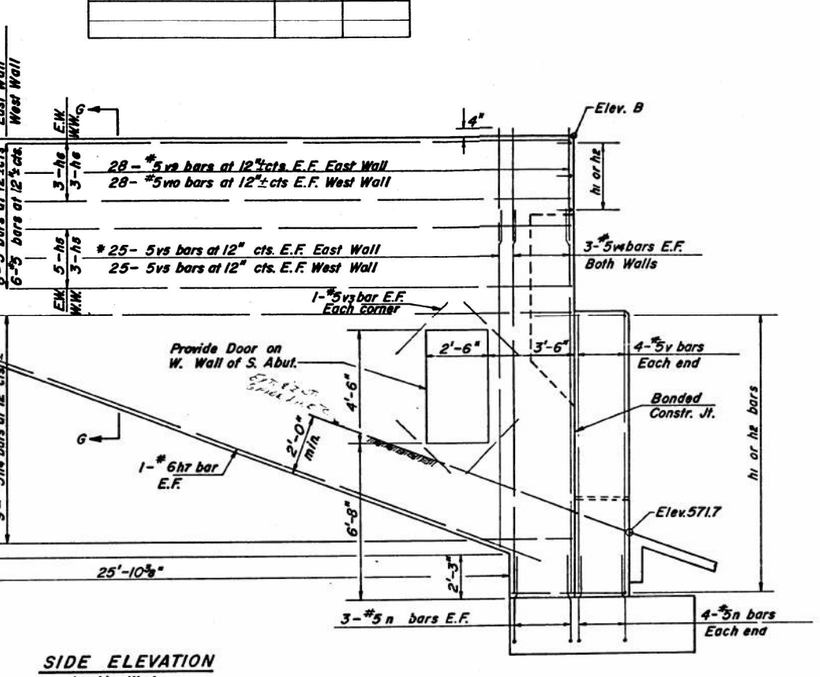

SIDE ELEVATION
Looking West

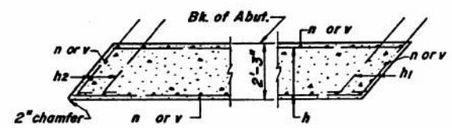

SECTION E-E

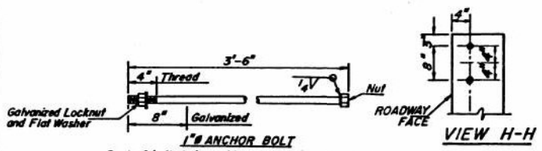

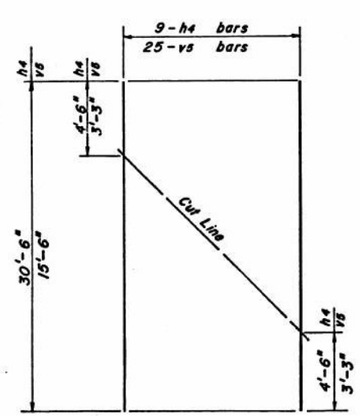

FIELD CUTTING DIAGRAM

* Order h4 & v5 bars full length. Cut to fit as shown and use remainder of bars in other face.

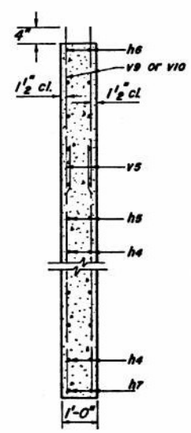

SECTION G-G

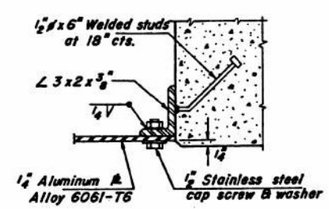

SECTION J-J

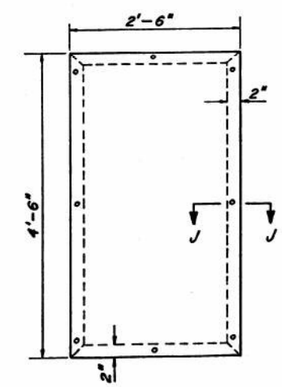

DOOR ELEVATION
(Cost of door and frame are incidental)

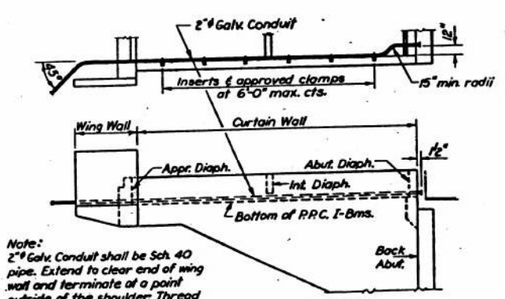

Note:
2"ø Galv. Conduit shall be Sch. 40 pipe. Extend to clear end of wing wall and terminate at a point outside of the shoulder. Thread and cap each end. Cost incidental.

VAULTED ABUTMENT

APPR. BENT-PILE DATA

Type	Concrete Piles
Capacity	30 Tons
Est. Length	55'
No. Req'd.	8 + 1 Test Pile

ABUT.- PILE DATA

Type	Concrete Piles
Capacity	40 Tons
Est. Length	37'
No. Req'd.	22

DESIGNED	G.E.P.
CHECKED	D.V.K.
DRAWN	R.H.H.
CHECKED	G.E.P.

19
EXAMINED — ENGINEER OF BRIDGE AND TRAFFIC STRUCTURES
PASSED — ENGINEER OF DESIGN
APPROVED — CHIEF HIGHWAY ENGINEER

FOR INFORMATION ONLY

SOUTH ABUTMENT DETAILS
RDWY. "B"
F.A.I-55 SEC. 54-4HB
LOGAN COUNTY
STA. 161+55.68

1-1-2020

MODEL: Default
FILE NAME: P:\Transportation\4654 - IDOT PTB 198-023 06\0W04\CADD 50\054-0050-72220-052-EXISTING PLANS - Copy (15).dgn

CIVIL DESIGN, INC. WBE / DBE EFFINGHAM, IL LICENSE #184.003222	USER NAME = $USER$	DESIGNED -	REVISED -
		DRAWN -	REVISED -
	PLOT SCALE = $SCALE$	CHECKED -	REVISED -
	PLOT DATE = 12/19/2024	DATE -	REVISED -

STATE OF ILLINOIS
DEPARTMENT OF TRANSPORTATION

EXISTING PLANS
STRUCTURE NO. 054-0050

SCALE: | SHEET 52 OF 63 SHEETS | STA. | TO STA.

F.A.I. RTE.	SECTION	COUNTY	TOTAL SHEETS	SHEET NO.
155	(54-4HB)D	LOGAN	133	86
		CONTRACT NO. 72220		
		ILLINOIS	FED. AID PROJECT	

STATE OF ILLINOIS

[redacted]

ROUTE NO.	SECTION	COUNTY	TOTAL SHEETS	SHEET NO.
S.B.I. F.A. I-55	54-4HB	LOGAN	63	29
FED. ROAD DIST. NO. 7		ILLINOIS	FED. AID PROJECT	

SHEET NO. 16
36 SHEETS

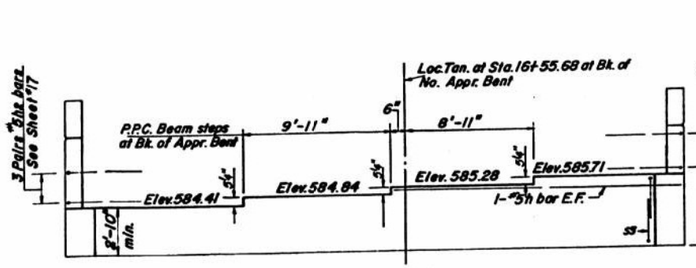

VIEW F-F
Looking North

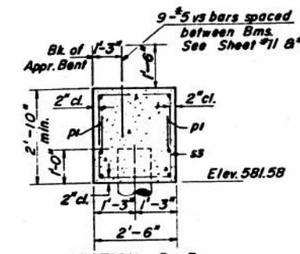

SECTION B-B

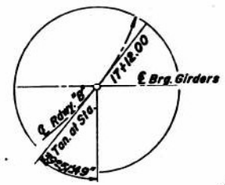

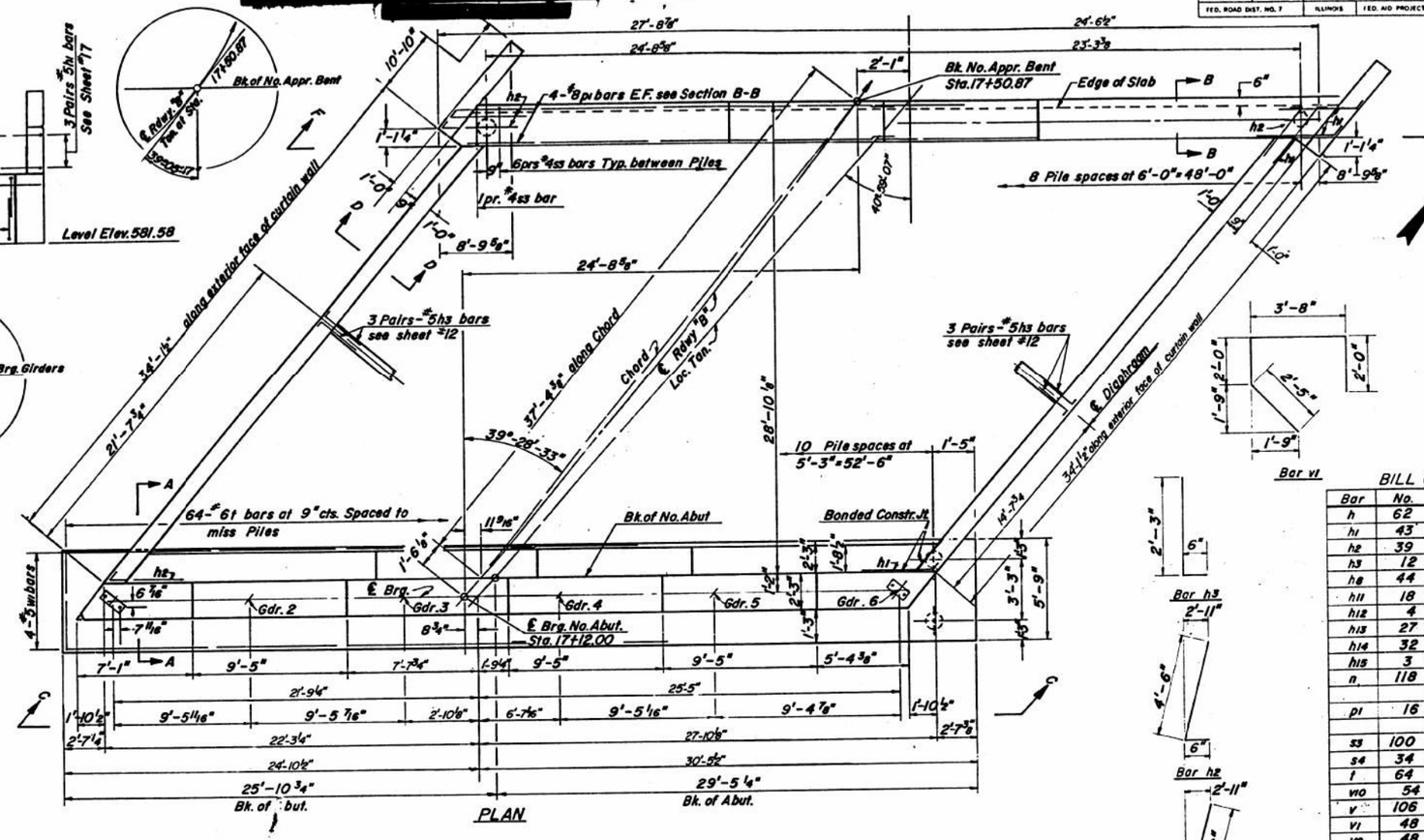

PLAN

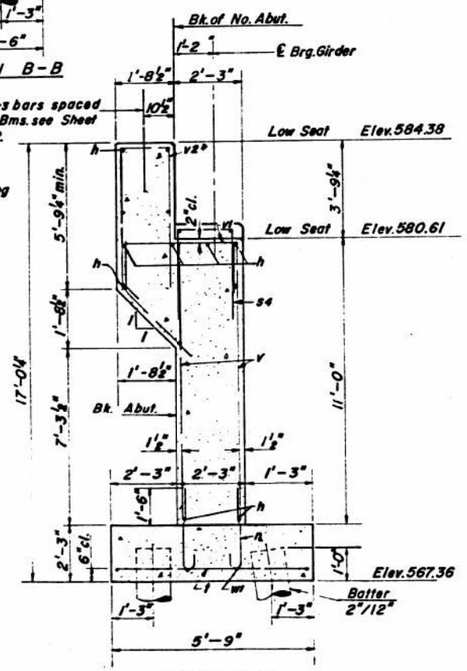

SECTION A-A

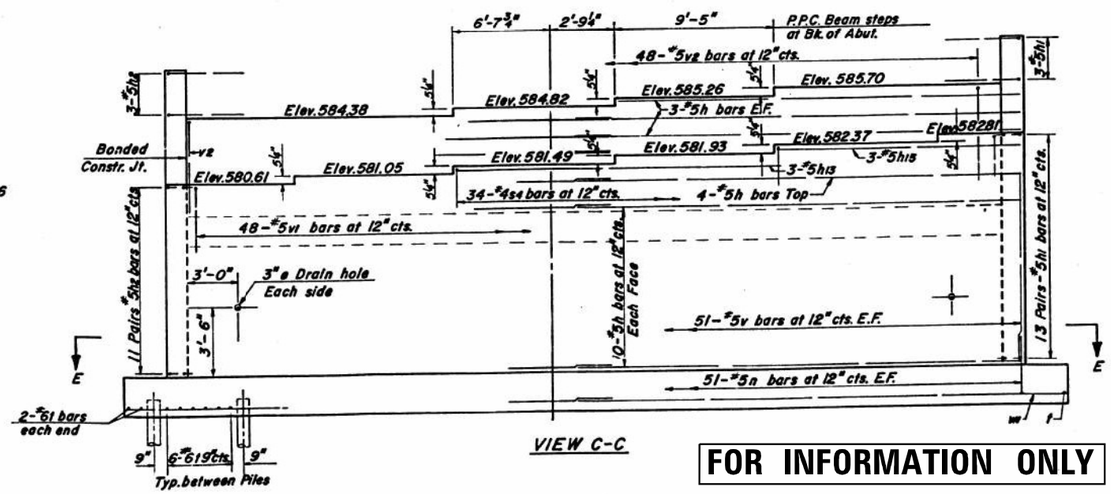

VIEW C-C

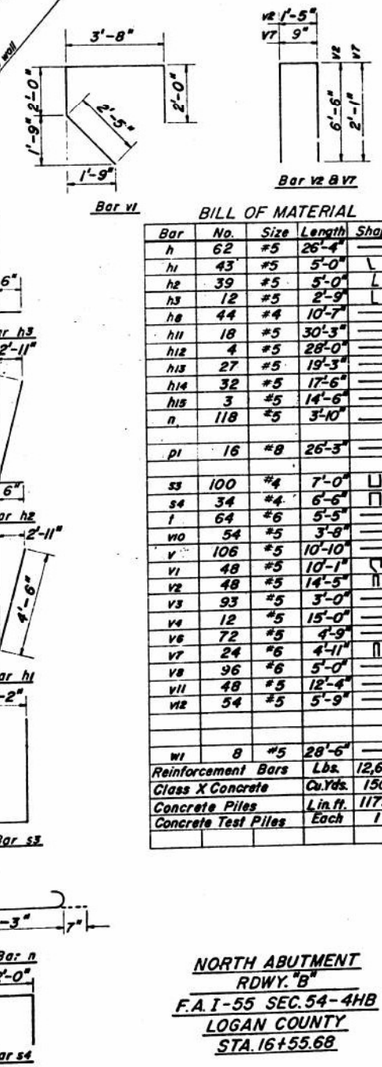

BILL OF MATERIAL

Bar	No.	Size	Length	Shape
h	62	#5	26'-4"	
h1	43	#5	5'-0"	L
h2	39	#5	5'-0"	L
h3	12	#5	2'-9"	
h8	44	#4	10'-7"	
h11	18	#5	30'-3"	
h12	4	#5	28'-0"	
h13	27	#5	19'-3"	
h14	32	#5	17'-6"	
h15	3	#5	14'-6"	
n	118	#5	3'-10"	
pl	16	#8	26'-3"	
s3	100	#4	7'-0"	
s4	34	#4	6'-6"	
t	64	#6	5'-5"	
v10	54	#5	3'-8"	
v	106	#5	10'-10"	
v1	48	#5	10'-1"	
v2	48	#5	14'-5"	
v3	93	#5	3'-0"	
v4	12	#5	15'-0"	
v6	72	#5	4'-9"	
v7	24	#6	4'-11"	
v8	96	#6	5'-0"	
v11	48	#5	12'-4"	
v12	54	#5	5'-9"	
w1	8	#5	28'-6"	
Reinforcement Bars			Lbs.	12,600
Class X Concrete			Cu.Yds.	150.8
Concrete Piles			Lin.ft.	1179
Concrete Test Piles			Each	1

DESIGNED	G.E.P.
CHECKED	D.V.K.
DRAWN	R.H.H.
CHECKED	G.E.P.

19
EXAMINED
ENGINEER OF BRIDGE AND TRAFFIC STRUCTURES
PASSED
ENGINEER OF BRIDGES
APPROVED
CHIEF HIGHWAY ENGINEER

NORTH ABUTMENT
RDWY. "B"
F.A.I-55 SEC. 54-4HB
LOGAN COUNTY
STA. 16+55.68

FOR INFORMATION ONLY

1-1-2020

MODEL: Default
FILE NAME: P:\Transportation\4854 - IDOT PTB 198-023 06-0WGA\CADD 50\054-0050-72220-053-EXISTING PLANS - Copy (16).dgn

CDI — CIVIL DESIGN, INC. WBE / DBE — EFFINGHAM, IL — LICENSE #184.003222

USER NAME = $USER$	DESIGNED -	REVISED -	
	DRAWN -	REVISED -	
PLOT SCALE = $SCALE$	CHECKED -	REVISED -	
PLOT DATE = 12/19/2024	DATE -	REVISED -	

STATE OF ILLINOIS
DEPARTMENT OF TRANSPORTATION

EXISTING PLANS
STRUCTURE NO. 054-0050

SCALE: | SHEET 53 OF 63 SHEETS | STA. | TO STA.

F.A.I. RTE.	SECTION	COUNTY	TOTAL SHEETS	SHEET NO.
155	(54-4HB)D	LOGAN	133	87
		CONTRACT NO. 72220		
		ILLINOIS	FED. AID PROJECT	

STATE OF ILLINOIS

[redacted]

ROUTE NO.	SECTION	COUNTY	TOTAL SHEETS	SHEET NO.
S.B.I. F.A.I-55	54-4HB	LOGAN	63	30
FED. ROAD DIST. NO. 7		ILLINOIS	FED. AID PROJECT	

SHEET NO. 17
36 SHEETS

TOP OF CURTAIN WALL ELEVATIONS NO. ABUT.

Location	Elev. A	Elev. B
East Wall	589.12	589.12
West Wall	586.89	586.86

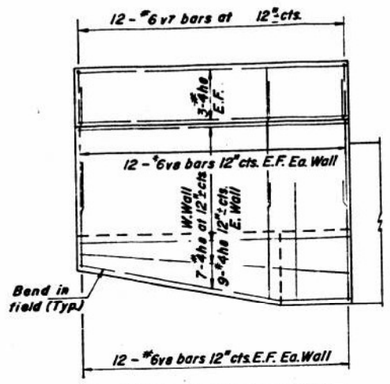

WING WALL REINFORCEMENT

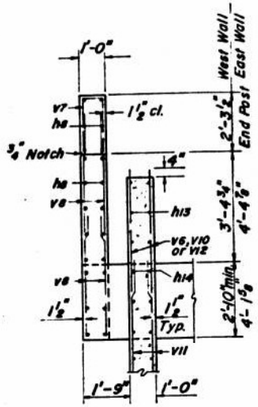

SECTION D-D

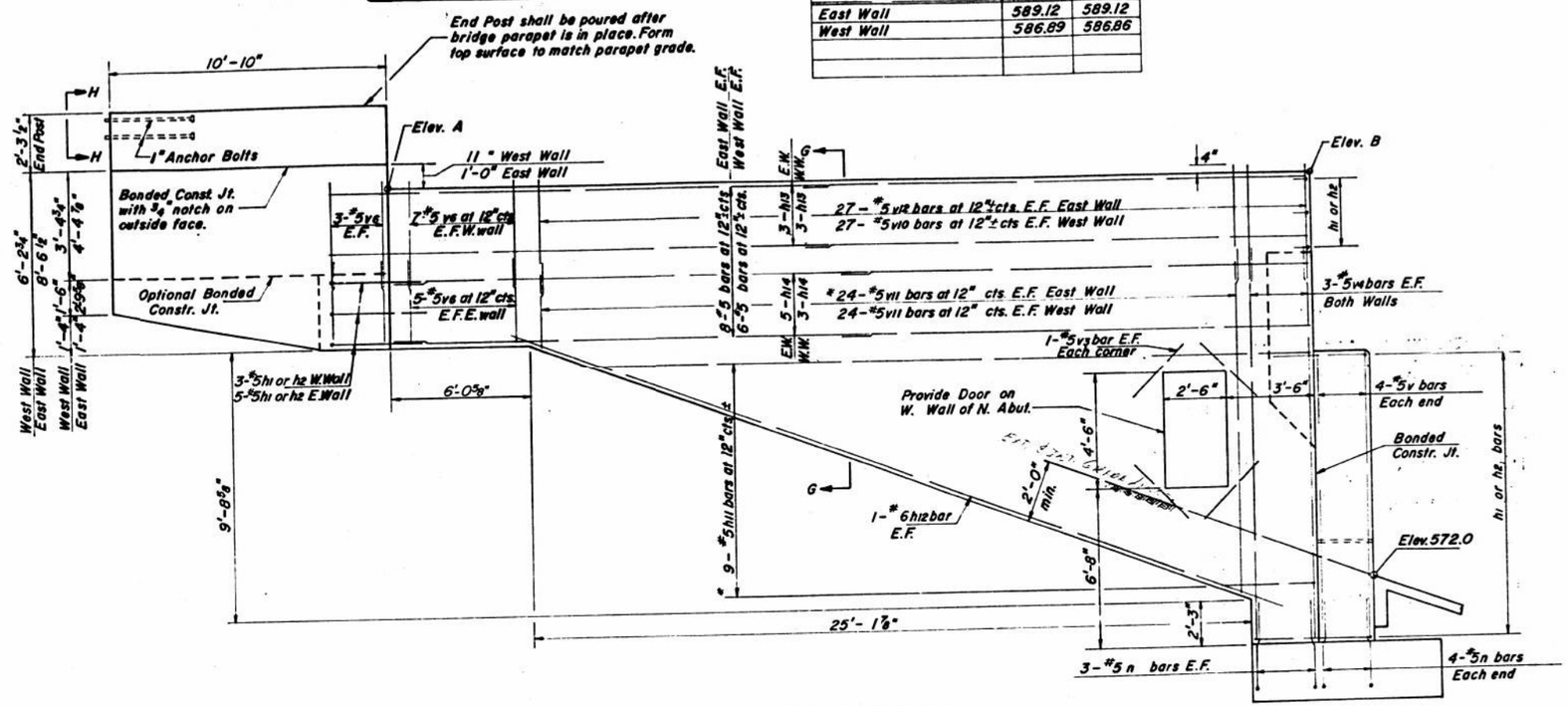

SIDE ELEVATION
Looking East

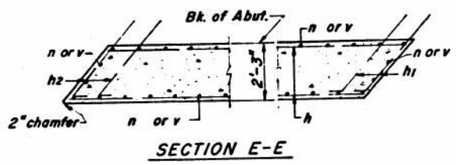

SECTION E-E

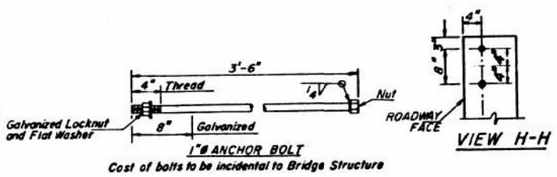

1" ø ANCHOR BOLT
Cost of bolts to be incidental to Bridge Structure

VIEW H-H

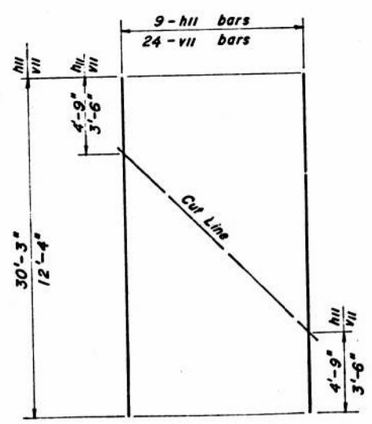

FIELD CUTTING DIAGRAM
* Order h11 & v11 bars full length. Cut to fit as shown and use remainder of bars in other face.

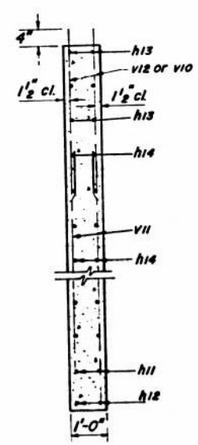

SECTION G-G

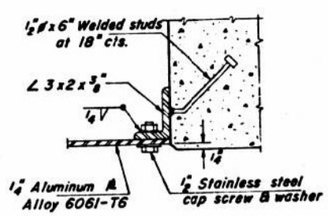

SECTION J-J

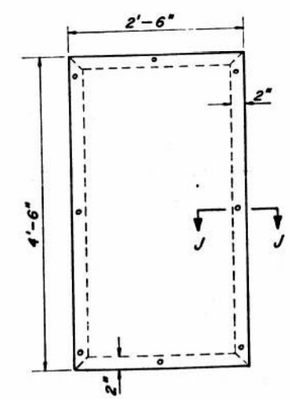

DOOR ELEVATION
(Cost of door and frame are incidental)

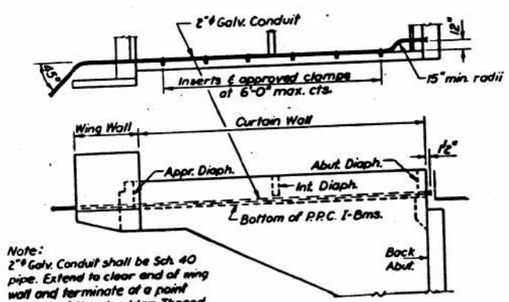

Note:
2" ø Galv. Conduit shall be Sch. 40 pipe. Extend to clear end of wing wall and terminate at a point outside of the shoulder. Thread and cap each end. Cost incidental.

VAULTED ABUTMENT

APPR BENT-PILE DATA

Type	Concrete Piles
Capacity	30 Tons
Est. Length	47'
No. Req'd.	9

ABUT.- PILE DATA

Type	Concrete Piles
Capacity	40 Tons
Est. Length	36'
No. Req'd.	21 + 1 Test Pile

DESIGNED	G.E.P.
CHECKED	D.V.K.
DRAWN	R.H.H.
CHECKED	G.E.P.

19
EXAMINED — ENGINEER OF BRIDGE AND TRAFFIC STRUCTURES
PASSED — ENGINEER OF DESIGN
APPROVED — CHIEF HIGHWAY ENGINEER

1-1-2020

FOR INFORMATION ONLY

NORTH ABUTMENT DETAIL
RDWY. "B"
F.A.I-55 SEC. 54-4HB
LOGAN COUNTY
STA. 16+55.68

MODEL: Default
FILE NAME: P:\Transportation\4854 - IDOT PTB 198-073 D600\D04\CADD 56\054-0050-72220-054-EXISTING PLANS - Copy (17).dgn

CIVIL DESIGN, INC. WBE / DBE EFFINGHAM, IL LICENSE #184.003222	USER NAME = $USER$	DESIGNED -	REVISED -
		DRAWN -	REVISED -
	PLOT SCALE = $SCALE$	CHECKED -	REVISED -
	PLOT DATE = 12/19/2024	DATE -	REVISED -

STATE OF ILLINOIS
DEPARTMENT OF TRANSPORTATION

EXISTING PLANS
STRUCTURE NO. 054-0050

SCALE: | SHEET 54 OF 63 SHEETS | STA. | TO STA.

F.A.I. RTE.	SECTION	COUNTY	TOTAL SHEETS	SHEET NO.
155	(54-4HB)D	LOGAN	133	88
		CONTRACT NO. 72220		
		ILLINOIS	FED. AID PROJECT	

FORM NO. B. D. 137 REV. 9-00

BRIDGE FOUNDATION BORING LOG

PROJECT _____ BRIDGE SUPPLEMENTAL INTERCHANGE Date NOVEMBER 1971

ROUTE FAI-55 Bored By BILL CARTER

SEC. 54-4HB(STRUCTURE "B") STA. 23+44.04 Roadway ℄ SBML ~~68210 FAI-55~~ Checked By G.A.GARRELTS

COUNTY LOGAN

Boring No. 1
Station 15+48
Offset 12'LT

Surface Water El. _____
Groundwater El. at Completion _____
After ___ Hours _____

Description	Elevation	N	Qu t/s.f.	w (%)
Ground Surface 569.9	0			
BLACK SILTY CLAY 567.9				
BROWN SILTY CLAY VERY STIFF 565.4		7	3.3 S	21
BROWN SAND LOAM	-5	10	-	
MEDIUM 560.4		10	-	
BROWN & GRAY SILT LOAM VERY LOOSE 557.9	-10	4	-	
GRAY SILTY CLAY W/LAYERS OF SILT		5	1.3 B	25
STIFF	-15	3	1.2 B	28
		5	1.3 B	28
547.9	-20	7	1.2 S	26
GRAY SILT LOAM LOOSE 545.4		7	-	
GRAY SILTY CLAY SOFT 542.9	-25	4	0.7 B	25
GREENISH CLAY TILL		4	1.0 B	18
STIFF 537.9	-30	4	1.0 S	12
GRAY SAND VERY LOOSE		3	-	
SOME GRAVEL 532.9	-35	4	-	
GRAY SAND & GRAVEL		23	-	
MEDIUM 527.9	-40	17	-	
GRAY CLAY W/SILT LAYERS STIFF 525.4	-45	18	2.5 S	24

– Standard Penetration Test – ows per foot to drive 2" .D. Split Spoon Sampler 12" with 0# hammer falling 30".

Qu – Unconfined Compressive Strength – t/sf

w – Water Content – percentage of oven dry weight – %.

Type failure:
B – Bulge Failure
S – Shear Failure
E – Estimated Value
P – Penetrometer

FORM NO. B. D. 137 REV. 9-00

BRIDGE FOUNDATION BORING LOG

FAI-55
54-4HB(STRUCTURE"B")
LOGAN COUNTY
BORING #1

Description	Elevation	N	Qu t/s.f.	w (%)
GRAY SAND W/4" LAYER OF SILT DENSE 522.9	-45	48	-	
GRAY CLAY TILL		46	7.8 S	9
HARD	-50	41	8.3 S	10
		68	11.0 B	9
513.9	-55	69	11.0 B	9
BORING COMPLETED	-60			
	-65			
	-70			
	-75			
	-80			
	-85			
	-90			
	-95			

1-1-2020

MODEL: Default
FILE NAME: P:\Transportation\4654 - IDOT PTB 198-023 D6\BW04\CADD_50\054-0050-7220\-053-Borings1.dgn

CIVIL DESIGN, INC.
WBE / DBE
EFFINGHAM, IL
LICENSE #184.003222

USER NAME = $USER$	DESIGNED -	REVISED -
	DRAWN -	REVISED -
PLOT SCALE = $SCALE$	CHECKED -	REVISED -
PLOT DATE = 12/19/2024	DATE -	REVISED -

STATE OF ILLINOIS
DEPARTMENT OF TRANSPORTATION

EXISTING BORING LOGS
STRUCTURE NO. 054-0050

SCALE: SHEET 55 OF 63 SHEETS STA. TO STA.

F.A.I. RTE.	SECTION	COUNTY	TOTAL SHEETS	SHEET NO.
155	(54-4HB)D	LOGAN	133	89
		CONTRACT NO. 72220		
		ILLINOIS	FED. AID PROJECT	

FORM NO. B. D. 137 REV. 9-60

BRIDGE FOUNDATION BORING LOG

PROJECT _____ BRIDGE SUPPLEMENTAL INTERCHANGE Date NOVEMBER 1971

ROUTE FAI-55 Bored By BILL CARTER

SEC. 54-4HB (STRUCTURE "B") STA. ~~68+40~~ Checked By G.A.GARRELTS

COUNTY LOGAN

Boring No. 2
Station 1649
Offset 12' RT

Surface Water El. _____
Groundwater El. at Completion _____
After ____ Hours _____

Ground Surface 570.2

Description	Elevation	N	Qu t/s.f.	w (%)
BLACK SILTY CLAY	0			
568.2				
BROWN SILTY CLAY		14	4.5 S	17
HARD	-5			
SOFT		4	0.9 B	23
563.2				
BROWN SAND LOAM VERY LOOSE		4	-	
560.7				
BROWN & GRAY SILT LOAM	-10	7	-	
LOOSE				
558.2				
GRAY SILTY CLAY STIFF		9	1.2 S	20
	-15	4	1.4 B	8
		5	1.4 B	8
	-20	8	1.0 S	9
548.2				

Description	Elevation	N	Qu t/s.f.	w (%)
GRAY SILTY CLAY LOAM		4	0.8 B	19
	-25			
SOFT		4	0.5 B	21
543.2				
BLUISH GRAY CLAY TILL VERY SOFT		3	0.3 B	21
540.7				
GRAY CLAY TILL	-30	5	4.5 S	11
HARD		18	6.4 S	12
	-35	53	9.5 S	10
533.2				
GRAY FINE SAND DENSE		32	-	
530.7				
GRAY SAND & GRAVEL DENSE	-40	45	-	
528.2				
GRAY CLAY TILL HARD		66	5.0 S	14
	-45			

-Standard Penetration Test- ows per foot to drive 2" D. Split Spoon Sampler 12" with 0# hammer falling 30".

Qu - Unconfined Compressive Strength - t/sf

w - Water Content - percentage of oven dry weight - %.

Type failure:
B - Bulge Failure
S - Shear Failure
E - Estimated Value

FORM NO. B. D. 137 REV. 9-60

BRIDGE FOUNDATION BORING LOG

FAI-55
54-4HB (STRUCTURE "B")
LOGAN COUNTY
BORING #2

Description	Elevation	N	Qu t/s.f.	w (%)
	-45			
GRAY CLAY TILL		95	11.0 S	8
HARD		112	11.2 B	9
	-50			
519.2		100	11.2 B	9
BORING COMPLETED				
	-55			
	-60			
	-65			
	-70			
	-75			
	-80			
	-85			
	-90			
	-95			

1-1-2020

CIVIL DESIGN, INC. WBE / DBE EFFINGHAM, IL LICENSE #184.003222	USER NAME = $USER$	DESIGNED -	REVISED -
		DRAWN -	REVISED -
	PLOT SCALE = $SCALE$	CHECKED -	REVISED -
	PLOT DATE = 12/19/2024	DATE -	REVISED -

STATE OF ILLINOIS
DEPARTMENT OF TRANSPORTATION

EXISTING BORING LOGS
STRUCTURE NO. 054-0050

SCALE: SHEET 56 OF 63 SHEETS STA. TO STA.

F.A.I. RTE.	SECTION	COUNTY	TOTAL SHEETS	SHEET NO.
155	(54-4HB)D	LOGAN	133	90
		CONTRACT NO. 72220		
		ILLINOIS FED. AID PROJECT		

MODEL: Default
FILE NAME: P:\Transportation\4854 - IDOT PTB 198-073 D6\DWG\CADD_50\054-0050-72220-056-Boring2.dgn

FORM NO. B. D. 137 REV. 9-60

BRIDGE FOUNDATION BORING LOG

PROJECT
ROUTE FAI-55
SEC. 54-4HB (STRUCTURE "B")
COUNTY LOGAN

BRIDGE SUPPLEMENTAL INTERCHANGE
STA. ~~682+10 FAI-55~~

Date NOVEMBER 1971
Bored By BILL CARTER
Checked By G.A.GARRELTS

Boring No. 3
Station 17+03
Offset 17' LT

Surface Water El.
Groundwater El. at Completion
After Hours

Description	Elevation	N	Qu t/s.f.	w (%)
Ground Surface 570.2	0			
BLACK SILTY CLAY 568.2				
BROWN & GRAY SILTY CLAY		9	2.9 S	20
STIFF	-5			
		5	1.2 B	24
563.2				
BROWN SANDY LOAM LOOSE 560.7		9	-	-
GRAY SILT LOAM LOOSE 558.2	-10	7	-	-
GRAY SILTY CLAY STIFF 555.7		5	1.2 S	23
GRAY SILT LOAM LOOSE	-15	5	-	-
550.7		5	-	-
GRAY SILTY CLAY LOAM SOFT 548.2	-20	4	0.8 B	22
GRAY CLAY TILL VERY STIFF 545.7		9	3.7 B	18
GREENISH GRAY CLAY TILL	-25	8	1.2 B	16
STIFF		10	1.9 B	13
HARD 538.2	-30	23	4.0 S	10
GRAY SAND VERY LOOSE 535.7		2	-	-
GRAY COARSE SAND W/GRAVEL MEDIUM	-35	25	-	-
DENSE	-40	47	-	-
VERY DENSE 528.2		62	-	-
GRAY SILT LOAM VERY DENSE 525.7	-45	63	-	-

-Standard Penetration Test-
ows per foot to drive 2"
.D. Split Spoon Sampler 12" with
0# hammer falling 30".

Qu - Unconfined Compressive Strength - t/sf

w - Water Content - percentage of oven dry weight - %.

Type failure:
B - Bulge Failure
S - Shear Failure
E - Estimated Value
P - Penetrometer

FORM NO. B. D. 137 REV. 9-60

BRIDGE FOUNDATION BORING LOG

FAI-55
54-4HB (STRUCTURE "B")
LOGAN COUNTY
BORING #3

Description	Elevation	N	Qu t/s.f.	w (%)
GRAY SAND & GRAVEL MEDIUM	-45	25	-	-
523.2				
GRAY CLAY TILL		94	11.0 B	8
HARD	-50	97	10.9 B	8
516.7		83	11.5 S	8
BORING COMPLETED	-55			
	-60			
	-65			
	-70			
	-75			
	-80			
	-85			
	-90			
	-95			

1-1-2020

CIVIL DESIGN, INC. WBE / DBE
EFFINGHAM, IL
LICENSE #184.003222

USER NAME = $USER$	DESIGNED -	REVISED -
	DRAWN -	REVISED -
PLOT SCALE = $SCALE$	CHECKED -	REVISED -
PLOT DATE = 12/19/2024	DATE -	REVISED -

STATE OF ILLINOIS
DEPARTMENT OF TRANSPORTATION

EXISTING BORING LOGS
STRUCTURE NO. 054-0050

SCALE: SHEET 57 OF 63 SHEETS STA. TO STA.

F.A.I. RTE.	SECTION	COUNTY	TOTAL SHEETS	SHEET NO.
155	(54-4HB)D	LOGAN	133	91

CONTRACT NO. 72220

ILLINOIS FED. AID PROJECT

MODEL: Default
FILE NAME: P:\Transportation\4854 - IDOT PTB 198-073 D600W04\CADD_50\054-0050-72220-057-Boring3.dgn

BRIDGE FOUNDATION BORING LOG

PROJECT
ROUTE FAI-55
SEC. 54-4HB(STRUCTURE "B")
COUNTY LOGAN

BRIDGE SUPPLEMENTAL INTERCHANGE
STA. [illegible]40

Date NOVEMBER 1971
Bored By BILL CARTER
Checked By G.A.GARRELTS

Boring No. 4
Station 17+60
Offset 12' RT

Surface Water El.
Groundwater El. at Completion
After Hours

Description	Elevation	N	Qu t/s.f.	w (%)
Ground Surface 569.9	0			
BLACK SILTY CLAY 567.9				
BROWN & GRAY SILTY CLAY STIFF 565.4		8	1.5 S	21
BROWN & GRAY SILTY CLAY LOAM STIFF 562.9	-5	4	1.0 B	25
BROWN SANDY LOAM LOOSE 560.4		7	-	-
GRAY SILT LOAM LOOSE	-10	9	-	-
		5	-	-
	-15	5	-	-
		5	-	-
GRAY SILTY CLAY SOFT 547.9	-20	4	0.9 B	27
GREENISH CLAY TILL		6	1.0 B	19
STIFF	-25	6	1.5 B	19
		6	2.3 S	15
GRAY CLAY TILL 537.9	-30	15	3.7 B	11
GRAY SAND & GRAVEL MEDIUM 535.4		11	-	-
GRAY SAND & GRAVEL COBBLES	-35	150	-	-
VERY DENSE		108	-	-
	-40	59	-	-
GRAY SILT LOAM VERY DENSE	-45	57	-	-

-Standard Penetration Test-
ws per foot to drive 2"
D. Split Spoon Sampler 12" with
)# hammer falling 30".

Qu - Unconfined Compressive Strength - t/sf

w - Water Content - percentage of oven dry weight - %.

Type failure:
B - Bulge Failure
S - Shear Failure
E - Estimated Value
P - Penetrometer

BRIDGE FOUNDATION BORING LOG

FAI-55
54-4HB-(STRUCTURE "B")
LOGAN COUNTY
BORING #4

Description	Elevation	N	Qu t/s.f.	w (%)
GRAY SILT LOAM VERY DENSE 522.9	-45	88	-	
GRAY CLAY TILL		106	10.0 S	8
HARD 518.9	-50	103	11.2 B	8
BORING COMPLETED	-55			
	-60			
	-65			
	-70			
	-75			
	-80			
	-85			
	-90			
	-95			

1-1-2020

CIVIL DESIGN, INC. WBE / DBE EFFINGHAM, IL LICENSE #184.003222	USER NAME = $USER$	DESIGNED -	REVISED -
		DRAWN -	REVISED -
	PLOT SCALE = $SCALE$	CHECKED -	REVISED -
	PLOT DATE = 12/19/2024	DATE -	REVISED -

STATE OF ILLINOIS
DEPARTMENT OF TRANSPORTATION

EXISTING BORING LOGS
STRUCTURE NO. 054-0050

SCALE: SHEET 58 OF 63 SHEETS STA. TO STA.

F.A.I. RTE.	SECTION	COUNTY	TOTAL SHEETS	SHEET NO.
155	(54-4HB)D	LOGAN	133	92
		CONTRACT NO. 72220		
	ILLINOIS	FED. AID PROJECT		

MODEL: Default
FILE NAME: P:\Transportation\4854 - IDOT PTB 198-073 D6\0W04\CADD_50\054-0050-72220-058-Borings4.dgn

BRIDGE FOUNDATION BORING LOG

PROJECT
ROUTE FAI-55
SEC. 54-4HB(STRUCTURE "D")
COUNTY LOGAN

BRIDGE SUPPLEMENTAL INTERCHANGE
STA. ~~760+40~~

Date NOVEMBER 1971
Bored By BILL CARTER
Checked By G.A.GARRELTS

Boring No. 5
Station 15+73.5
Offset 16' RT

Surface Water El.
Groundwater El. at Completion
After Hours

Description	Elevation	N	Qu t/s.f.	w (%)
Ground Surface 568.3	0			
BLACK SILTY CLAY				
566.8				
BROWN SILTY CLAY				
HARD		8	4.5 S	15
563.8				
BROWN & GRAY SILTY CLAY STIFF	-5	5	1.0 B	24
561.3				
BROWN & GRAY SILT LOAM		6	-	
LOOSE	-10	5	-	
556.3				
GRAY SILT LOAM		2	-	
VERY LOOSE	-15	2	-	
551.3				
GRAY SILTY CLAY		3	0.2 B	25
VERY SOFT				
548.8				
GREENISH CLAY TILL STIFF	-20	5	1.4 S	21
GREENISH CLAY TILL	-25	8	1.7 B	11
STIFF		6	1.9 B	17
538.8				
GRAY CLAY TILL HARD	-30	62	9.8 S	10
533.8				
GRAY SAND & GRAVEL DENSE	-35	34	-	-
		33	-	-
	-40	45	-	-
526.3				
GRAY CLAY TILL HARD	-45	110	11.0 B	8

-Standard Penetration Test-
ows per foot to drive 2"
D. Split Spoon Sampler 12" with
0# hammer falling 30".

Qu-Unconfined Compressive Strength-t/sf

w-Water Content-percentage of oven dry weight-%.

Type failure:
B-Bulge Failure
S-Shear Failure
E-Estimated Value
P-Penetrometer

BRIDGE FOUNDATION BORING LOG

FAI-55
54-4HB (STRUCTURE "D")
LOGAN COUNTY
BORING #5

Description	Elevation	N	Qu t/s.f.	w (%)
	-45			
GRAY CLAY TILL		86	11.0 B	9
		93	11.2 B	8
HARD	-50			
517.3		108	11.2 S	9
BORING COMPLETED				
	-55			
	-60			
	-65			
	-70			
	-75			
	-80			
	-85			
	-90			
	-95			

1-1-2020

CIVIL DESIGN, INC.
WBE / DBE
EFFINGHAM, IL
LICENSE #184.003222

USER NAME = $USER$	DESIGNED -	REVISED -
	DRAWN -	REVISED -
PLOT SCALE = $SCALE$	CHECKED -	REVISED -
PLOT DATE = 12/19/2024	DATE -	REVISED -

STATE OF ILLINOIS
DEPARTMENT OF TRANSPORTATION

EXISTING BORING LOGS
STRUCTURE NO. 054-0050

SCALE: SHEET 59 OF 63 SHEETS STA. TO STA.

F.A.I. RTE.	SECTION	COUNTY	TOTAL SHEETS	SHEET NO.
155	(54-4HB)D	LOGAN	133	93
		CONTRACT NO. 72220		
	ILLINOIS	FED. AID PROJECT		

MODEL: Default
FILE NAME: P:\Transportation\4854 - IDOT PTB 198-073 D6\0W04\CADD_56\054-0050-72220-059-Borings3.dgn

FORM NO. B. D. 137 REV. 9-60

BRIDGE FOUNDATION BORING LOG

PROJECT: _____ BRIDGE: SUPPLEMENTAL INTERCHANGE Date: NOVEMBER 1971

ROUTE: FAI-55 Bored By: BILL CARTER

SEC. 54-4HB (STRUCTURE "D") STA. ~~662+40.6 FAI-55~~ Checked By: G.A.GARRELTS

COUNTY: LOGAN

Boring No. 6
Station 16+47
Offset 9' RT

Surface Water El. _____
Groundwater El. at Completion _____
After ___ Hours _____

Description	Elevation	N	Qu t/s.f.	w (%)
Ground Surface 570.2	0			
BLACK SILTY CLAY 568.2				
BROWN SILTY CLAY HARD 565.7		11	4.5 S	22
BROWN & GRAY SILTY CLAY LOAM STIFF 563.2	-5	5	1.2 S	23
BROWN SANDY LOAM LOOSE 560.7		9	-	-
BROWN & GRAY SILT LOAM VERY LOOSE 558.2	-10	4	-	-
GRAY SILTY LOAM LOOSE	-15	6	-	-
		3	-	-
		2	-	-
VERY LOOSE 550.7				
GRAY SILTY CLAY STIFF 548.2	-20	7	2.5 B	23
GRAY CLAY TILL STIFF	-25	8	2.1 B	21
		6	1.9 B	1
		13	4.5 S	12
HARD 538.2	-30	26	7.0 S	9
GRAY SANDY LOAM LOOSE 535.7		7	-	-
GRAY SAND & GRAVEL DENSE	-35	42	-	-
		47	-	-
VERY DENSE W/COBBLES 528.2	-40	101	-	-
GRAY CLAY TILL W/LAYER OF SAND HARD	-45	82	8.0 S	8

—Standard Penetration Test—
ows per foot to drive 2"
.D. Split Spoon Sampler 12" with
0# hammer falling 30".

Qu—Unconfined Compressive Strength—t/sf

w—Water Content—percentage of oven dry weight—%.

Type failure:
B—Bulge Failure
S—Shear Failure
E—Estimated Value
P—Penetrometer

FORM NO. B. D. 137 REV. 9-60

BRIDGE FOUNDATION BORING LOG

FAI-55
54-4HB (STRUCTURE "D")
LOGAN COUNTY
BORING #6

Description	Elevation	N	Qu t/s.f.	w (%)
GRAY	-45			
CLAY TILL		85	10.3 S	28
		96	10.7 S	28
HARD	-50			
519.2		98	11.0 B	24
BORING COMPLETED				
	-55			
	-60			
	-65			
	-70			
	-75			
	-80			
	-85			
	-90			
	-95			

1-1-2020

MODEL: Default
FILE NAME: P:\Transportation\4894 - IDOT PTB 198-073 D6\0\Out\CADD_50\054-0050-72220-060-Borings6.dgn

CDI CIVIL DESIGN, INC. WBE / DBE EFFINGHAM, IL LICENSE #184.003222

USER NAME = $USER$	DESIGNED -	REVISED -	
	DRAWN -	REVISED -	
PLOT SCALE = $SCALE$	CHECKED -	REVISED -	
PLOT DATE = 12/19/2024	DATE -	REVISED -	

STATE OF ILLINOIS
DEPARTMENT OF TRANSPORTATION

EXISTING BORING LOGS
STRUCTURE NO. 054-0050

SCALE: SHEET 60 OF 63 SHEETS STA. TO STA.

F.A.I. RTE.	SECTION	COUNTY	TOTAL SHEETS	SHEET NO.
155	(54-4HB)D	LOGAN	133	94
		CONTRACT NO. 72220		
		ILLINOIS FED. AID PROJECT		

FORM NO. B. D. 137 REV. 9-60

BRIDGE FOUNDATION BORING LOG

PROJECT _____ BRIDGE SUPPLEMENTAL INTERCHANGE Date NOVEMBER 1971

ROUTE FAI-55 Bored By BILL CARTER

SEC. 54-4HB(STRUCTURE "D") STA. ~~698.40~~ Checked By G.A.GARRELTS

COUNTY LOGAN

Boring No. 7
Station 17+39.5
Offset 9' RT.

Surface Water El. _____
Groundwater El. at Completion _____
After ____ Hours _____

Description	Elevation	N	Qu t/s.f.	w (%)
Ground Surface 570.5	0			
BLACK SILTY CLAY				
568.5				
BROWN SILTY CLAY VERY STIFF		11	3.0 S	22
566.0				
BROWN SANDY LOAM	-5	3	-	-
VERY LOOSE 563.5				
BROWN & GRAY SILT LOAM		6	-	-
LOOSE	-10	3	-	-
VERY LOOSE 558.5				
GRAY SILTY CLAY LOAM		6	1.6 S	26
STIFF	-15	4	1.3 B	28
		5	1.0 S	30
	-20	4	1.3 S	25
548.5				

Description	Elevation	N	Qu t/s.f.	w (%)
GRAY SILTY CLAY		3	0.6 B	23
SOFT 546.0	-25			
GREENISH GRAY CLAY TILL STIFF		5	1.0 B	17
VERY SOFT 541.0		2	0.3 B	18
GRAY CLAY TILL HARD	-30	18	5.3 S	10
VERY STIFF		19	3.7 S	10
HARD	-35	17	4.8 B	13
531.5		57	10.9 B	10
GRAY SAND & GRAVEL VERY DENSE	-40	58	-	-
		69	-	-
526.0	-45			

– Standard Penetration Test – ows per foot to drive 2" D. Split Spoon Sampler 12" with 0# hammer falling 30".

Qu – Unconfined Compressive Strength – t/sf

w – Water Content – percentage of oven dry weight – %.

Type failure:
B – Bulge Failure
S – Shear Failure
E – Estimated Value
P – Penetrometer

FORM NO. B. D. 137 REV. 9-60

BRIDGE FOUNDATION BORING LOG

FAI-55
54-4HB (STRUCTURE "D")
LOGAN COUNTY
BORING #7

Description	Elevation	N	Qu t/s.f.	w (%)
GRAY	-45			
CLAY TILL		70	9.0 S	9
		108	11.0 S	8
HARD	-50			
519.5		100	9.4 S	-
BORING COMPLETED				
	-55			
	-60			
	-65			
	-70			
	-75			
	-80			
	-85			
	-90			
	-95			

1-1-2020

MODEL: Default
FILE NAME: P:\Transportation\4854 - IDOT PTB 198-023 D60\W04\CADD_50\054-0050-72220-061-Boring2.dgn

CDI CIVIL DESIGN, INC. WBE / DBE EFFINGHAM, IL LICENSE #184.003222

USER NAME = $USER$	DESIGNED -	REVISED -	
	DRAWN -	REVISED -	
PLOT SCALE = $SCALE$	CHECKED -	REVISED -	
PLOT DATE = 12/19/2024	DATE -	REVISED -	

STATE OF ILLINOIS
DEPARTMENT OF TRANSPORTATION

EXISTING BORING LOGS
STRUCTURE NO. 054–0050

SCALE: SHEET 61 OF 63 SHEETS STA. TO STA.

F.A.I. RTE.	SECTION	COUNTY	TOTAL SHEETS	SHEET NO.
155	(54-4HB)D	LOGAN	133	95

CONTRACT NO. 72220

ILLINOIS FED. AID PROJECT

BRIDGE FOUNDATION BORING LOG

PROJECT _____ BRIDGE SUPPLEMENTAL Date NOVEMBER 1971

ROUTE FAI-55 INTERCHANGE Bored By BILL CARTER

SEC. 54-4HB (STRUCTURE "D") STA. ~~[illegible]~~ Checked By G.A.GARRELTS

COUNTY LOGAN

Boring No. 8
Station 18+13.5
Offset 16' RT

Surface Water El. ____
Groundwater El. at Completion ____
After ____ Hours ____

Description	Elevation	N	Qu t/s.f.	w (%)
Ground Surface 571.0	0			
BLACK SILTY CLAY 569.0				
BROWN & GRAY SILTY CLAY HARD 566.5		10	4.1 S	23
BROWN & GRAY SILT LOAM LOOSE 564.0	-5	5	-	-
BROWN SAND LOAM MEDIUM 561.5		11	-	-
GRAY SILT LOAM VERY LOOSE 559.0	-10	4	-	-
GRAY SILTY CLAY W/SILT LENSES STIFF 556.5		7	1.9 S	24
GRAY SILT LOAM VERY LOOSE 554.0	-15	3	-	-
GRAY SILTY CLAY LOAM SOFT 549.0	-20	3	0.5 B	24
		5	0.8 B	21

Description	Elevation	N	Qu t/s.f.	w (%)
BLUISH GRAY CLAY TILL STIFF 544.0		8	1.9 B	19
	-25	4	1.2 B	16
GRAY CLAY TILL HARD 541.5		47	6.6 S	10
GRAY SAND & GRAVEL MEDIUM	-30	10	-	-
DENSE		42	-	-
	-35	41	-	-
VERY DENSE 531.5		58	-	-
GRAY CLAY TILL HARD	-40	67	9.9 S	8
		77	7.9 S	8
	-45			

-Standard Penetration Test-
ows per foot to drive 2"
D. Split Spoon Sampler 12" with
0# hammer falling 30".

Qu-Unconfined Compressive Strength-t/sf

w-Water Content-percentage of oven dry weight-%.

Type failure:
B-Bulge Failure
S-Shear Failure
E-Estimated Value
P-Penetrometer

BRIDGE FOUNDATION BORING LOG

FAI-55
54-4HB (STRUCTURE "D")
LOGAN COUNTY
BORING #8

Description	Elevation	N	Qu t/s.f.	w (%)
GRAY CLAY TILL	-45	104	9.2 S	16
HARD 522.5		125	11.5 B	8
BORING COMPLETED	-50			
	-55			
	-60			
	-65			
	-70			
	-75			
	-80			
	-85			
	-90			
	-95			

1-1-2020

MODEL: Default
FILE NAME: P:\Transportation\4854 - IDOT PTB 198-023 D6\0\NO\CAD\D_50\054-0050-72220-062-Borings3.dgn

CDI CIVIL DESIGN, INC. WBE / DBE EFFINGHAM, IL LICENSE #184.003222

USER NAME = $USER$	DESIGNED -	REVISED -
	DRAWN -	REVISED -
PLOT SCALE = $SCALE$	CHECKED -	REVISED -
PLOT DATE = 12/19/2024	DATE -	REVISED -

STATE OF ILLINOIS
DEPARTMENT OF TRANSPORTATION

EXISTING BORING LOGS
STRUCTURE NO. 054-0050

SCALE: SHEET 62 OF 63 SHEETS STA. TO STA.

F.A.I. RTE.	SECTION	COUNTY	TOTAL SHEETS	SHEET NO.
155	(54-4HB)D	LOGAN	133	96
		CONTRACT NO. 72220		
	ILLINOIS	FED. AID PROJECT		

SOUNDING

TOTAL DEPTH: 13.504 ft
SITE: NW-155
SOUNDING
COMPANY: Illinois DOT
FILENAME: C-Demo-1(002).DAT

PROBE ID: 4644.187.X
TEST ID: C-NW-155
PROJECT: North of Lincoln
LOCATION: NW Corner

Station 17+60 37' Left
Ground Elevation: +/-589.0

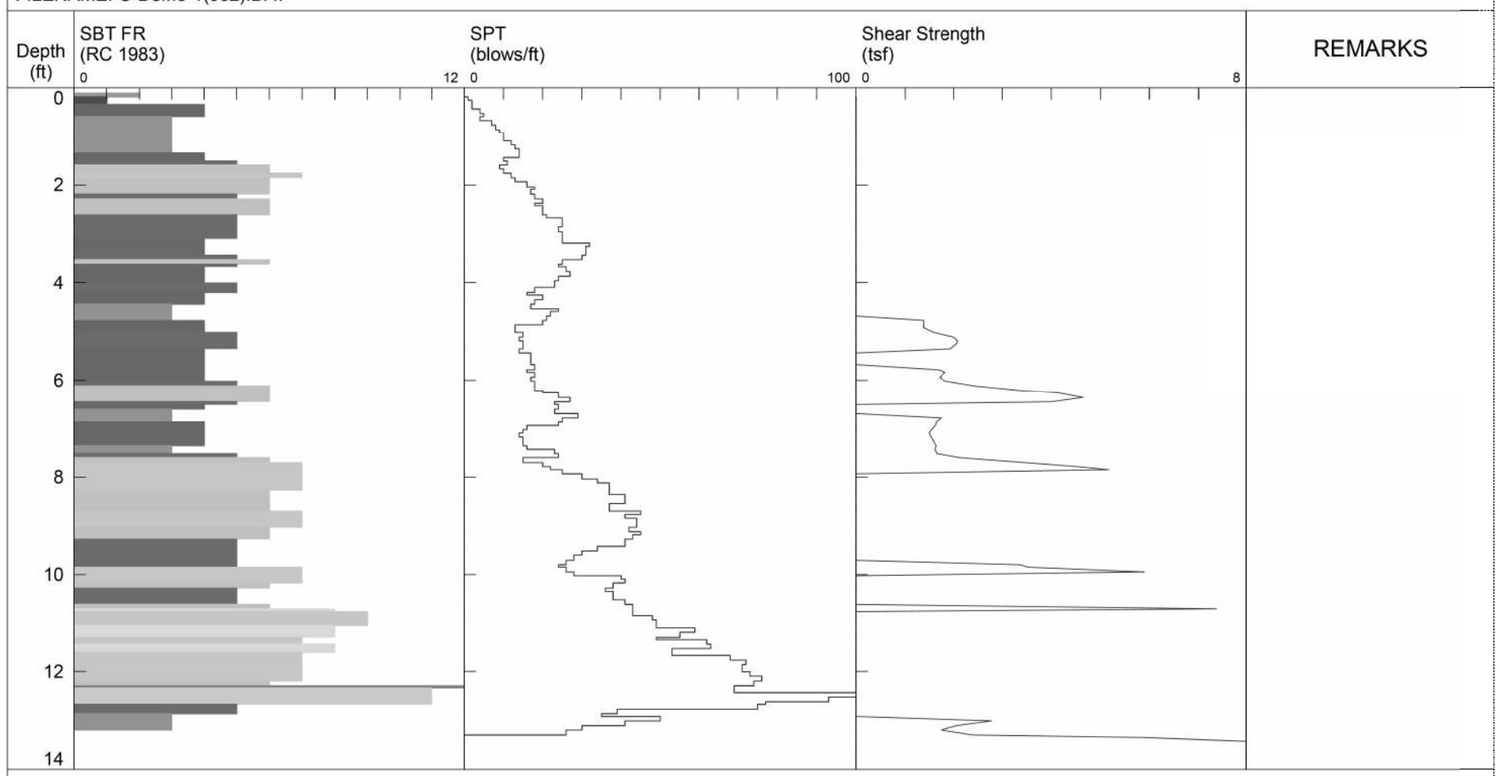

NOTES:: Example of notes

1 sensitive fine grained
2 organic material
3 clay
4 silty clay to clay
5 clayey silt to silty clay
6 sandy silt to clayey silt
7 silty sand to sandy silt
8 sand to silty sand
9 sand
10 gravelly sand to sand
11 very stiff fine grained (*)
12 sand to clayey sand (*)

*SBT/SPT CORRELATION: UBC-1983

1-1-2020

MODEL: Default
FILE NAME: P:\Transportation\4854 - IDOT PTB 198-023 D6\0\04\CAD\D_50\054-0050-72220-063-Borings9.dgn

CDI CIVIL DESIGN, INC. WBE / DBE EFFINGHAM, IL LICENSE #184.003222

USER NAME = $USER$	DESIGNED -	REVISED -	
	DRAWN -	REVISED -	
PLOT SCALE = $SCALE$	CHECKED -	REVISED -	
PLOT DATE = 12/19/2024	DATE -	REVISED -	

STATE OF ILLINOIS
DEPARTMENT OF TRANSPORTATION

EXISTING SOUNDING LOG
STRUCTURE NO. 054-0050

SCALE: SHEET 63 OF 63 SHEETS STA. TO STA.

F.A.I. RTE.	SECTION	COUNTY	TOTAL SHEETS	SHEET NO.
155	(54-4HB)D	LOGAN	133	97
		CONTRACT NO. 72220		
		ILLINOIS FED. AID PROJECT		

Benchmark: Cut "□" in E. end of north parapet, West Abutment wall of SN 054-0051 @ Sta. 18+23.45, 22.66' Rt., Ramp "D". Elev. 614.32.

Existing Structure: S.N. 054-0051, the existing structure is a 3 span continuous composite steel girder bridge, consisting of curved welded steel ℄ girders. The original structure was built in 1973 Supplemental Freeway E.B. Ramp "D", Section 54-4HB and the deck has waterproofing membrane system and bituminous concrete wearing surface. The bridge is curved and measures 249'-8 3/4" back to back abutment (along tangent), 28'-0" out to out, with skew of 22°32'35".

Traffic Control: The bridge will be closed during construction.

Salvage: Existing aluminum railing and deliver to bridge crew yard in Springfield.

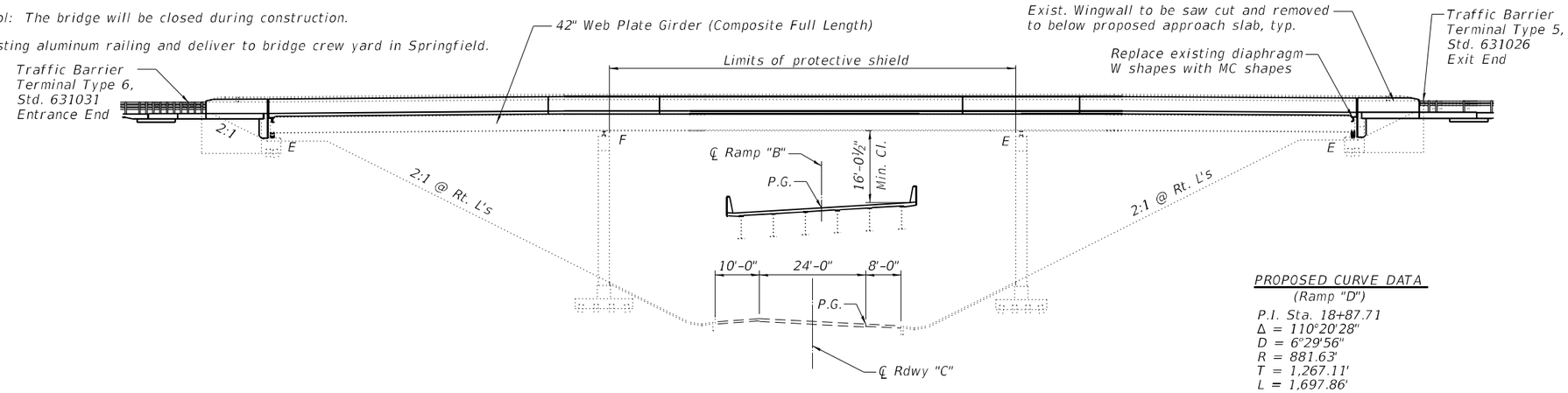

ELEVATION

PROPOSED CURVE DATA
(Ramp "D")

P.I. Sta. 18+87.71
Δ = 110°20'28"
D = 6°29'56"
R = 881.63'
T = 1,267.11'
L = 1,697.86'
E = 662.01'
S.E. = 0.078'/'
P.C. Sta. 6+20.60
P.C. Sta. 23+18.46

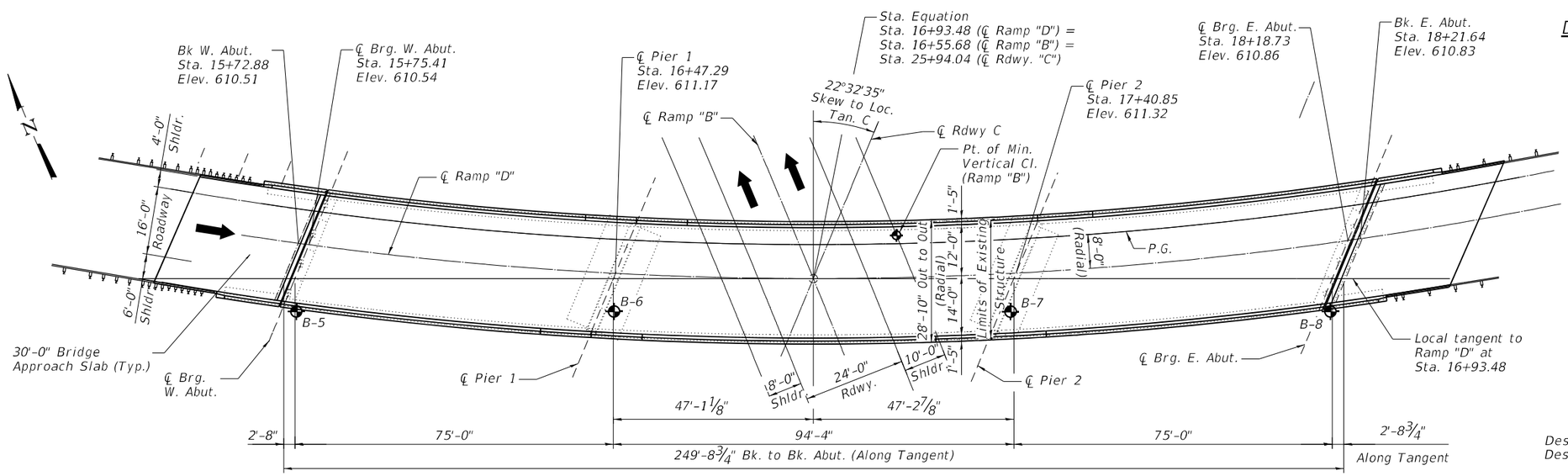

PLAN

DESIGN SPECIFICATIONS (New Const.)

2002 AASHTO Standard Specification for Highway Bridges, 17th Edition & 2006 Seismic Retrofitting Manual for Highway Structures: Part 1 (Bridges)

LOADING HS 20-44 & ALT.

Allow 25#/sq. ft. for future wearing surface.

DESIGN STRESSES

FIELD UNITS (New Construction)

f'c = 3,500 psi
f'c = 4,000 psi (Superstructure Concrete)
fy = 60,000 psi (Reinf.)
fy = 50,000 psi (M270 Grade 50) (Structural Steel)

FIELD UNITS (Existing Construction)

fc = 1,200 psi (Deck Slab)
fc = 1,400 psi (All other concrete)
fs = 20,000 psi (Reinf.)
fs = 20,000 psi (Structural Steel)

SEISMIC DATA

Seismic Retrofit Category (SRC) = A
Design Spectral Acceleration at 1.0 sec. (SD1) = 0.132g
Design Spectral Acceleration at 0.2 sec. (SDS) = 0.224g
Soil Site Class = D
Performance Level (PL) = PL1

Notes:
All transverse dimensions are radial unless noted otherwise.

All longitudinal dimensions are measured along the Local Tangent unless noted otherwise.

APPROVED
For Structural Adequacy Only
Engineer of Bridges & Structures

Plans prepared by Civil Design, Inc.
LICENSED STRUCTURAL ENGINEER JASON G. SCHRECKENBERG 081.006845 STATE OF ILLINOIS
Date: 03/14/2025
Expires: 11/30/2026

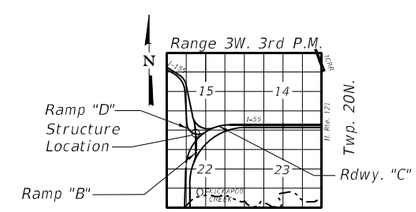

LOCATION SKETCH

GENERAL PLAN & ELEVATION
I-155 S.B. RAMP "D" OVER I-155 N.B.
FAI ROUTE 155 - SECTION (54-4HB)D
LOGAN COUNTY
STA. 16+93.48
STRUCTURE NO. 054-0051

CDI CIVIL DESIGN, INC. WBE / DBE EFFINGHAM, IL LICENSE #184.003222

USER NAME = $USER$	DESIGNED - RT	REVISED -	
	DRAWN - DS	REVISED -	
PLOT SCALE = $SCALE$	CHECKED - JS	REVISED -	
PLOT DATE = 3/27/2025	DATE - 3/2025	REVISED -	

STATE OF ILLINOIS
DEPARTMENT OF TRANSPORTATION

GENERAL PLAN & ELEVATION
STRUCTURE NO. 054-0051

SCALE: | SHEET 1 OF 22 SHEETS | STA. | TO STA.

F.A.I. RTE.	SECTION	COUNTY	TOTAL SHEETS	SHEET NO.
155	(54-4HB)D	LOGAN	133	98
		CONTRACT NO. 72220		
	ILLINOIS	FED. AID PROJECT		

MODEL: Default
FILE NAME: P:\Transportation\4854 - IDOT PYB 198-023 D60\W04\CADD S\054-0051-72220-001-GPE.dgn

GENERAL NOTES

Fasteners shall be ASTM F 3125 Grade A325 Type 1, mechanically galvanized bolts in painted areas. Bolts 3/4 in. diameter, holes 13/16 in. diameter, unless otherwise noted.

Calculated weight of Structural Steel =
3,590 lbs. (AASHTO M270 Grade 50)
2,760 lbs. (AASHTO M270 Grade 36)

All structural steel shall be AASHTO M270 Grade 50 except for connection plates at end diaphragms, MC shapes and stiffener repair plate.

No field welding is permitted except as specified in the contract documents.

Reinforcement bars designated (E) shall be epoxy coated.

Prior to pouring the new concrete deck, all heavy or loose rust, loose mill scale, and other loose detrimental foreign material shall be removed from the surfaces in contact with concrete (SSPC-SP3 standards). Tightly adhered paint may remain unless otherwise noted. Removal shall be accomplished by methods that will not damage the steel and the cost will be paid for according to Article 109.04 of the Standard Specifications.

As directed by the Engineer, existing construction accessories welded to the top flange of beams and girders shall be removed. The weld areas shall be ground flush and inspected for cracks using magnetic particle testing (MT) or dye penetrant testing (PT) by qualified personnel approved by the Engineer. Any cracks that cannot be removed by grinding ¼in. deep shall be identified and reported to the Bureau of Bridges & Structures for further disposition. The cost of removing welded accessories, grinding and inspecting weld areas and grinding cracks will be paid for according to Article 109.04 of the Standard Specifications.

Plan dimensions and details relative to the existing structure have been taken from existing plans are subject to nominal construction variations. The Contractor shall field verify existing dimensions and details affecting new construction and make necessary approved adjustments prior to construction or ordering of materials. Such variations shall not be cause for additional compensation for a change in scope of the work, however, the Contractor will be paid for the quantity actually furnished at the unit price bid for the work.

If the Contractor elects to use cantilever forming brackets on the exterior beams or girders, the brackets shall be placed at the same locations as required for the hardwood blocks in Article 503.06(b) of the Standard Specifications. If additional cantilever forming brackets are required, hardwood blocking shall be wedged between the exterior and first interior beam at each of these additional bracket locations.

Concrete Sealer shall be applied to the face of the concrete abutment diaphragms beneath the superstructure performed joint strip seals.

Existing structural steel shall only be cleaned and painted as required by the Special Provision for "Cleaning and Painting Contract Surface Areas of Existing Steel Structures."

All new Structural Steel and bearing assemblies shall be hot-dip galvanized. See Special Provision for "Hot Dip Galvanizing for Structural Steel".

The existing structural steel coating contains lead. The Contractor shall take appropriate precautions to address the presence of lead on this project.

Cleaning and painting of the existing structural steel shall be as specified in the special provision for "Cleaning and Painting Existing Steel Structures". Areas to be cleaned and painted shall include all beam ends, end diaphragms, and steel components of bearings at both abutments. Beam end painting (8 ends) shall extend 10 feet from the end of the beams longitudinally. Galvanized bearings and structural steel encountered at the abutments shall be protected from normal blast cleaning operations and shall have surfaces prepared per the applicable sections of the special provision for "Cleaning and Painting Existing Steel Structures". All other areas shall be cleaned per Near White Blast Cleaning SSPC-SP10. All areas to be painted shall be painted according to the requirements of Organic Zinc-Rich Primer/Epoxy Intermediate Coat/Urethane Topcoat (OZ/E/U). The color of the final finish coat for the exterior and bottom flange of the fascia beams shall be Interstate Green, Munsell No. 7.5G 4/8. All other surfaces shall be gray, Munsell 5B 7/1. SSPC QP1 (and SSPC QP2) Certification is required for this contract.

GENERAL NOTES (CONT.)

Existing reinforcement bars extending into the removal areas shall be cleaned, straightened and incorporated into the new construction. Any reinforcement bars that are damaged during concrete removal shall be replaced with an approved bar splicer or anchorage system. Cost included with Concrete Removal.

The concrete for bridge decks finished according to Article 503.16(a) of the Standard Specifications shall be placed and compacted parallel to the skew in uniform increments along centerline of bridge. The machine used for finishing shall be set parallel to the skew for striking off and screeding the concrete.

Salvage aluminum rail and deliver to bridge crew yard in Springfield.

SCOPE OF WORK

1. Setup traffic control and close roadway.
2. Remove concrete and steel railings, deck, and upper portion of wingwalls.
3. Remove existing rocker expansion bearings, at the abutments, replace with elastomeric bearings.
4. Perform concrete repairs on substructure units.
5. Blast and paint beam ends.
6. Repair damaged slope walls and fill voids under slope walls.
7. Replace damaged shear connectors, as needed, replace steel end diaphragms.
8. Construct new 8¼" concrete deck, parapets, and approach slabs. Complete diamond grinding and deck grooving.

STA. 16+93.48
BUILT 202X BY
STATE OF ILLINOIS
FAI Rte. 155, Sec. (54-4HB)D
LOADING HS20-44
STR. NO. 054-0051

NAME PLATE

See Std. 515001

INDEX OF SHEETS

TOTAL BILL OF MATERIAL

ITEM	UNIT	SUPER	SUB	TOTAL
Concrete Removal	Cu. Yd.	-	26.5	26.5
Removal of Existing Concrete Deck No. 2	Each	1	-	1
Protective Shield	Sq. Yd.	228	-	228
Structure Excavation	Cu. Yd.	-	33	33
Concrete Structures	Cu. Yd.	-	31.0	31.0
Concrete Superstructure	Cu. Yd.	254.0	-	254.0
Protective Coat	Sq. Yd.	1,136	-	1,136
Concrete Superstructure (Approach Slab)	Cu. Yd.	81.8	-	81.8
Furnishing and Erecting Structural Steel	Pound	330	-	330
Stud Shear Connectors	Each	1,200	-	1,200
Cleaning and Painting Structural Steel, Location 2	L. Sum	1	-	1
Reinforcement Bars, Epoxy Coated	Pound	111,160	3,040	114,200
Name Plates	Each	1	-	1
Preformed Joint Strip Seal	Foot	62.0	-	62.0
Elastomeric Bearing Assembly, Type I	Each	8	-	8
Anchor Bolts, 1 1/4"	Each	16	-	16
Granular Backfill for Structures	Cu. Yd.	-	34	34
Concrete Sealer	Sq. Ft.	-	371	371
Bar Terminators	Each	36	87	123
Bridge Deck Grooving (Longitudinal)	Sq. Yd.	548	-	548
Jack and Remove Existing Bearings	Each	8	-	8
Structural Steel Repair	Pound	2,780	-	2,780
Approach Slab Removal	Sq. Yd.	116	-	116
Containment and Disposal of Lead Paint Cleaning Residues No. 2	L. Sum	1	-	1
Structural Repair of Concrete (Depth equal to or less than 5")	Sq. Ft.	-	2	2
Diamond Grinding (Bridge Section)	Sq. Yd.	891	-	891

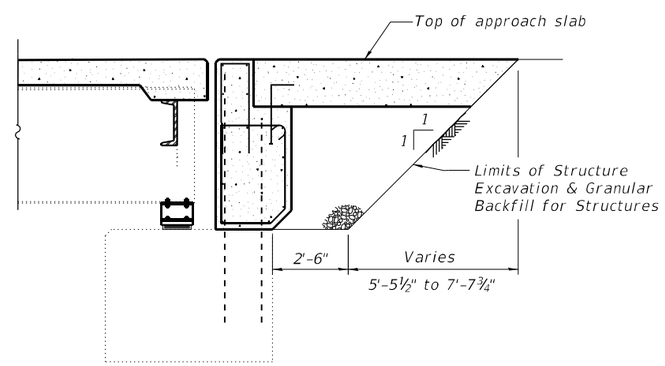

SECTION THRU ABUTMENT

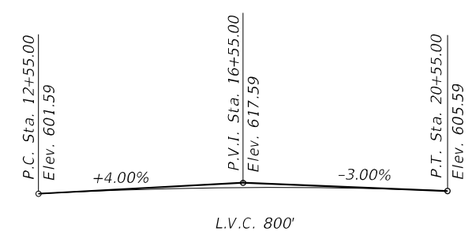

PROFILE GRADE

(Along Left Edge of Ramp "D")

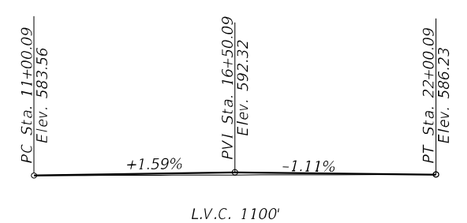

PROFILE GRADE

(Along ℄ Ramp "B")

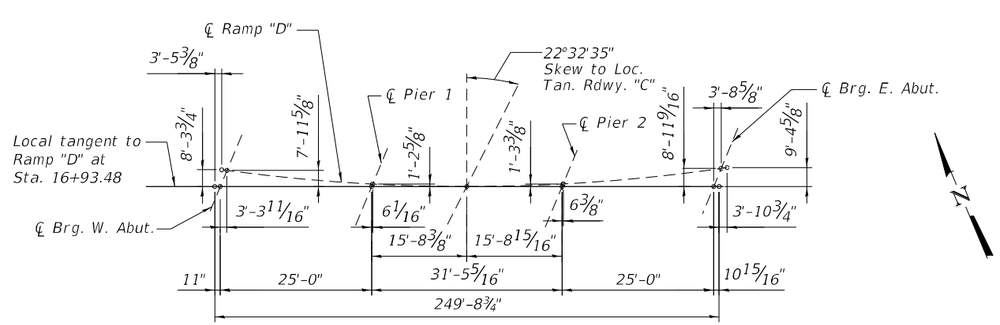

OFFSET SKETCH

MODEL: Default
FILE NAME: P:\Transportation\4854 - IDOT PTB 198-023 D6\WOs\CADD\51\054-0051-72220-002-Gen_Data.dgn

CDI
CIVIL DESIGN, INC.
WBE / DBE
EFFINGHAM, IL
LICENSE #184.003222

USER NAME = $USER$	DESIGNED -	REVISED -	
	DRAWN -	REVISED -	
PLOT SCALE = $SCALE$	CHECKED -	REVISED -	
PLOT DATE = 12/19/2024	DATE -	REVISED -	

STATE OF ILLINOIS
DEPARTMENT OF TRANSPORTATION

GENERAL DATA
STRUCTURE NO. 054-0051

SCALE: | SHEET 2 OF 36 SHEETS | STA. | TO STA.

F.A.I. RTE.	SECTION	COUNTY	TOTAL SHEETS	SHEET NO.
155	(54-4HB)D	LOGAN	133	99
		CONTRACT NO. 72220		
	ILLINOIS	FED. AID PROJECT		

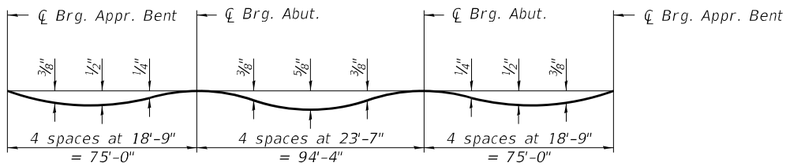

DEAD LOAD DEFLECTION DIAGRAM

(Includes weight of concrete only.)

Note:
The above deflections are not to be used in the field if the engineer is working from the grade elevations adjusted for dead load deflections and grinding as shown below.

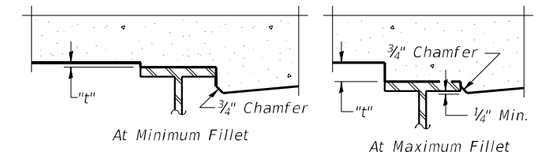

To determine "t": After all structural steel has been erected, elevations of the top flanges of the beams shall be taken at intervals shown below. These elevations subtracted from the "Theoretical Grade Elevations Adjusted for Dead Load Deflection and Grinding" shown below, minus the initial slab thickness prior to grinding, equals the fillet heights "t" above top flange of beams.

The slab is to be ground after curing to achieve smoothness, but the slab is not to be ground to elevations below the "Theoretical Grade Elevations" shown below. For grinding the deck, see Special Provisions.

FILLET HEIGHTS

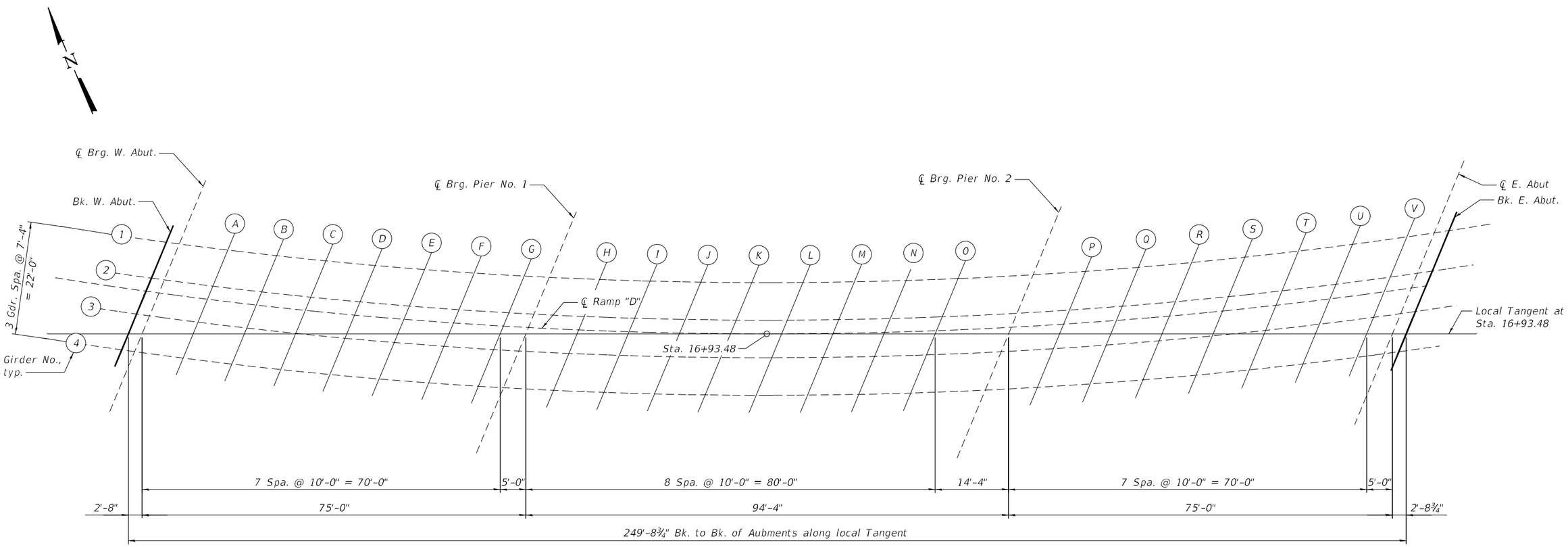

PLAN

MODEL: Default
FILE NAME: P:\Transportation\4854 - IDOT PTB 198-093 D6.6\WO4\CAD\D-51\054-0051-72220-003-Top_Slab_Elev01.dgn

CDI CIVIL DESIGN, INC. WBE / DBE EFFINGHAM, IL LICENSE #184.003222	USER NAME = $USER$	DESIGNED -	REVISED -	STATE OF ILLINOIS DEPARTMENT OF TRANSPORTATION	TOP OF SLAB ELEVATIONS STRUCTURE NO. 054-0051	F.A.I. RTE.	SECTION	COUNTY	TOTAL SHEETS / SHEET NO.
		DRAWN -	REVISED -			155	(54-4HB)D	LOGAN	133 / 100
	PLOT SCALE = $SCALE$	CHECKED -	REVISED -					CONTRACT NO. 72220	
	PLOT DATE = 12/19/2024	DATE -	REVISED -		SCALE: SHEET 3 OF 36 SHEETS STA. TO STA.		ILLINOIS	FED. AID PROJECT	

GIRDER 1

Location	Station	Offset	Theoretical Grade Elevations	Theoretical Grade Elevations Adjusted For Dead Load Deflection and Grinding
Bk. W. Abut.	15+74.46	-10.00	609.12	609.14
℄ Brg. W. Abut.	15+77.03	-10.00	609.15	609.18
A	15+86.72	-10.00	609.26	609.31
B	15+96.43	-10.00	609.37	609.42
C	16+06.18	-10.00	609.46	609.53
D	16+15.96	-10.00	609.55	609.61
E	16+25.77	-10.00	609.63	609.68
F	16+35.62	-10.00	609.70	609.73
G	16+45.51	-10.00	609.76	609.78
℄ Brg. Pier No. 1	16+50.46	-10.00	609.79	609.81
H	16+60.41	-10.00	609.84	609.86
I	16+70.40	-10.00	609.88	609.92
J	16+80.43	-10.00	609.91	609.96
K	16+90.51	-10.00	609.93	610.00
L	17+00.63	-10.00	609.95	610.02
M	17+10.80	-10.00	609.95	610.02
N	17+21.03	-10.00	609.95	610.00
O	17+31.31	-10.00	609.94	609.97
℄ Brg. Pier No. 2	17+46.14	-10.00	609.90	609.92
P	17+56.57	-10.00	609.87	609.89
Q	17+67.05	-10.00	609.82	609.87
R	17+77.60	-10.00	609.77	609.83
S	17+88.21	-10.00	609.70	609.78
T	17+98.90	-10.00	609.62	609.70
U	18+09.66	-10.00	609.54	609.60
V	18+20.49	-10.00	609.44	609.47
℄ Brg. E. Abut.	18+25.94	-10.00	609.39	609.41
Bk. E. Abut.	18+28.92	-10.00	609.36	609.38

GIRDER 2

Location	Station	Offset	Theoretical Grade Elevations	Theoretical Grade Elevations Adjusted For Dead Load Deflection and Grinding
Bk. W. Abut.	15+72.51	-2.67	609.67	609.69
℄ Brg. W. Abut.	15+75.07	-2.67	609.70	609.72
A	15+84.66	-2.67	609.81	609.86
B	15+94.29	-2.67	609.92	609.97
C	16+03.95	-2.67	610.01	610.08
D	16+13.64	-2.67	610.10	610.16
E	16+23.36	-2.67	610.18	610.23
F	16+33.12	-2.67	610.25	610.29
G	16+42.91	-2.67	610.32	610.34
℄ Brg. Pier No. 1	16+47.82	-2.67	610.34	610.37
H	16+57.68	-2.67	610.40	610.42
I	16+67.57	-2.67	610.44	610.48
J	16+77.50	-2.67	610.47	610.53
K	16+87.48	-2.67	610.50	610.57
L	16+97.51	-2.67	610.52	610.59
M	17+07.58	-2.67	610.52	610.59
N	17+17.71	-2.67	610.52	610.58
O	17+27.88	-2.67	610.51	610.55
℄ Brg. Pier No. 2	17+42.57	-2.67	610.48	610.51
P	17+52.88	-2.67	610.45	610.48
Q	17+63.25	-2.67	610.41	610.46
R	17+73.69	-2.67	610.36	610.42
S	17+84.19	-2.67	610.30	610.37
T	17+94.76	-2.67	610.23	610.30
U	18+05.40	-2.67	610.14	610.20
V	18+16.12	-2.67	610.05	610.09
℄ Brg. E. Abut.	18+21.50	-2.67	610.00	610.02
Bk. E. Abut.	18+24.45	-2.67	609.97	609.99

℄ RAMP D & P.G.L.

Location	Station	Offset	Theoretical Grade Elevations	Theoretical Grade Elevations Adjusted For Dead Load Deflection and Grinding
Bk. W. Abut.	15+71.81	0.00	609.87	609.89
℄ Brg. W. Abut.	15+74.36	0.00	609.90	609.92
A	15+83.93	0.00	610.01	610.06
B	15+93.52	0.00	610.12	610.17
C	16+03.15	0.00	610.21	610.28
D	16+12.81	0.00	610.30	610.36
E	16+22.50	0.00	610.38	610.43
F	16+32.22	0.00	610.45	610.49
G	16+41.98	0.00	610.52	610.54
℄ Brg. Pier No. 1	16+46.88	0.00	610.55	610.57
H	16+56.69	0.00	610.60	610.62
I	16+66.55	0.00	610.64	610.68
J	16+76.45	0.00	610.68	610.73
K	16+86.40	0.00	610.70	610.77
L	16+96.39	0.00	610.72	610.79
M	17+06.43	0.00	610.73	610.80
N	17+16.51	0.00	610.73	610.78
O	17+26.65	0.00	610.72	610.76
℄ Brg. Pier No. 2	17+41.28	0.00	610.70	610.72
P	17+51.56	0.00	610.66	610.69
Q	17+61.89	0.00	610.62	610.67
R	17+72.29	0.00	610.57	610.64
S	17+82.75	0.00	610.51	610.59
T	17+93.28	0.00	610.44	610.52
U	18+03.87	0.00	610.36	610.43
V	18+14.55	0.00	610.27	610.31
℄ Brg. E. Abut.	18+19.91	0.00	610.22	610.25
Bk. E. Abut.	18+22.85	0.00	610.20	610.22

GIRDER 3

Location	Station	Offset	Theoretical Grade Elevations	Theoretical Grade Elevations Adjusted For Dead Load Deflection and Grinding
Bk. W. Abut.	15+70.60	4.67	610.22	610.24
℄ Brg. W. Abut.	15+73.13	4.67	610.25	610.27
A	15+82.65	4.67	610.36	610.41
B	15+92.19	4.67	610.47	610.52
C	16+01.76	4.67	610.56	610.63
D	16+11.36	4.67	610.65	610.71
E	16+20.99	4.67	610.73	610.78
F	16+30.66	4.67	610.81	610.84
G	16+40.37	4.67	610.87	610.90
℄ Brg. Pier No. 1	16+45.23	4.67	610.90	610.92
H	16+54.99	4.67	610.95	610.98
I	16+64.79	4.67	611.00	611.04
J	16+74.63	4.67	611.04	611.09
K	16+84.52	4.67	611.06	611.13
L	16+94.44	4.67	611.08	611.15
M	17+04.42	4.67	611.09	611.16
N	17+14.44	4.67	611.10	611.15
O	17+24.52	4.67	611.09	611.13
℄ Brg. Pier No. 2	17+39.05	4.67	611.07	611.09
P	17+49.26	4.67	611.04	611.06
Q	17+59.53	4.67	611.00	611.04
R	17+69.85	4.67	610.95	611.01
S	17+80.24	4.67	610.89	610.97
T	17+90.70	4.67	610.83	610.90
U	18+01.23	4.67	610.75	610.81
V	18+11.82	4.67	610.66	610.70
℄ Brg. E. Abut.	18+17.15	4.67	610.61	610.64
Bk. E. Abut.	18+20.06	4.67	610.59	610.61

GIRDER 4

Location	Station	Offset	Theoretical Grade Elevations	Theoretical Grade Elevations Adjusted For Dead Load Deflection and Grinding
Bk. W. Abut.	15+68.72	12.00	610.77	610.79
℄ Brg. W. Abut.	15+71.23	12.00	610.80	610.82
A	15+80.66	12.00	610.91	610.95
B	15+90.12	12.00	611.02	611.07
C	15+99.60	12.00	611.11	611.18
D	16+09.12	12.00	611.20	611.27
E	16+18.67	12.00	611.29	611.34
F	16+28.25	12.00	611.36	611.40
G	16+37.86	12.00	611.43	611.45
℄ Brg. Pier No. 1	16+42.68	12.00	611.46	611.48
H	16+52.35	12.00	611.51	611.54
I	16+62.06	12.00	611.56	611.60
J	16+71.81	12.00	611.60	611.65
K	16+81.60	12.00	611.63	611.69
L	16+91.43	12.00	611.65	611.72
M	17+01.31	12.00	611.66	611.73
N	17+11.24	12.00	611.67	611.72
O	17+21.22	12.00	611.67	611.70
℄ Brg. Pier No. 2	17+35.60	12.00	611.64	611.67
P	17+45.71	12.00	611.62	611.65
Q	17+55.87	12.00	611.59	611.63
R	17+66.09	12.00	611.54	611.60
S	17+76.37	12.00	611.49	611.56
T	17+86.72	12.00	611.43	611.50
U	17+97.13	12.00	611.35	611.41
V	18+07.61	12.00	611.27	611.31
℄ Brg. E. Abut.	18+12.88	12.00	611.22	611.25
Bk. E. Abut.	18+15.76	12.00	611.20	611.22

NORTH EDGE OF SHOULDER

Location	Station	Offset	Theoretical Grade Elevations	Theoretical Grade Elevations Adjusted For Grinding
W. End W. Appr. Slab	15+45.08	-12.00	608.58	608.60
A1	15+55.19	-12.00	608.72	608.74
A2	15+65.34	-12.00	608.85	608.87
E. End W. Appr. Slab	15+75.52	-12.00	608.98	609.00

NORTH EDGE OF PAVEMENT

Location	Station	Offset	Theoretical Grade Elevations	Theoretical Grade Elevations Adjusted For Grinding
W. End W. Appr. Slab	15+44.15	-8.00	608.87	608.90
A1	15+54.22	-8.00	609.02	609.04
A2	15+64.32	-8.00	609.15	609.17
E. End W. Appr. Slab	15+74.44	-8.00	609.28	609.30

℄ RAMP D & P.G.L.

Location	Station	Offset	Theoretical Grade Elevations	Theoretical Grade Elevations Adjusted For Grinding
W. End W. Appr. Slab	15+42.33	0.00	609.47	609.49
A1	15+52.30	0.00	609.62	609.64
A2	15+62.30	0.00	609.75	609.77
E. End W. Appr. Slab	15+72.33	0.00	609.88	609.90

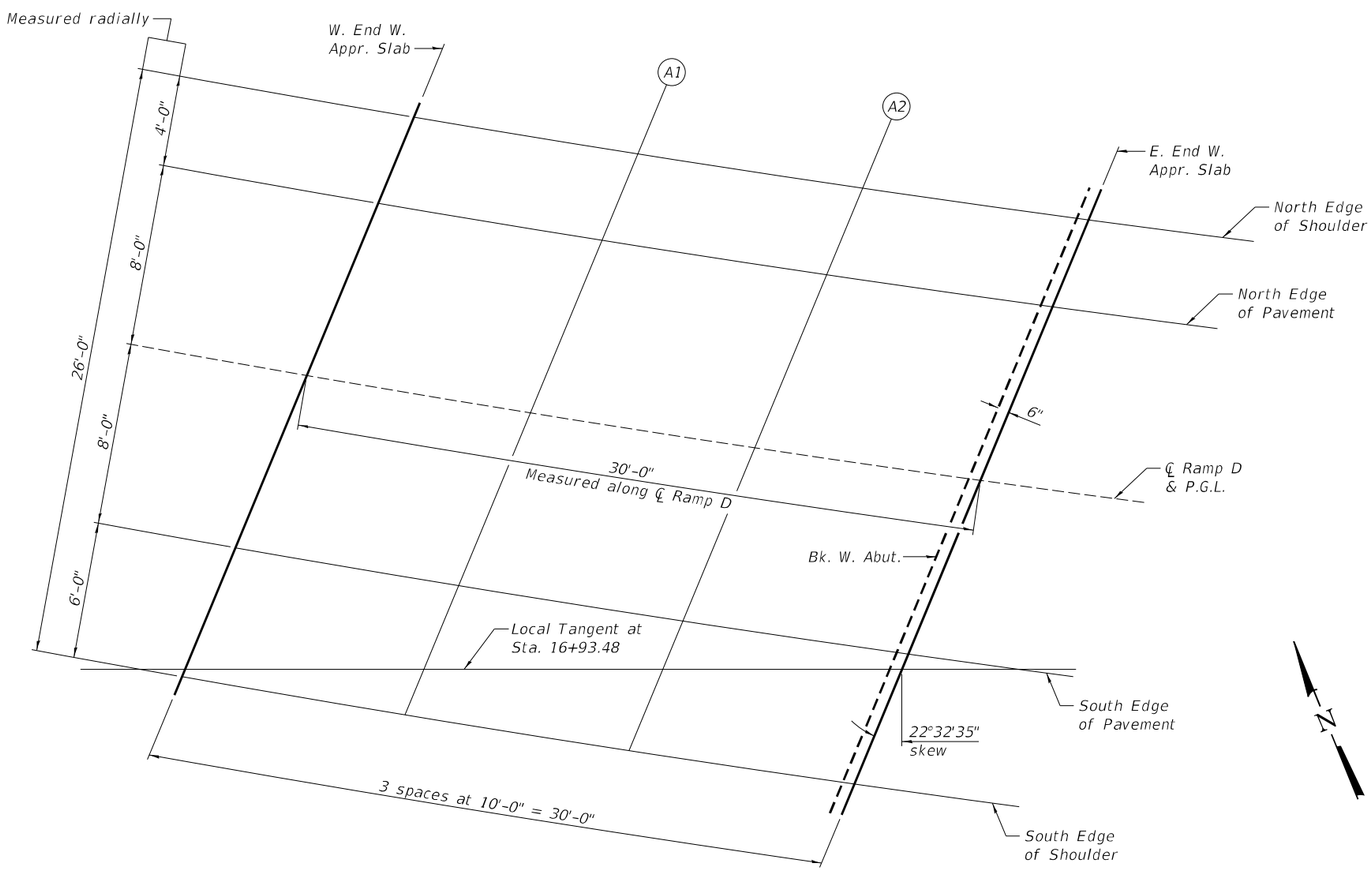

PLAN

SOUTH EDGE OF PAVEMENT

Location	Station	Offset	Theoretical Grade Elevations	Theoretical Grade Elevations Adjusted For Grinding
W. End W. Appr. Slab	15+40.54	8.00	610.07	610.09
A1	15+50.42	8.00	610.21	610.23
A2	15+60.32	8.00	610.35	610.37
E. End W. Appr. Slab	15+70.26	8.00	610.48	610.50

SOUTH EDGE OF SHOULDER

Location	Station	Offset	Theoretical Grade Elevations	Theoretical Grade Elevations Adjusted For Grinding
W. End W. Appr. Slab	15+39.22	14.00	610.52	610.54
A1	15+49.03	14.00	610.66	610.68
A2	15+58.86	14.00	610.80	610.82
E. End W. Appr. Slab	15+68.72	14.00	610.93	610.95

MODEL: Default
FILE NAME: P:\Transportation\4854 - IDOT PTB 198-023 D6(WO4)CAD\D-51\054-0051-72220-006-Top W-Appr Elev.dgn

CDI CIVIL DESIGN, INC. WBE / DBE EFFINGHAM, IL LICENSE #184.003222

USER NAME = $USER$	DESIGNED -	REVISED -	
	DRAWN -	REVISED -	
PLOT SCALE = $SCALE$	CHECKED -	REVISED -	
PLOT DATE = 12/19/2024	DATE -	REVISED -	

STATE OF ILLINOIS
DEPARTMENT OF TRANSPORTATION

TOP OF WEST APPROACH SLAB ELEVATIONS
STRUCTURE NO. 054-0051

SCALE: SHEET 6 OF 36 SHEETS STA. TO STA.

F.A.I. RTE.	SECTION	COUNTY	TOTAL SHEETS	SHEET NO.
155	(54-4HB)D	LOGAN	133	103
		CONTRACT NO. 72220		
	ILLINOIS	FED. AID PROJECT		

NORTH EDGE OF SHOULDER

Location	Station	Offset	Theoretical Grade Elevations	Theoretical Grade Elevations Adjusted For Grinding
W. End E. Appr. Slab	18+29.57	-12.00	609.19	609.21
A3	18+39.69	-12.00	609.09	609.11
A4	18+49.88	-12.00	608.97	608.99
E. End E. Appr. Slab	18+60.15	-12.00	608.84	608.86

NORTH EDGE OF PAVEMENT

Location	Station	Offset	Theoretical Grade Elevations	Theoretical Grade Elevations Adjusted For Grinding
W. End E. Appr. Slab	18+27.11	-8.00	609.53	609.55
A3	18+37.16	-8.00	609.43	609.45
A4	18+47.29	-8.00	609.31	609.33
E. End E. Appr. Slab	18+57.49	-8.00	609.18	609.21

℄ RAMP D & P.G.L.

Location	Station	Offset	Theoretical Grade Elevations	Theoretical Grade Elevations Adjusted For Grinding
W. End E. Appr. Slab	18+22.26	0.00	610.20	610.22
A3	18+32.19	0.00	610.10	610.12
A4	18+42.19	0.00	609.99	610.01
E. End E. Appr. Slab	18+52.26	0.00	609.87	609.89

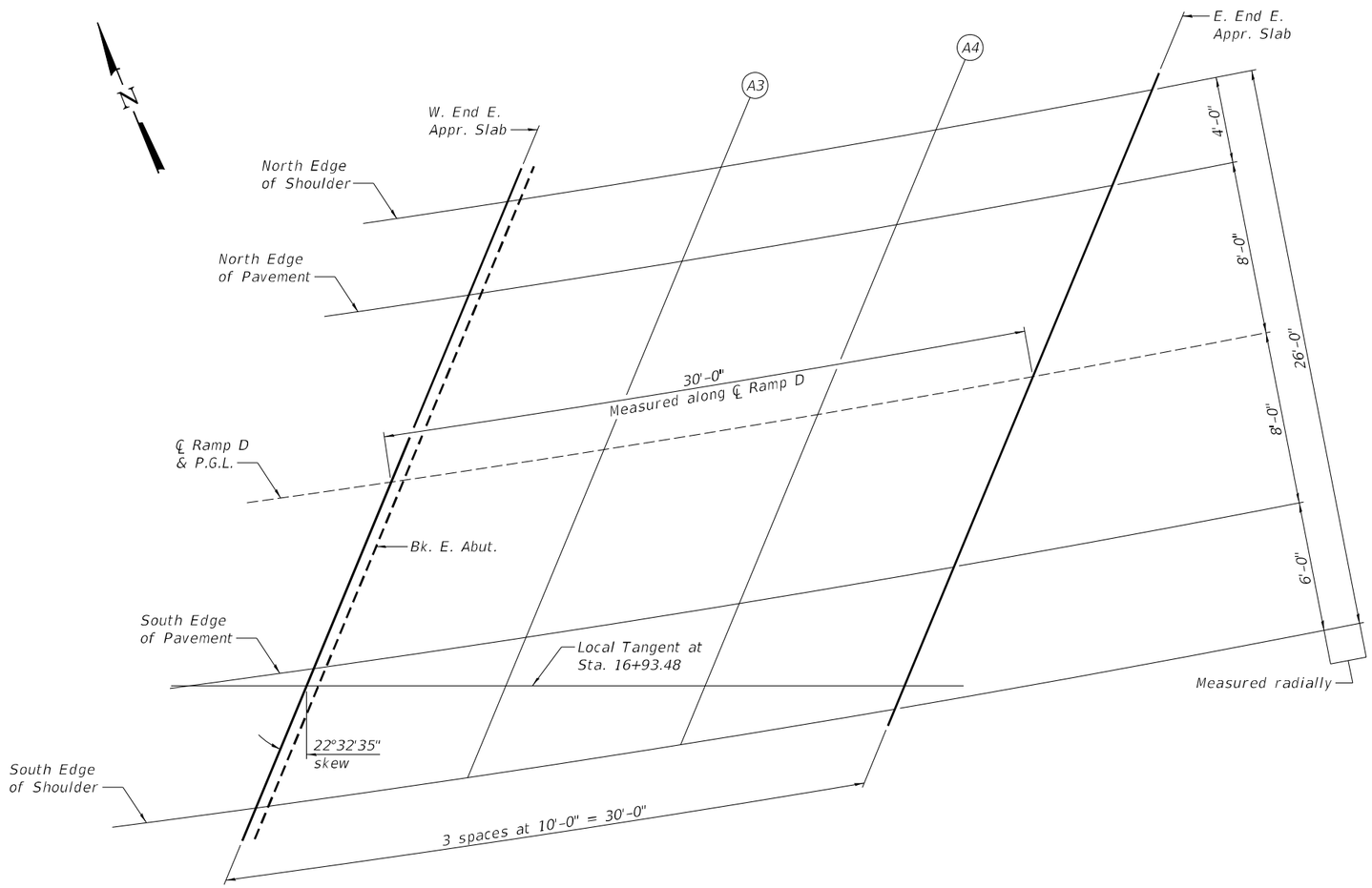

PLAN

SOUTH EDGE OF PAVEMENT

Location	Station	Offset	Theoretical Grade Elevations	Theoretical Grade Elevations Adjusted For Grinding
W. End E. Appr. Slab	18+17.52	8.00	610.87	610.89
A3	18+27.33	8.00	610.78	610.80
A4	18+37.21	8.00	610.67	610.69
E. End E. Appr. Slab	18+47.15	8.00	610.56	610.58

SOUTH EDGE OF SHOULDER

Location	Station	Offset	Theoretical Grade Elevations	Theoretical Grade Elevations Adjusted For Grinding
W. End E. Appr. Slab	18+14.03	14.00	611.37	611.39
A3	18+23.75	14.00	611.28	611.30
A4	18+33.54	14.00	611.18	611.20
E. End E. Appr. Slab	18+43.39	14.00	611.07	611.09

MODEL: Default
FILE NAME: P:\Transportation\4854 - IDOT PTB 198-033 D6\DWG\4\CADD S\1054-0051-72220-G07-Top E-Appr Elev.dgn

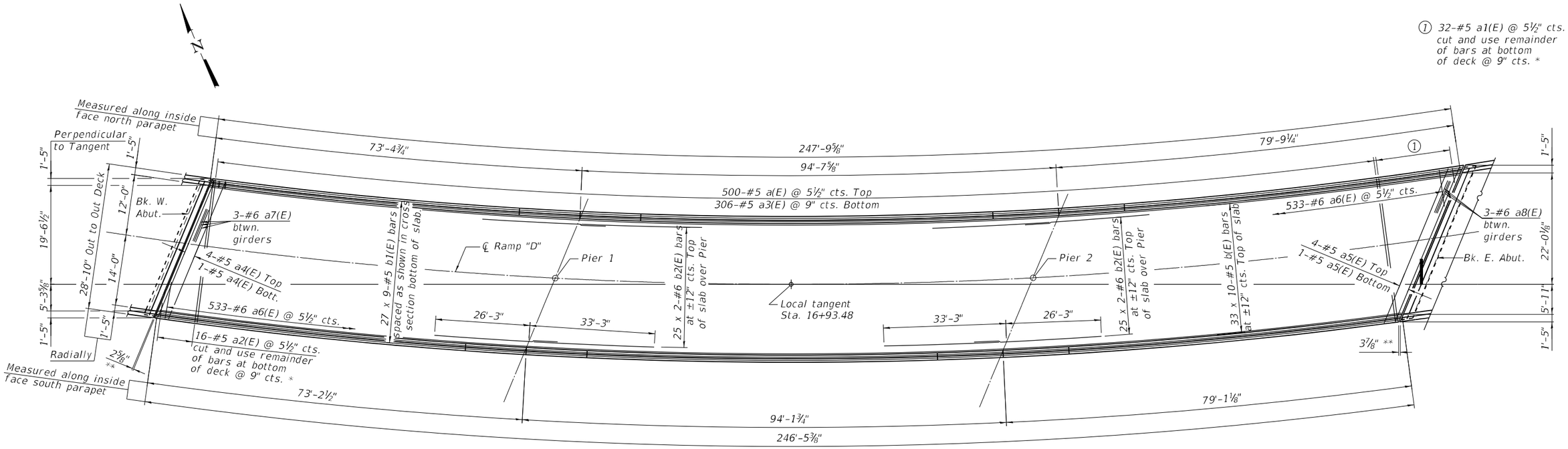

MINIMUM BAR LAP

#5 bar = 3'-6"
#6 bar = 3'-7"

PLAN

* See Field Cutting Diagram.
** Dimension showing concrete opening. For joint opening see sheet 14 of 36.

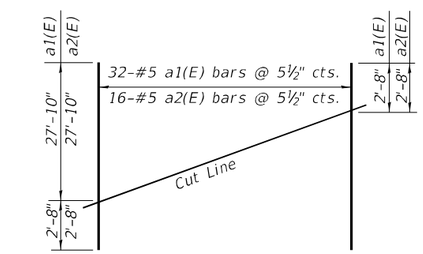

FIELD CUTTING DIAGRAM FOR SLAB

Order a1(E) and a2(E) full length and cut as shown. Use remainder of bars on the bottom of deck. Discard extra bars.

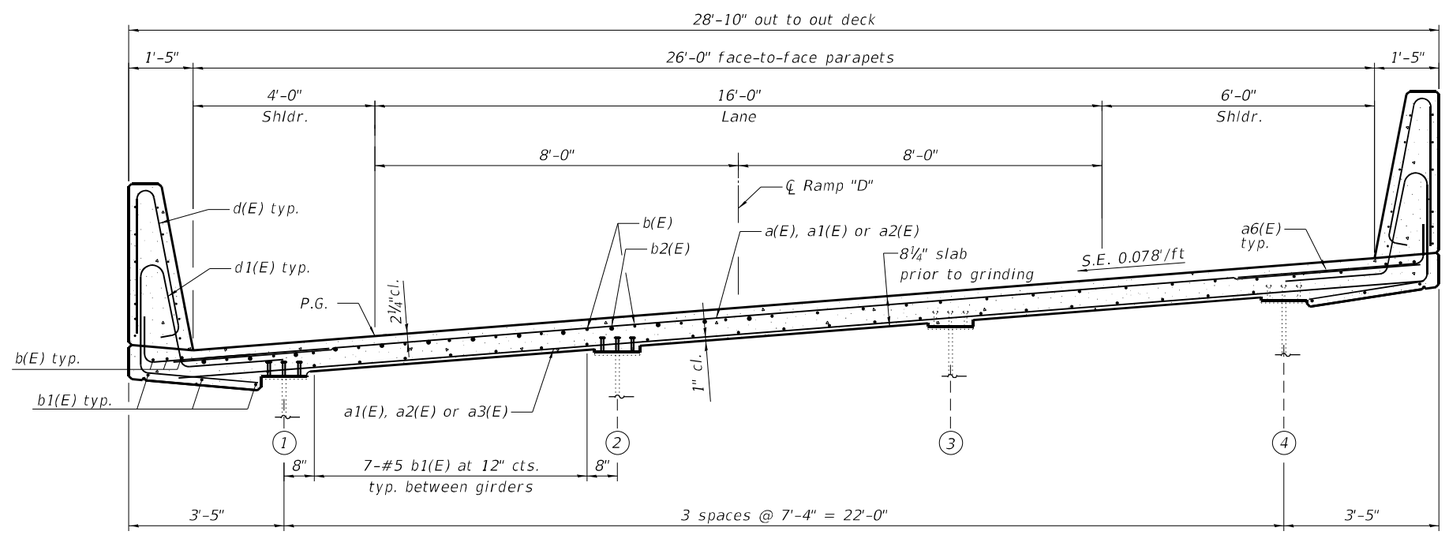

NEAR PIER

CROSS SECTION

(Looking East)

NEAR MIDSPAN

Notes:
See sheet 9 of 36 for superstructure details and Bill of Material.
Bars indicated thus 20 x 3-#5 etc. indicates 20 lines of bars with 3 lengths per line.

MODEL: Default
FILE NAME: P:\Transportation\4854 - IDOT PTB 198-023 D6.6\WO&CA\D-51\054-0051-72220-008-Superstructure 01.dgn

CDI CIVIL DESIGN, INC. WBE / DBE EFFINGHAM, IL LICENSE #184.003222	USER NAME = $USER$	DESIGNED -	REVISED -	STATE OF ILLINOIS DEPARTMENT OF TRANSPORTATION	SUPERSTRUCTURE STRUCTURE NO. 054-0051
		DRAWN -	REVISED -		
	PLOT SCALE = $SCALE$	CHECKED -	REVISED -		
	PLOT DATE = 12/19/2024	DATE -	REVISED -		SCALE: SHEET 8 OF 36 SHEETS STA. TO STA.

F.A.I. RTE.	SECTION	COUNTY	TOTAL SHEETS	SHEET NO.
155	(54-4HB)D	LOGAN	133	105
		CONTRACT NO. 72220		
		ILLINOIS	FED. AID PROJECT	

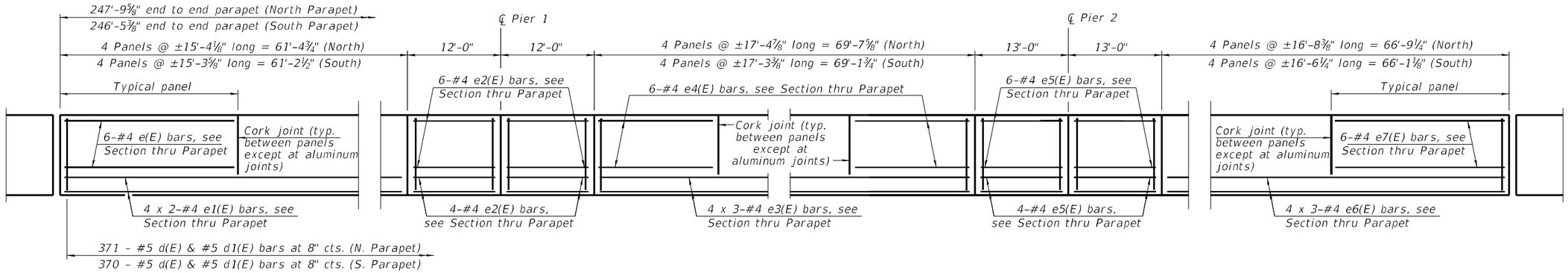

INSIDE ELEVATION OF PARAPET

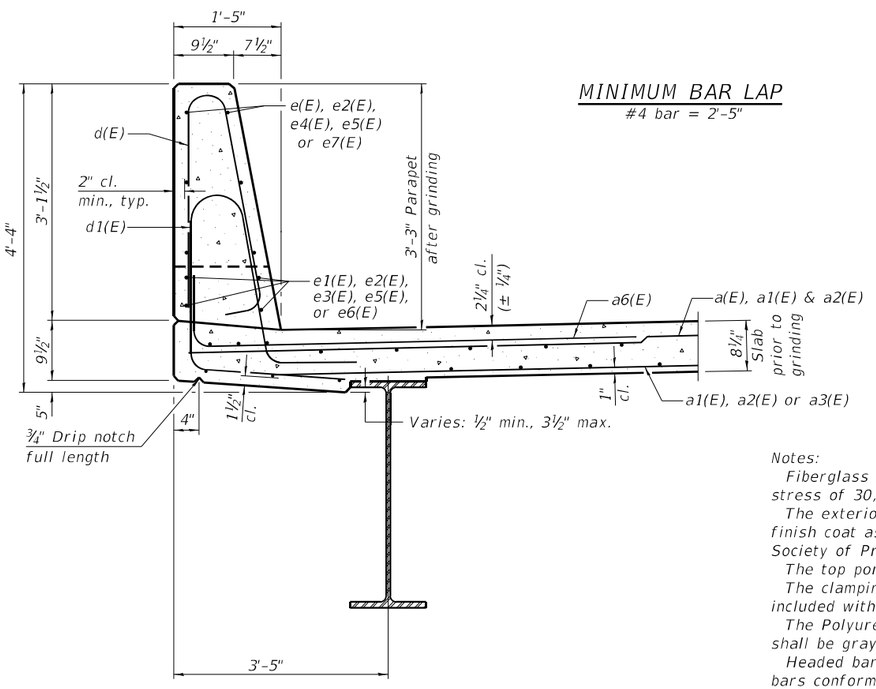

SECTION THRU PARAPET

MINIMUM BAR LAP

#4 bar = 2'-5"

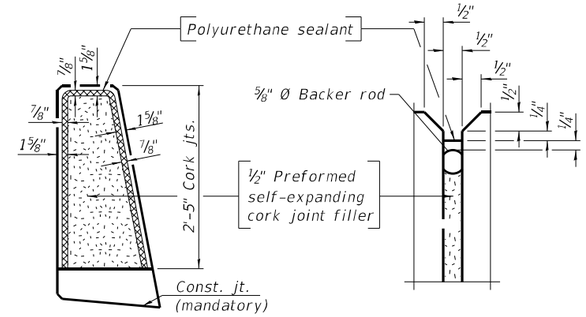

PARAPET JOINT DETAILS

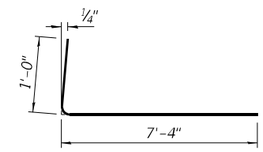

BAR a6(E)

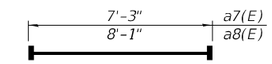

BAR a7(E) & a8(E)

(Headed)

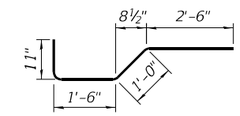

BAR x(E)

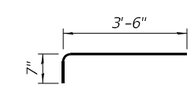

BAR x1(E)

Notes:

Fiberglass pipe shall conform to ASTM D2996, with short-time rupture strength hoop tensile stress of 30,000 p.s.i. minimum.

The exterior surfaces of the floor drains shall be painted according to Article 506 with the finish coat as specified. The exterior surfaces of the drains shall be cleaned according to the Society of Protective Coating's Spec. SSPC-SP1 prior to painting.

The top portion of aluminum floor drains shall be coated to minimize reaction with wet concrete.

The clamping device shall be galvanized according to AASHTO M 232. Cost of clamping device included with Floor Drains.

The Polyurethane Sealant shall be according to Article 1050.04 of the Std. Spec. and the color shall be gray.

Headed bars shall conform to ASTM A970 with threaded attachment; Class HA; and reinforcement bars conforming to ASTM A706. Cost included with Reinforcement Bars, Epoxy Coated.

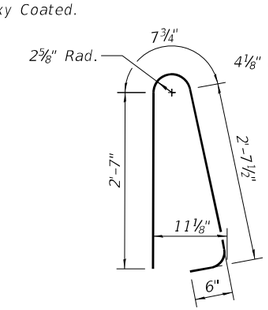

BAR d(E)

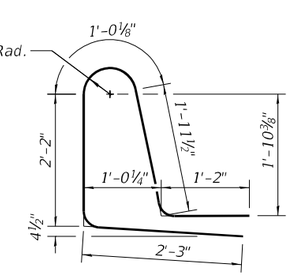

BAR d1(E)

SUPERSTRUCTURE BILL OF MATERIAL

Bar	No.	Size	Length	Shape
a(E)	500	#5	27'-10"	
a1(E)	32	#5	30'-6"	
a2(E)	16	#5	30'-6"	
a3(E)	306	#5	26'-6"	
a4(E)	5	#5	22'-5"	
a5(E)	5	#5	25'-3"	
a6(E)	1066	#6	8'-4"	
a7(E)	9	#6	7'-3"	
a8(E)	9	#6	8'-1"	
b(E)	330	#5	27'-11"	
b1(E)	243	#5	30'-8"	
b2(E)	100	#6	31'-7"	
d(E)	741	#5	6'-5"	
d1(E)	741	#5	8'-7"	
e(E)	48	#4	15'-0"	
e1(E)	16	#4	31'-10"	
e2(E)	40	#4	11'-8"	
e3(E)	24	#4	24'-9"	
e4(E)	48	#4	17'-0"	
e5(E)	40	#4	12'-8"	
e6(E)	24	#4	23'-9"	
e7(E)	48	#4	16'-4"	
x(E)	42	#5	5'-11"	
x1(E)	42	#5	4'-1"	
Reinforcement Bars, Epoxy Coated			Lbs.	75,780
Concrete Superstructure			Cu. Yds.	246.2

Bars indicated thus 1 x 2-#4 etc. indicates 1 line of bars with 2 lengths per line.

SDE-SB-1 1-1-2020

MODEL: Default
FILE NAME: P:\Transportation\4654 - IDOT PTB 198-023 06\W04\CADD 5\054-0051-72220-009-Superstructure 02.dgn

CDI CIVIL DESIGN, INC. WBE / DBE EFFINGHAM, IL LICENSE #184.003222

USER NAME = $USER$	DESIGNED -	REVISED -
	DRAWN -	REVISED -
PLOT SCALE = $SCALE$	CHECKED -	REVISED -
PLOT DATE = 12/19/2024	DATE -	REVISED -

STATE OF ILLINOIS
DEPARTMENT OF TRANSPORTATION

SUPERSTRUCTURE DETAILS
STRUCTURE NO. 054-0051

SCALE: SHEET 9 OF 36 SHEETS STA. TO STA.

F.A.I. RTE.	SECTION	COUNTY	TOTAL SHEETS	SHEET NO.
155	(54-4HB)D	LOGAN	133	106

CONTRACT NO. 72220

ILLINOIS FED. AID PROJECT

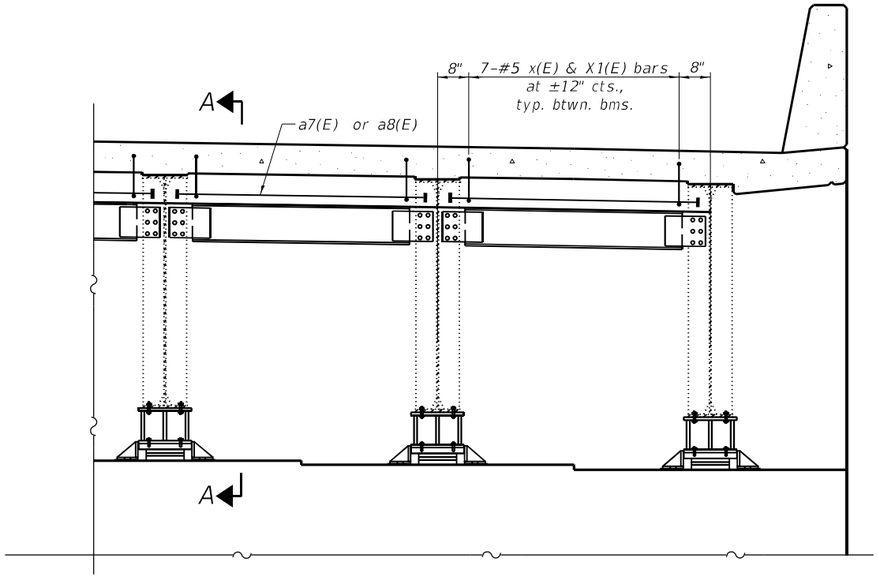

DIAPHRAGM AT WEST ABUTMENT

(Looking West)
(East Abutment Similar)

Notes:
See sheet 9 of 36 for superstructure details and Bill of Material.
The x(E) and x1(E) bars shall be placed parallel to the beams.
Spacing for these bars shall be at right angles to the beams.

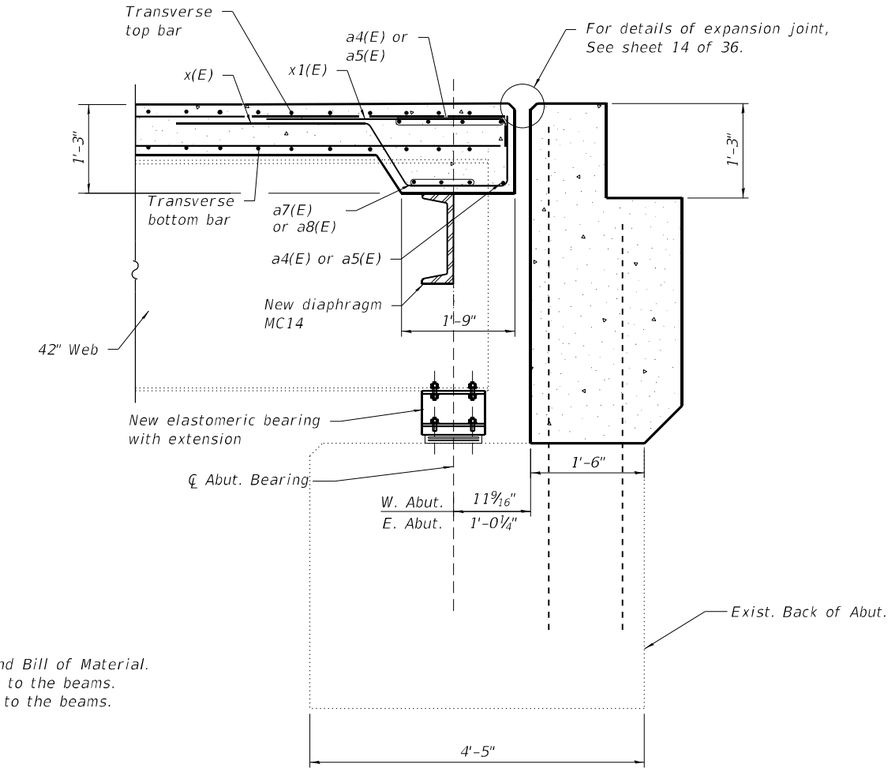

SECTION A-A

(Full cross frame not shown for clarity)

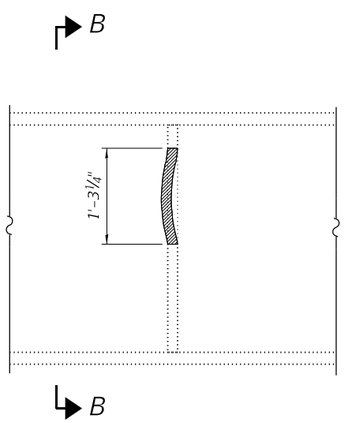

ELEVATION

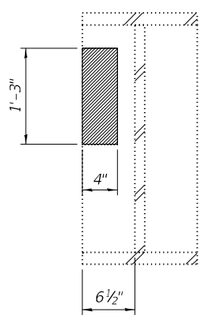

ELEVATION B-B

Partial bearing stiffener removal.

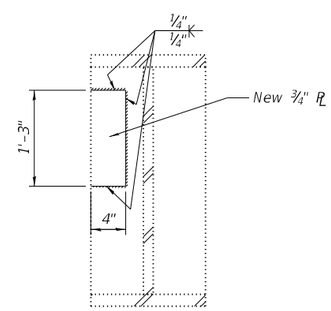

STIFFENER PLATE REPAIR

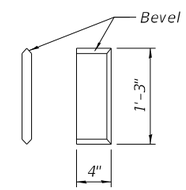

REPAIR PLATE DETAIL

BENT BEARING STIFFENER REPAIR DETAIL

(Total 1 required)

Cost of bent bearing stiffener repair is paid for as Structural Steel Repair.

BILL OF MATERIAL

ITEM	UNIT	TOTAL
Structural Steel Repair	Pound	10

MODEL: Default
FILE NAME: P:\Transportation\4854 - IDOT PTB 198-033 D6\DWG\ACDD-S\1054-0051-72220-010-Diaphragm Details.dgn

CIVIL DESIGN, INC.
WBE / DBE
EFFINGHAM, IL
LICENSE #184.003222

USER NAME = $USER$	DESIGNED -	REVISED -	
	DRAWN -	REVISED -	
PLOT SCALE = $SCALE$	CHECKED -	REVISED -	
PLOT DATE = 12/19/2024	DATE -	REVISED -	

STATE OF ILLINOIS
DEPARTMENT OF TRANSPORTATION

DIAPHRAGM DETAILS
STRUCTURE NO. 054-0051

SCALE: | SHEET 10 OF 36 SHEETS | STA. | TO STA.

F.A.I. RTE.	SECTION	COUNTY	TOTAL SHEETS	SHEET NO.
155	(54-4HB)D	LOGAN	133	107
		CONTRACT NO. 72220		
		ILLINOIS	FED. AID PROJECT	

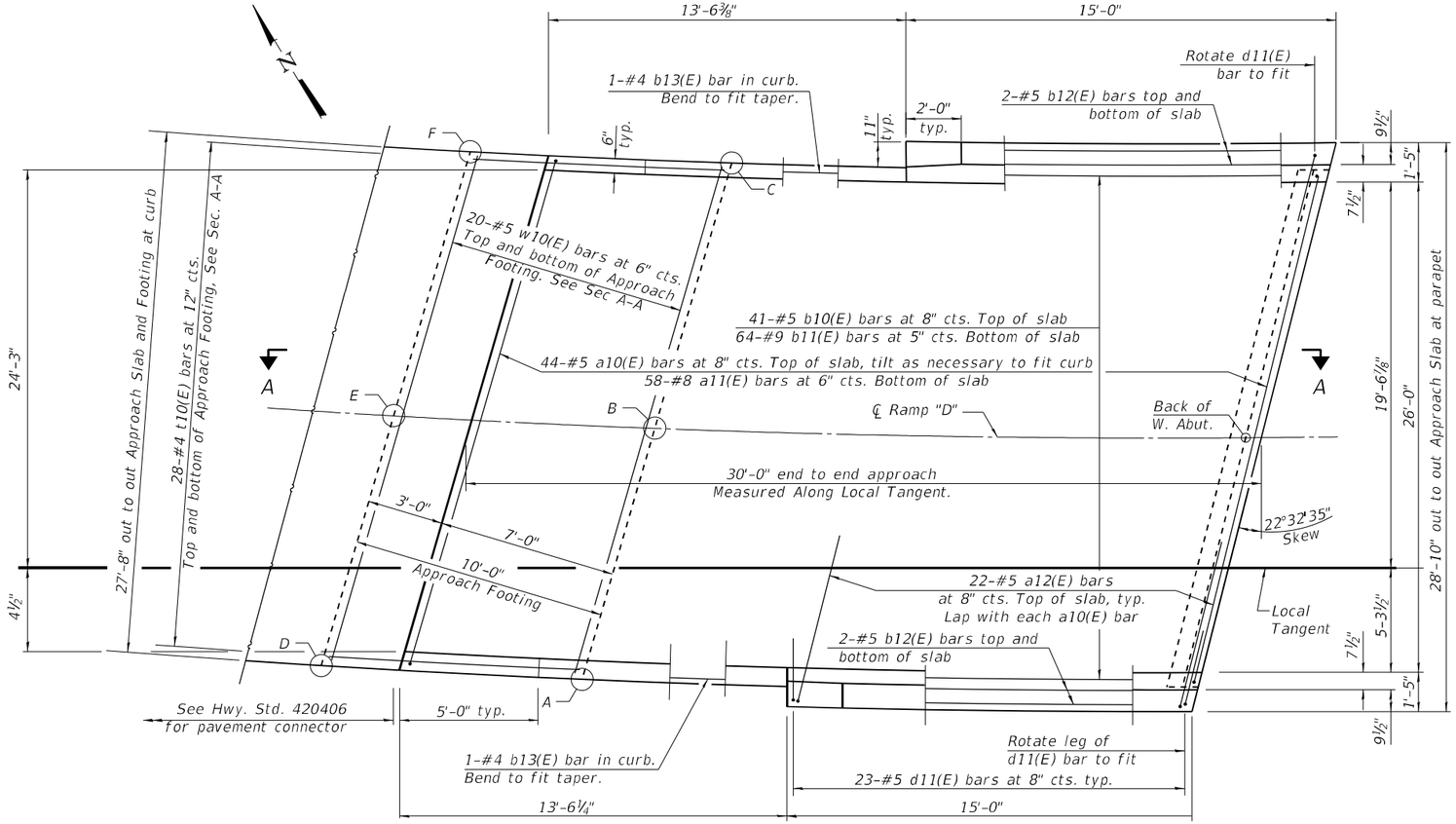

PLAN

(West approach slab)

TOP AND BOTTOM ELEVATIONS FOR APPROACH FOOTING

Point/ Location	Station	Offset	Top	Bottom
A	15+48.58	14.50	609.44	608.61
B	15+51.99	0.00	608.36	607.53
C	15+55.01	-12.50	607.43	606.59
D	15+38.49	14.50	609.29	608.46
E	15+41.72	0.00	608.21	607.38
F	15+44.59	-12.50	607.29	606.45

Note:
See sheet 13 of 36 for Section A-A.

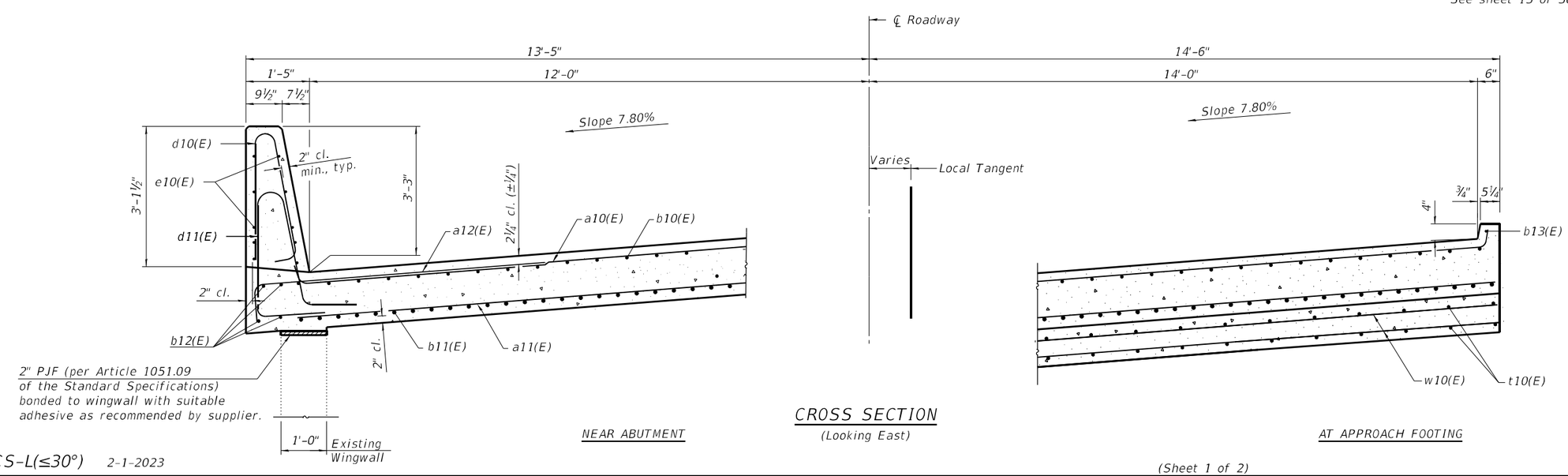

NEAR ABUTMENT

CROSS SECTION

(Looking East)

AT APPROACH FOOTING

BAIA-CIP-39CS-L(≤30°) 2-1-2023

(Sheet 1 of 2)

MODEL: Default
FILE NAME: P:\Transportation\4854 - IDOT PTB 198-023 D600WO4\CADD S\054-0051-72220-011-Approach Slab West.dgn

CIVIL DESIGN, INC.
WBE / DBE
EFFINGHAM, IL
LICENSE #184.003222

USER NAME = $USER$	DESIGNED -	REVISED -
	DRAWN -	REVISED -
PLOT SCALE = $SCALE$	CHECKED -	REVISED -
PLOT DATE = 12/19/2024	DATE -	REVISED -

STATE OF ILLINOIS
DEPARTMENT OF TRANSPORTATION

WEST BRIDGE APPROACH SLAB DETAILS
STRUCTURE NO. 054-0051

SCALE: | SHEET 11 OF 36 SHEETS | STA. | TO STA.

F.A.I. RTE.	SECTION	COUNTY	TOTAL SHEETS	SHEET NO.
155	(54-4HB)D	LOGAN	133	108
		CONTRACT NO. 72220		
	ILLINOIS	FED. AID PROJECT		

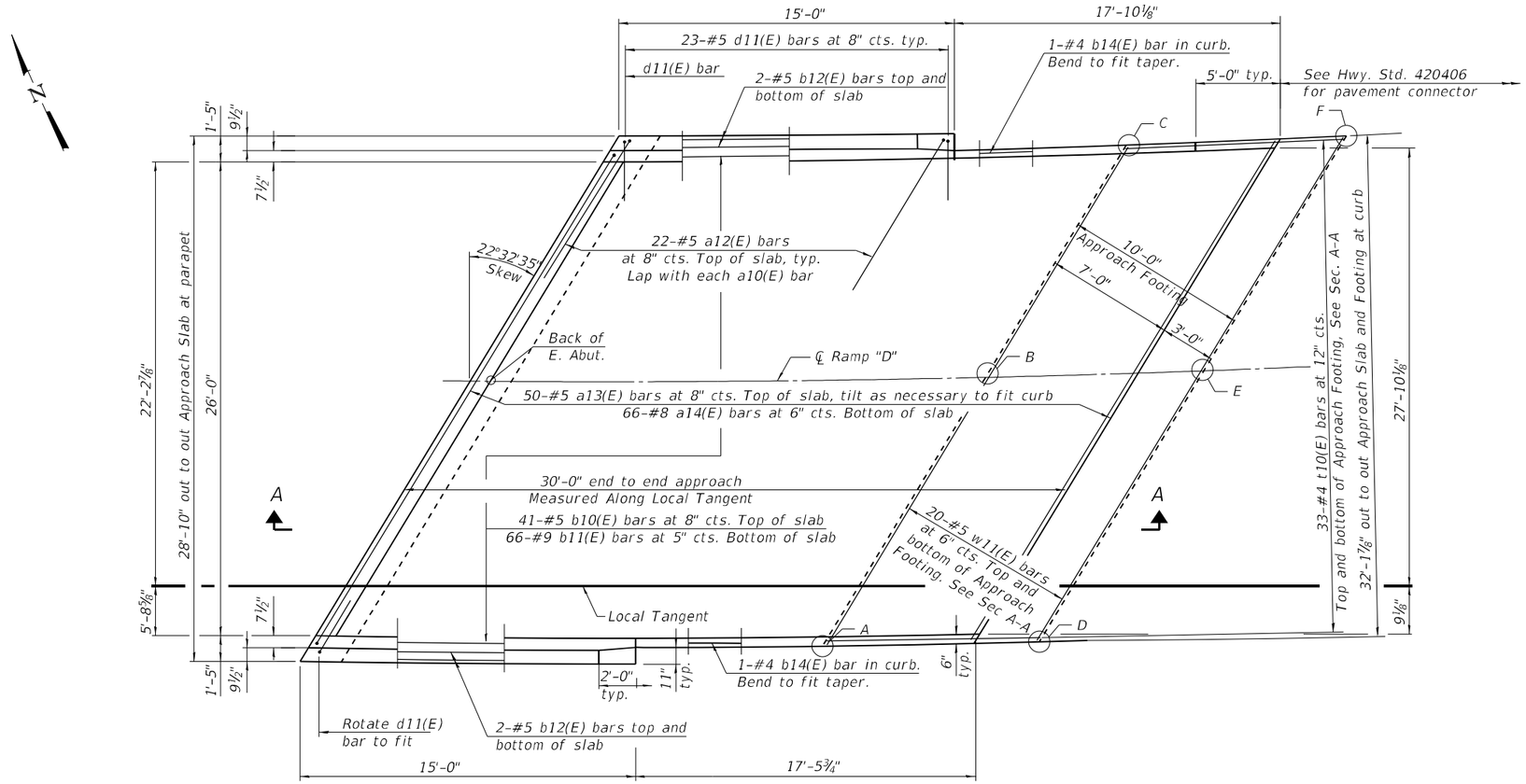

PLAN

(East approach slab)

TOP AND BOTTOM ELEVATIONS FOR APPROACH FOOTING

Point/ Location	Station	Offset	Top	Bottom
A	18+36.35	14.50	609.94	609.11
B	18+45.35	0.00	608.71	607.88
C	18+53.39	-12.50	607.64	606.80
D	18+47.97	14.50	609.81	608.98
E	18+57.23	0.00	608.56	607.73
F	18+65.52	-12.50	607.48	606.64

Note:
See sheet 13 of 36 for Section A-A.

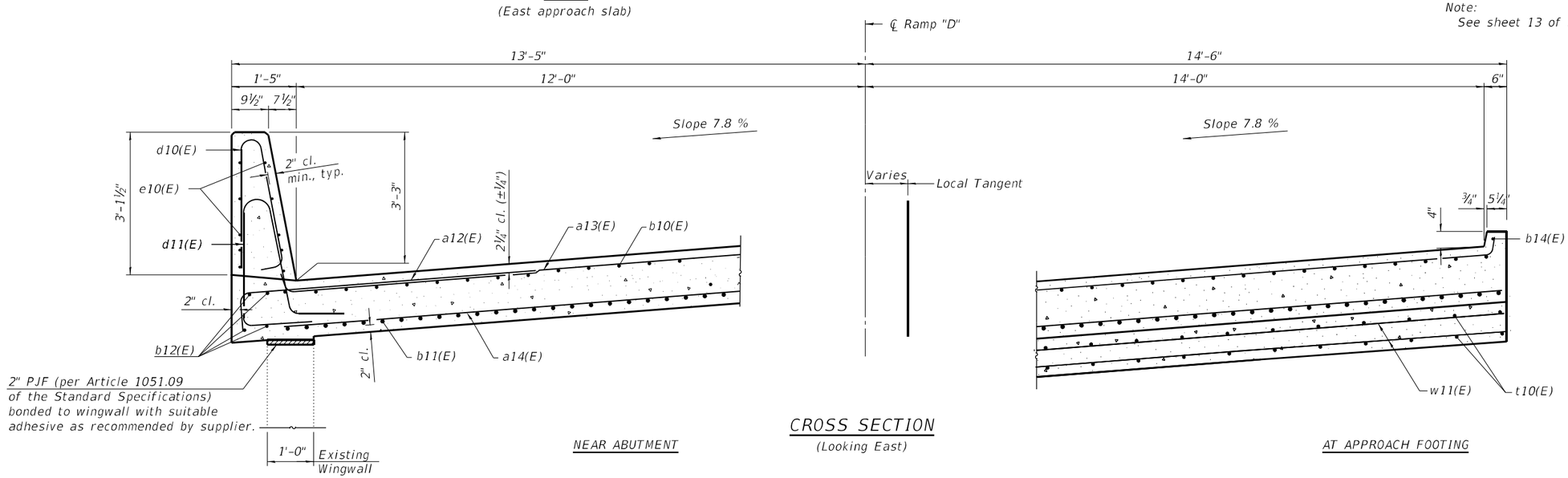

NEAR ABUTMENT

CROSS SECTION

(Looking East)

AT APPROACH FOOTING

BAIA-CIP-39CS-L(≤30°) 2-1-2023

(Sheet 1 of 2)

MODEL: Default
FILE NAME: P:\Transportation\4854 - IDOT PTB 198-023 D6\DWG\04\CADD S\1054-0051-72220-012-Approach Slab East.dgn

CDI CIVIL DESIGN, INC. WBE / DBE EFFINGHAM, IL LICENSE #184.003222

USER NAME = $USER$	DESIGNED -	REVISED -
	DRAWN -	REVISED -
PLOT SCALE = $SCALE$	CHECKED -	REVISED -
PLOT DATE = 12/19/2024	DATE -	REVISED -

STATE OF ILLINOIS
DEPARTMENT OF TRANSPORTATION

EAST BRIDGE APPROACH SLAB DETAILS
STRUCTURE NO. 054-0051

SCALE: | SHEET 12 OF 36 SHEETS | STA. TO STA.

F.A.I. RTE.	SECTION	COUNTY	TOTAL SHEETS	SHEET NO.
155	(54-4HB)D	LOGAN	133	109

CONTRACT NO. 72220

ILLINOIS | FED. AID PROJECT

Notes:

The joint opening shall be adjusted for temperature per Article 520.04 of the Standard Specifications. However, since this detail is for jointless structures, the length of bridge used to calculate the adjustment shall be equal to half the total bridge length plus the length of the bridge approach slab.

Parapet concrete shall be paid for as Concrete Superstructure.

Approach slab shall be paid for as Concrete Superstructure (Approach Slab).

Approach footing concrete shall be paid for as Concrete Structures.

The approach footing maximum applied service bearing pressure (Qmax) = 2.0 ksf.

Cost of excavation for approach footing included with Concrete Structures.

For Granular Backfill for Structures, see sheet 2 of 36.

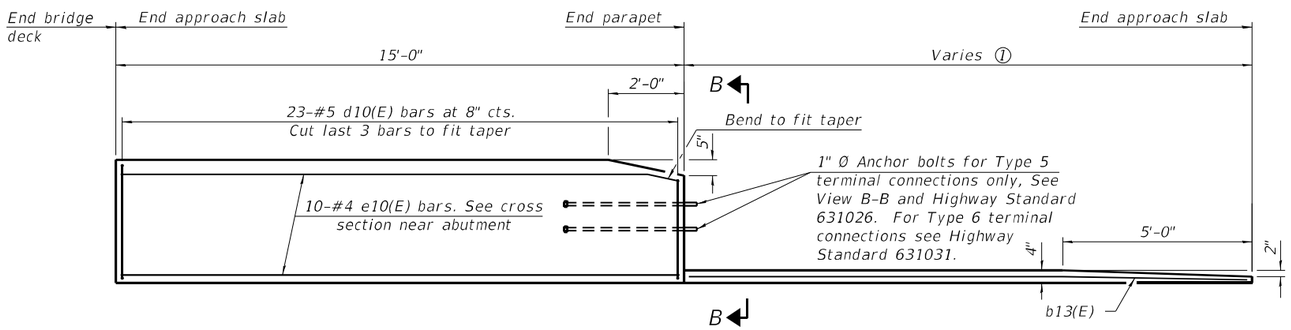

INSIDE ELEVATION OF PARAPET AND CURB

① 13'-6¾" Northwest Corner
13'-6" Southwest Corner
17'-9¾" Northeast Corner
17'-5¼" Southeast Corner

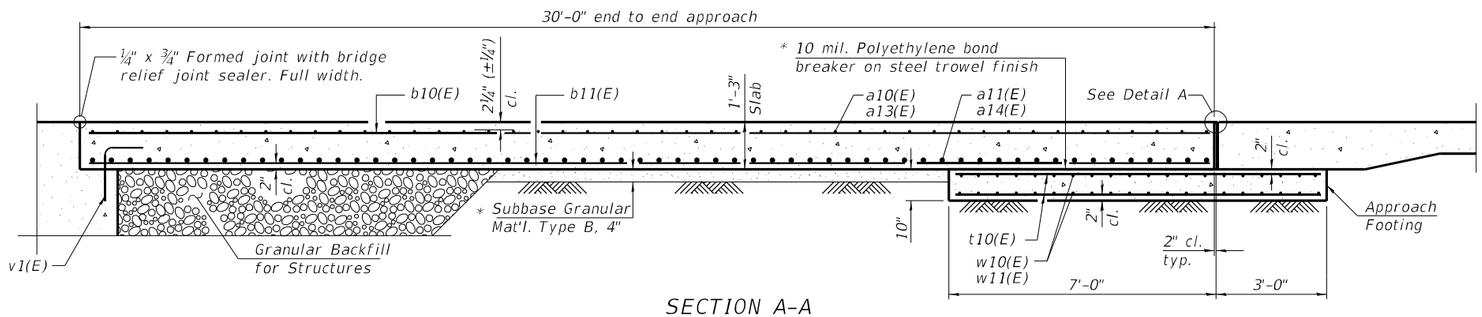

SECTION A-A

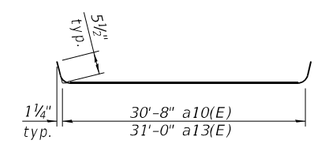

BAR a10(E) or a 13(E)

WEST APPROACH SLAB BILL OF MATERIAL

Bar	No.	Size	Length	Shape
a10(E)	44	#5	31'-7"	
a11(E)	58	#8	30'-8"	
a12(E)	44	#5	7'-4"	
b10(E)	41	#5	28'-2"	
b11(E)	64	#9	28'-2"	
b12(E)	8	#5	14'-8"	
b13(E)	2	#4	13'-2"	
w10(E)	40	#5	27'-4"	
t10(E)	56	#4	10'-6"	
d10(E)	46	#5	6'-5"	
d11(E)	46	#5	8'-6"	
e10(E)	20	#4	14'-8"	
Concrete Superstructure			Cu. Yd.	3.9
Concrete Superstructure (Approach Slab)			Cu. Yd.	37.8
Concrete Structures			Cu. Yd.	8.6
Reinforcement Bars, Epoxy Coated			Pound	16,460

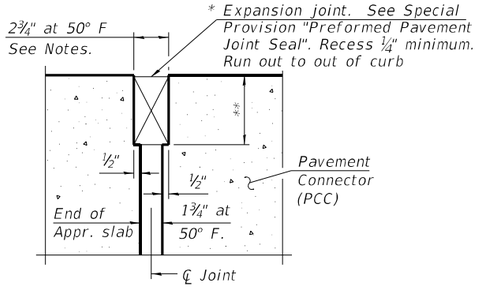

DETAIL A

(at Rt. L's)

* Cost included with Concrete Superstructure (Approach Slab).

** Per manufacturer recommendations

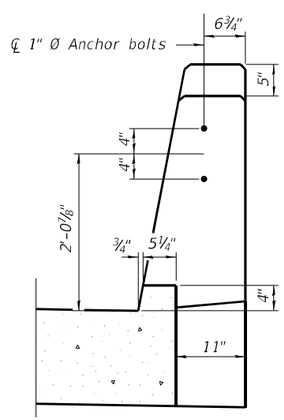

VIEW B-B

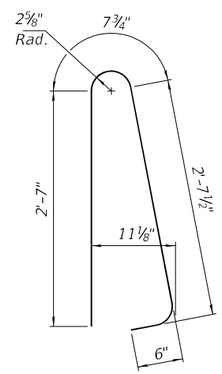

BAR d10(E)

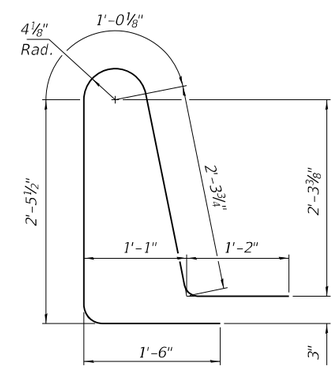

BAR d11(E)

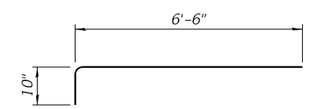

BAR a12(E)

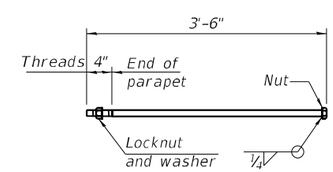

*1" Ø ANCHOR BOLT

(Anchor bolt assemblies shall be galvanized according to Article 1006.09 of the Standard Specifications)

EAST APPROACH SLAB BILL OF MATERIAL

Bar	No.	Size	Length	Shape
a12(E)	44	#5	7'-4"	
a13(E)	50	#5	31'-7"	
a14(E)	66	#8	30'-8"	
b10(E)	41	#5	32'-6"	
b11(E)	66	#9	32'-6"	
b12(E)	8	#5	14'-8"	
b14(E)	2	#4	17'-4"	
w11(E)	40	#5	31'-9"	
t10(E)	66	#4	10'-6"	
d10(E)	46	#5	6'-5"	
d11(E)	46	#5	8'-6"	
e10(E)	20	#4	14'-8"	
Concrete Superstructure			Cu. Yd.	3.9
Concrete Superstructure (Approach Slab)			Cu. Yd.	43.3
Concrete Structures			Cu. Yd.	10.0
Reinforcement Bars, Epoxy Coated			Pound	18,920

BAIA-CIP-39CS-L(≤30°) 2-1-2023

(Sheet 2 of 2)

MODEL: Default
FILE NAME: P:\Transportation\4854 - IDOT PTB 198-023 D60W04\CADD S\054-0051-72220-013-Approach Slab Detail.dgn

CDI CIVIL DESIGN, INC. WBE / DBE EFFINGHAM, IL LICENSE #184.003222

USER NAME = $USER$	DESIGNED -	REVISED -
	DRAWN -	REVISED -
PLOT SCALE = $SCALE$	CHECKED -	REVISED -
PLOT DATE = 12/19/2024	DATE -	REVISED -

STATE OF ILLINOIS
DEPARTMENT OF TRANSPORTATION

BRIDGE APPROACH SLAB DETAILS
STRUCTURE NO. 054-0051

SCALE: SHEET 13 OF 36 SHEETS STA. TO STA.

F.A.I. RTE.	SECTION	COUNTY	TOTAL SHEETS	SHEET NO.
155	(54-4HB)D	LOGAN	133	110
		CONTRACT NO. 72220		
	ILLINOIS	FED. AID PROJECT		

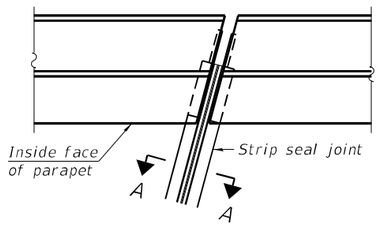

PLAN AT PARAPET

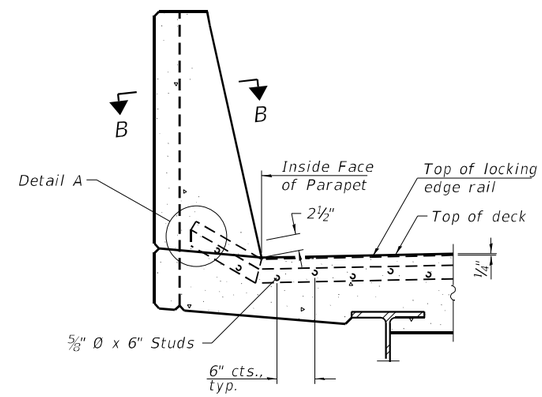

SECTION AT PARAPET

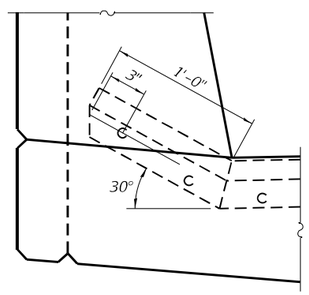

DETAIL A

Notes:

The strip seal shall be made continuous and shall have a minimum thickness of ¼". The configuration of the strip seal shall match the configuration of the locking edge rails. Open or "webbed" strip seal gland configurations are not permitted. The gland shall be sized for a maximum rated movement of 4 inches.

The locking edge rails depicted are configured for typical applications and are conceptual only. The actual configuration of the locking edge rails and matching strip seal may vary from manufacturer to manufacturer provided they fit the application and meet the minimum anchorage shown. Flanged edge rails, however, will not be allowed. Locking edge rails may exceed the 4½" maximum depth provided the anchorage system is revised according to the manufacturer's recommendation.

The manufacturer's recommended installation methods shall be followed.

All steel components shall be galvanized after fabrication according to Article 520.03 of the Standard Specifications.

The Maximum space between locking edge rail segments shall be 3/16" and sealed with a suitable sealant; however, any rail joint within 10' measured perpendicular to the face of the curb or parapet shall be welded as shown in the locking edge rail splice detail.

Cost of parapet sliding plates, embedded plates, and anchorage studs included with Preformed Joint Strip Seal.

39" constant slope barrier shown, 44" constant slope barrier similar as noted.

The concrete opening below the strip seal will vary based on the locking edge rail chosen by the Contractor. Deck and parapet lengths shown elsewhere in the plans are dimensioned to the concrete opening, not the joint opening, and are based on the rolled locking edge rail. If the Contractor elects to use a different locking edge rail, dimensional adjustments may be required. One exception to this would be the strip seal joint at the end of the precast bridge approach slab. For these cases the pavement connector length shall be adjusted, not the length of the bridge approach slab.

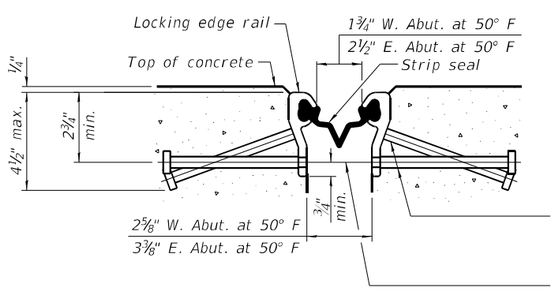

SHOWING ROLLED RAIL JOINT

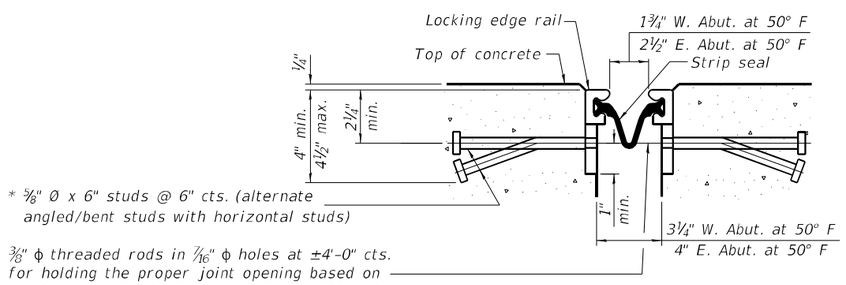

SHOWING WELDED RAIL JOINT

* ⅝" Ø x 6" studs @ 6" cts. (alternate angled/bent studs with horizontal studs)

⅜" ϕ threaded rods in 7/16" ϕ holes at ±4'-0" cts. for holding the proper joint opening based on the temperature during the deck pour. Place to miss studs. All rods shall be burned, or sawed off flush with the plates after concrete is set.

SECTION A-A

* Granular or solid flux filled headed studs conforming to Article 1006.32 of the Std. Specs., automatically end welded.

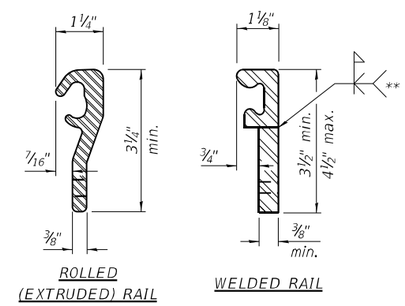

ROLLED (EXTRUDED) RAIL

WELDED RAIL

LOCKING EDGE RAILS

** Back gouge not required if complete joint penetration is verified by mock-up.

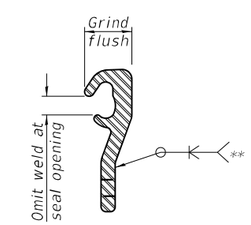

LOCKING EDGE RAIL SPLICE

The inside of the locking edge rail groove shall be free of weld residue. Rolled rail shown, welded rail similar.

BILL OF MATERIAL

Item	Unit	Total
Preformed Joint Strip Seal	Foot	62

EJ-SS 1-1-2020

MODEL: Default
FILE NAME: P:\Transportation\4854 - IDOT PTB 198-023 D6\0\04\CADD S\1054-0051-72220-014-Preform Joint StripSeal.dgn

CDI CIVIL DESIGN, INC. WBE / DBE EFFINGHAM, IL LICENSE #184.003222

USER NAME = $USER$	DESIGNED -	REVISED -	
	DRAWN -	REVISED -	
PLOT SCALE = $SCALE$	CHECKED -	REVISED -	
PLOT DATE = 12/19/2024	DATE -	REVISED -	

STATE OF ILLINOIS
DEPARTMENT OF TRANSPORTATION

PREFORMED JOINT STRIP SEAL
STRUCTURE NO. 054-0051

SCALE: SHEET 14 OF 36 SHEETS STA. TO STA.

F.A.I. RTE.	SECTION	COUNTY	TOTAL SHEETS	SHEET NO.
155	(54-4HB)D	LOGAN	133	111
		CONTRACT NO. 72220		
	ILLINOIS	FED. AID PROJECT		

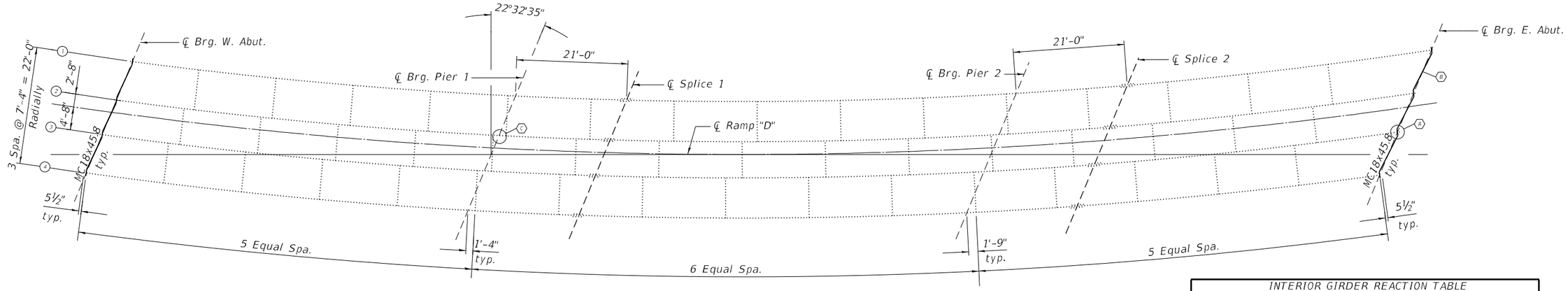

PLAN

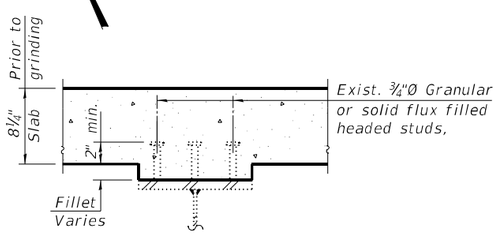

SECTION A-A

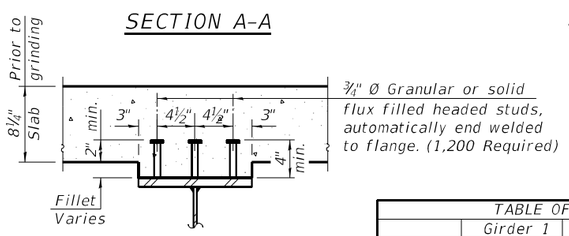

SECTION B-B

Ⓐ - Jack and replace all bearings at both the W. Abut. and E. Abut. (8 locations). See sheet 18 of 36 for details and quantities.

Ⓑ - Remove portion and repair all end diaphragms at both the W. Aubt. and E. Abut. (6 locations). See sheet 16 of 36 for details and quantities.

Ⓒ - Repair bearing stiffener. See sheet 10 of 36 for details and quantities.

TABLE OF GIRDER DIMENSIONS				
	Girder 1	Girder 2	Girder 3	Girder 4
Radius	879.47'	886.80'	894.13'	901.47'
A	72'-7⅞"	72'-6 1/16"	72'-6"	72'-5 5/16"
B	94'-7⅛"	94'-5 7/16"	94'-3 13/16"	94'-2¼"
C	78'-10 3/16"	78'-7 15/16"	78'-5 11/16"	78'-3½"
D	66'-7⅛"	66'-5 7/16"	66'-3 13/16"	66'-2¼"
E	58'-3 11/16"	58'-1 7/16"	57'-11 3/16"	57'-9"

INTERIOR GIRDER MOMENT TABLE						
		0.4 Sp. 1	Pier1	0.5 Sp. 1	Pier2	0.6 Sp. 2
Is	(in^4)	14,050	24,745	15,228	26,547	15,228
Ic(n)	(in^4)	41,553	54,120	46,674	57,039	46,674
Ic(3n)	(in^4)	30,259	40,435	33,419	42,621	33,419
Ss	(in^3)	743	1,094	856	1,873	856
Sc(n)	(in^3)	1,076	7,855	1,232	7,824	1,734
Sc(3n)	(in^3)	1,375	2,854	1,518	2,927	1,518
Sℓ	(in^3)	37	-	45	-	45
℘	(k/')	0.90	0.97	0.91	0.99	0.91
M℘	('k)	288	709	278	791	347
s℘	(k/')	0.29	0.29	0.29	0.29	0.29
Ms℘	('k)	101	211	104	229	121
M℄	('k)	499	486	545	506	550
MI	('k)	169	153	161	157	179
$\frac{5}{3}$[M℄ + MI]	('k)	1,113	1,065	1,177	1,103	1,215
Ma	('k)	1,953	2,581	2,026	2,760	2,188
Mbℓ	('k)	3	-	3.0	-	3.0
fs℘ (non-comp)	(ksi)	4.7	7.8	3.9	5.1	4.9
fs℘ (comp)	(ksi)	0.9	-	0.8	0.0	1.0
fs $\frac{5}{3}$ [M℄ + MI]	(ksi)	12.4	11.7	11.5	7.1	8.4
fℓ	(ksi)	0.84	-	0.82	0.72	0.83
fs(Overload)	(ksi)	18.0	19.5	16.2	12.2	14.3
fs(Total)	(ksi)	23.4	25.4	21.1	15.9	18.6
Fcr(Overload)	(ksi)	47.5	47.5	47.5	47.5	47.5
VR	(k)	19.4	23.8	17.9	22.7	18.2
Fcr	(ksi)	50	-	50	-	50

INTERIOR GIRDER REACTION TABLE					
		N. Abut.	Pier 1	Pier 2	S. Abut.
R℘	(k)	23.8	86.6	93.9	26.6
Rs℘	(k)	7.7	27.2	29.0	8.4
R℄	(k)	45.1	61.3	65.0	47.3
RI	(k)	15.3	19.4	20.1	15.4
R_{Total}	(k)	91.9	194.5	208.0	97.7

Is, Ss: Non-composite moment of inertia and section modulus of the steel section used for computing fs(Total and Overload) due to non-composite dead loads ($in.^4$ and $in.^3$).

Ic(n), Sc(n): Composite moment of inertia and section modulus of the steel and deck based upon the modular ratio, "n", used for computing fs(Total and Overload) due to short-term composite live loads ($in.^4$ and $in.^3$).

Ic(3n), Sc(3n): Composite moment of inertia and section modulus of the steel and deck based upon 3 times the modular ratio, "3n", used for computing fs(Total and Overload) due to long-term composite (superimposed) dead loads ($in.^4$ and $in.^3$).

Sℓ: Section modulus of one flange plate for lateral flange bending ($in.^3$).

℘: Un-factored non-composite dead load (kips/ft.).

M℘: Un-factored moment due to non-composite dead load (kip-ft).

s℘: Un-factored long-term composite (superimposed) dead load (kips/ft.).

Ms℘: Un-factored moment due to long-term composite (superimposed) dead load (kip-ft.).

M℄: Un-factored live load moment (kip-ft.).

MI: Un-factored moment due to impact (kip-ft).

Ma: Factored design moment (kip-ft.). 1.3 [M℘ + Ms℘ + $\frac{5}{3}$ (M℄ + MI)]

Mbℓ: Factored lateral bending moment for flange plate (kip-ft.).

fℓ: Factored calculated normal stress at the edge of flange due to lateral bending (ksi).

fs(Overload): Sum of stresses as computed from the moments below (ksi). M℘ + Ms℘ + $\frac{5}{3}$ (M℄ + MI)

fs(Total): Sum of stresses as computed from the moments below (ksi). 1.3 [M℘ + Ms℘ + $\frac{5}{3}$ (M℄ + MI)]

Fcr(Overload): Critical average flange stress at overload computed according to the 2003 AASHTO Guide Specifications for Horizontally Curved Steel Girder Highway Bridges Section 9.5 (ksi.).

Fcr: Critical average flange stress (smaller of Fcr1 or Fcr2 for partially braced flanges and F_y for continuously braced flanges) computed according to the 2003 AASHTO Guide Specifications for Horizontally Curved Steel Girder Highway Bridges (Sections 5.2, 5.3 and 5.4) (ksi).

VR: Maximum℄ + impact shear range within span for stud shear connector design (kips).

Note:
M℄ and R℄ include the effects of centrifugal force and superelevation.

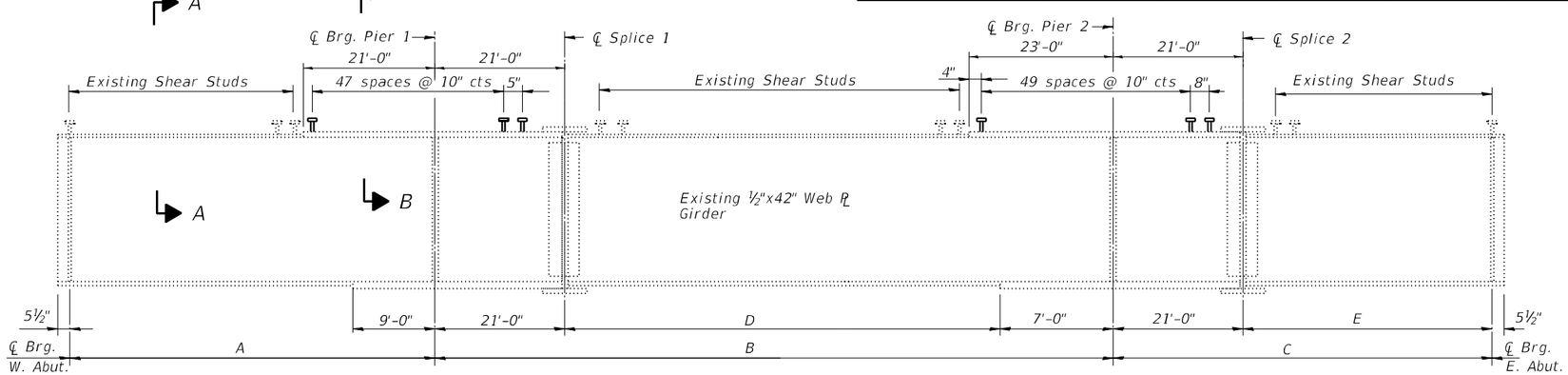

GIRDER ELEVATION

BILL OF MATERIAL

ITEM	UNIT	TOTAL
Stud Shear Connectors	Each	1,200

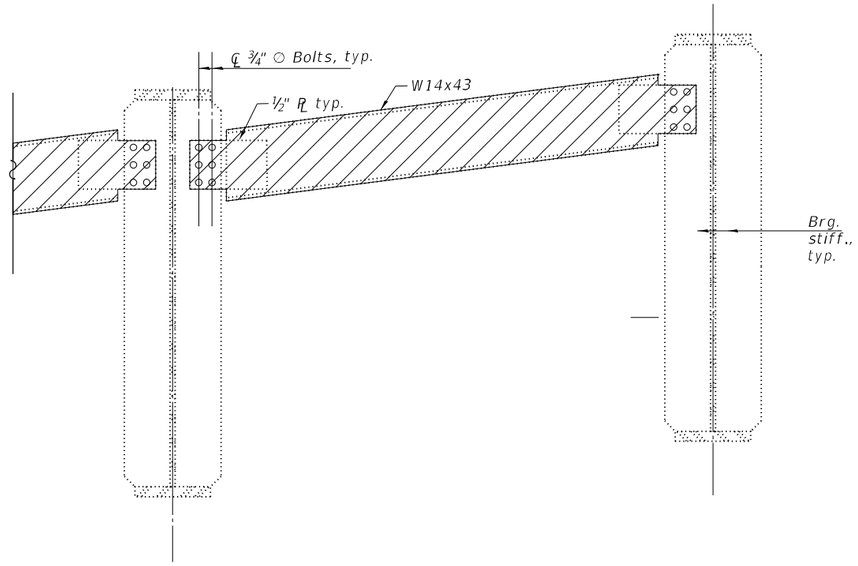

EXISTING END DIAPHRAGM REMOVAL DETAIL

Remove each end diaphragm at both
the W. Abut and E. Abut. (6 Locations).
Cost included with Structural Steel Repair
(North Abutment Shown, South Abutment Similar)

LEGEND

To be Removed

BOLT HOLE LEGEND

○ or ● – Field drill using existing steel or template

Note:
Two hardened washers for each
diaphragm connection.

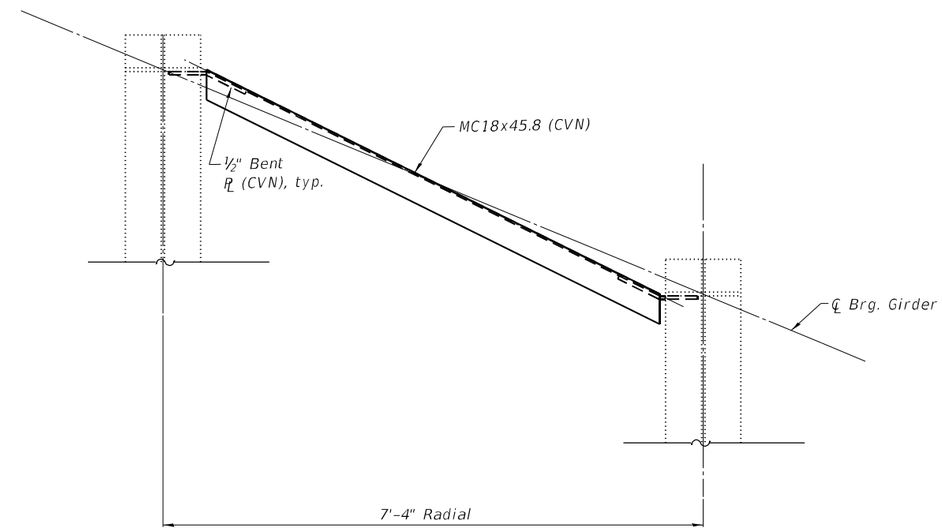

PLAN

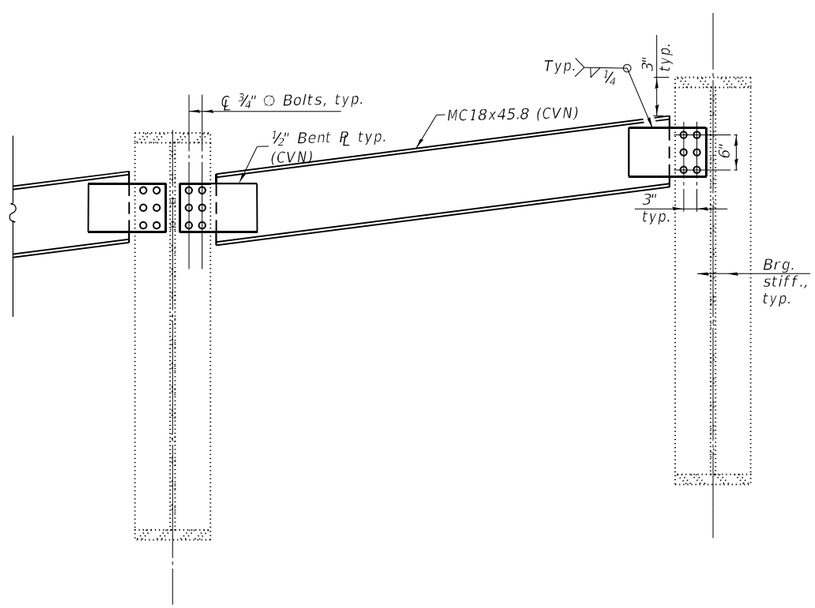

EXISTING END DIAPHRAGM REPAIR DETAIL

"CVN" denotes Charpy-V-Notch impact
energy requirements, zone 2.

BILL OF MATERIAL

ITEM	UNIT	TOTAL
Structural Steel Repair	Pound	2,780

MODEL: Default
FILE NAME: P:\Transportation\4854 - IDOT PTB 198-023 D600\W04\CADD S\054-0051-72220-016-Structural Repair Details.dgn

CIVIL DESIGN, INC.
WBE / DBE
EFFINGHAM, IL
LICENSE #184.003222

USER NAME = $USER$	DESIGNED -	REVISED -
	DRAWN -	REVISED -
PLOT SCALE = $SCALE$	CHECKED -	REVISED -
PLOT DATE = 12/19/2024	DATE -	REVISED -

STATE OF ILLINOIS
DEPARTMENT OF TRANSPORTATION

STRUCTURAL REPAIR DETAILS
STRUCTURE NO. 054–0051

SCALE: | SHEET 16 OF 36 SHEETS | STA. | TO STA.

F.A.I. RTE.	SECTION	COUNTY	TOTAL SHEETS	SHEET NO.
155	(54-4HB)D	LOGAN	133	113

CONTRACT NO. 72220
ILLINOIS | FED. AID PROJECT

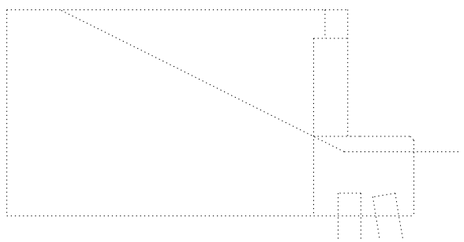

SOUTH WINGWALL

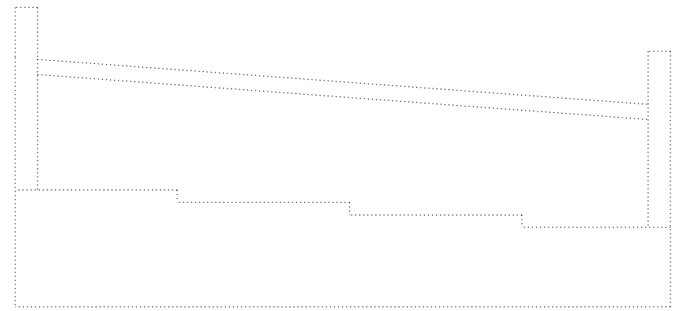

WEST ABUTMENT

(Looking West)

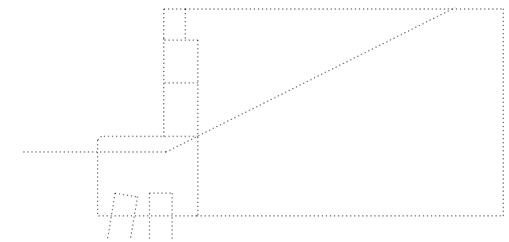

NORTH WINGWALL

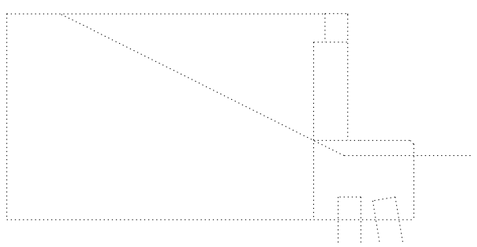

NORTH WINGWALL

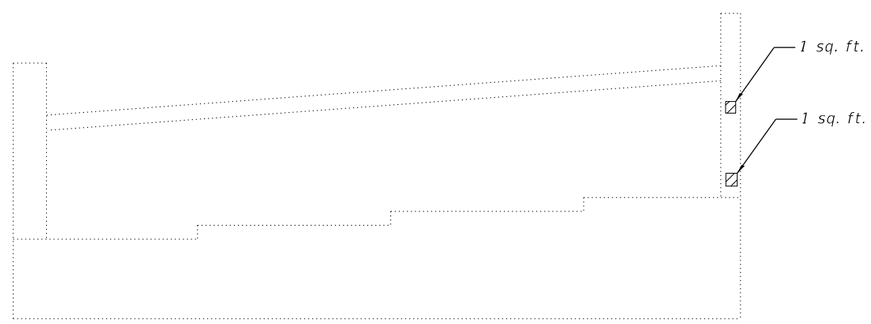

EAST ABUTMENT

(Looking East)

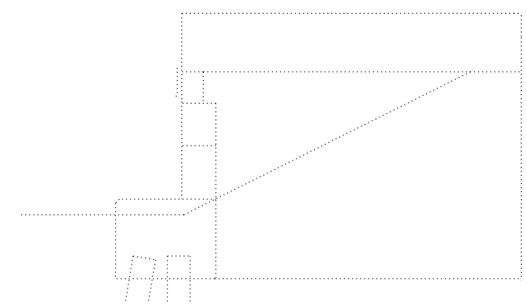

SOUTH WINGWALL

Structural Repair of Concrete
(Depth Equal to or less than 5")

BILL OF MATERIAL

ITEM	UNIT	TOTAL
Structural Repair of Concrete (Depth Equal to or less than 5")	Sq. Ft.	2

MODEL: Default
FILE NAME: P:\Transportation\4854 - IDOT PTB 198-093 D&B\WO\CADD 5\1054-0051-72220-017-Abutment Repair Details.dgn

CIVIL DESIGN, INC.
WBE / DBE
EFFINGHAM, IL
LICENSE #184.003222

USER NAME = $USER$	DESIGNED -	REVISED -
	DRAWN -	REVISED -
PLOT SCALE = $SCALE$	CHECKED -	REVISED -
PLOT DATE = 12/19/2024	DATE -	REVISED -

STATE OF ILLINOIS
DEPARTMENT OF TRANSPORTATION

ABUTMENT REPAIR DETAILS
STRUCTURE NO. 054–0051

SCALE: | SHEET 17 OF 36 SHEETS | STA. TO STA.

F.A.I. RTE.	SECTION	COUNTY	TOTAL SHEETS	SHEET NO.
155	(54-4HB)D	LOGAN	133	114
		CONTRACT NO. 72220		
		ILLINOIS	FED. AID PROJECT	

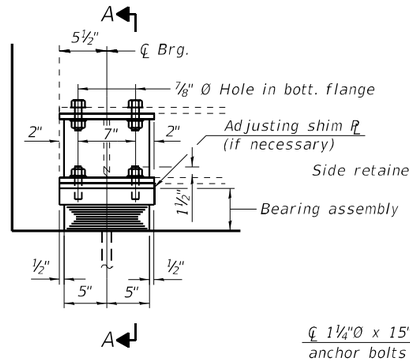

ELEVATION

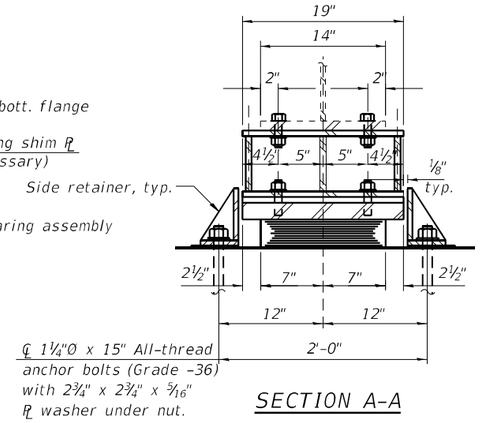

SECTION A-A

TYPE I ELASTOMERIC EXP. BRG. AT ABUTMENTS

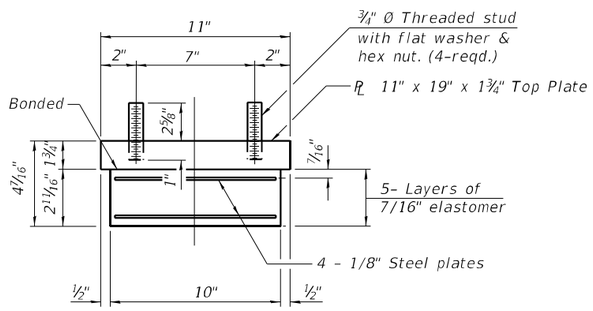

BEARING ASSEMBLY

(West Abutment)

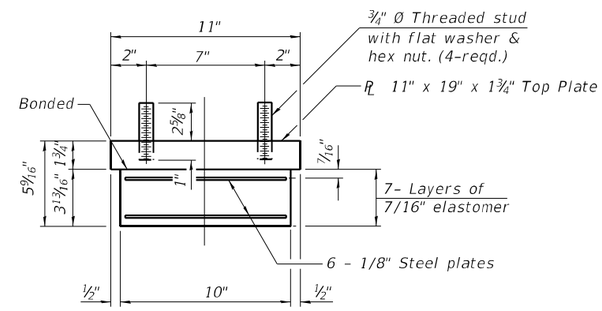

BEARING ASSEMBLY

(East Abutment)

Notes:

Side retainers and stainless steel plates shall be included in the cost of Elastomeric Bearing Assembly, Type I.

The Contractor shall verify the existing dimensions prior to fabricating the bearing extensions. Cost of extensions included with Furnishing and Erecting Structural Steel.

Two ⅛" adjusting shims shall be provided for each bearing in addition to all other plates or shims and placed as shown on bearing details.

Shim plates shall not be placed under bearing assembly.

The structural steel plates of Bearing Assembly shall conform to the requirements of AASHTO M270 Grade 50.

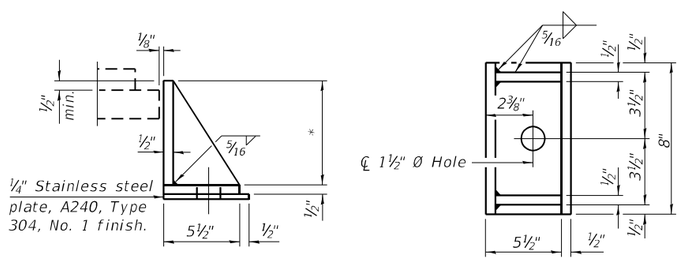

* 4¼" for Bearings at West Abutment

* 5⅜" for Bearings at East Abutment

SIDE RETAINER

Equivalent rolled angle with stiffeners will be allowed in lieu of welded plates.

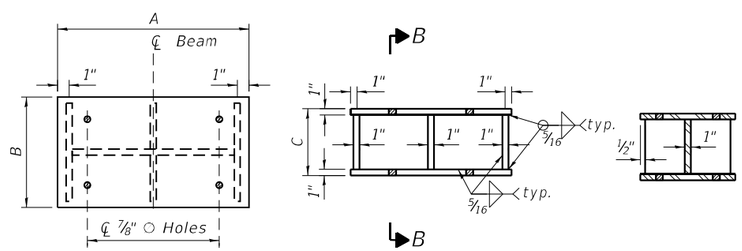

PLAN ELEVATION SECTION B-B

STEEL EXTENSION DETAILS

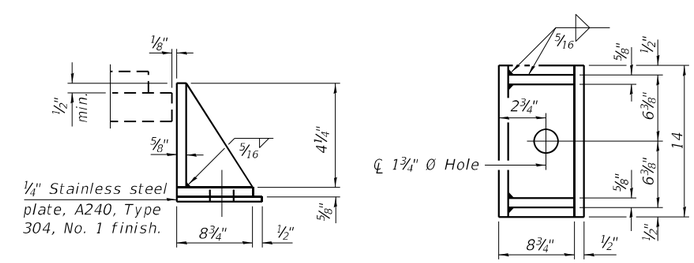

SIDE RETAINER

Equivalent rolled angle with stiffeners will be allowed in lieu of welded plates.

STEEL EXTENSION DIMENSIONS

Item	A	B	C
West Abutment	19"	11"	6 11/16"
East Abutment	19"	11"	5 9/16"

BILL OF MATERIAL

Item	Unit	Total
Elastomeric Bearing Assembly, Type I	Each	8
Anchor Bolts, 1 1/4"	Each	16
Furnishing and Erecting Structural Steel	Pound	330
Jack and Remove Existing Bearings	Each	8

I-2E-1 6-15-2019

MODEL: Default
FILE NAME: P:\Transportation\4854 - IDOT PTB 198-023 06\0\Cad\CAD\5 11054-0051-72220-018-Expansion Bearing Details.dgn

CDI CIVIL DESIGN, INC. WBE / DBE EFFINGHAM, IL LICENSE #184.003222

USER NAME = $USER$	DESIGNED -	REVISED -
	DRAWN -	REVISED -
PLOT SCALE = $SCALE$	CHECKED -	REVISED -
PLOT DATE = 12/19/2024	DATE -	REVISED -

STATE OF ILLINOIS
DEPARTMENT OF TRANSPORTATION

BEARING DETAILS
STRUCTURE NO. 054-0051

SCALE: SHEET 18 OF 36 SHEETS STA. TO STA.

F.A.I. RTE.	SECTION	COUNTY	TOTAL SHEETS	SHEET NO.
155	(54-4HB)D	LOGAN	133	115
		CONTRACT NO. 72220		
		ILLINOIS FED. AID PROJECT		

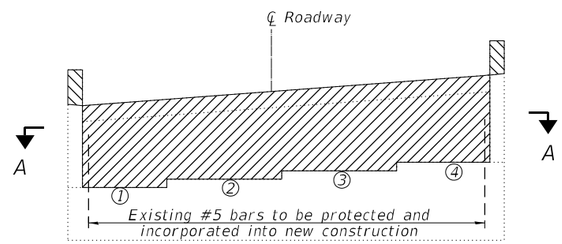

ELEVATION

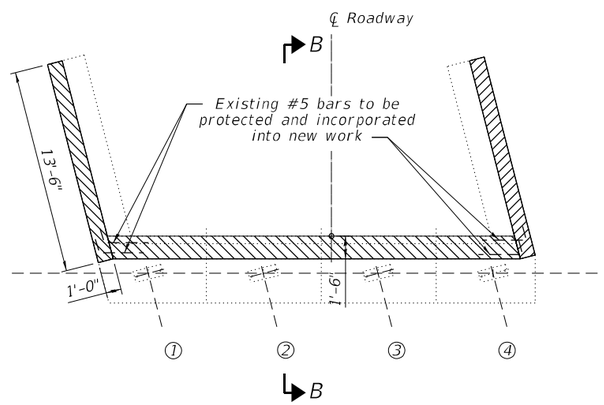

SECTION A-A

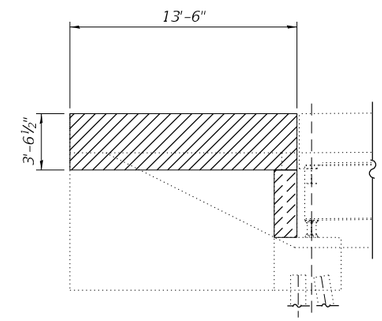

SOUTH WING WALL ELEVATION

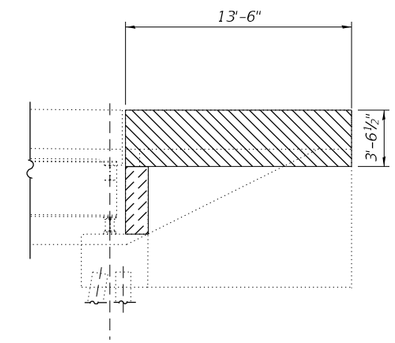

NORTH WING WALL ELEVATION

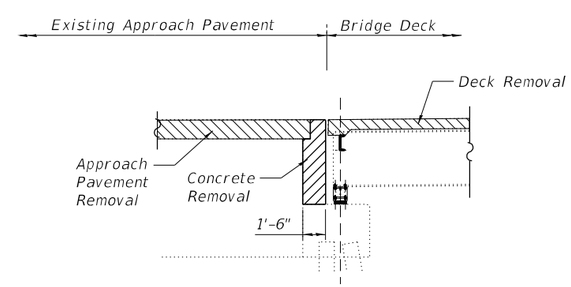

SECTION B-B

BILL OF MATERIAL

ITEM	UNIT	TOTAL
Concrete Removal	Cu. Yd.	13.8

MODEL: Default
FILE NAME: P:\Transportation\4654 - IDOT PTB 198-023 D60W004\CADD 5\0054-0051-72220-019-Concrete Removal East.dgn

CIVIL DESIGN, INC.
WBE / DBE
EFFINGHAM, IL
LICENSE #184.003222

USER NAME = $USER$	DESIGNED -	REVISED -
	DRAWN -	REVISED -
PLOT SCALE = $SCALE$	CHECKED -	REVISED -
PLOT DATE = 12/19/2024	DATE -	REVISED -

STATE OF ILLINOIS
DEPARTMENT OF TRANSPORTATION

CONCRETE REMOVAL EAST ABUTMENT
STRUCTURE NO. 054-0051

SCALE: | SHEET 19 OF 36 SHEETS | STA. | TO STA.

F.A.I. RTE.	SECTION	COUNTY	TOTAL SHEETS	SHEET NO.
155	(54-4HB)D	LOGAN	133	116

CONTRACT NO. 72220
ILLINOIS | FED. AID PROJECT

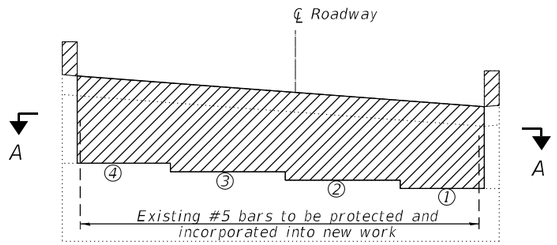

ELEVATION

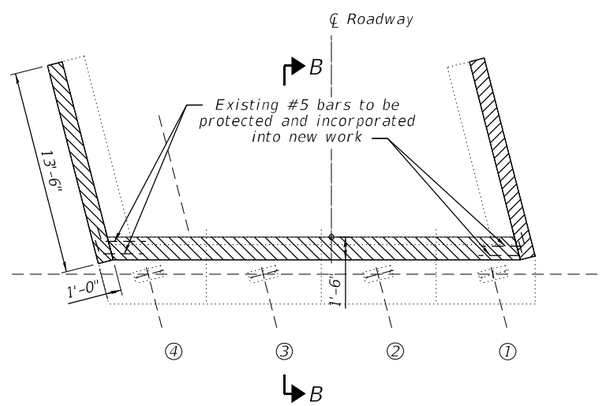

SECTION A-A

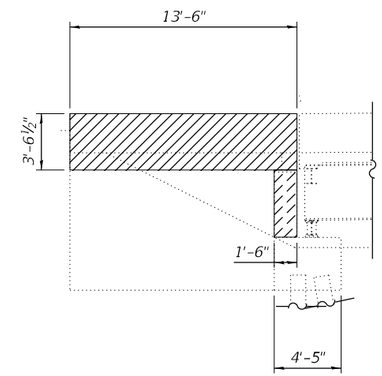

SOUTH WING WALL ELEVATION

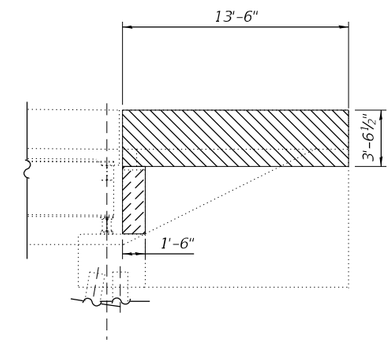

NORTH WING WALL ELEVATION

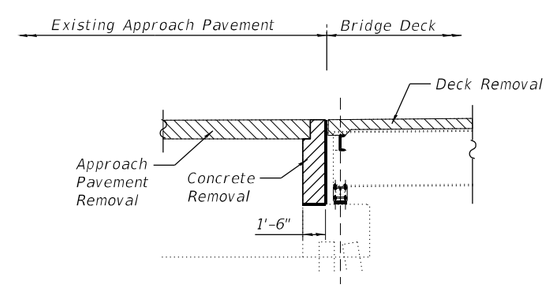

SECTION B-B

BILL OF MATERIAL

ITEM	UNIT	TOTAL
Concrete Removal	Cu. Yd.	12.7

MODEL: Default
FILE NAME: P:\Transportation\4854 - IDOT PTB 198-023 D6&W\DwtCADD 5\1054-0051-72220-020-Concrete Removal West.dgn

CDI
CIVIL DESIGN, INC.
WBE / DBE
EFFINGHAM, IL
LICENSE #184.003222

USER NAME = $USER$	DESIGNED -	REVISED -
	DRAWN -	REVISED -
PLOT SCALE = $SCALE$	CHECKED -	REVISED -
PLOT DATE = 12/19/2024	DATE -	REVISED -

STATE OF ILLINOIS
DEPARTMENT OF TRANSPORTATION

CONCRETE REMOVAL WEST ABUTMENT
STRUCTURE NO. 054-0051

SCALE: | SHEET 20 OF 36 SHEETS | STA. | TO STA.

F.A.I. RTE.	SECTION	COUNTY	TOTAL SHEETS	SHEET NO.
155	(54-4HB)D	LOGAN	133	117

CONTRACT NO. 72220
ILLINOIS | FED. AID PROJECT

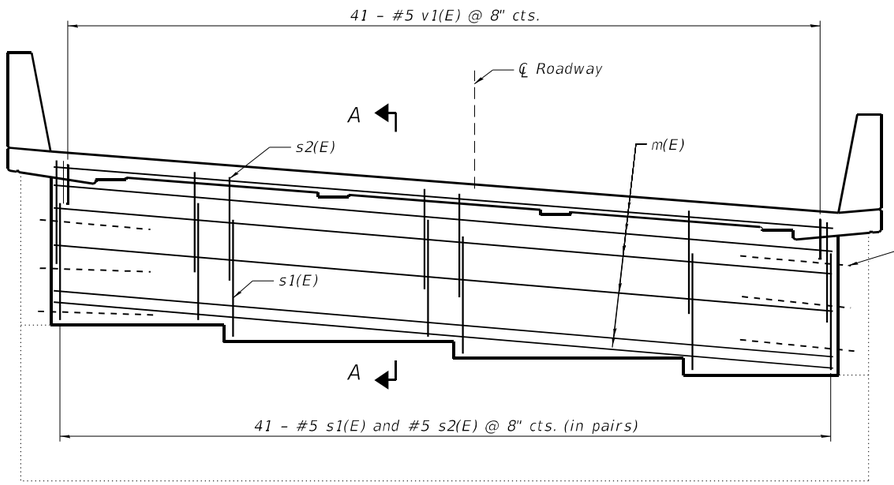

ELEVATION
(W. Abut. Looking West)

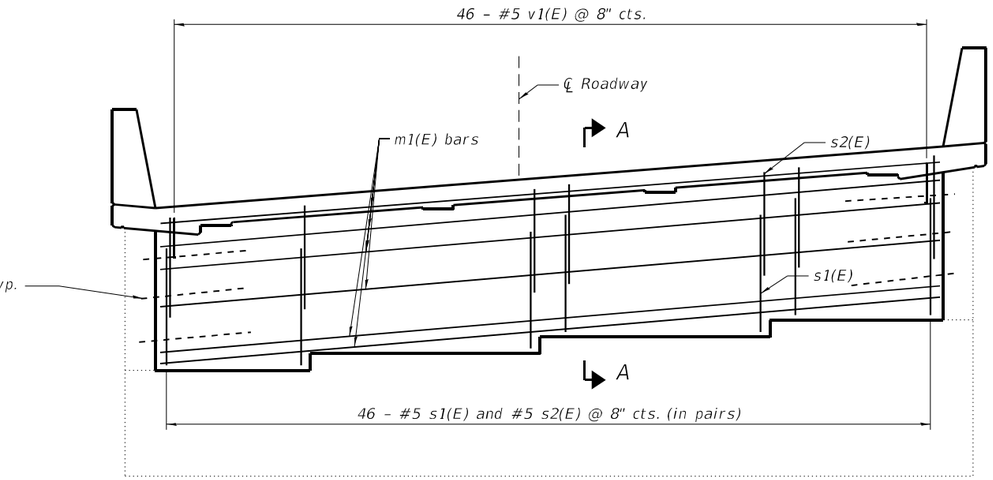

Exist. v Bars to be protected and incorporated in new const. typ.

ELEVATION
(E. Abut. Looking East)

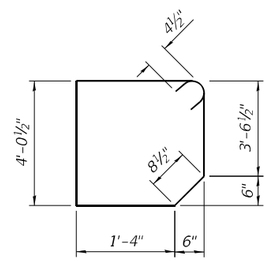

BAR s1(E)

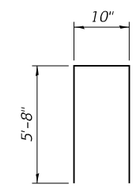

BAR s2(E)

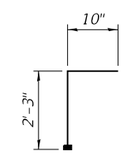

BAR v1(E)

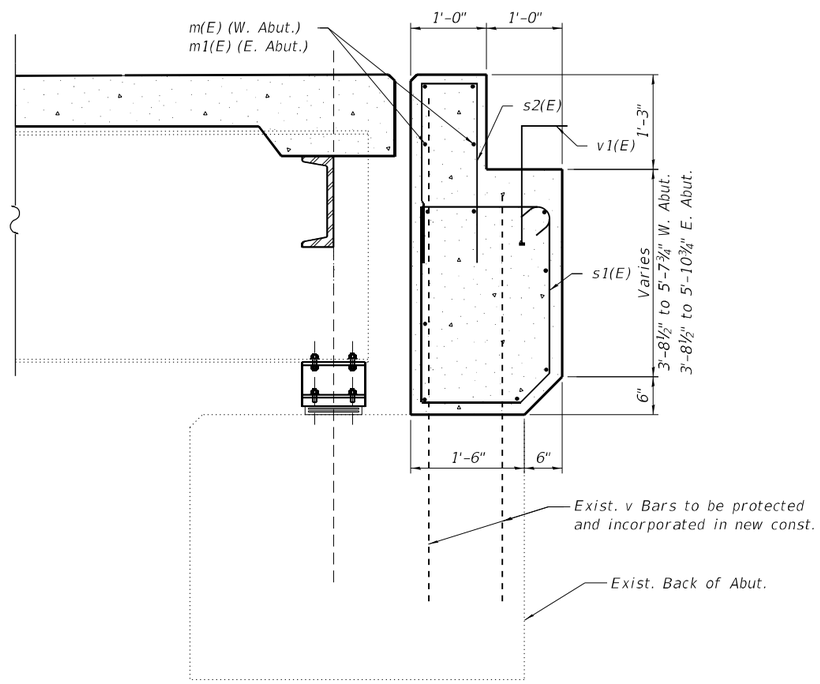

SECTION A-A

TWO ABUTMENT BACKWALL BILL OF MATERIAL

Bar	No.	Size	Length	Shape
m(E)	12	#5	26'-6"	◘
m1(E)	12	#5	29'-11"	Π
s1(E)	87	#5	10'-5"	———
s2(E)	87	#5	12'-2"	———
v1(E)	87	#5	3'-1"	Γ
Concrete Structures			Cu. Yd.	12.4
Reinforcement Bars, Epoxy Coated			Pound	3,040

MODEL: Default
FILE NAME: P:\Transportation\4854 - IDOT PTB 198-023 ns\DWG\04\CADD_S\1054-0051-72220-021-Concrete Superstructure.dgn

CIVIL DESIGN, INC.
WBE / DBE
EFFINGHAM, IL
LICENSE #184.003222

USER NAME = $USER$	DESIGNED -	REVISED -
	DRAWN -	REVISED -
PLOT SCALE = $SCALE$	CHECKED -	REVISED -
PLOT DATE = 12/19/2024	DATE -	REVISED -

STATE OF ILLINOIS
DEPARTMENT OF TRANSPORTATION

ABUTMENT RECONSTRUCTION DETAILS
STRUCTURE NO. 054-0051

SCALE: | SHEET 21 OF 36 SHEETS | STA. TO STA.

F.A.I. RTE.	SECTION	COUNTY	TOTAL SHEETS	SHEET NO.
155	(54-4HB)D	LOGAN	133	118
		CONTRACT NO. 72220		
		ILLINOIS	FED. AID PROJECT	

Notes:
All dimensions shall remain the same as shown on superstructure details, except dimension A which is to be revised as shown. Additional concrete needed to revise dimension A = 0.00348 cu. yds./ft. for 39" and 44" parapets.
Place full depth aluminum sheets as shown on superstructure details.
Replace all cork joint filler locations with a full thickness saw cut.
Steel superstructure shown. Other superstructure types similar.

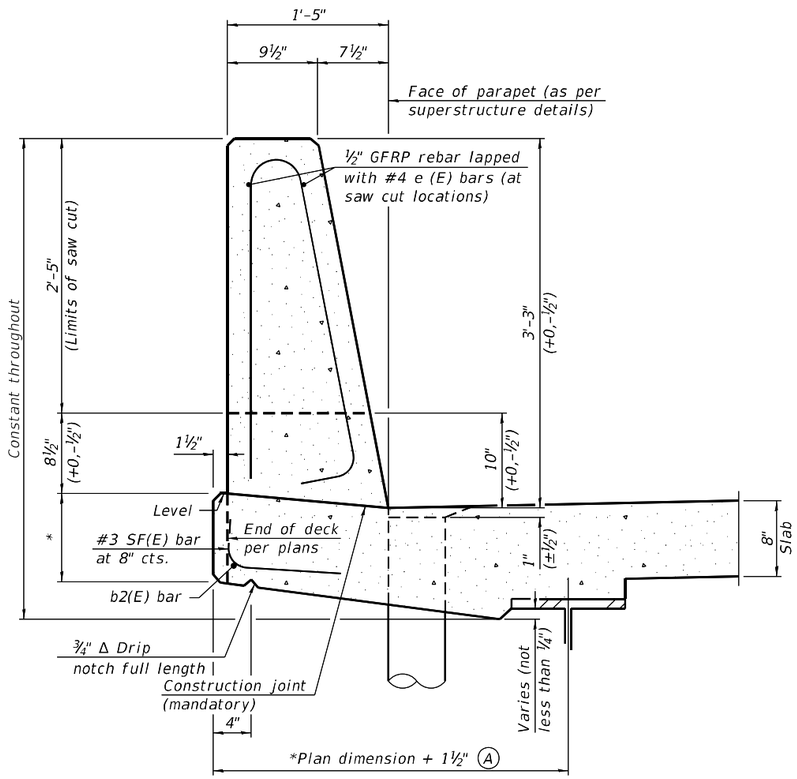

39" CONSTANT-SLOPE PARAPET SECTION

(Showing dimensions, d(E), and ½" Ø GFRP rebar)

*See Superstructure Details.

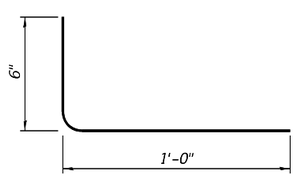

SF(E) BAR

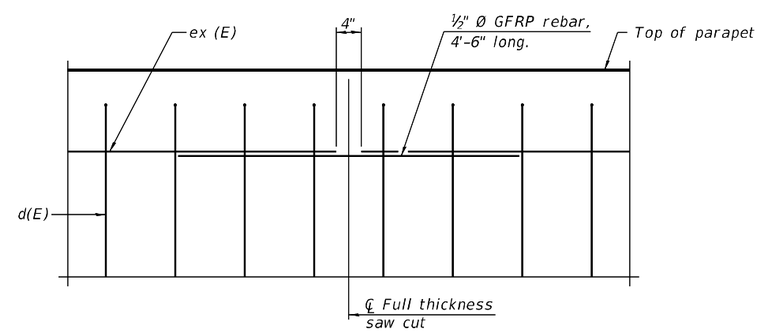

GFRP REBAR STIFFENING DETAIL

(Place as shown in parapet section at each parapet joint location.)

SFP 39-44 11-1-2022

MODEL: Default
FILE NAME: P:\Transportation\4854 - IDOT PTB 198-023 D60\W04\CADD S\0054-0051-7220\4022-Parapet_Slipform_Opt.dgn

CDI CIVIL DESIGN, INC. WBE / DBE EFFINGHAM, IL LICENSE #184.003222

USER NAME = $USER$	DESIGNED -	REVISED -	
	DRAWN -	REVISED -	
PLOT SCALE = $SCALE$	CHECKED -	REVISED -	
PLOT DATE = 12/19/2024	DATE -	REVISED -	

STATE OF ILLINOIS
DEPARTMENT OF TRANSPORTATION

CONCRETE PARAPET SLIPFORMING OPTION
STRUCTURE NO. 054-0051

SCALE: SHEET 22 OF 36 SHEETS STA. TO STA.

F.A.I. RTE.	SECTION	COUNTY	TOTAL SHEETS	SHEET NO.
155	(54-4HB)D	LOGAN	133	119
		CONTRACT NO. 72220		
	ILLINOIS	FED. AID PROJECT		

1. NO.27, 6" BOAT SPIKE IN ROUGH LEAF HACKBERRY
0' LT. STA.26+30, L RDWY. "F", ELEV. 571.879

TE: No Deck Drains Will be Permitted On The Structure

STATE OF ILLINOIS

ROUTE NO.	SECTION	COUNTY	TOTAL SHEETS	SHEET NO.
S. R. I. F.A.I-55	54-4HB	LOGAN	63	31
FED. ROAD DIST. NO. 7		ILLINOIS	FED. AID PROJECT	

SHEET NO. 18
36 SHEETS

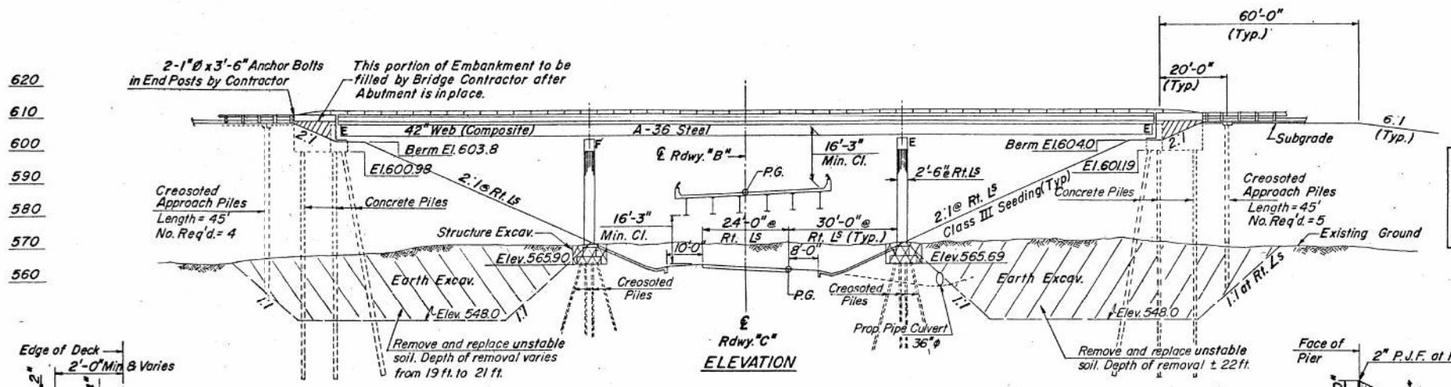

ELEVATION

NOTE: For additional information on Earth Excavation and Porous Granular Embankment see Sheets #5 & #10 of Roadway Plans & Special Provisions.

CURVE DATA
(Ramp "D")

P.I. STA. 18+87.71
Δ = 110°-21'-03"
D = 6°-30'
R = 881.47'
T = 1267.11'
L = 1697.70'
E = 662.08'
S.E. = 0.078 ft.
P.C. STA. 6+20.60
P.T. STA. 23+18.30

STATION 16+93.48 RAMP "D"
BUILT 197 BY
STATE OF ILLINOIS
F.A.I. RT. 55 SEC. 54-4HB
F.A. PROJ. I-
LOADING HS20 & ALT.

NAME PLATE
See Std. 2113

GENERAL NOTES

All reinforcement bars shall be lapped 24 diameters unless otherwise shown.

Fasteners shall be high strength bolts. Bolts 3/4" ø, open holes 13/16" ø unless otherwise noted. Bolts 7/8" ø, open holes 15/16" ø unless otherwise noted.

Calculated weight of Structural Steel = 220,730 lbs.

The Basic Lead Silico Chromate paint system shall be used for shop and field painting of structural steel.

Anchor bolts shall be set before bolting diaphragms over supports.

Slope wall shall be reinforced with welded wire fabric 6" x 6" mesh, weighing 58# per 100 sq. ft. (For Quantity, see Sheet #1 Bill of Material.)

Concrete piles at abutments shall be driven in holes precored through the embankment in accordance with Article 513.09(c) of the Standard Specs.

The embankment configuration shown shall be the minimum embankment that must be constructed prior to construction of the abutments.

The concrete rail section above the mandatory construction joint at the top of the slab shall be constructed of Class X Concrete, except the aggregates shall conform to the requirements of Handrail Concrete.

Protective Coat shall not be applied to surfaces to which Coal Tar Interlayer Protective Coat is applied.

Field welding of construction accessories will not be permitted to the bottom flange of beams and girders nor to the top flange for a distance equal to one-forth the span length each way from the pier supports. Field welding in other areas will be permitted only when approved by the Engineer.

The Contractor shall drive one concrete test pile in a permanent location at the West Abutment, and one Timber test pile in a permanent location at Pier #2 as directed by the Engineer before ordering the remainder of piles.

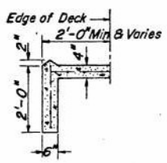

SECTION A-A

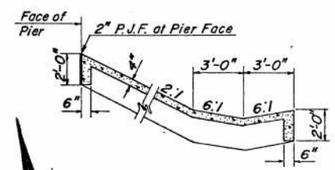

SEC. THRU SLOPEWALL
(For Slopewall Layout, See Sheet #19)

SECTION B-B

STA. EQUATION
~~Sta. 16+93.48-8' Rt. (Ramp "D")~~ =
Sta. 16+55.68 (℄ Rdwy. "B") =
Sta. 25+94.04-12' Rt., (Rdwy. "C")

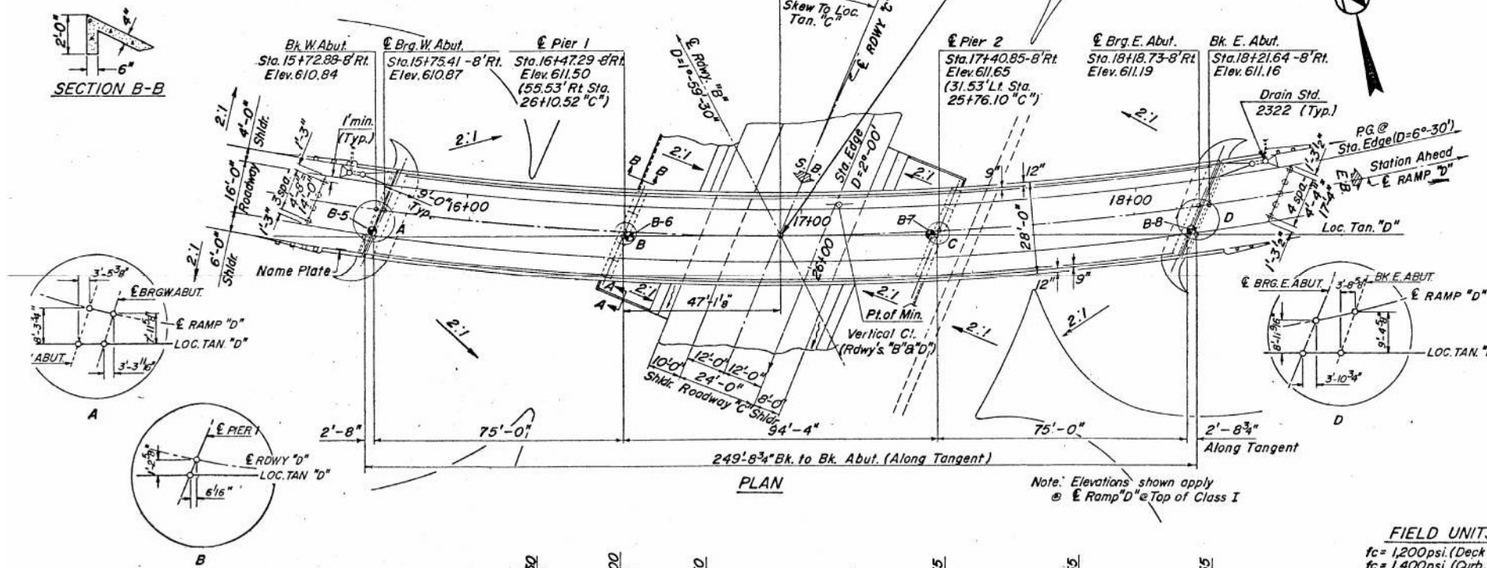

PLAN

Note: Elevations shown apply @ ℄ Ramp "D" @ Top of Class I

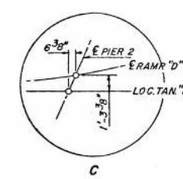

TOTAL BILL OF MATERIALS

	ITEM	UNIT	SUPER	SUB	TOTAL
	Structure Excavation	Cu. Yds.		170	170
**	Protective Coat	Sq. Yds.	215		215
	Class X Concrete	Cu. Yds.	235.3	259.9	495.2
	Structural Steel *	Lump Sum	1		1
	Stud Shear Connectors	Each	2100		2100
	Aluminum Railing	Lin. ft.	546		546
	Creosoted Piles (Over 38')	Lin. ft.		405	405
	Concrete Piles	Lin. ft.		1152	1152
	Test Piles Concrete	Each		1	1
	Test Piles (Timber)	Each		1	1
	Creosoted Piles (20.1' to 38')	Lin. ft.		2130	2130
**	Coal Tar Interlayer Protective Coat	Sq. Yds.	674		674
**	Bituminous Conc. Sur. Crse. Class I	Tons	55		55
	Preformed Joint Sealer	Lin. ft.	30		30
	Neoprene Expansion Joint (2½")	Lin. ft.	32		32
	Name Plate	Each	1		1
	Reinforcement Bars	Lbs.	55,500	35,370	90,870

* Calculated weight of Structural = 220,730 lbs.
** Included in Sec. 54-4

6-80

DESIGNED	D.V.K.
CHECKED	G.E.P.
DRAWN	D.B.
CHECKED	D.V.K.

19
EXAMINED — ENGINEER OF BRIDGE AND TRAFFIC STRUCTURES
PASSED — ENGINEER OF DESIGN
APPROVED — CHIEF HIGHWAY ENGINEER

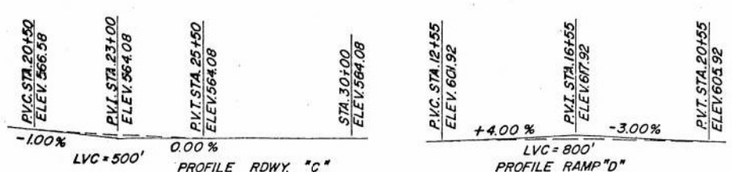

PROFILE RDWY. "C"
(at Lt. edge rdwy.)

PROFILE RAMP "D"
(at Lt. edge rdwy.)

FIELD UNITS
fc = 1,200 psi. (Deck Slab)
fc = 1,400 psi. (Curb, Parapet & Sub.)
fs = 20,000 psi. (Reinf.)
fs = 20,000 psi. (Struct.)
vc = 75 psi. (Ftg.)
n = 10
Allow 25/Sq. Ft. for Initial Class I Surf.
Allowable ⅓ Deflection L/1200 Comp.
Design Specifications 1969 AASHO (as applicable)
Future W.S. = 25/Sq. Ft.

LOADING HS20-44 & ALT.

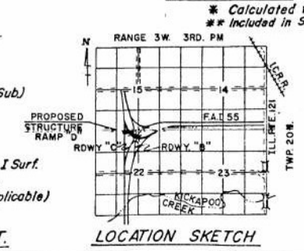

LOCATION SKETCH

GENERAL PLAN & ELEVATION
SUPPL. FREEWAY, E.B., (RAMP "D")
over SUPP'L. FREEWAY, N.B., (RDWY. "B")
over F.A.I. RTE. 55, S.B., (RDWY. "C")
LOGAN COUNTY SEC. 54-4HB
STA. 16+93.48-8' RT., RAMP "D" =
STA. 16+55.68 RDWY. "B" =
STA. 25+94.04-12' RT. RDWY. "C"

FOR INFORMATION ONLY

CDI — CIVIL DESIGN, INC. WBE / DBE — EFFINGHAM, IL — LICENSE #184.003222	USER NAME = $USER$	DESIGNED -	REVISED -
		DRAWN -	REVISED -
	PLOT SCALE = $SCALE$	CHECKED -	REVISED -
	PLOT DATE = 12/19/2024	DATE -	REVISED -

STATE OF ILLINOIS
DEPARTMENT OF TRANSPORTATION

EXISTING PLANS
STRUCTURE NO. 054-0051

SCALE: | SHEET 23 OF 36 SHEETS | STA. | TO STA.

F.A.I. RTE.	SECTION	COUNTY	TOTAL SHEETS	SHEET NO.
155	(54-4HB)D	LOGAN	133	120
		CONTRACT NO. 72220		
		ILLINOIS	FED. AID PROJECT	

MODEL: Default
FILE NAME: P:\Transportation\854 - IDOT PTB 198-023 D6\DWG\CADD 51\054-0051-72220-023-Existing Plans - Copy (1).dgn

ROUTE	SECTION	COUNTY	TOTAL SHEETS	SHEET NO.
F.A. 406	*	LOGAN	133	57

* 54-10-IX,SG

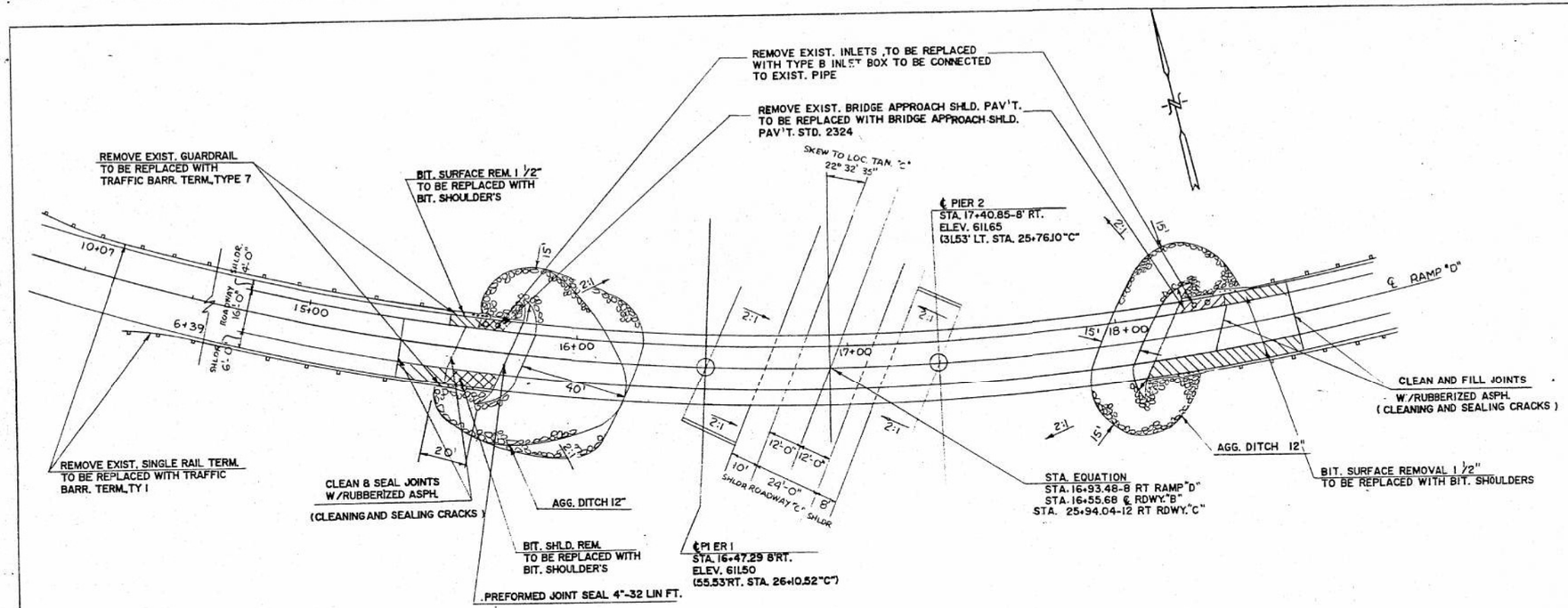

PROPOSED JOINT SEAL DIMENSIONS

STRUCTURE NUMBER	LOCATION	SIZE OF P.J.S. "W"	PLAN DETAIL (CASE)	COMPR. HEIGHT "CH"	1" BAR HEIGHT "1".	STOP BAR SIZE	PROP. OPEN "Wp"
054-0051	W. ABUT.	4	Ia	5.25	—	1/2x1/2	—

"W" = Nominal size of P.J.S.

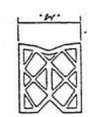

PREFORMED JOINT SEALER

QUANTITIES

ITEM	UNIT	EAST	WEST	TOTAL
INLETS TO BE REMOVED	EACH	2	2	4
TYPE B INLET BOX, STD. 2324	EACH	1	1	2
BRIDGE APPROACH SHOULDR PAVEMENT REMOVAL	SQ.YD.	11	7.1	18.2
P.C.C. BRIDGE APPROACH SHOULDER PAVEMENT	SQ.YD.	11	7.1	18.2
BITUMINOUS SURFACE REMOVAL, 1 1/2"	SQ.YD.	35.6	17.7	53.3
BITUMINOUS SHOULDER REMOVAL	SQ.YD.		13.3	13.3
BITUMINOUS SHOULDERS	TONS	2.2	7.4	9.6
STEEL PLATE BEAM GUARDRAIL REMOVAL	LIN.FT.	—	48	48
TERMINAL REMOVAL, SINGLE RAIL	EACH	—	2	2
TRAFFIC BARRIER TERMINAL, TYPE 1	EACH	—	2	2
TRAFFIC BARRIER TERMINAL, TYPE 7	EACH	—	2	2
AGGREGATE DITCH, 12"	SQ.YD.	61	120	181
CLEANING AND SEALING CRACKS	LIN.FT.	16	17	33
PREFORMED JOINT SEAL 4"	LIN.FT.	—	32	32

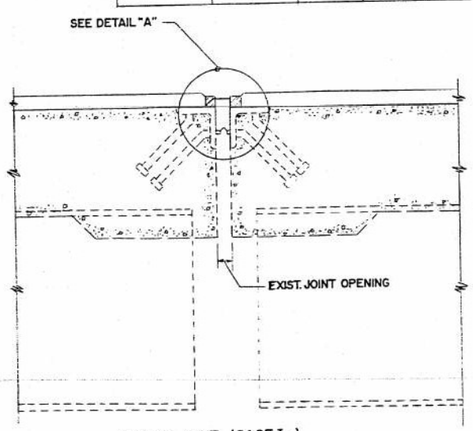

SEC. AT JOINT (CASE I a)

* WHERE THE EXISTING OPENING & L's ARE ADEQUATE FOR THE SPECIFIED P.J.S.

STRUCTURE NO. 054-0051 - WEST ABUTMENT

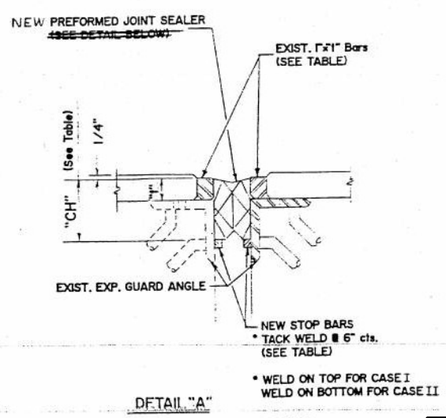

DETAIL "A"

STRUCTURE NO. 054-0051-WEST ABUTMENT

NOTE: SEE CONSTRUCTION DETAIL SHEET (LOWER LEVEL) STR.NO. 054-0050 FOR TYPICAL CLEANING & SEALING CRACKS WITH RUBBERIZED ASPHALT FOR C.R.C. PAVEMENT.

FOR INFORMATION ONLY

UPPER LEVEL RAMP "D"
CONSTRUCTION DETAIL
STR. NO. 054-0051
TRI-LEVEL INTERCHANGE
F.A. 406
SEC. 54-10-IX,SG
LOGAN COUNTY

REVISED 11-14-88

MODEL: Default
FILE NAME: P:\Transportation\4854 - IDOT PTB 198-023 D6\IN\CADD 5\1054-0051-72220-024-Existing Plans - Copy (2).dgn

CDI CIVIL DESIGN, INC. WBE / DBE EFFINGHAM, IL LICENSE #184.003222

USER NAME = $USER$	DESIGNED -	REVISED -	
	DRAWN -	REVISED -	
PLOT SCALE = $SCALE$	CHECKED -	REVISED -	
PLOT DATE = 12/19/2024	DATE -	REVISED -	

STATE OF ILLINOIS
DEPARTMENT OF TRANSPORTATION

EXISTING PLANS
STRUCTURE NO. 054-0051

SCALE: SHEET 24 OF 36 SHEETS STA. TO STA.

F.A.I. RTE.	SECTION	COUNTY	TOTAL SHEETS	SHEET NO.
155	(54-4HB)D	LOGAN	133	121

CONTRACT NO. 72220
ILLINOIS FED. AID PROJECT

STATE OF ILLINOIS

RTE. NO	SEC.	COUNTY	TOTAL SHEETS	SHEET NO.
F.A.I.-55	54-4HB	LOGAN	63	32
FED. ROAD DIST. NO. 7	ILLINOIS	FED. AID PROJECT		

SHEET NO. 19
36 SHEETS

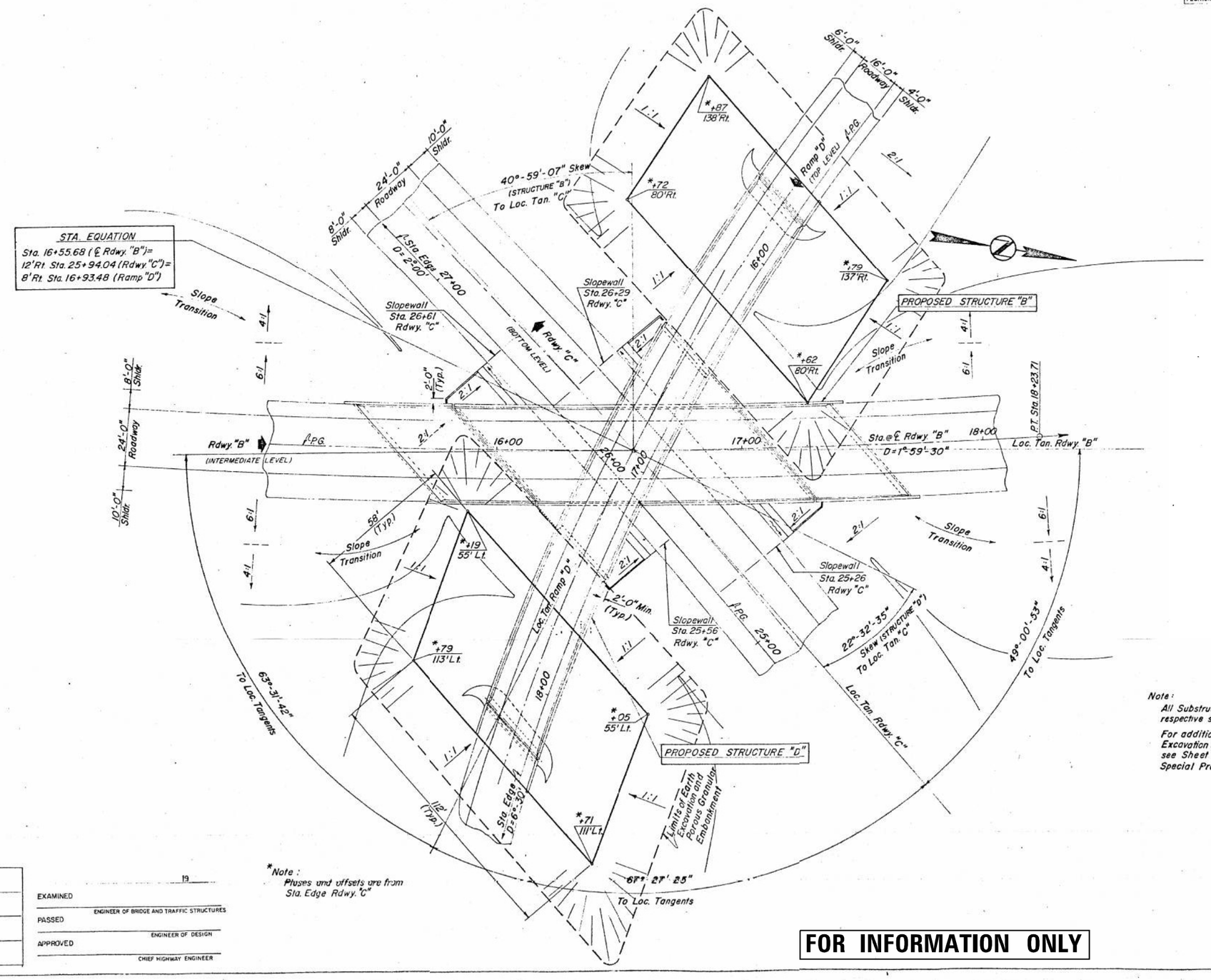

*Note:
Pluses and offsets are from Sta. Edge Rdwy. "C"

Note:
All Substructure elements parallel to their respective skew angles.

For additional information on Earth Excavation and Porous Granular Embankment see Sheet #58 #10 of Roadway Plans & Special Provisions.

DESIGNED	D.V.K.
CHECKED	G.E.P.
DRAWN	D.B.
CHECKED	D.V.K.

EXAMINED _____ 19 _____
ENGINEER OF BRIDGE AND TRAFFIC STRUCTURES
PASSED
ENGINEER OF DESIGN
APPROVED
CHIEF HIGHWAY ENGINEER

FOR INFORMATION ONLY

GENERAL PLAN
SUPP'L. FREEWAY, E.B. (RAMP "D")
SUPP'L. FREEWAY, N.B. (RDWY. "B")
F.A.I. RTE. 55, S.B. (RDWY. "C")
LOGAN COUNTY SEC. 54-4HB
STA. 16+93.48-8' RT., RAMP "D"=
STA. 16+55.68 RDWY. "B"=
STA. 25+94.04-12' RT., RDWY. "C"

MODEL: Default
FILE NAME: P:\Transportation\4654 - IDOT PTB 198-923 D60WO04\CADD S\0054-0051-72220-025-Existing Plans - Copy (3).dgn

CDI
CIVIL DESIGN, INC.
WBE / DBE
EFFINGHAM, IL
LICENSE #184.003222

USER NAME = $USER$	DESIGNED -	REVISED -	
	DRAWN -	REVISED -	
PLOT SCALE = $SCALE$	CHECKED -	REVISED -	
PLOT DATE = 12/19/2024	DATE -	REVISED -	

STATE OF ILLINOIS
DEPARTMENT OF TRANSPORTATION

EXISTING PLANS
STRUCTURE NO. 054-0051

SCALE: | SHEET 25 OF 36 SHEETS | STA. | TO STA.

F.A.I. RTE.	SECTION	COUNTY	TOTAL SHEETS	SHEET NO.
155	(54-4HB)D	LOGAN	133	122
		CONTRACT NO. 72220		
		ILLINOIS	FED. AID PROJECT	

STATE OF ILLINOIS

ROUTE NO.	SECTION	COUNTY	TOTAL SHEETS	SHEET NO.
R.R.L. F.A.I-55	54-4HB	LOGAN	63	33
FED. ROAD DIST. NO. 7		ILLINOIS	FED. AID PROJECT	

SHEET NO. 20
36 SHEETS

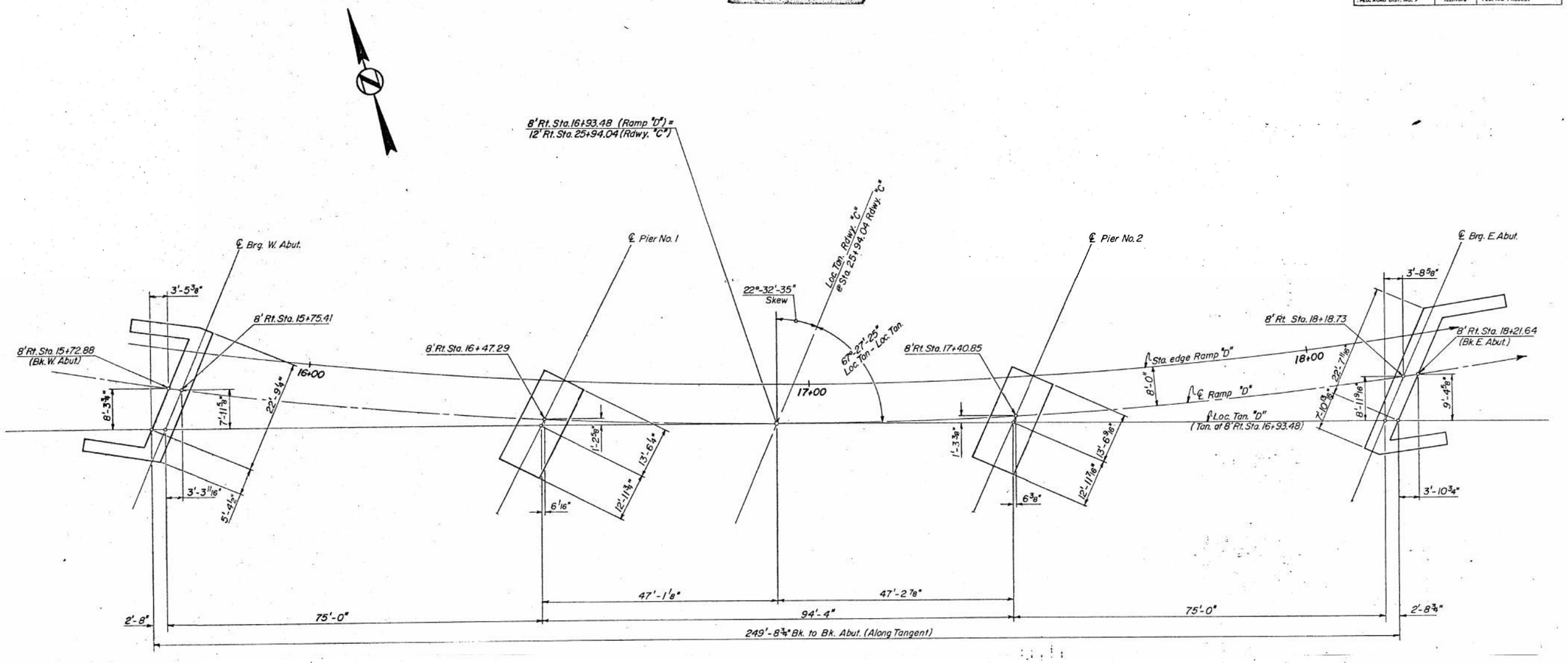

Note:
Substructure Elements are parallel to Loc. Tan. "C"

DESIGNED	D.V.K.
CHECKED	G.E.P.
DRAWN	J.T.
CHECKED	D.V.K.

19

EXAMINED _____ ENGINEER OF BRIDGE AND TRAFFIC STRUCTURES

PASSED _____ ENGINEER OF DESIGN

APPROVED _____ CHIEF HIGHWAY ENGINEER

FOR INFORMATION ONLY

FOOTING LAYOUT
F.A.I-55 SEC. 54-4HB
RAMP "D"
LOGAN COUNTY
STA. 16+93.48

MODEL: Default
FILE NAME: P:\Transportation\4854 - IDOT PPB 198-023 D6.6\DGN\CAD\D-51\054-0051-72220-026-Existing Plans - Copy (4).dgn

CIVIL DESIGN, INC.
WBE / DBE
EFFINGHAM, IL
LICENSE #184.003222

USER NAME = $USER$	DESIGNED -	REVISED -
	DRAWN -	REVISED -
PLOT SCALE = $SCALE$	CHECKED -	REVISED -
PLOT DATE = 12/19/2024	DATE -	REVISED -

STATE OF ILLINOIS
DEPARTMENT OF TRANSPORTATION

EXISTING PLANS
STRUCTURE NO. 054-0051

SCALE: | SHEET 26 OF 36 SHEETS | STA. | TO STA.

F.A.I. RTE.	SECTION	COUNTY	TOTAL SHEETS	SHEET NO.
155	(54-4HB)D	LOGAN	133	123
		CONTRACT NO. 72220		
		ILLINOIS	FED. AID PROJECT	

STATE OF ILLINOIS

[redacted]

ROUTE NO.	SECTION	COUNTY	TOTAL SHEETS	SHEET NO.
S. B. I. F.A.I-55	54-4HB	LOGAN	63	34
FED. ROAD DIST. NO. 7		ILLINOIS	FED. AID PROJECT	

SHEET NO. 21 OF 36 SHEETS

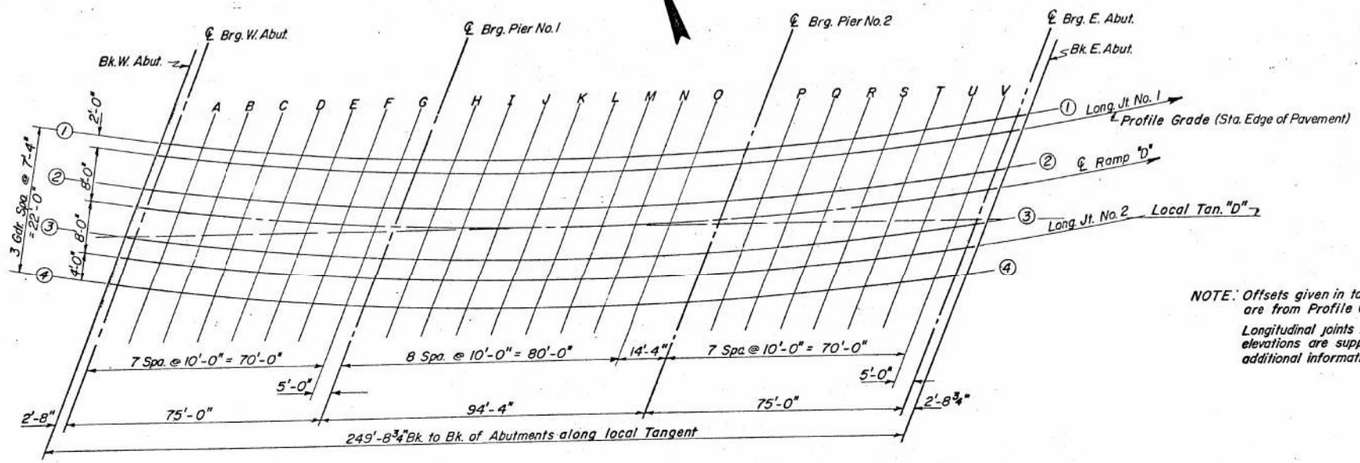

NOTE: Offsets given in tables are from Profile Grade.

Longitudinal joints no's. 1 & 2 elevations are supplied for additional information

PLAN

Location		Station	Offset	Theoretical Grade Elevations	Theoretical Grade Elevations Adjusted For Dead Load Deflection
Bk. W. Abut.	GDR.1	1575.514	-2.000	610.090	610.090
	L.J.1	1574.983	0.000	610.240	610.240
	GDR.2	1573.579	5.334	610.639	610.639
	CENTER	1572.883	8.000	610.839	610.839
	GDR.3	1571.676	12.667	611.188	611.188
	L.J.2	1570.822	16.000	611.437	611.437
	GDR.4	1569.805	20.000	611.737	611.737
℄ Brg. W. Abut.	GDR.1	1578.069	-2.000	610.120	610.120
	L.J.1	1577.532	0.000	610.270	610.270
	GDR.2	1576.111	5.334	610.669	610.669
	CENTER	1575.407	8.000	610.869	610.869
	GDR.3	1574.186	12.667	611.219	611.219
	L.J.2	1573.322	16.000	611.468	611.468
	GDR.4	1572.294	20.000	611.768	611.768
④	GDR.1	1587.669	-2.000	610.229	610.246
	L.J.1	1587.108	0.000	610.379	610.396
	GDR.2	1585.626	5.334	610.779	610.796
	CENTER	1584.891	8.000	610.979	610.996
	GDR.3	1583.617	12.667	611.328	611.345
	L.J.2	1582.715	16.000	611.578	611.595
	GDR.4	1581.642	20.000	611.878	611.895
⑧	GDR.1	1597.298	-2.000	610.330	610.360
	L.J.1	1596.714	0.000	610.480	610.510
	GDR.2	1595.169	5.333	610.880	610.910
	CENTER	1594.403	8.000	611.081	611.111
	GDR.3	1593.075	12.667	611.431	611.461
	L.J.2	1592.136	16.000	611.681	611.711
	GDR.4	1591.018	20.000	611.981	612.011
ⓒ	GDR.1	1606.958	-2.000	610.423	610.457
	L.J.1	1606.350	0.000	610.573	610.607
	GDR.2	1604.742	5.333	610.974	611.008
	CENTER	1603.945	8.000	611.175	611.209
	GDR.3	1602.563	12.667	611.526	611.560
	L.J.2	1601.585	16.000	611.776	611.810
	GDR.4	1600.422	20.000	612.077	612.111
ⓓ	GDR.1	1616.550	-2.000	610.508	610.538
	L.J.1	1616.018	0.000	610.659	610.689
	GDR.2	1614.346	5.333	611.061	611.091
	CENTER	1613.518	8.000	611.262	611.292
	GDR.3	1612.082	12.667	611.613	611.643
	L.J.2	1611.065	16.000	611.864	611.894
	GDR.4	1609.856	20.000	612.166	612.196
ⓔ	GDR.1	1626.377	-2.000	610.585	610.604
	L.J.1	1625.720	0.000	610.736	610.755
	GDR.2	1623.984	5.333	611.139	611.158
	CENTER	1623.124	8.000	611.340	611.359
	GDR.3	1621.632	12.667	611.693	611.712
	L.J.2	1620.576	16.000	611.944	611.963
	GDR.4	1619.321	20.000	612.246	612.265
ⓕ	GDR.1	1636.138	-2.000	610.654	610.661
	L.J.1	1635.457	0.000	610.806	610.813
	GDR.2	1633.655	5.333	611.209	611.216
	CENTER	1632.763	8.000	611.411	611.418
	GDR.3	1631.216	12.667	611.765	611.772
	L.J.2	1630.121	16.000	612.017	612.024
	GDR.4	1628.818	20.000	612.320	612.327
ⓖ	GDR.1	1645.936	-2.000	610.715	610.715
	L.J.1	1645.230	0.000	610.867	610.867
	GDR.2	1643.363	5.333	611.272	611.272
	CENTER	1642.439	8.000	611.474	611.474
	GDR.3	1640.835	12.667	611.829	611.829
	L.J.2	1639.700	16.000	612.082	612.082
	GDR.4	1638.350	20.000	612.385	612.385

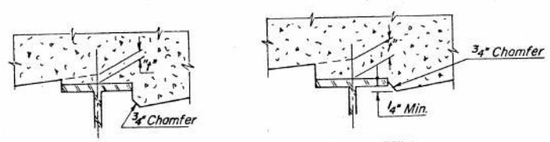

To determine "t": After all structural steel has been erected, elevations of the top flanges of the beams shall be taken at intervals shown above. These elevations subtracted from the "Theoretical Grade Elevations Adjusted for Dead Load Deflection" shown below, minus slab thickness and 1½" Class "I", equals the fillet heights "t" above top flange of beams.

FILLET HEIGHTS

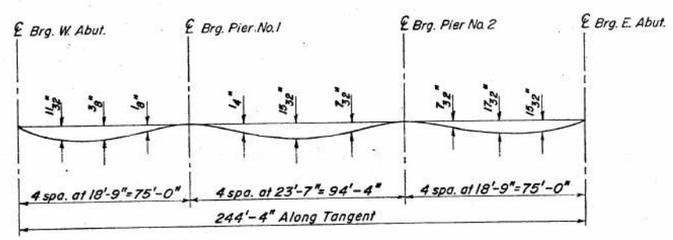

DEAD LOAD DEFLECTION DIAGRAM

(Includes weight of concrete and Class "I")

Note: The above deflections are not to be used in the field if the engineer is working from the grade elevations adjusted for dead load deflections as shown.

TOP OF CLASS "I" ELEVATIONS
F.A.I.-55 SEC. 54-4HB
RAMP "D"
LOGAN COUNTY
STA. 16+93.48

FOR INFORMATION ONLY

DESIGNED	D.V.K.
CHECKED	G.E.P.
DRAWN	J.J.T.
CHECKED	D.V.K.

19

EXAMINED

ENGINEER OF BRIDGES & TRAFFIC STRUCTURES

PASSED

ENGINEER OF DESIGN

APPROVED

CHIEF HIGHWAY ENGINEER

MODEL: Default
FILE NAME: P:\Transportation\4854 - IDOT PTB 198-093 D6\0\0\CADD 51\054-0051-72220-027-Existing Plans - Copy (3).dgn

CDI
CIVIL DESIGN, INC.
WBE / DBE
EFFINGHAM, IL
LICENSE #184.003222

USER NAME = $USER$	DESIGNED -	REVISED -	
	DRAWN -	REVISED -	
PLOT SCALE = $SCALE$	CHECKED -	REVISED -	
PLOT DATE = 12/19/2024	DATE -	REVISED -	

STATE OF ILLINOIS
DEPARTMENT OF TRANSPORTATION

EXISTING PLANS
STRUCTURE NO. 054-0051

SCALE: | SHEET 27 OF 36 SHEETS | STA. | TO STA.

F.A.I. RTE.	SECTION	COUNTY	TOTAL SHEETS	SHEET NO.
155	(54-4HB)D	LOGAN	133	124
		CONTRACT NO. 72220		
		ILLINOIS	FED. AID PROJECT	

STATE OF ILLINOIS

ROUTE NO.	SECTION	COUNTY	TOTAL SHEETS	SHEET NO.
S.B.L. F.A.I-55	54-4HB	LOGAN	63	36
FED. ROAD DIST. NO. 7		ILLINOIS	FED. AID PROJECT	

SHEET NO. 23
36 SHEETS

Note:
Bars indicated thus 20x3-#5 etc. indicates 20 lines of bars with 3 lengths per line.
Min. bar laps = 24 dia.

Dimensions are along inside of parapet

Spacing of the $a_1, a_2, a_{10}, a_{11}, a_{12}, a_{13}, d, d_1$, and d_{10} bars are along ℄ of Roadway

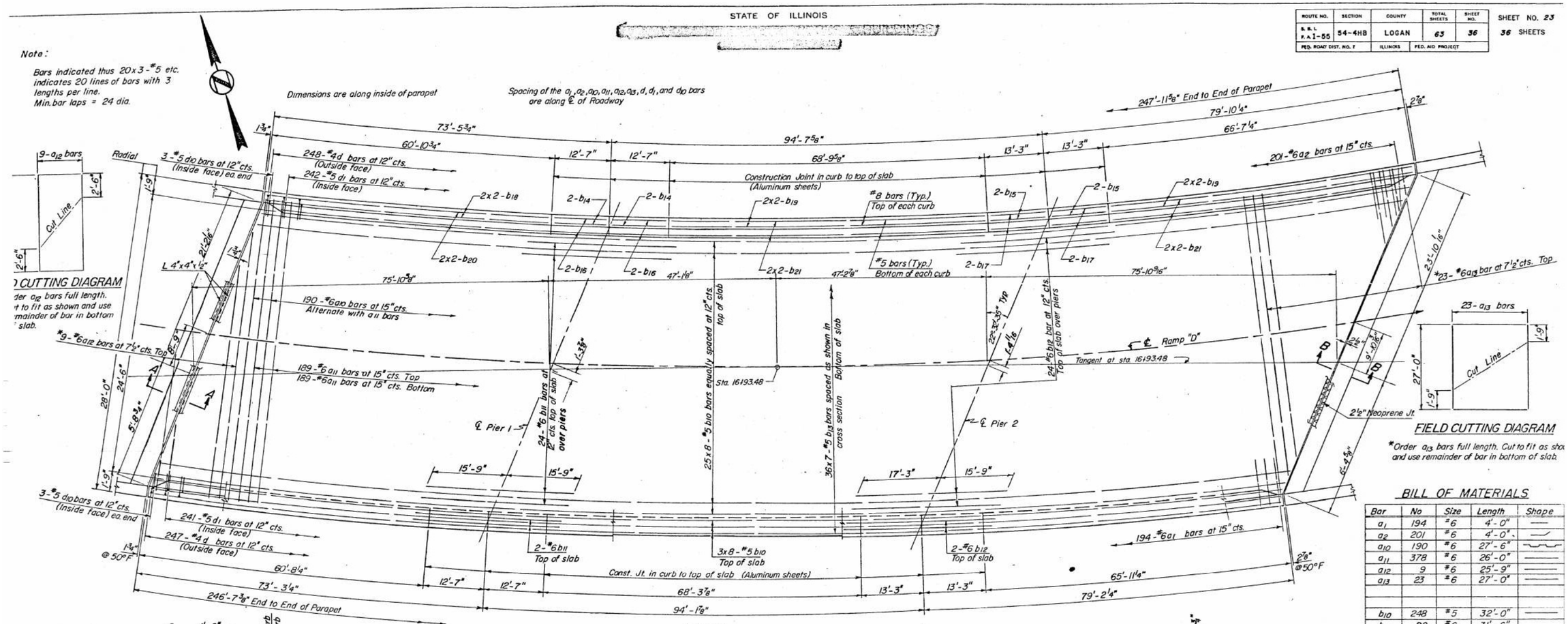

PLAN

FIELD CUTTING DIAGRAM

*Order a_{13} bars full length. Cut to fit as shown and use remainder of bar in bottom of slab.

CUTTING DIAGRAM

Order a_{12} bars full length. Cut to fit as shown and use remainder of bar in bottom of slab.

BILL OF MATERIALS

Bar	No	Size	Length	Shape
a_1	194	#6	4'-0"	
a_2	201	#6	4'-0"	
a_{10}	190	#6	27'-6"	
a_{11}	378	#6	26'-0"	
a_{12}	9	#6	25'-9"	
a_{13}	23	#6	27'-0"	
b_{10}	248	#5	32'-0"	
b_{11}	28	#6	31'-6"	
b_{12}	28	#6	33'-0"	
b_{13}	252	#5	36'-5"	
b_{14}	8	#8	12'-3"	
b_{15}	8	#8	13'-0"	
b_{16}	8	#5	12'-3"	
b_{17}	8	#5	13'-0"	
b_{18}	8	#8	31'-4"	
b_{19}	16	#8	35'-3"	
b_{20}	8	#5	31'-0"	
b_{21}	16	#5	34'-10"	
d	495	#4	4'-8"	
d_1	483	#5	3'-8"	
d_{10}	12	#5	3'-6"	
Class X Concrete			Cu. Yds.	216.9
Reinforcement Bars			Lbs.	54030
Preformed Joint Sealer			Lin. Ft.	30
Neoprene Exp Joint 2½"			Lin. Ft.	32

NOTE: Cost of Aluminum Sheets shall be incidental to Class X Concrete

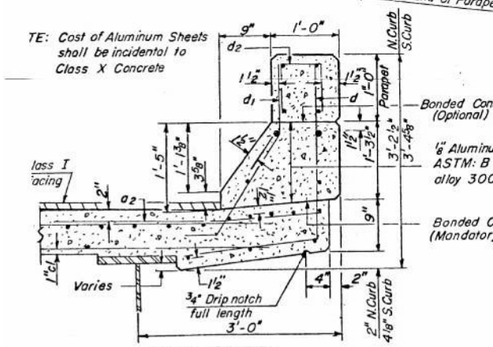

CURB SECTION

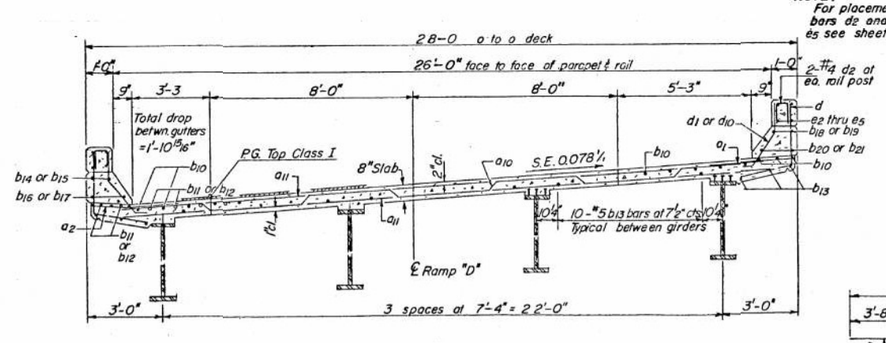

NEAR PIERS

NEAR MIDSPAN

CROSS SECTION
Looking East

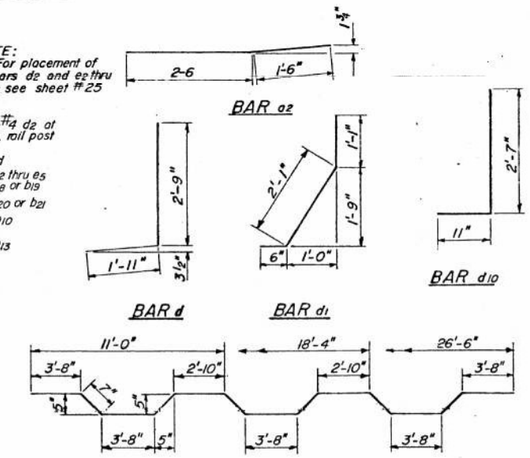

NOTE: For placement of bars d2 and e2 thru e5 see sheet #25

FOR INFORMATION ONLY

SUPERSTRUCTURE
F.A.I. 55 SEC. 54-4HB
RAMP "D"
LOGAN COUNTY
STA. 16+93.48

DESIGNED	D.V.K.	EXAMINED	19
CHECKED	D.E.P.		ENGINEER OF BRIDGE AND TRAFFIC STRUCTURES
DRAWN	E.S.	PASSED	ENGINEER OF DESIGN
CHECKED	D.V.K.	APPROVED	CHIEF HIGHWAY ENGINEER

MODEL: Default
FILE NAME: P:\Transportation\4854 - IDOT PTB 198-023 D6\IDOT\CAD\D_51\054-0051-72220-028-Existing Plans - Copy (6).dgn

CDI
CIVIL DESIGN, INC.
WBE / DBE
EFFINGHAM, IL
LICENSE #184.003222

USER NAME = $USER$	DESIGNED -	REVISED -	
	DRAWN -	REVISED -	
PLOT SCALE = $SCALE$	CHECKED -	REVISED -	
PLOT DATE = 12/19/2024	DATE -	REVISED -	

STATE OF ILLINOIS
DEPARTMENT OF TRANSPORTATION

EXISTING PLANS
STRUCTURE NO. 054-0051

SCALE: | SHEET 28 OF 36 SHEETS | STA. | TO STA.

F.A.I. RTE.	SECTION	COUNTY	TOTAL SHEETS	SHEET NO.
155	(54-4HB)D	LOGAN	133	125
		CONTRACT NO. 72220		
		ILLINOIS	FED. AID PROJECT	

STATE OF ILLINOIS

ROUTE NO.	SECTION	COUNTY	TOTAL SHEETS	SHEET NO.
S.B.I. F.A.I-55	54-4HB	LOGAN	63	38
FED. ROAD DIST. NO. 7		ILLINOIS	FED. AID PROJECT	

SHEET NO. 25
36 SHEETS

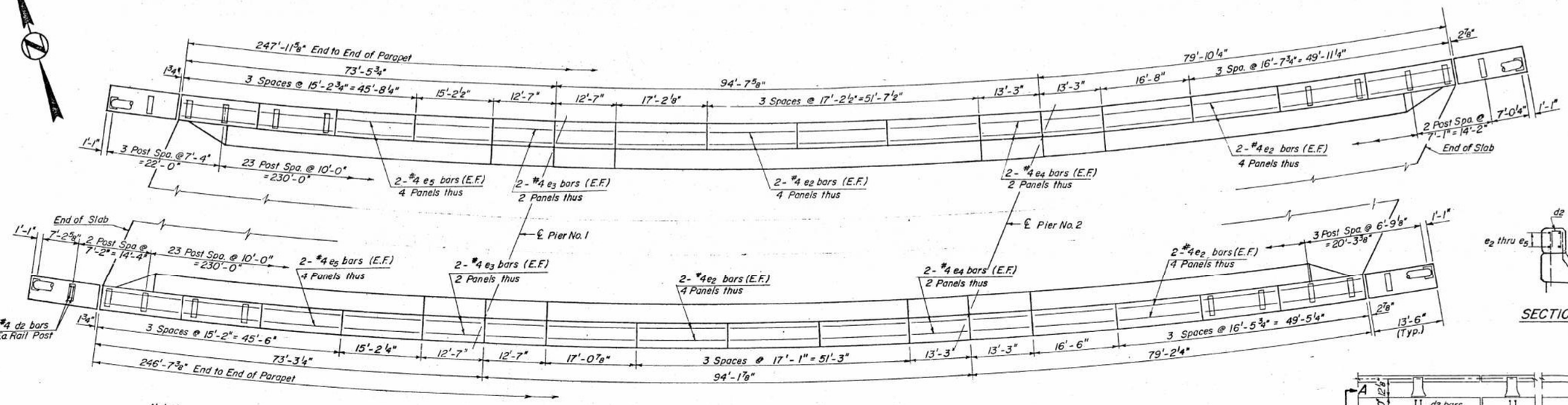

Note:
Dimensions are along inside face of parapet

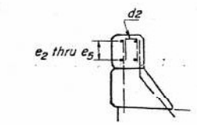

SECTION A-A

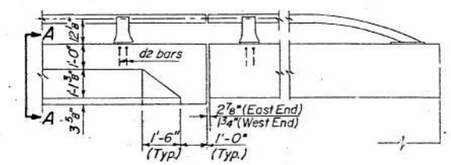

TYPICAL END OF CURB AND RAIL

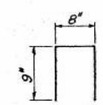

BAR d2

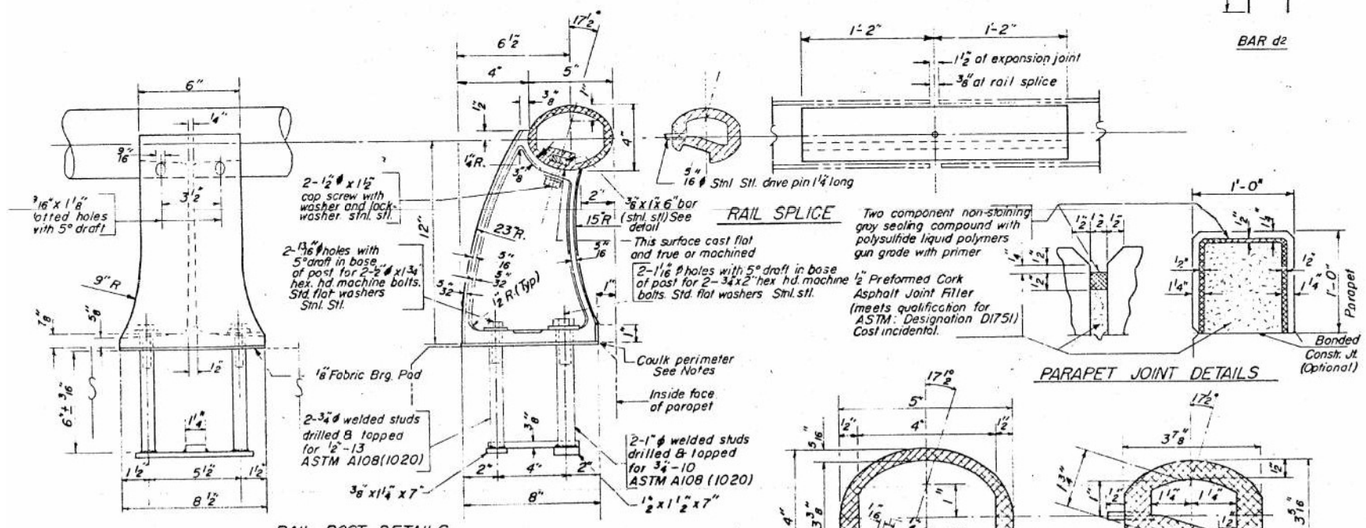

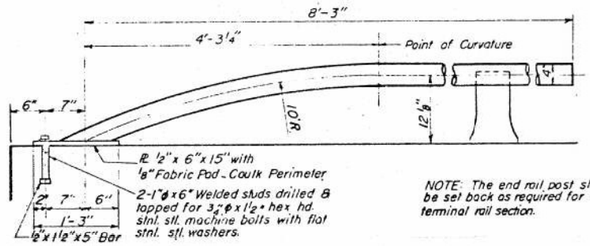

NOTE: The end rail post shall be set back as required for the terminal rail section.

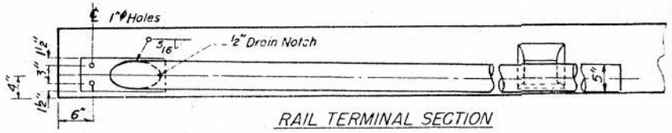

RAIL TERMINAL SECTION

PARAPET & RAILS
BILL OF MATERIAL

Bar	No.	Size	Length	Shape
e2	64	# 4	16'-9"	
e3	16	# 4	12'-3"	
e4	16	# 4	13'-0"	
e5	32	# 4	15'-0"	
d2	112	# 4	2'-2"	
Reinforcement Bars			Lbs.	1470
Class X Concrete			Cu. Yds.	18.4
Aluminum Railing			Lin. Ft.	546

NOTES:

All Aluminum Alloy Extruded Rail shall be supplied in modular lengths of 30 feet except at the end of bridge or over open joints in bridge deck where the rail shall be attached to a minimum of 2 posts. If the rail is on a horizontal curve of 2300 foot radius or less, the modular lengths may be reduced but shall be attached to a minimum of 2 posts.

All joints in rail shall be spliced per detail.

Provide 1-⅛ and 2-1/16 Aluminum Shims for 25% of the posts. Rail element shall be parallel to Grade — high spots shall be ground and low spots shimmed.

Seal perimeter of base of post to parapet with two component non-staining gray sealing compound with polysulfide liquid polymers, gun grade with primer. Fabric Bearing Pad shall have same dimensions as base of post.

Aluminum alloy rail shall conform to ASTM B 221 alloy 6061-T6 or 6351-T5 with min. yield 35 ksi, min tensile 38 ksi, and elongation of 10% in 2 inches

FOR INFORMATION ONLY

ALUMINUM RAILING
F.A.I.-55 SEC. 54-4HB
RAMP "D"
LOGAN COUNTY
STA. 16+93.48

DESIGNED	D.V.K.
CHECKED	G.E.P.
DRAWN	J.J.T.
CHECKED	D.V.K.

EXAMINED
ENGINEER OF BRIDGE AND TRAFFIC STRUCTURES
PASSED
ENGINEER OF DESIGN
APPROVED
CHIEF HIGHWAY ENGINEER

CIVIL DESIGN, INC.
WBE / DBE
EFFINGHAM, IL
LICENSE #184.003222

USER NAME = $USER$	DESIGNED -	REVISED -
	DRAWN -	REVISED -
PLOT SCALE = $SCALE$	CHECKED -	REVISED -
PLOT DATE = 12/19/2024	DATE -	REVISED -

STATE OF ILLINOIS
DEPARTMENT OF TRANSPORTATION

EXISTING PLANS
STRUCTURE NO. 054-0051

SCALE: SHEET 29 OF 36 SHEETS STA. TO STA.

F.A.I. RTE.	SECTION	COUNTY	TOTAL SHEETS	SHEET NO.
155	(54-4HB)D	LOGAN	133	126
		CONTRACT NO. 72220		
		ILLINOIS FED. AID PROJECT		

MODEL: Default
FILE NAME: P:\Transportation\4854 - IDOT PTB 198-023 D600\04\CADD-S\054-0051-72220-079-Existing Plans - Copy (7).dgn

STATE OF ILLINOIS

[redacted]

ROUTE NO.	SECTION	COUNTY	TOTAL SHEETS	SHEET NO.
S. B. I. F.A.I-55	54-4HB	LOGAN	63	39
FED. ROAD DIST. NO. 7		ILLINOIS	FED. AID PROJECT	

SHEET NO. 2
36 SHEETS

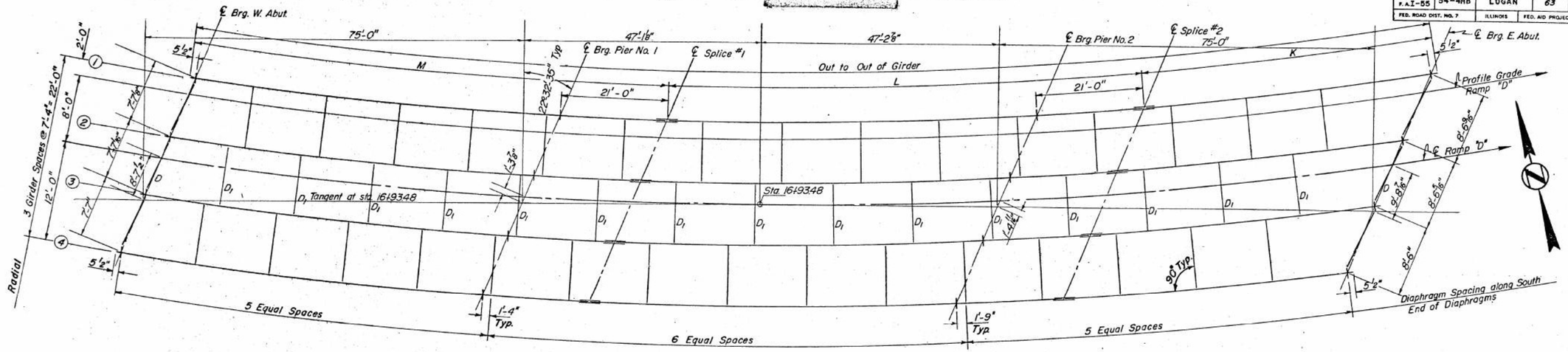

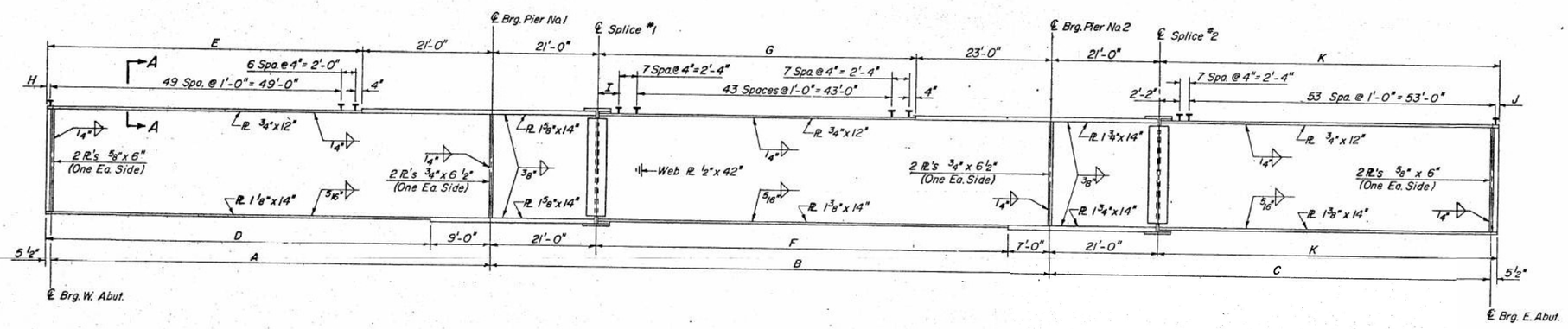

TABLE OF DIMENSIONS				
	Girder 1	Girder 2	Girder 3	Girder 4
Radius	879.47'	886.80'	894.13	901.47
A	72'-7 3/8"	72'-6 11/16"	72'-6"	72'-5 3/16"
B	94'-7 1/8"	94'-5 7/16"	94'-3 13/16"	94'-2 1/4"
C	78'-10 3/16"	78'-7 9/16"	78'-5 1/16"	78'-3 1/2"
D	64'-0 7/8"	64'-0 3/16"	63'-11 1/2"	63'-10 13/16"
E	52"-0 7/8"	52'-0 3/16"	51'-11 1/2"	51'-10 13/16"
F	66'-7 1/8"	66'-5 7/16"	66'-3 9/16"	66'-2 1/4"
G	50'-7 1/8"	50'-5 7/16"	50'-3 13/16"	50'-2 1/4"
H	8 7/8"	8 3/16"	7 1/2"	6 13/16"
I	2'-7 1/8"	2'-5 7/16"	2'-3 13/16"	2'-2 1/4"
J	9 11/16"	7 7/16"	5 13/16"	3"
K	58'-3 11/16"	58'-1 7/16"	57'-11 3/16"	57'-9"
L	94'-7 1/8"	94'-5 7/16"	94'-3 9/16"	94'-2 1/4"
M	94'-0 7/8"	94'-0 3/16"	93'-11 1/2"	93'-10 13/16"
Total a/a	246'-11 11/16"	246'-7 1/16"	246'-2 1/2"	245'-10 1/16"

DESIGNED	D.V.K.
CHECKED	G.E.P.
DRAWN	J.J.T.
CHECKED	D.V.K.

19
EXAMINED
ENGINEER OF BRIDGE AND TRAFFIC STRUCTURES
PASSED
ENGINEER OF DESIGN
APPROVED
CHIEF HIGHWAY ENGINEER

FOR INFORMATION ONLY

STRUCTURAL STEEL
F.A.I.-55 SEC. 54-4HB
RDWY. "D"
LOGAN COUNTY
STA. 16+93.48

MODEL: Default
FILE NAME: P:\Transportation\4854 - IDOT PTB 198-023 D60W04\CADD S\054-0051-72220-030-Existing Plans - Copy (8).dgn

CDI
CIVIL DESIGN, INC.
WBE / DBE
EFFINGHAM, IL
LICENSE #184.003222

USER NAME = $USER$	DESIGNED -	REVISED -
	DRAWN -	REVISED -
PLOT SCALE = $SCALE$	CHECKED -	REVISED -
PLOT DATE = 12/19/2024	DATE -	REVISED -

STATE OF ILLINOIS
DEPARTMENT OF TRANSPORTATION

EXISTING PLANS
STRUCTURE NO. 054-0051

SCALE: | SHEET 30 OF 36 SHEETS | STA. | TO STA.

F.A.I. RTE.	SECTION	COUNTY	TOTAL SHEETS	SHEET NO.
155	(54-4HB)D	LOGAN	133	127
		CONTRACT NO. 72220		
		ILLINOIS	FED. AID PROJECT	

STATE OF ILLINOIS

[redacted]

ROUTE NO.	SECTION	COUNTY	TOTAL SHEETS	SHEET NO.
S. R. L. F. A.I-55	54-4HB	LOGAN	63	40
FED. ROAD DIST. NO. 7		ILLINOIS	FED. AID PROJECT	

SHEET NO. 27
36 SHEETS

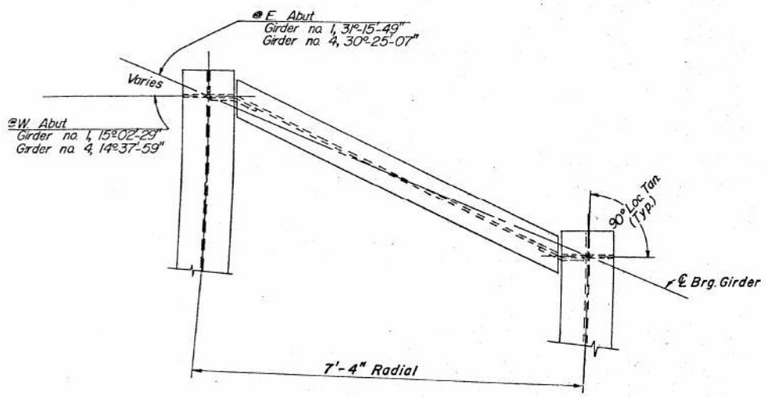

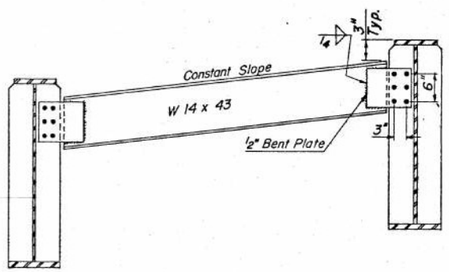

DIAPHRAGM D
6 Req'd

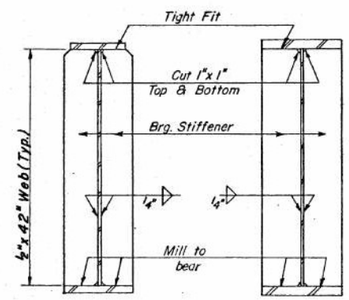

SECTION AT ABUTMENT

SECTION AT PIER

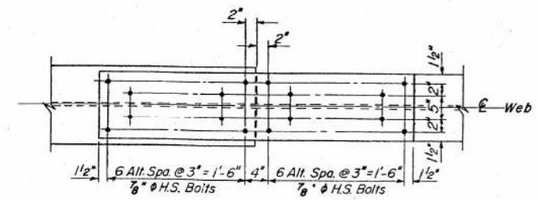

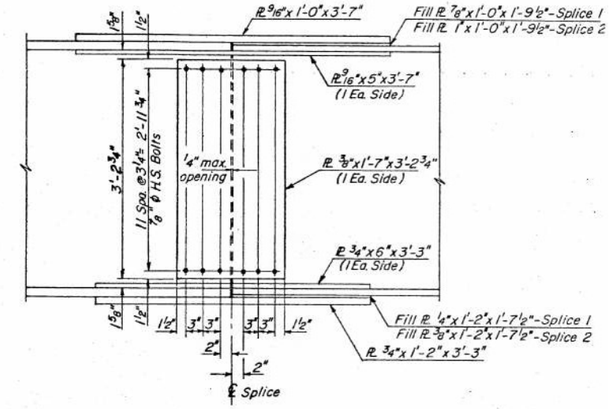

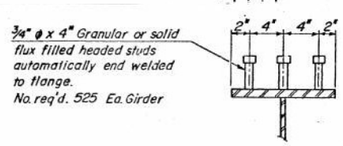

SECTION A-A

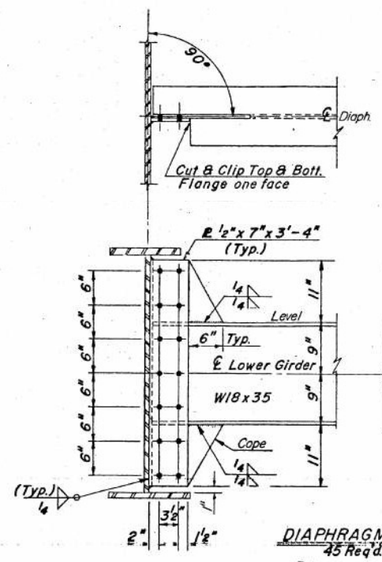

DIAPHRAGM D1
45 Req'd.
7/8" H.S. Bolts

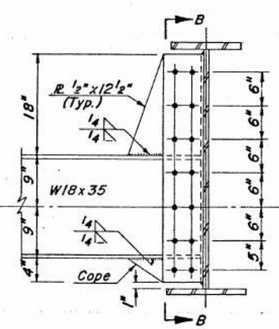

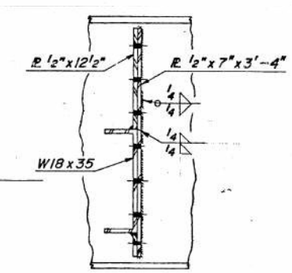

VIEW B-B

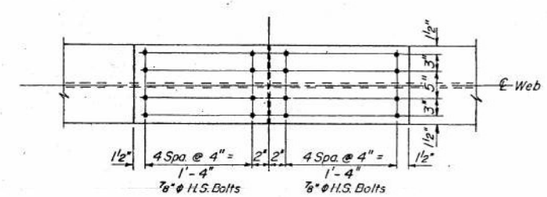

SPLICE #1 & #2

DESIGNED	D.V.K.
CHECKED	G.E.P.
DRAWN	J.J.T.
CHECKED	D.V.K.

19

EXAMINED — ENGINEER OF BRIDGE AND TRAFFIC STRUCTURES

PASSED — ENGINEER OF DESIGN

APPROVED — CHIEF HIGHWAY ENGINEER

FOR INFORMATION ONLY

STRUCTURAL STEEL DETAILS
F.A.I.-55 SEC. 54-4HB
RDWY. "D"
LOGAN COUNTY
STA. 16+93.48

MODEL: Default
FILE NAME: P:\Transportation\454 - IDOT PTB 198-023 D6\0\0\CADD 5\1054-0051-72220-031-Existing Plans - Copy (9).dgn

CDI — CIVIL DESIGN, INC. WBE / DBE — EFFINGHAM, IL — LICENSE #184.003222

USER NAME = $USER$	DESIGNED -	REVISED -
	DRAWN -	REVISED -
PLOT SCALE = $SCALE$	CHECKED -	REVISED -
PLOT DATE = 12/19/2024	DATE -	REVISED -

STATE OF ILLINOIS
DEPARTMENT OF TRANSPORTATION

EXISTING PLANS
STRUCTURE NO. 054-0051

SCALE: | SHEET 31 OF 36 SHEETS | STA. | TO STA.

F.A.I. RTE.	SECTION	COUNTY	TOTAL SHEETS	SHEET NO.
155	(54-4HB)D	LOGAN	133	128
		CONTRACT NO. 72220		
		ILLINOIS	FED. AID PROJECT	

STATE OF ILLINOIS

I-55	54-4HB	LOGAN	63	41

SHEET NO. 28
36 SHEETS

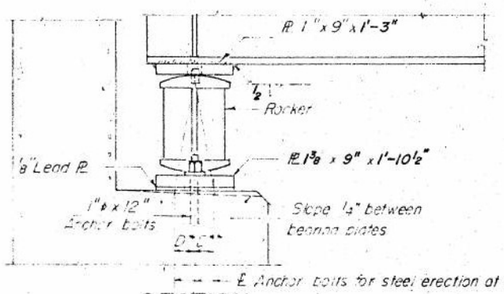

SECTION

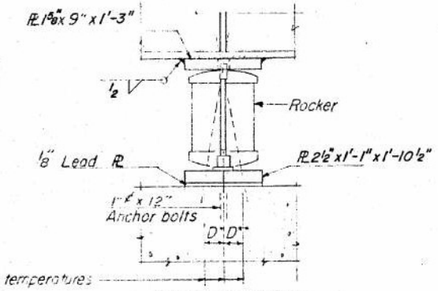

ELEVATION

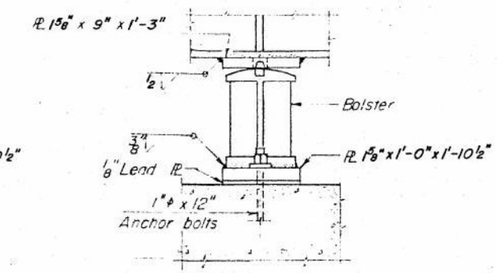

ELEVATION

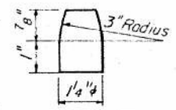

PINTLE

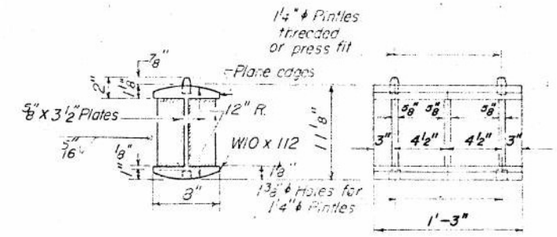

ROCKER

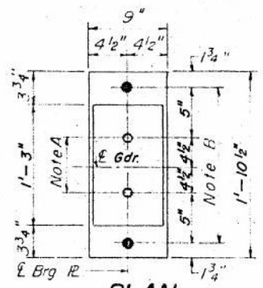

PLAN

AT ABUTMENTS

NOTE A

1 3/8" ϕ Holes -- 1" deep in top PL for pintles. Thread or press fit pintles into bottom PL.

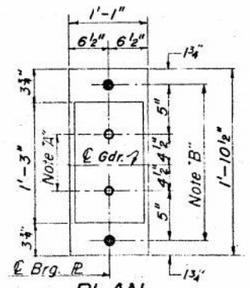

PLAN

AT PIER 2

NOTE B

1 1/2" ϕ Holes for 1" ϕ anchor bolts 2 1/2" x 2 1/2" x 5/16" PL Washers under nut.

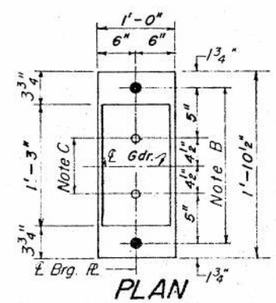

PLAN

AT PIER 1

NOTE C

1 3/8" ϕ Holes 1" deep in top PL only for 1 1/4" ϕ pintles.

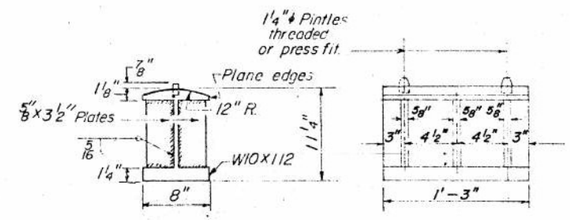

BOLSTER

BEARING ASSEMBLY DETAILS

NOTES ON SETTING OF ANCHOR BOLTS AT EXP. BRGS.

a) D* (Side of brg. away from fixed brg.)
D* = 1/8" per each 100' of expansion for every 15° fall below the normal temp of 50°F.
D** (Side of brg. toward fixed brg.)
D** = 1/8" per each 100' of expansion for every 15° rise above the normal temp of 50°F.

b) After beams have been erected and dimensions D* or D** determined, holes shall be drilled and anchor bolts shall be grouted in place. All fixed anchor bolts may be built into the masonry.

EXTERIOR GIRDER MOMENT TABLE					
	0.4 Sp. 1	Pier 1	0.5 Sp.2	Pier 2	0.4 Sp.3
Is (in.4)	14,050	24,745	15,228	26,547	15,228
Ss(in3)	743.1	1093.7	855.3	1166.9	855.3
Q (k/1)	.895	.971	.907	.984	.907
MQ ('k)	288.6	699.1	272.3	791.5	356.4
fsQ (Ksi)	4.66	7.67	3.82	8.14	5.00
Ic(n=30)(in4)	27,192	———	29,966	———	29,966
Ss(in3)	946.5	———	1086.1	———	1086.1
SQ (k/1)	.532	.532	.532	.532	.532
MsQ (k)	204.3	327.2	193.9	358.8	194.6
fs SQ (ksi)	2.59	3.59	2.72	3.69	2.73
Ic(n=10)(in4)	37,695	———	42,244	———	42,244
Sc(in3)	1033.7	———	1185.2	———	1185.2
ML ('k)	538.8	422.9	611.2	456.1	602.5
MIMP('k)	135.7	101.2	139.4	107.9	148.1
ML+I (k)	674.5	524.1	750.6	564.0	750.6
fsL+I(ksi)	7.83	5.75	7.60	5.80	7.60
fs (pri)tot(ksi)	15.08	17.01	14.14	17.63	15.33
fs (sec)tot(ksi)	3.21	2.30	3.31	2.59	3.67
fs total (ksi)	18.29	19.31	17.45	20.22	19.00
VR (k)	55	- ———	47	———	57

EXTERIOR GIRDER REACTION TABLE				
	W. Abut.	Pier 1	Pier 2	E. Abut.
RQ (k)	37.64	134.53	142.59	41.79
RL (k)	39.00	54.88	56.56	39.93
RI (k)	9.83	13.14	13.38	9.82
R total (pri.)(k)	86.47	202.55	212.53	91.54
R total(sec.) (k)	1.43	.54	.65	1.97
R total (k)	87.90	203.09	213.18	93.51

I_S and S_S are the moment of inertia and section modulus of the steel section.

I_C and S_C are the moment of inertia and section modulus of the composite section used in computing fs.

VR is the maximum L + Impact shear range in span.

Stresses and Reactions include allowance for Secondary and Torsional Loads.

*TOP OF WEB ELEVATIONS				
Location / Girder No.	1	2	3	4
℄ Brg. W. Abut.	609.22	609.77	610.32	610.87
℄ Pier No. 1	609.70	610.26	610.83	611.41
℄ Splice 1	609.84	610.40	610.97	611.56
℄ Pier No. 2	609.79	610.37	610.96	611.55
℄ Splice 2	609.78	610.36	610.95	611.54
℄ Brg. E. Abut.	609.46	610.07	610.68	611.29

*For fabrication only

DESIGNED	D.V.K.
CHECKED	G.E.P.
DRAWN	J.T.
CHECKED	D.V.K.

19
EXAMINED
ENGINEER OF BRIDGE AND TRAFFIC STRUCTURES
PASSED
ENGINEER OF BRIDGE
APPROVED
CHIEF HIGHWAY ENGINEER

FOR INFORMATION ONLY

BEARING DETAILS
F.A.I.-55 SEC.54-4HB
RDWY. "D"
LOGAN COUNTY
STA. 16+93.48

MODEL: Default
FILE NAME: P:\Transportation\4854 - IDOT PTB 198-023 D60W04\CADD S\054-0051-72220-032-Existing Plans - Copy (10).dgn

CDI CIVIL DESIGN, INC. WBE / DBE EFFINGHAM, IL LICENSE #184.003222

USER NAME = $USER$	DESIGNED -	REVISED -
	DRAWN -	REVISED -
PLOT SCALE = $$SCALE$	CHECKED -	REVISED -
PLOT DATE = 12/19/2024	DATE -	REVISED -

STATE OF ILLINOIS
DEPARTMENT OF TRANSPORTATION

EXISTING PLANS
STRUCTURE NO. 054-0051

SCALE: | SHEET 32 OF 36 SHEETS | STA. | TO STA.

F.A.I. RTE.	SECTION	COUNTY	TOTAL SHEETS	SHEET NO.
155	(54-4HB)D	LOGAN	133	129
		CONTRACT NO. 72220		
		ILLINOIS	FED. AID PROJECT	

STATE OF ILLINOIS

ROUTE NO.	SECTION	COUNTY	TOTAL SHEETS	SHEET NO.
S.B.I. F.A.I-55	54-4HB	LOGAN	63	42
FED. ROAD DIST. NO. 7		ILLINOIS	FED. AID PROJECT	

SHEET NO. 29
36 SHEETS

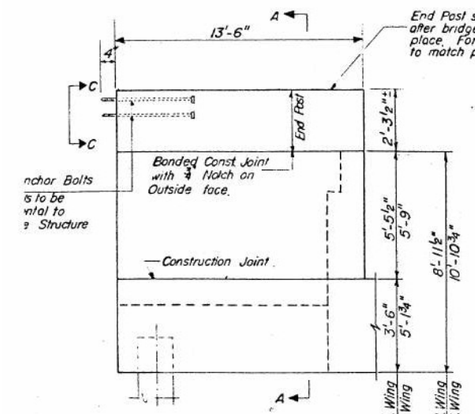

WING WALL ELEVATION

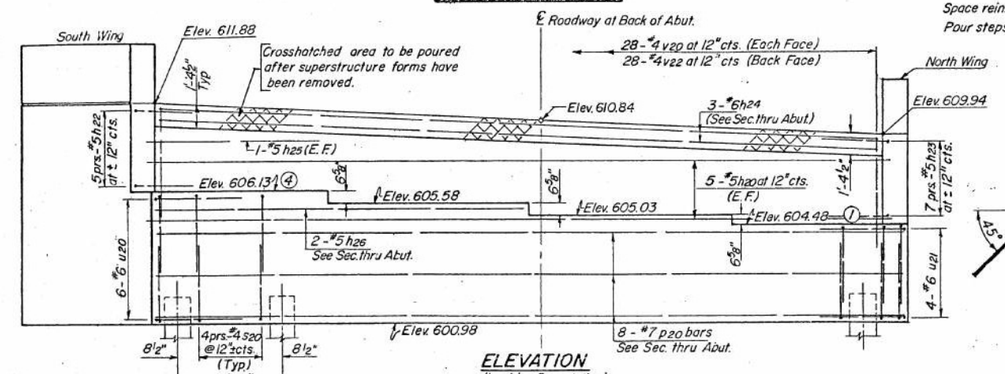

ELEVATION
(Looking Downstation)

Space reinforcement in cap to miss anchor bolts.
Pour steps monolithically with cap.

Locate 2" ϕ Galv. Conduit (Sch. 40 Pipe) ±12" inside of fascia beam web and parallel to beam line. Extend to clear the wing wall and terminate at a point outside of shoulder. Thread and cap each end. Cost Incidental.

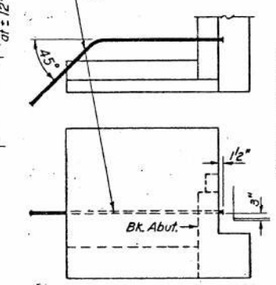

ELECTRICAL CONDUIT LOCATION
(Pile Bent Abutments)

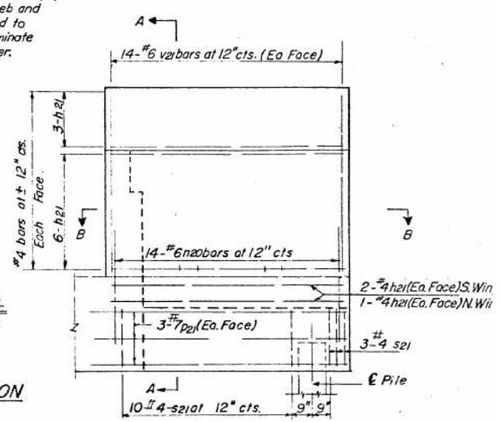

WING WALL ELEVATION
Reinforcement

PILE DATA

Type = Concrete
Capacity = 40 Tons
No. Req'd. = 8 and 1 Test Pile
Length = 72'

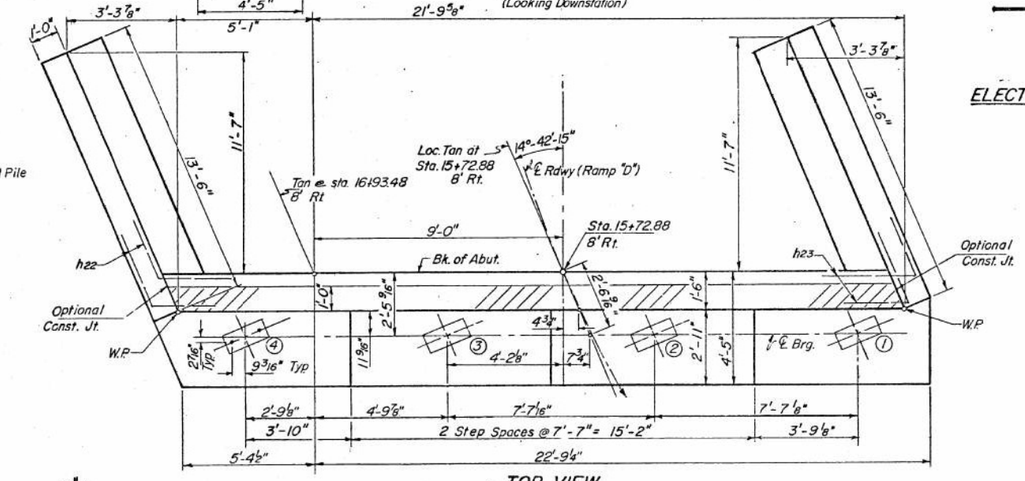

TOP VIEW

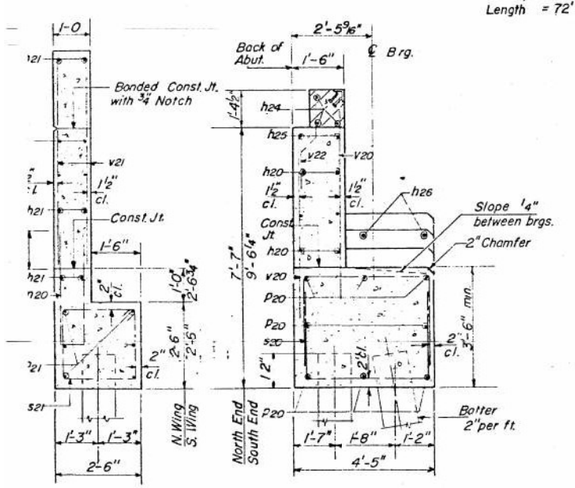

SEC. A-A

SEC. THRU ABUT.

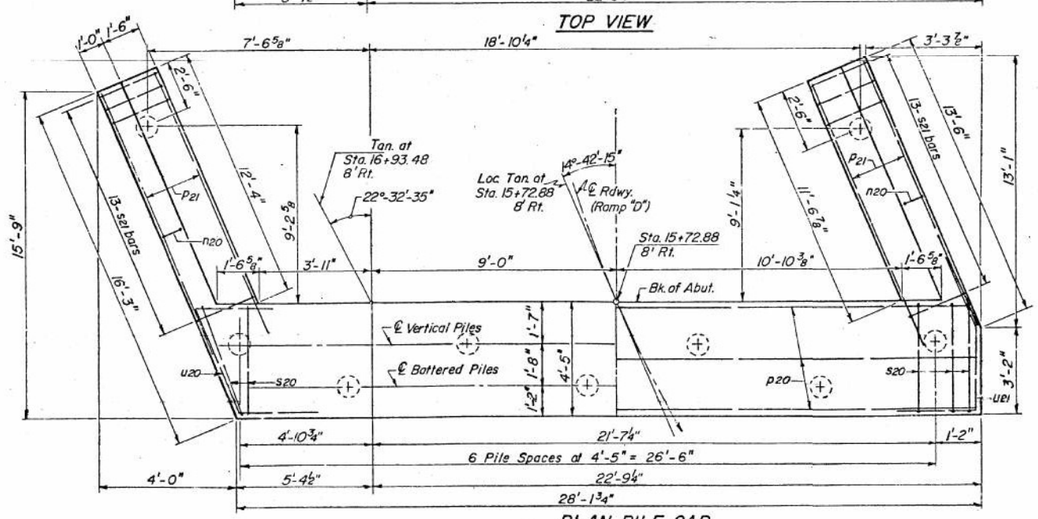

PLAN PILE CAP

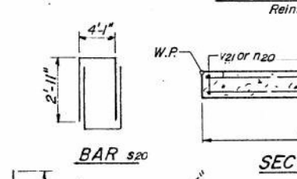

BAR s20

SECTION B-B

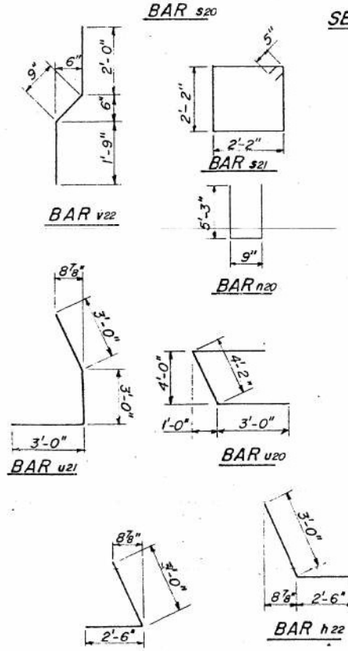

ONE ABUTMENT BILL OF MATERIAL

Bar	No	Size	Length	Shape
h20	10	#5	26'-6"	
h21	42	#4	13'-3"	
h22	10	#5	5'-6"	
h23	14	#5	5'-6"	
h24	3	#6	26'-6"	
h25	2	#5	9'-3"	
h26	2	#5	13'-9"	
n20	28	#6	11'-3"	
p20	8	#7	27'-10"	
p21	12	#7	13'-3"	
s20	54	#4	9'-11"	
s21	26	#4	9'-6	
u20	6	#6	10'-2"	
u21	4	#6	9'-0"	
v20	56	#4	7'-0"	
v21	56	#6	7'-6"	
v22	28	#4	4'-6"	
Class X Concrete			Cu. Yds.	35.8
Reinforcement Bars			Lbs.	3850
Concrete Piles			Lin. Ft.	576
Test Piles (Concrete)			Ea.	1

WEST ABUTMENT
F.A.I. 55 SEC. 54-4HB
RAMP "D"
LOGAN COUNTY
STA. 16+93.48

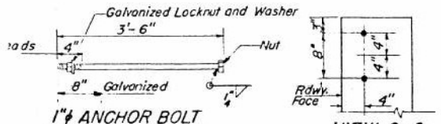

1"ϕ ANCHOR BOLT

VIEW C-C

DESIGNED	D.V.K.	EXAMINED	
CHECKED	G.E.P.	PASSED	ENGINEER OF BRIDGE AND TRAFFIC STRUCTURES
DRAWN	E-S	APPROVED	ENGINEER OF DESIGN
CHECKED	D.V.K.		CHIEF HIGHWAY ENGINEER

19

FOR INFORMATION ONLY

MODEL: Default
FILE NAME: P:\Transportation\4854 - IDOT PTB 198-023 D6\IDOT\CADD\51054-0051-72220-033-Existing Plans - Copy (1).dgn

CDI
CIVIL DESIGN, INC.
WBE / DBE
EFFINGHAM, IL
LICENSE #184.003222

USER NAME = $USER$	DESIGNED -	REVISED -	
	DRAWN -	REVISED -	
PLOT SCALE = $SCALE$	CHECKED -	REVISED -	
PLOT DATE = 12/19/2024	DATE -	REVISED -	

STATE OF ILLINOIS
DEPARTMENT OF TRANSPORTATION

EXISTING PLANS
STRUCTURE NO. 054-0051

SCALE: SHEET 33 OF 36 SHEETS STA. TO STA.

F.A.I. RTE.	SECTION	COUNTY	TOTAL SHEETS	SHEET NO.
155	(54-4HB)D	LOGAN	133	130
		CONTRACT NO. 72220		
		ILLINOIS	FED. AID PROJECT	

STATE OF ILLINOIS

ROUTE NO.	SECTION	COUNTY	TOTAL SHEETS	SHEET NO.
S.B.I. F.A.I-55	54-4HB	LOGAN	63	43
FED. ROAD DIST. NO. 7		ILLINOIS	FED. AID PROJECT	

SHEET NO. 30
36 SHEETS

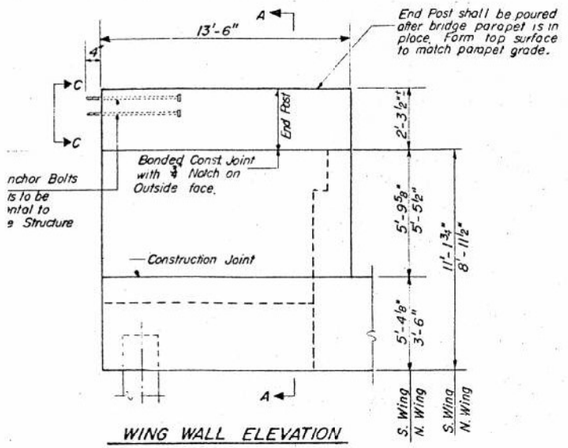

WING WALL ELEVATION

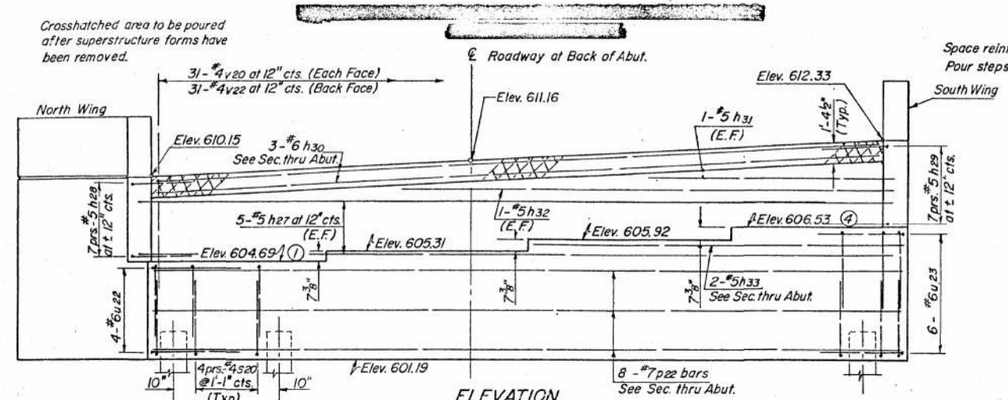

ELEVATION
(Looking Upstation)

Space reinforcement in cap to miss anchor bolts. Pour steps monolithically with cap.

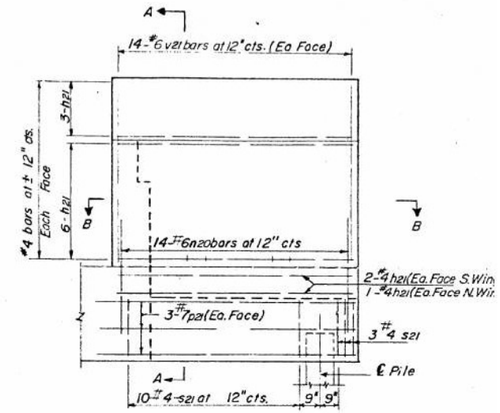

WING WALL ELEVATION
Reinforcement

PILE DATA

Type = Concrete
Capacity = 40 Tons
No. Req'd = 9
Length = 64'

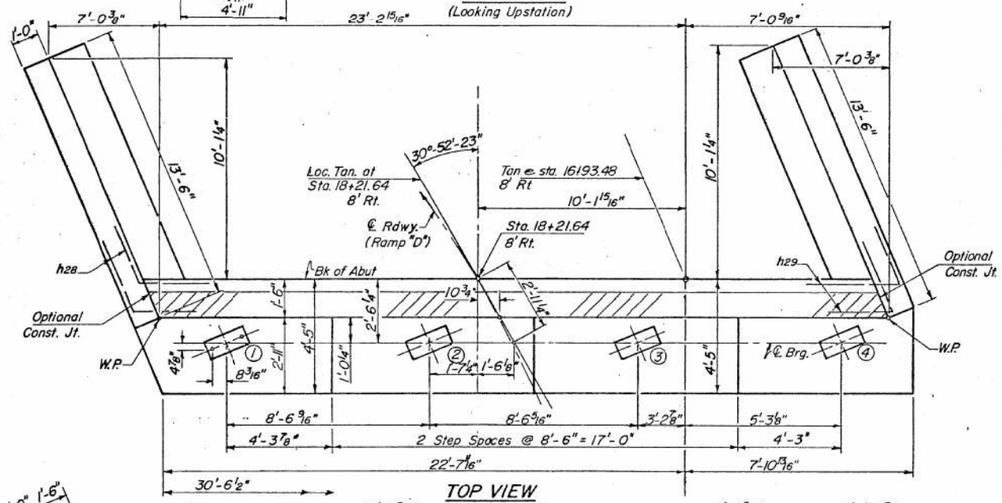

TOP VIEW

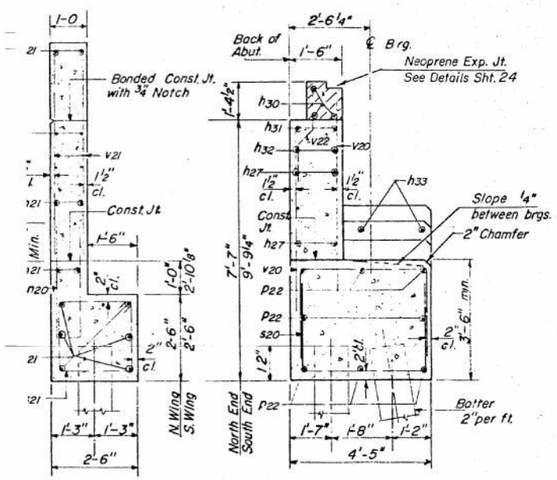

SEC. A-A

SEC. THRU ABUT.

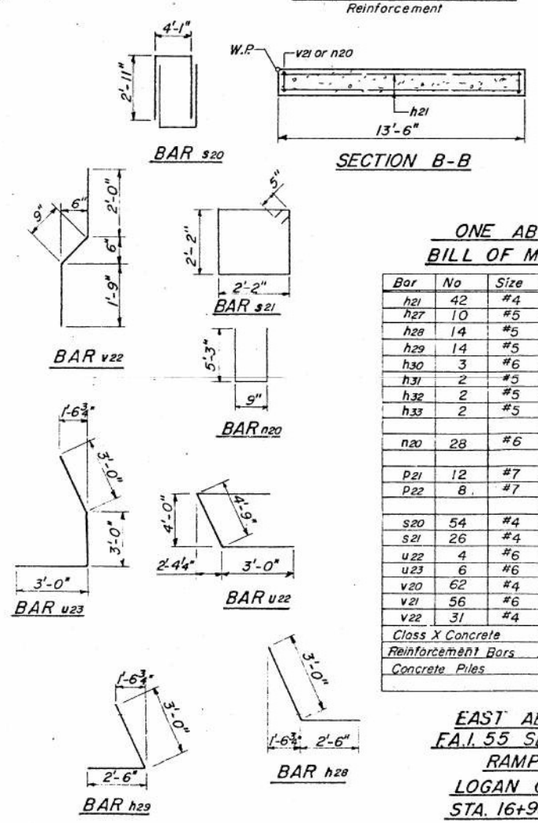

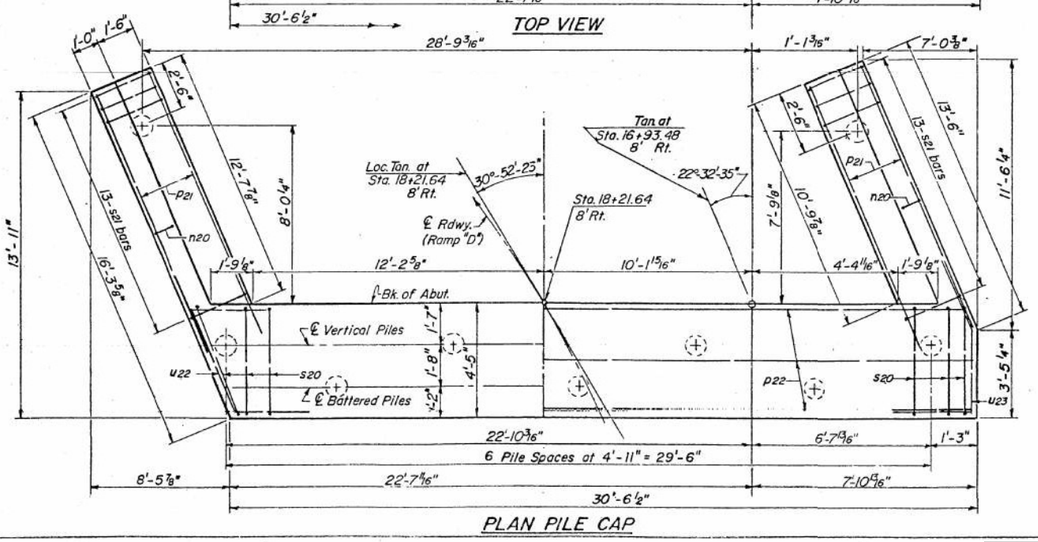

PLAN PILE CAP

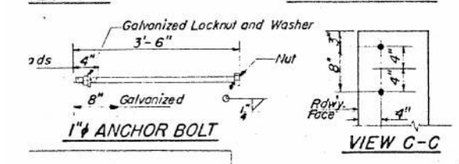

1"ϕ ANCHOR BOLT

VIEW C-C

ONE ABUTMENT BILL OF MATERIAL

Bar	No	Size	Length	Shape
h21	42	#4	13'-3"	
h27	10	#5	30'-0"	
h28	14	#5	5'-6"	
h29	14	#5	5'-6"	
h30	3	#6	29'-2"	
h31	2	#5	10'-0"	
h32	2	#5	20'-0"	
h33	2	#5	15'-0"	
n20	28	#6	11'-3"	
p21	12	#7	13'-3"	
p22	8	#7	30'-3"	
s20	54	#4	9'-11"	
s21	26	#4	9'-6"	
u22	4	#6	10'-9"	
u23	6	#6	9'-0"	
v20	62	#4	7'-0"	
v21	56	#6	7'-6"	
v22	31	#4	4'-6"	
Class X Concrete			Cu. Yds.	44.3
Reinforcement Bars			Lbs.	4050
Concrete Piles			Lin. Ft.	576

EAST ABUTMENT
F.A.I. 55 SEC. 54-4HB
RAMP "D"
LOGAN COUNTY
STA. 16+93.48

DESIGNED	D.V.K.
CHECKED	G.E.P.
DRAWN	E-S
CHECKED	D.V.K.

19

EXAMINED
PASSED — ENGINEER OF BRIDGE AND TRAFFIC STRUCTURES
APPROVED — ENGINEER OF DESIGN
CHIEF HIGHWAY ENGINEER

FOR INFORMATION ONLY

CDI — CIVIL DESIGN, INC. WBE / DBE — EFFINGHAM, IL — LICENSE #184.003222

USER NAME = $USER$	DESIGNED -	REVISED -	
	DRAWN -	REVISED -	
PLOT SCALE = $SCALE$	CHECKED -	REVISED -	
PLOT DATE = 12/19/2024	DATE -	REVISED -	

STATE OF ILLINOIS
DEPARTMENT OF TRANSPORTATION

EXISTING PLANS
STRUCTURE NO. 054-0051

SCALE: | SHEET 34 OF 36 SHEETS | STA. | TO STA.

F.A.I. RTE.	SECTION	COUNTY	TOTAL SHEETS	SHEET NO.
155	(54-4HB)D	LOGAN	133	131
		CONTRACT NO. 72220		
		ILLINOIS	FED. AID PROJECT	

MODEL: Default
FILE NAME: P:\Transportation\4854 - IDOT PTB 198-023 06\WOA\CADD_S\1054-0051-72220-034-Existing Plans - Copy (12).dgn

STATE OF ILLINOIS

ROUTE NO.	SECTION	COUNTY	TOTAL SHEETS	SHEET NO.
S.B.I.L. F.A. I-55	54-4HB	LOGAN	63	44
FED. ROAD DIST. NO. 7		ILLINOIS	FED. AID PROJECT	

SHEET NO. 31
36 SHEETS

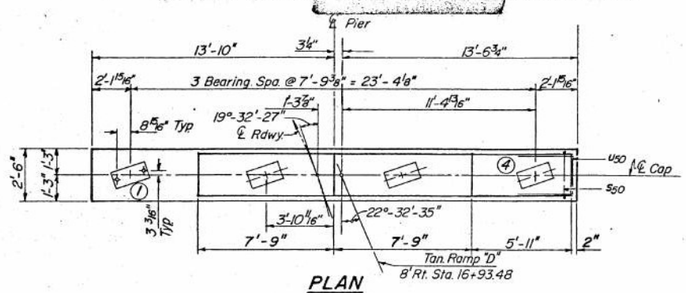

PLAN

Note:

Space reinforcement in cap to miss anchor bolts.
Min. bar laps = 24 dia. unless otherwise noted
All edges shall have standard ¾" chamfers except as noted.
Four steps monolithically with cap.

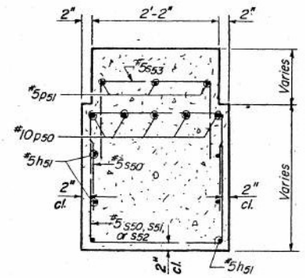

SECTION A-A

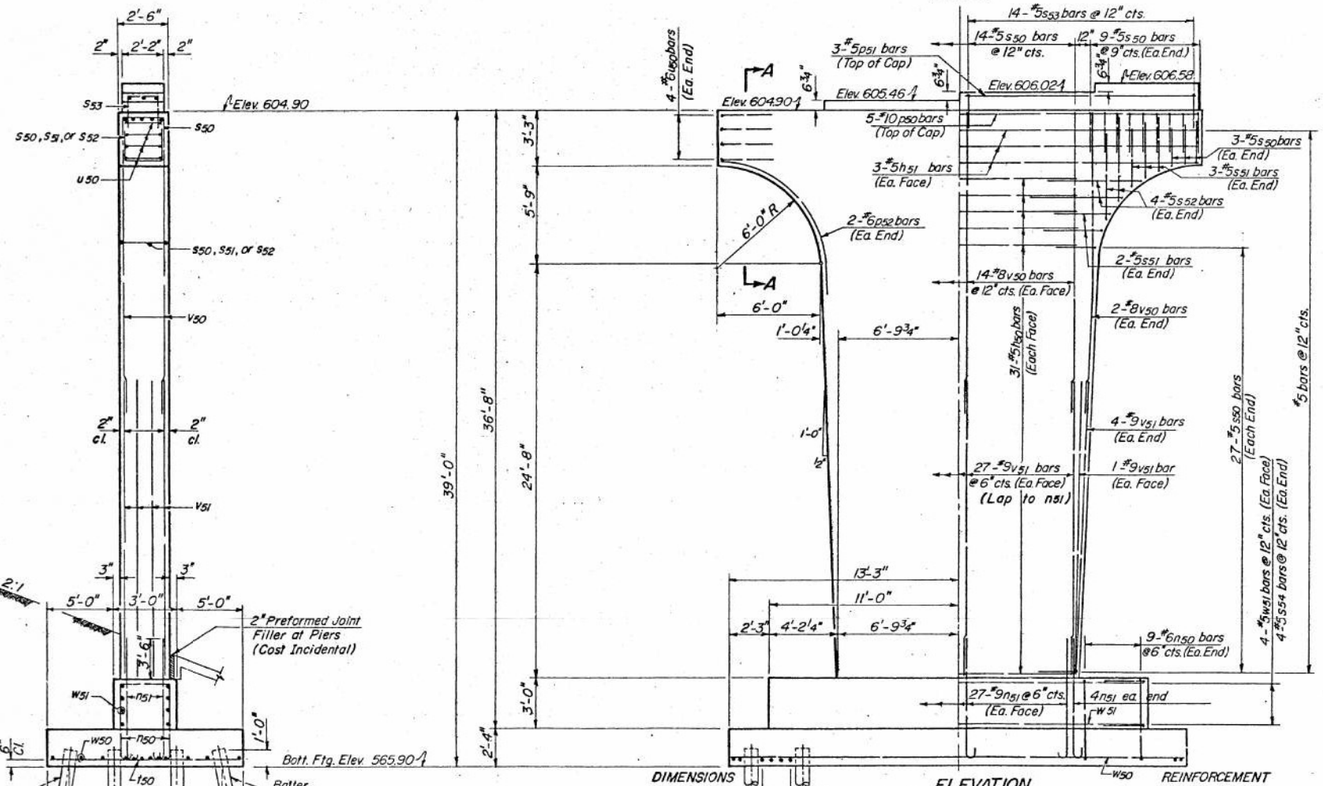

END VIEW

FOOTING PLAN

PILE DATA

Type = Timber
Capacity = 24 Tons
Est. Length = 30'
No. Req'd = 36

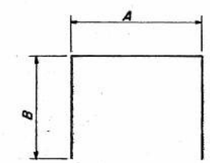

A & B DIMENSIONS

Bar	A	B
s50	2'-2"	2'-4"
s51	2'-2"	3'-3"
s52	2'-2"	5'-3"
s53	1'-10"	2'-0"
s54	2'-8"	2'-6"

s BARS

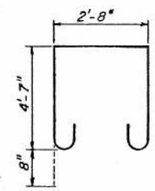

n50 BAR

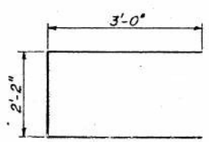

u50 BAR

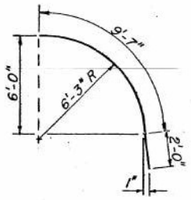

p52 BAR

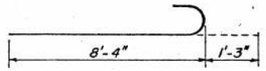

n51 BAR

PIER 1
BILL OF MATERIAL

Bar	No.	Size	Length	Shape
h50	62	#5	13'-4"	—
h51	6	#5	27'-4"	—
n50	18	#6	13'-2"	
n51	62	#9	9'-7"	
p50	5	#10	27'-4"	—
p51	3	#5	13'-4"	—
p52	4	#6	11'-7"	
s50	92	#5	6'-10"	
s51	10	#5	8'-8"	
s52	8	#5	12'-8"	
s53	14	#5	5'-10"	
s54	8	#5	7'-8"	
t50	36	#10	12'-9"	—
u50	8	#6	8'-2"	
v50	32	#8	17'-10"	—
v51	66	#9	18'-6"	—
w50	12	#10	26'-3"	—
w51	8	#5	21'-8"	—
Class X Concrete			Cu.Yds.	90.5
Reinforcement Bars			Lbs.	14,390
Creosoted Timber Piles			Lin. Ft.	1080

DESIGNED	D.V.K.	
CHECKED	G.E.P.	
DRAWN	J.T.	
CHECKED	D.V.K.	

19
EXAMINED — ENGINEER OF BRIDGE AND TRAFFIC STRUCTURES
PASSED — ENGINEER OF DESIGN
APPROVED — CHIEF HIGHWAY ENGINEER

PIER NO. 1
F.A.I. 55 SEC. 54-4HB
RAMP "D"
LOGAN COUNTY
STA. 16+93.48

FOR INFORMATION ONLY

MODEL: Default
FILE NAME: P:\Transportation\4854 - IDOT PTB 198-023 D6.6\WD\CAD\D-51\054-0051-72220-035-Existing Plans - Copy (13).dgn

CDI — CIVIL DESIGN, INC. WBE / DBE — EFFINGHAM, IL — LICENSE #184.003222

USER NAME = $USER$	DESIGNED -	REVISED -
	DRAWN -	REVISED -
PLOT SCALE = $SCALE$	CHECKED -	REVISED -
PLOT DATE = 12/19/2024	DATE -	REVISED -

STATE OF ILLINOIS
DEPARTMENT OF TRANSPORTATION

EXISTING PLANS
STRUCTURE NO. 054-0051

SCALE: | SHEET 35 OF 36 SHEETS | STA. | TO STA.

F.A.I. RTE.	SECTION	COUNTY	TOTAL SHEETS	SHEET NO.
155	(54-4HB)D	LOGAN	133	132
		CONTRACT NO. 72220		
		ILLINOIS	FED. AID PROJECT	

STATE OF ILLINOIS

ROUTE NO.	SECTION	COUNTY	TOTAL SHEETS	SHEET NO.
S.B.I. F.A.I-55	54-4HB	LOGAN	63	45
FED. ROAD DIST. NO. 7		ILLINOIS	FED. AID PROJECT	

SHEET NO. 32
36 SHEETS

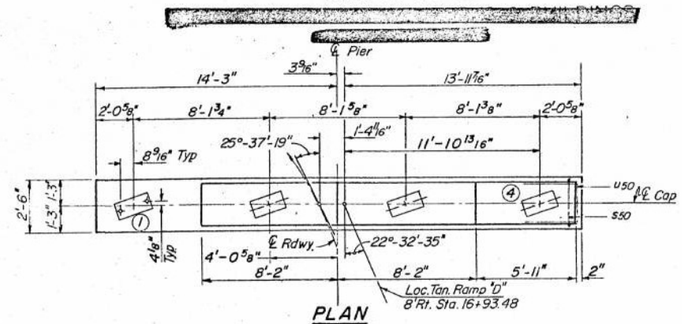

PLAN

Note:

Space reinforcement in cap to miss anchor bolts.
Min. bar laps = 24 dia unless otherwise noted
All edges shall have standard 3/4" chamfers except as noted.
Pour steps monolithically with cap.

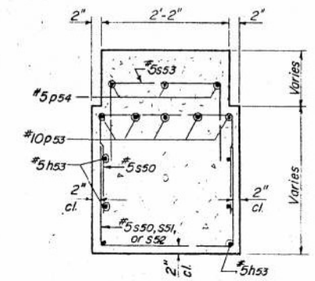

SECTION A-A

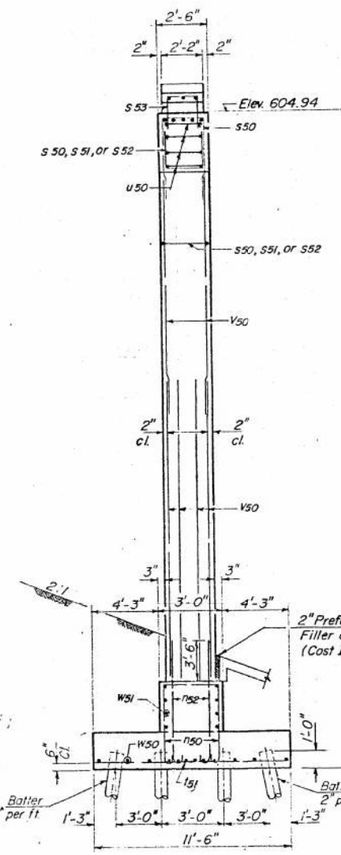

END VIEW

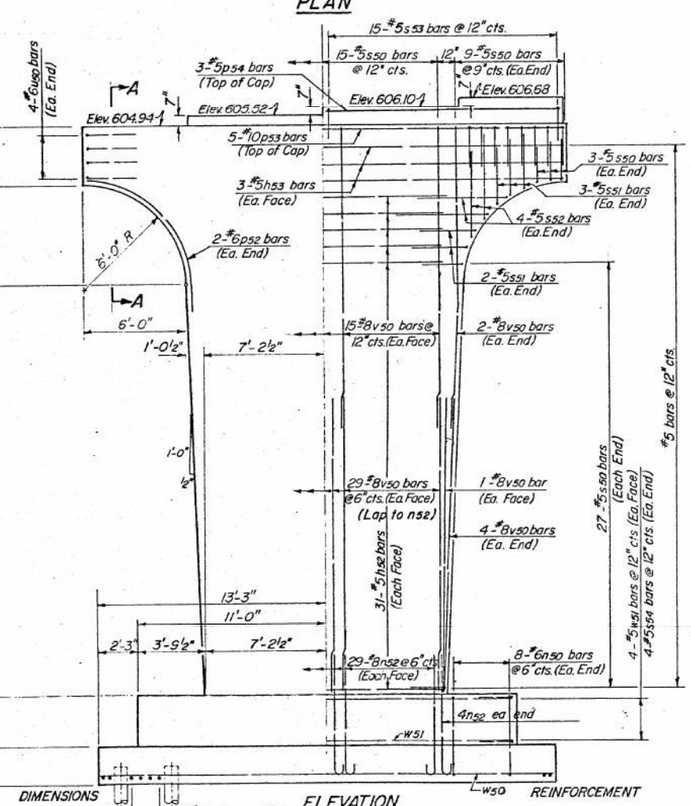

ELEVATION
(Looking East)

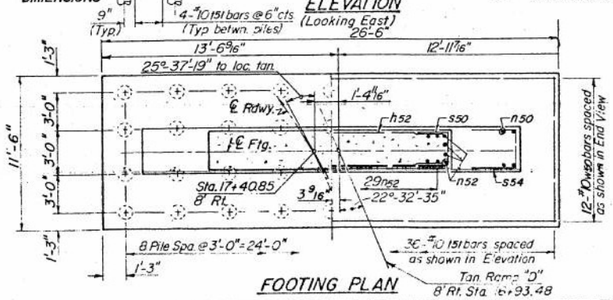

FOOTING PLAN

PILE DATA

Type = Timber
Capacity = 24 Tons
Est. Length = 30'
No Req'd = 35+1 Test Pile

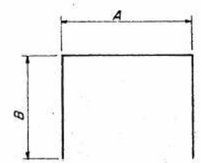

A & B DIMENSIONS

Bar	A	B
s50	2'-2"	2'-4"
s51	2'-2"	3'-3"
s52	2'-2"	5'-3"
s53	1'-10"	2'-0"
s54	2'-8"	2'-6"

s BARS

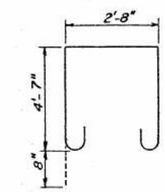

n50 BAR

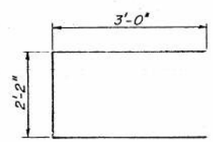

u50 BAR

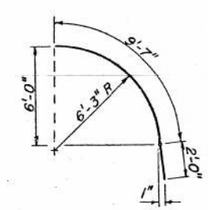

p52 BAR

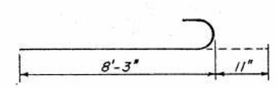

n52 BAR

PIER 2
BILL OF MATERIAL

Bar	No	Size	Length	Shape
h52	62	#5	14'-1"	
h53	6	#5	28'-2"	
n50	16	#6	13'-2"	
n52	66	#8	9'-2"	
p52	4	#6	11'-7"	
p53	5	#10	28'-2"	
p54	3	#5	13'-9"	
s50	93	#5	6'-10"	
s51	10	#5	8'-8"	
s52	8	#5	12'-8"	
s53	15	#5	5'-10"	
s54	8	#5	7'-8"	
t51	36	#10	11'-3"	
u50	8	#6	8'-2"	
v50	104	#8	17'-10"	
w50	12	#10	26'-3"	
w51	8	#5	21'-8"	
Class X Concrete			Cu.Yds.	89.3
Reinforcement Bars			Lbs.	13,080
Creosoted Timber Piles			Lin.ft.	1050
Creosoted Test Piles			Ea.	1

DESIGNED	D.V.K.	EXAMINED	19
CHECKED	G.E.P.	PASSED	ENGINEER OF BRIDGE AND TRAFFIC STRUCTURES
DRAWN	J.J.T.	APPROVED	ENGINEER OF DESIGN
CHECKED	D.V.K.		CHIEF HIGHWAY ENGINEER

PIER NO.2
F.A.I. 55 SEC. 54-4HB
RAMP "D"
LOGAN COUNTY
STA. 16+93.48

FOR INFORMATION ONLY

MODEL: Default
FILE NAME: P:\Transportation\4854 - IDOT PTB 198-023 D6\WOA\CADD 5\1054-0051-72220-038-Existing Plans - Copy (14).dgn

CDI CIVIL DESIGN, INC. WBE / DBE EFFINGHAM, IL LICENSE #184.003222

USER NAME = $USER$	DESIGNED -	REVISED -	
	DRAWN -	REVISED -	
PLOT SCALE = $SCALE$	CHECKED -	REVISED -	
PLOT DATE = 12/19/2024	DATE -	REVISED -	

STATE OF ILLINOIS
DEPARTMENT OF TRANSPORTATION

EXISTING PLANS
STRUCTURE NO. 054-0051

SCALE: SHEET 36 OF 36 SHEETS STA. TO STA.

F.A.I. RTE.	SECTION	COUNTY	TOTAL SHEETS	SHEET NO.
155	(54-4HB)D	LOGAN	133	133
		CONTRACT NO. 72220		
		ILLINOIS	FED. AID PROJECT	