04-25-2025 LETTING ITEM 123

F.A.P RTE	SECTION	COUNTY	TOTAL SHEETS	SHEET NO.
674	(31,410,410-1)RS-4, (82-7K)RS-1	ST. CLAIR	33*	1
		ILLINOIS	CONTRACT NO. 76J62	

* 33 + 1 = 34 TOTAL SHEETS

STATE OF ILLINOIS
DEPARTMENT OF TRANSPORTATION

D-98-022-25

LOCATION OF SECTION INDICATED THUS: -

FOR INDEX OF SHEETS, SEE SHEET NO. 2

PROPOSED HIGHWAY PLANS

FAP 674, FAI 64 (IL 158 / US 50, I-64)
SECTION (31,410,410-1)RS-4, (82-7K)RS-1
PROJECT NHPP-YJ3I(137)
RESURFACING
ST. CLAIR COUNTY

C-98-068-25

TRAFFIC DATA

IL 161 TO SEIBERT RD.
2023 ADT (ACTUAL): 9,150
2025 (ESTIMATED): 9,300
2045 (ESTIMATED): 10,700
SU: 3.0%
MU: 3.0%

SEIBERT RD. TO I-64
2023 ADT (ACTUAL): 17,000
2025 (ESTIMATED): 17,200
2045 (ESTIMATED): 19,800
SU: 2.1%
MU: 2.4%

I-64 TO US 50
2017 ADT (ACTUAL): 20,900
2019 (ESTIMATED): 21,200
2039 (ESTIMATED): 24,400
SU: 3.6%
MU: 4.4%

R7W

BEGIN PROJECT
STA. 115+93.00
LAT: 38.58318
LONG: -89.87480

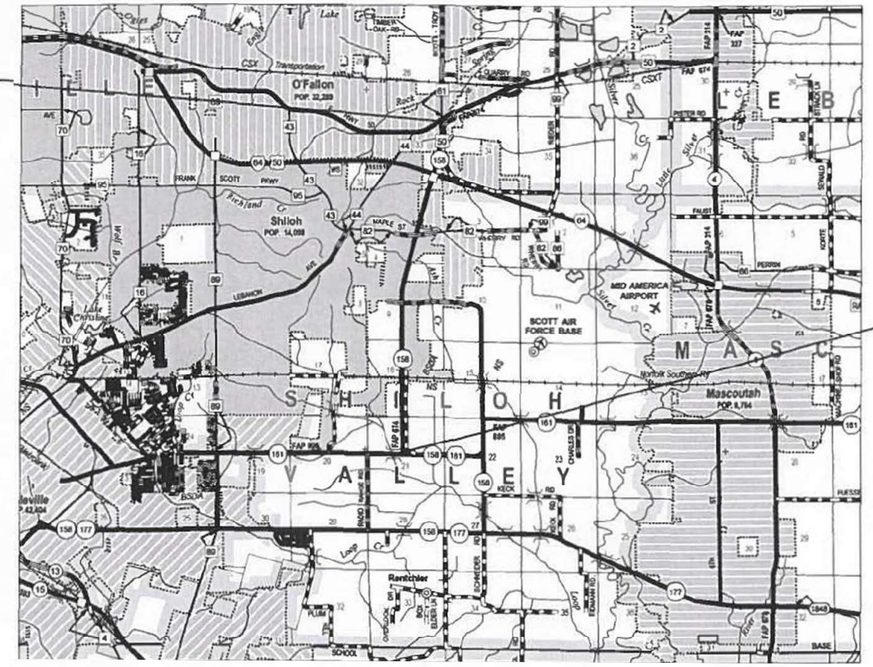

END PROJECT
STA. 351+35.00
LAT: 38.51940
LONG: -89.88340

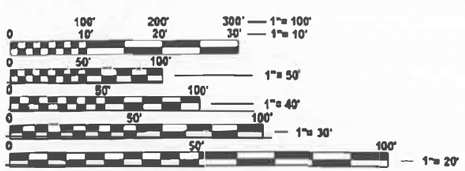

FULL SIZE PLANS HAVE BEEN PREPARED USING STANDARD ENGINEERING SCALES. REDUCED SIZED PLANS WILL NOT CONFORM TO STANDARD SCALES. IN MAKING MEASUREMENTS ON REDUCED PLANS, THE ABOVE SCALES MAY BE USED.

J.U.L.I.E.
JOINT UTILITY LOCATION INFORMATION FOR EXCAVATION
1-800-892-0123
OR 811

GROSS LENGTH = 23,542FT. = 4.459 MILE
NET LENGTH = 23,542 FT. = 4.459 MILE

STATE OF ILLINOIS
DEPARTMENT OF TRANSPORTATION

SUBMITTED January 31, 2025
REGIONAL ENGINEER

March 21, 2025
ENGINEER OF DESIGN AND ENVIRONMENT

March 21, 2025
DIRECTOR OF HIGHWAYS PROJECT IMPLEMENTATION

PROJECT ENGINEER CHERYL KEPLAR
PROJECT MANAGER BRANDON HUMPHREYS

CONTRACT NO. 76J62

PRINTED BY THE AUTHORITY OF THE STATE OF ILLINOIS

REV - MS

INDEX OF SHEETS

HIGHWAY STANDARDS

000001-08	STANDARD SYMBOLS, ABBREVIATIONS AND PATTERNS
001006	DECIMAL OF AN INCH AND OF A FOOT
442001-04	CLASS A PATCHES
630001-13	STEEL PLATE BEAM GUARDRAIL
630301-09	SHOULDER WIDENING FOR TYPE 1 (SPECIAL) GUARDRAIL TERMINALS
631026-06	TRAFFIC BARRIER TERMINAL, TYPE 5
631031-18	TRAFFIC BARRIER TERMINAL, TYPE 6
642001-03	SHOULDER RUMBLE STRIPS, 16 INCH
701101-05	OFF-ROAD OPERATIONS, MULTILAND 15' TO 24' FROM PAVEMENT EDGE
701411-09	LANE CLOSURE, MULTILANE, AT ENTRANCE OR EXIT RAMP, FOR SPEEDS ≥ 45 MPH
701421-08	LANE CLOSURE, MULTILANE, DAY OPERATION ONLY, FOR SPEEDS ≥ 45 MPH TO 55 MPH
701422-10	LANE CLOSURE, MULTILANE, FOR SPEEDS ≥ 45 MPH TO 55 MPH
701426-09	LANE CLOSURE, MULTILANE, INTERMITTENT OR MOVING OPER., FOR SPEEDS ≥ 45 MPH
701601-09	URBAN LANE CLOSURE, MULTILANE, 1W OR 2W WITH NONTRAVERSABLE MEDIAN
701701-10	URBAN LANE CLOSURE, MULTILANE INTERSECTION
701901-10	TRAFFIC CONTROL DEVICES
780001-05	TYPICAL PAVEMENT MARKINGS
781001-04	TYPICAL APPLICATIONS RAISED REFLECTIVE PAVEMENT MARKERS
782006-01	GUARDRAIL AND BARRIER WALL REFLECTOR MOUNTING DETAILS
886001-01	DETECTOR LOOP INSTALLATIONS
889006-01	TYPICAL LAYOUTS FOR DETECTOR LOOPS
420001-10	PAVEMENT JOINTS
631011-10	TRAFFIC BARRIER TERMINAL, TYPE 2
725001-01	OBJECT AND TERMINAL MARKER

GENERAL NOTES

1. THE CONTRACTOR AND THE ENGINEER SHALL BE AWARE THAT NO SURVEY WAS PERFORMED FOR THIS PROJECT. THE STATIONING, TOPOGRAPHY, AND QUANTITIES SHOWN IN THE PLANS WERE CREATED USING MICROFILM AND FIELD MEASUREMENTS. ALL SHALL BE ASSUMED TO BE APPROXIMATE. THE CONTRACTOR SHALL VERIFY DIMENSIONS AND CONDITIONS IN THE FIELD PRIOR TO CONSTRUCTION AND ORDERING OF MATERIALS.

2. THE DEPARTMENT STRONGLY ENCOURAGES THE PRIME CONTRACTOR AND THEIR APPROVED SUB-CONTRACTORS TO HIRE MINORITY, WOMEN AND DISADVANTAGED INDIVIDUALS FROM ITS FEDERALLY FUNDED HIGHWAY CONSTRUCTION CAREERS TRAINING PROGRAM (HCCTP) TO HELP MEET WORKFORCE AND TRAINEE GOALS. THIS PROGRAM IS TRAINING MINORITIES, WOMEN AND DISADVANTAGED INDIVIDUALS IN HIGHWAY CONSTRUCTION-RELATED SKILLS, E.G., MATH FOR THE TRADES, JOB READINESS, TECHNICAL SKILLS IN COURSEWORK (CARPENTRY, CONCRETE FLATWORK, BLUEPRINT READING, SITE PLANS, SITE WORK, TOOLS USE, ETC.) AND OSHA 10 HOUR CERTIFICATION, TO PREPARE THEM FOR A CAREER IN THE HIGHWAY CONSTRUCTION TRADES. GRADUATES ARE WELL-TRAINED AND READY TO BECOME PRODUCTIVE ENTRY-LEVEL CONSTRUCTION WORKERS. CONTACT THE DISTRICT 8 EEO OFFICE AT 618-346-3360 AND/OR THE HCCTP COORDINATOR AT 618-874-6528 TO LEARN MORE ABOUT THE PROGRAM AND FOR ASSISTANCE IN METTING WORKFORCE AND TRAINEE GOALS.

3. ALL AREAS DISTURBED FOR ANY REASON OTHER THAN PROPOSED ON PLANS AND SCHEDULES SHALL BE PERMANENTLY SEEDED AND MULCHED AS DIRECTED BY THE ENGINEER. ALL AREAS DISTURBED BY THE CONTRACTOR OUTSIDE THE PROPOSED CONSTRUCTION LIMITS SHALL BE SEEDED AT THE CONTRACTOR'S EXPENSE.

4. THE THICKNESS OF HOT-MIX ASPHALT SURFACE MIXTURES SHOWN ON THE PLANS IS THE NOMINAL THICKNESS. DEVIATIONS MAY OCCUR DUE TO IRREGULARITIES IN THE EXISTING SURFACE OR BASE ON WHICH THE BITUMINOUS MIXTURE IS PLACED.

5. THE PROPOSED PAVEMENT MARKING SHALL MATCH THE LOCATIONS OF THE EXISTING PAVEMENT MARKING, AS DIRECTED BY THE ENGINEER.

6. WITHIN THE INTERSECTION OF IL 158/US 50 & WHERRY RD./MAPLE ST. AND THE INTERSECTION OF IL 158/US 50 & SEIBERT RD.,THE CONTRACTOR SHALL REPLACE THE EXISTING HMA MATERIAL WITH THE PROPOSED HMA SURFACE COURSE MATERIALS WITHIN THE SAME DAY OF OPERATION BEFORE TRAFFIC IS OPENED ONTO THE LANE, UNLESS DIRECTED BY THE ENGINEER.

7. FOUR CHANGEABLE MESSAGE SIGNS SHALL BE PROVIDED ALONG IL 158/US 50 TO ALERT DRIVERS OF THE ROAD CONSTRUCTION. CHANGEABLE MESSAGE SIGNS SHALL BE PLACED 14 DAYS PRIOR TO BEGINNING ANY WORK. EXACT LOCATIONS OF THE CHANGEABLE MESSAGE SIGNS SHALL BE DETERMINED BY THE ENGINEER.

8. UTILITIES KNOWN TO HAVE FACILITIES WITHIN THE PROJECT AREAARE AS FOLLOWS:

   * AMEREN ILLINOIS (GAS & ELECTRIC)
   * AT&T ILLINOIS (COMMUNICATIONS)
   * COMMONFIELDS OF CAHOKIA PUBLIC WATER DISTRICT
   * CHARTER COMMUNICATIONS, INC.
   * EVERSTREAM GLC HOLDING COMPANY LLC
   * ILLINOIS AMERICAN WATER COMPANY (WATER)
   * LEVEL 3 COMMUNICATIONS, LLC (COMMUNICATIONS)
   * VERIZON BUSINESS
   * CITY OF O'FALLON (WATER & SANITARY SEWER)
   * CITY OF O'FALLON (COMMUNICATIONS)
   * CITY OF O'FALLON (ELECTRIC)
   * VILLAGE OF SHILOH (STORM SEWER)
   * WINDSTREAM KDL, INC. (COMMUNICATIONS)

9. THE CONTRACTOR SHALL PROVIDE POSITIVE AND ADEQUATE DRAINAGE AT ALL TIMES.

10. THE FOLLOWING MIXTURE REQUIREMENTS ARE APPLICABLE FOR THIS PROJECT:

MIXTURE USE	POLY SURFACE	BINDER	PARTIAL DEPTH PATCH		
AC/PG	SBS PG 70-28	PG 64-22	PG 64-22		
DESIGN AIR VOIDS	4.0% @ Ndes=90	4.0% @ Ndes=90	4.0% @ Ndes=90		
MIX COMPOSITION (Gradation)	IL 9.5	IL 9.5 FG	IL 9.5 FG		
FRICTION AGG	MIXTURE "E"	MIXTURE "C"	MIXTURE "C"		
QUALITY MGMT PROGRAM	QCP	QCP	QC/QA		
MatTranDev Required?	YES	YES	NO		

	SHOULDER > 8 FEET WIDE		SHOULDER ≤ 8 FEET WIDE		
MIXTURE USE	SHOULDER (lower)	SHOULDER (surface)	SHOULDER (lower)	SHOULDER (surface)	
AC/PG	PG 64-22	PG 64-22	PG 64-22	PG 64-22	
DESIGN AIR VOIDS	4.0% @ Ndes=30	4.0% @ Ndes=30	4.0% @ Ndes=30	4.0% @ Ndes=30	
MIX COMPOSITION (Gradation)	IL 19.0L	IL 9.5L	IL 19.0L	IL 9.5L	
FRICTION AGG					
QUALITY MGMT PROGRAM	QCP	QCP	QC/QA	QC/QA	
MatTranDev Required?	YES	YES	NO	NO	

	TURN LANES < 500 FEET				
MIXTURE USE	POLY SURFACE	BINDER			
AC/PG	SBS PG 70-28	PG 64-22			
DESIGN AIR VOIDS	4.0% @ Ndes=90	4.0% @ Ndes=90			
MIX COMPOSITION (Gradation)	IL 9.5	IL 9.5 FG			
FRICTION AGG	MIXTURE "E"	MIXTURE "C"			
QUALITY MGMT PROGRAM	QC/QA	QC/QA			
MatTranDev Required?	NO	NO			

Plan quantities for Hot-Mix Asphalt items are calculated using a unit weight of 112 lb/sq yd/in (59.8 kg/sq m/25 mm thickness).

COMMITMENTS

NONE

REV - MS

MODEL: Gen. Notes [Sheet]
FILE NAME: c:\pw_work\pw\dot\dintelman\d1061113\D876J62-Typicals.dgn

USER NAME = Jon.Dintelman	DESIGNED -	REVISED -	
	DRAWN -	REVISED -	
	CHECKED -	REVISED -	
PLOT DATE = 3/14/2025	DATE -	REVISED -	

STATE OF ILLINOIS
DEPARTMENT OF TRANSPORTATION

INDEX OF SHEETS, HIGHWAY STANDARDS, GENERAL NOTES & COMMITMENTS

SCALE: SHEET Gen. Notes SHEETS STA. TO STA.

F.A.P. RTE.	SECTION	COUNTY	TOTAL SHEETS	SHEET NO.
674	(31,410,410-1)RS-4, (82-7K)RS-1	ST. CLAIR	33	2
		CONTRACT NO. 76J62		
	ILLINOIS	FED. AID PROJECT		

CODE NO.	ITEM	UNIT	TOTAL QUANTITY	CONSTRUCTION CODE 80% FED 20% STATE IL 158 ROADWAY 0005 URBAN	CONSTRUCTION CODE 90% FED 10% STATE I-64 RAMPS ROADWAY 0005 URBAN
40600290	BITUMINOUS MATERIALS (TACK COAT)	POUND	57219	47286	9933
40600295	POLYMERIZED BITUMINOUS MATERIALS (TACK COAT)	POUND	151352	131189	20163
40600370	LONGITUDINAL JOINT SEALANT	FOOT	59296	52674	6622
40600405	MATERIAL TRANSFER DEVICE	TON	25988	22538	3450
40600985	PORTLAND CEMENT CONCRETE SURFACE REMOVAL - BUTT JOINT	SQ YD	111	111	
40600990	TEMPORARY RAMP	SQ YD	598	598	
40602975	HOT-MIX ASPHALT BINDER COURSE, IL-9.5FG, N90	TON	11772	10204	1568
40604174	POLYMERIZED HOT-MIX ASPHALT SURFACE COURSE, IL-9.5, MIX "E", N90	TON	14126	12244	1882
44000159	HOT-MIX ASPHALT SURFACE REMOVAL, 2 1/2"	SQ YD	117091	79971	37120
44213000	PATCHING REINFORCEMENT	SQ YD	6256	4207	2049
44200561	CLASS A PATCHES, TYPE I, 11 INCH	SQ YD	21	21	
44200565	CLASS A PATCHES, TYPE II, 11 INCH	SQ YD	663	568	95
44200569	CLASS A PATCHES, TYPE III, 11 INCH	SQ YD	341	311	30
44200571	CLASS A PATCHES, TYPE IV, 11 INCH	SQ YD	5215	3292	1923

	CODE NO.	ITEM	UNIT	TOTAL QUANTITY	CONSTRUCTION CODE 80% FED 20% STATE IL 158 ROADWAY 0005 URBAN	CONSTRUCTION CODE 90% FED 10% STATE I-64 RAMPS ROADWAY 0005 URBAN
	44213200	SAW CUTS	FOOT	17316	13039	4277
	44213202	TIE BARS 1"	EACH	1561	970	591
	48102100	AGGREGATE WEDGE SHOULDER, TYPE B	TON	1062	944	118
	48203100	HOT-MIX ASPHALT SHOULDERS	TON	12761	11627	1134
*	63000001	STEEL PLATE BEAM GUARDRAIL, TYPE A, 6 FOOT POSTS	FOOT	2587.5	2587.5	
*	63100045	TRAFFIC BARRIER TERMINAL, TYPE 2	EACH	2	2	
*	63100070	TRAFFIC BARRIER TERMINAL, TYPE 5	EACH	2	2	
*	63100085	TRAFFIC BARRIER TERMINAL, TYPE 6	EACH	8	8	
*	63100167	TRAFFIC BARRIER TERMINAL, TYPE 1 (SPECIAL) TANGENT	EACH	8	8	
	63200310	GUARDRAIL REMOVAL	FOOT	2575	2575	
	64200116	SHOULDER RUMBLE STRIPS, 16 INCH	FOOT	114718	101474	13244
	67000400	ENGINEER'S FIELD OFFICE, TYPE A	CAL MO	6	6	
	67100100	MOBILIZATION	L SUM	1	1	
	70100310	TRAFFIC CONTROL AND PROTECTION, STANDARD 701421	L SUM	1	1	

* SPECIALTY ITEM

REV - MS

MODEL: SOQ-1 [Sheet]
FILE NAME: c:\pw_work\pw\dot\dintelman\d1061113\D876J62-Typicals.dgn

USER NAME = Jon.Dintelman	DESIGNED -	REVISED -	
	DRAWN -	REVISED -	
	CHECKED -	REVISED -	
PLOT DATE = 2/14/2025	DATE -	REVISED -	

STATE OF ILLINOIS
DEPARTMENT OF TRANSPORTATION

SUMMARY OF QUANTITIES

SCALE: SHEET SOQ-1 OF SHEETS STA. TO STA.

F.A.P. RTE.	SECTION	COUNTY	TOTAL SHEETS	SHEET NO.
674	(31,410,410-1)RS-4, (82-7K)RS-1	ST. CLAIR	33	3

CONTRACT NO. 76J62

ILLINOIS FED. AID PROJECT

	CODE NO.	ITEM	UNIT	TOTAL QUANTITY	CONSTRUCTION CODE 80% FED 20% STATE IL 158 ROADWAY 0005 URBAN	CONSTRUCTION CODE 90% FED 10% STATE I-64 RAMPS ROADWAY 0005 URBAN
	70100315	TRAFFIC CONTROL AND PROTECTION, STANDARD 701422	EACH	1	1	
	70100420	TRAFFIC CONTROL AND PROTECTION, STANDARD 701411	EACH	8		8
	70102630	TRAFFIC CONTROL AND PROTECTION, STANDARD 701601	L SUM	1	1	
	70102635	TRAFFIC CONTROL AND PROTECTION, STANDARD 701701	L SUM	1	1	
	70107025	CHANGEABLE MESSAGE SIGN	CAL DA	564	564	
	70300100	SHORT TERM PAVEMENT MARKING	FOOT	7448	6648	800
	70300150	SHORT TERM PAVEMENT MARKING REMOVAL	SQ FT	1800	1800	
	70300211	TEMPORARY PAVEMENT MARKING LETTERS AND SYMBOLS - PAINT	SQ FT	300	300	
	70300241	TEMPORARY PAVEMENT MARKING - LINE 6"- PAINT	FOOT	132563	107359	25204
	70300251	TEMPORARY PAVEMENT MARKING - LINE 8"- PAINT	FOOT	7630	7630	
	70300261	TEMPORARY PAVEMENT MARKING - LINE 12"- PAINT	FOOT	966	966	
	70300281	TEMPORARY PAVEMENT MARKING - LINE 24"- PAINT	FOOT	172	172	
*	72501000	TERMINAL MARKER - DIRECT APPLIED	EACH	8	8	
*	78000100	THERMOPLASTIC PAVEMENT MARKING - LETTERS AND SYMBOLS	SQ FT	300	300	

* SPECIALTY ITEM

	CODE NO.	ITEM	UNIT	TOTAL QUANTITY	CONSTRUCTION CODE 80% FED 20% STATE IL 158 ROADWAY 0005 URBAN	CONSTRUCTION CODE 90% FED 10% STATE I-64 RAMPS ROADWAY 0005 URBAN
*	78000400	THERMOPLASTIC PAVEMENT MARKING - LINE 6"	FOOT	132563	107359	25204
*	78000500	THERMOPLASTIC PAVEMENT MARKING - LINE 8"	FOOT	7630	7630	
*	78000600	THERMOPLASTIC PAVEMENT MARKING - LINE 12"	FOOT	966	966	
*	78000650	THERMOPLASTIC PAVEMENT MARKING - LINE 24"	FOOT	172	172	
*	78100100	RAISED REFLECTIVE PAVEMENT MARKER	EACH	966	966	
*	78200005	GUARDRAIL REFLECTORS, TYPE A	EACH	67	67	
	78300200	RAISED REFLECTIVE PAVEMENT MARKER REMOVAL	EACH	709	709	
*	80300100	LOCATING UNDERGROUND CABLE	FOOT	270	270	
	X4405030	LONGITUDINAL PARTIAL DEPTH REMOVAL 3"	FOOT	33617	33617	
	X4406804	PORTLAND CEMENT CONCRETE SURFACE REMOVAL 1/2"	SQ YD	87507	87507	
Ø	Z0076600	TRAINEES	HOUR	3000	3000	
	X4420900	LONGITUDINAL PARTIAL DEPTH PATCHING	TON	1850	1850	
Ø	Z0076604	TRAINEES TRAINING PROGRAM GRADUATE	HOUR	3000	3000	
	X8860105	DETECTOR LOOP REPLACEMENT	FOOT	4260	4260	

Ø 0042

REV - MS

MODEL: SOQ-2 [Sheet]
FILE NAME: c:\pw_work\pw\dot\dintelman\jnd10611113\D876J62-Typicals.dgn

USER NAME = Jon.Dintelman	DESIGNED -	REVISED -	
	DRAWN -	REVISED -	
	CHECKED -	REVISED -	
PLOT DATE = 2/14/2025	DATE -	REVISED -	

STATE OF ILLINOIS
DEPARTMENT OF TRANSPORTATION

SUMMARY OF QUANTITIES

SCALE: SHEET SOQ-2 OF SHEETS STA. TO STA.

F.A.P. RTE.	SECTION	COUNTY	TOTAL SHEETS	SHEET NO.
674	(31,410,410-1)RS-4, (82-7K)RS-1	ST. CLAIR	33	4

CONTRACT NO. 76J62

ILLINOIS FED. AID PROJECT

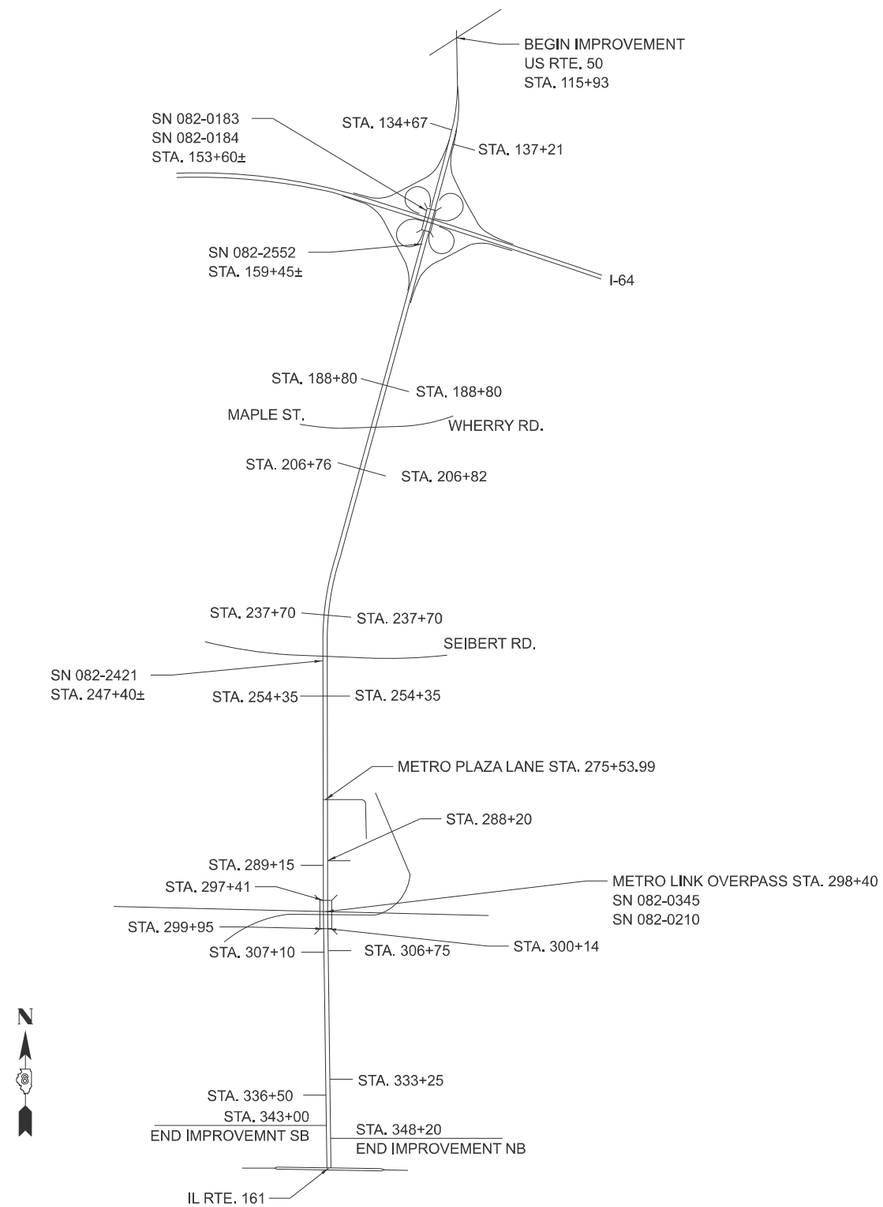

NOT TO SCALE

MODEL: Location Map [Sheet]
FILE NAME: c:\pw_work\pwidot\dintelman\jn\d1061113\D876J62-Typicals.dgn

USER NAME = Jon.Dintelman	DESIGNED -	REVISED -	
	DRAWN -	REVISED -	
	CHECKED -	REVISED -	
PLOT DATE = 1/30/2025	DATE -	REVISED -	

STATE OF ILLINOIS
DEPARTMENT OF TRANSPORTATION

LOCATION MAP

SCALE: | SHEET Location Map | SHEETS | STA. | TO STA.

F.A.P. RTE.	SECTION	COUNTY	TOTAL SHEETS	SHEET NO.
674	(31,410,410-1)RS-4, (82-7K)RS-1	ST. CLAIR	33	5
		CONTRACT NO. 76J62		
		ILLINOIS	FED. AID PROJECT	

LEGEND

1. EXISTING PCC PAVEMENT 8"
2. EXISTING PAVEMENT (DEPTH UNKNOWN)
3. EXISTING CURB & GUTTER
4. EXISTING GRANULAR SUBBASE, 4"
5. EXISTING HOT-MIX ASPHALT SHOULDERS, 8"
6. EXISTING AGGREGATE SHOULDERS, 8"
7. EXISTING HOT-MIX ASPHALT RESURFACING
8. EXISTING HOT-MIX ASPHALT BINDER COURSE, VARIES 0"-19"
9. EXISTING PIPE UNDERDRAIN
10. EXISTING CONCRETE MEDIAN
11. EXISTING CONCRETE CURB AND GUTTER
12. EXISTING AGGREGATE WEDGE SHOULDERS, TYPE B

A. PROPOSED HOT-MIX ASPHALT SURFACE REMOVAL, 2.50"
B. PROPOSED BINDER
C. PROPOSED HOT-MIX ASPHALT SURFACE COURSE,
D. PROPOSED HOT-MIX ASPHALT SHOULDERS
E. PROPOSED LONGITUDINAL JOINT SEALANT
F. PROPOSED AGGREGATE WEDGE TYPE-B
G. PROPOSED TACK COAT

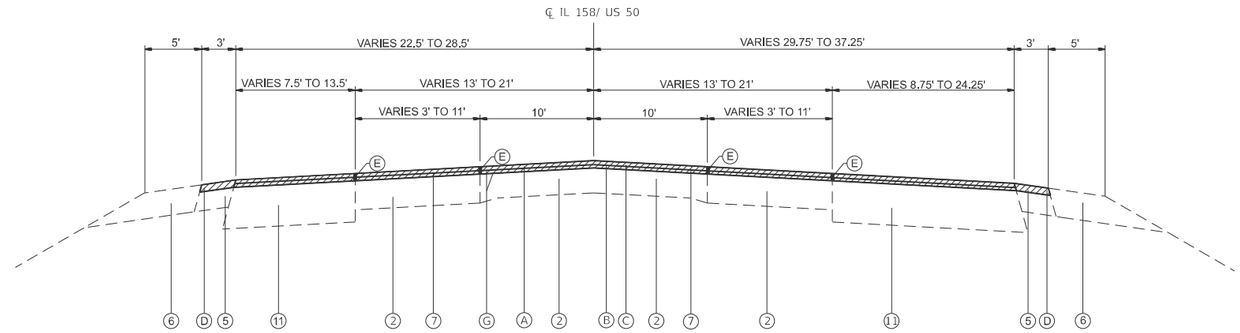

EXISTING TYPICAL SECTION

STA. 115+93 TO STA. 126+69

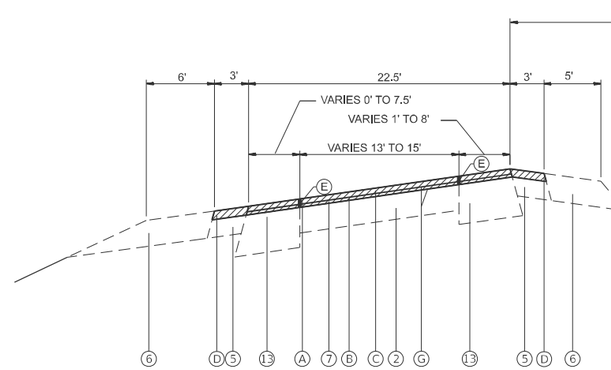

EXISTING NORTHBOUND TYPICAL SECTION

STA. 126+69 TO STA. 137+21

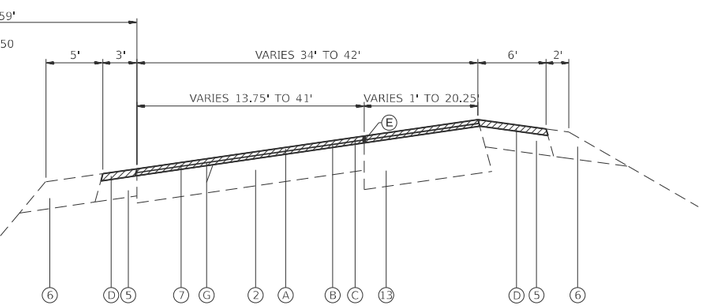

EXISTING SOUTHBOUND TYPICAL SECTION

STA. 126+69 TO STA. 134+49

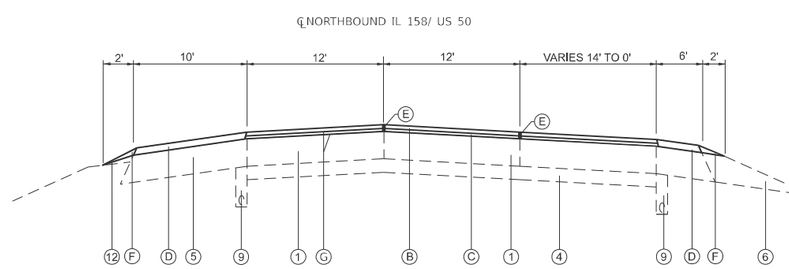

EXISTING NORTHBOUND TYPICAL SECTION

STA. 137+21 TO STA. 151+22
STA. 156+00 TO STA. 174+08

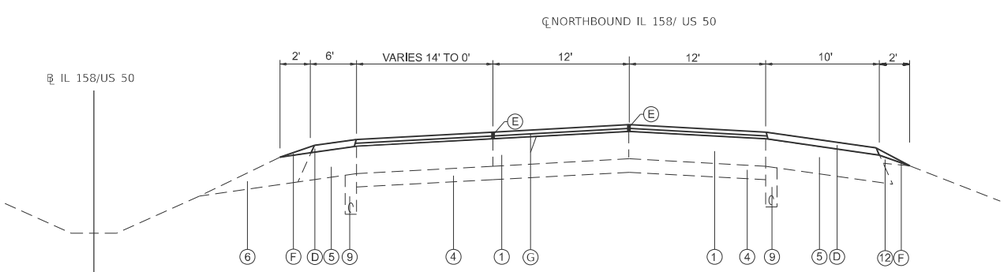

EXISTING SOUTHBOUND TYPICAL SECTION

STA. 134+67 TO STA. 151+22
STA. 156+00 TO STA. 178+07

MODEL: Typical 1 [Sheet]
FILE NAME: c:\pw_work\pwidot\dintelman\jnd1061113\D876J62-Typicals.dgn

USER NAME = Jon.Dintelman	DESIGNED -	REVISED -	
	DRAWN -	REVISED -	
	CHECKED -	REVISED -	
PLOT DATE = 2/26/2025	DATE -	REVISED -	

STATE OF ILLINOIS
DEPARTMENT OF TRANSPORTATION

TYPICALS

SCALE: | SHEET Typical 1 OF SHEETS | STA. TO STA.

F.A.P. RTE.	SECTION	COUNTY	TOTAL SHEETS	SHEET NO.
674	(31,410,410-1)RS-4, (82-7K)RS-1	ST. CLAIR	33	6

CONTRACT NO. 76J62

ILLINOIS | FED. AID PROJECT

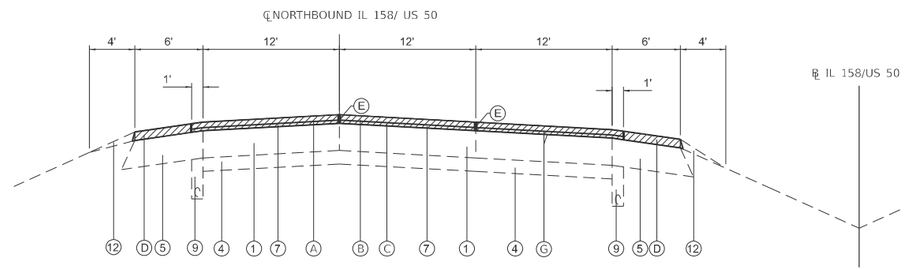

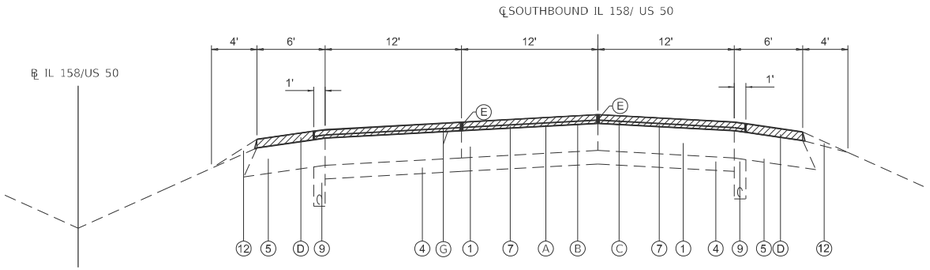

EXISTING NORTHBOUND TYPICAL SECTION

STA. 151+22 TO STA. 152+34
STA. 154+90 TO STA. 156+00

EXISTING SOUTHBOUND TYPICAL SECTION

STA. 151+22 TO STA. 152+34
STA. 154+90 TO STA. 156+00

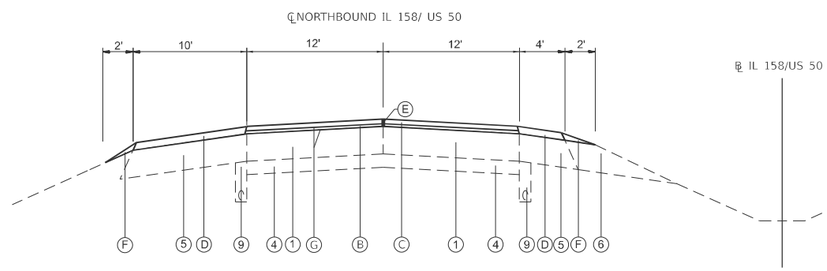

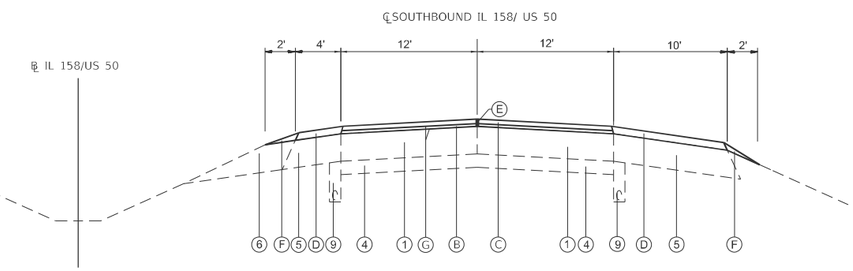

EXISTING TYPICAL SECTION

STA. 174+08 TO STA. 188+80
STA. 206+82 TO STA. 234+00
STA. 254+35 TO STA. 268+65

LEGEND

1. EXISTING PCC PAVEMENT 8"
2. EXISTING PAVEMENT (DEPTH UNKNOWN)
3. EXISTING CURB & GUTTER
4. EXISTING GRANULAR SUBBASE, 4"
5. EXISTING HOT-MIX ASPHALT SHOULDERS, 8"
6. EXISTING AGGREGATE SHOULDERS, 8"
7. EXISTING HOT-MIX ASPHALT RESURFACING
8. EXISTING HOT-MIX ASPHALT BINDER COURSE, VARIES 0"-19"
9. EXISTING PIPE UNDERDRAIN
10. EXISTING CONCRETE MEDIAN
11. EXISTING CONCRETE CURB AND GUTTER
12. EXISTING AGGREGATE WEDGE SHOULDERS, TYPE B

A. PROPOSED HOT-MIX ASPHALT SURFACE REMOVAL, 2.50"
B. PROPOSED BINDER
C. PROPOSED HOT-MIX ASPHALT SURFACE COURSE,
D. PROPOSED HOT-MIX ASPHALT SHOULDERS
E. PROPOSED LONGITUDINAL JOINT SEALANT
F. PROPOSED AGGREGATE WEDGE TYPE-B
G. PROPOSED TACK COAT

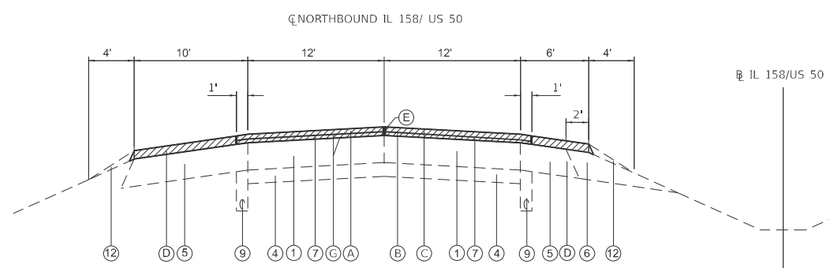

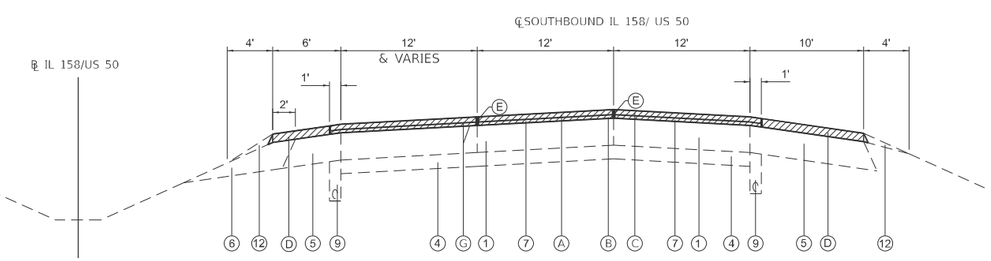

EXISTING TYPICAL SECTION

STA. 188+80 TO STA. 194+50

MODEL: Typical 2 [Sheet]
FILE NAME: c:\pw_work\pwidot\dintelman\jnid10611\D876J62-Typicals.dgn

USER NAME = Jon.Dintelman	DESIGNED -	REVISED -	
	DRAWN -	REVISED -	
	CHECKED -	REVISED -	
PLOT DATE = 2/26/2025	DATE -	REVISED -	

STATE OF ILLINOIS
DEPARTMENT OF TRANSPORTATION

TYPICALS

SCALE: SHEET Typical 2 OF SHEETS STA. TO STA.

F.A.P. RTE.	SECTION	COUNTY	TOTAL SHEETS	SHEET NO.
674	(31,410,410-1)RS-4, (82-7K)RS-1	ST. CLAIR	33	7

CONTRACT NO. 76J62

ILLINOIS FED. AID PROJECT

LEGEND

1. EXISTING PCC PAVEMENT 8"
2. EXISTING PAVEMENT (DEPTH UNKNOWN)
3. EXISTING CURB & GUTTER
4. EXISTING GRANULAR SUBBASE, 4"
5. EXISTING HOT-MIX ASPHALT SHOULDERS, 8"
6. EXISTING AGGREGATE SHOULDERS, 8"
7. EXISTING HOT-MIX ASPHALT RESURFACING
8. EXISTING HOT-MIX ASPHALT BINDER COURSE, VARIES 0"-19"
9. EXISTING PIPE UNDERDRAIN
10. EXISTING CONCRETE MEDIAN
11. EXISTING CONCRETE CURB AND GUTTER
12. EXISTING AGGREGATE WEDGE SHOULDERS, TYPE B

A. PROPOSED HOT-MIX ASPHALT SURFACE REMOVAL, 2.50"
B. PROPOSED BINDER
C. PROPOSED HOT-MIX ASPHALT SURFACE COURSE,
D. PROPOSED HOT-MIX ASPHALT SHOULDERS
E. PROPOSED LONGITUDINAL JOINT SEALANT
F. PROPOSED AGGREGATE WEDGE TYPE-B
G. PROPOSED TACK COAT

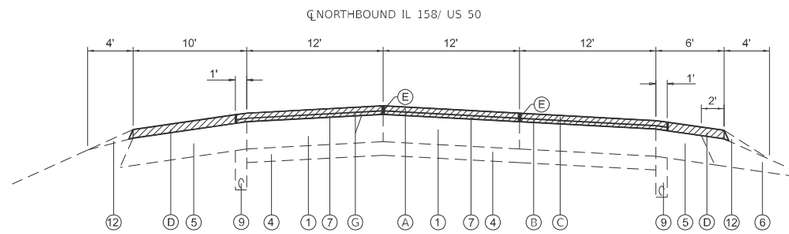

EXISTING NORTHBOUND TYPICAL SECTION

STA. 204+60 TO STA. 206+76
STA. 250+60 TO STA. 253+85

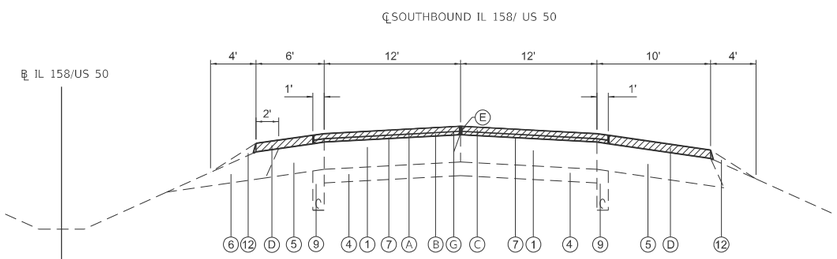

EXISTING SOUTHBOUND TYPICAL SECTION

STA. 204+60 TO STA. 206+76
STA. 248+50 TO STA. 254+35

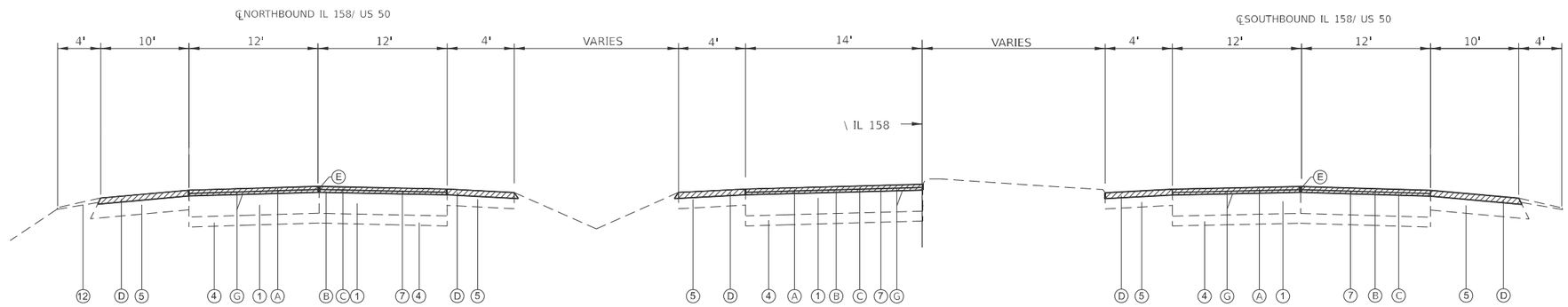

EXISTING TYPICAL SECTION

STA. 194+50 to STA. 198+00

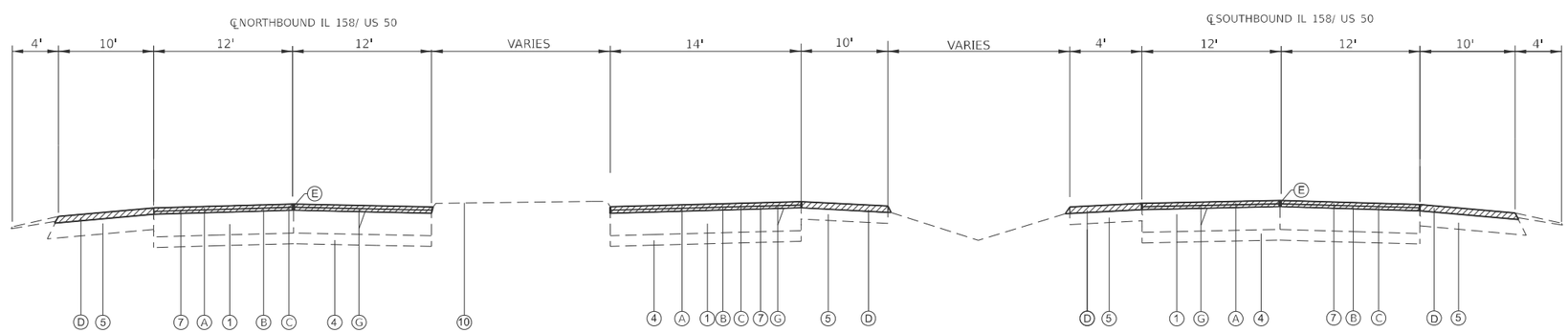

EXISTING TYPICAL SECTION

STA. 198+00 TO STA. 202+08

MODEL: Typical 3 [Sheet]
FILE NAME: c:\pw_work\pwidot\dintelman\jnd10611\D876J62-Typicals.dgn

USER NAME = Jon.Dintelman	DESIGNED -	REVISED -	
	DRAWN -	REVISED -	
	CHECKED -	REVISED -	
PLOT DATE = 2/26/2025	DATE -	REVISED -	

STATE OF ILLINOIS
DEPARTMENT OF TRANSPORTATION

TYPICALS

SCALE: | SHEET Typical 3 OF SHEETS | STA. | TO STA.

F.A.P. RTE.	SECTION	COUNTY	TOTAL SHEETS	SHEET NO.
674	(31,410,410-1)RS-4, (82-7K)RS-1	ST. CLAIR	33	8

CONTRACT NO. 76J62

ILLINOIS | FED. AID PROJECT

LEGEND

1. EXISTING PCC PAVEMENT 8"
2. EXISTING PAVEMENT (DEPTH UNKNOWN)
3. EXISTING CURB & GUTTER
4. EXISTING GRANULAR SUBBASE, 4"
5. EXISTING HOT-MIX ASPHALT SHOULDERS, 8"
6. EXISTING AGGREGATE SHOULDERS, 8"
7. EXISTING HOT-MIX ASPHALT RESURFACING
8. EXISTING HOT-MIX ASPHALT BINDER COURSE, VARIES 0"-19"
9. EXISTING PIPE UNDERDRAIN
10. EXISTING CONCRETE MEDIAN
11. EXISTING CONCRETE CURB AND GUTTER
12. EXISTING AGGREGATE WEDGE SHOULDERS, TYPE B

A. PROPOSED HOT-MIX ASPHALT SURFACE REMOVAL, 2.50"
B. PROPOSED BINDER
C. PROPOSED HOT-MIX ASPHALT SURFACE COURSE,
D. PROPOSED HOT-MIX ASPHALT SHOULDERS
E. PROPOSED LONGITUDINAL JOINT SEALANT
F. PROPOSED AGGREGATE WEDGE TYPE-B
G. PROPOSED TACK COAT

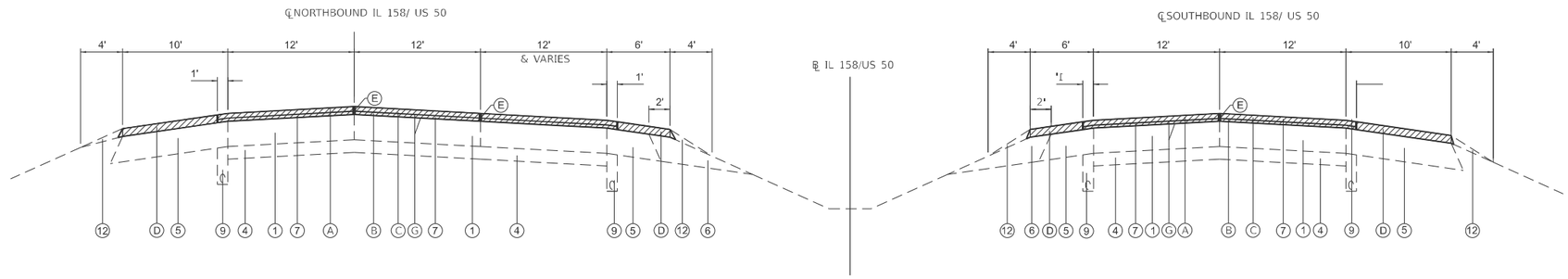

EXISTING TYPICAL SECTION

STA. 202+08 TO STA. 206+82

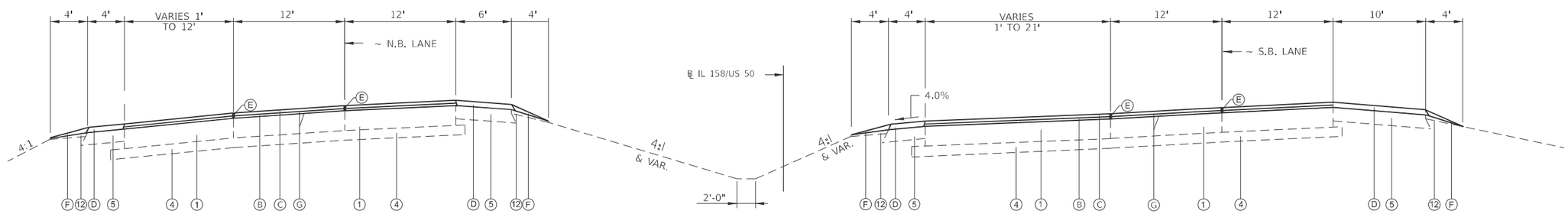

EXISTING TYPICAL SECTION

STA. 234+00 TO STA. 237+70

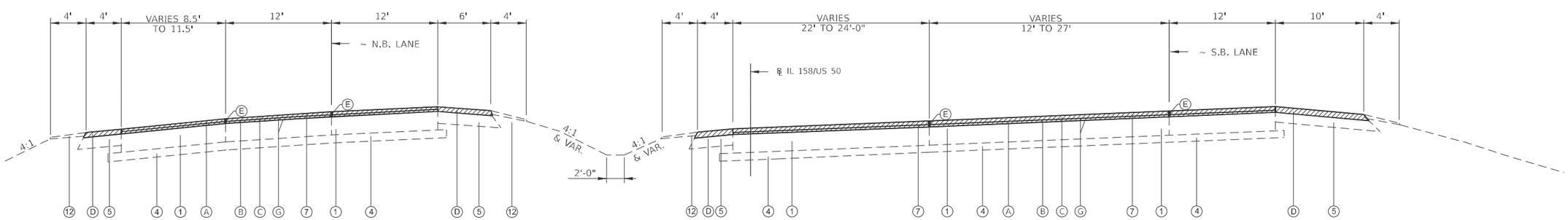

EXISTING TYPICAL SECTION

STA. 237+70.00 TO STA. 240+12

MODEL: Miss. Typ. [Sheet]
FILE NAME: c:\pw_work\pwidot\dintelman\jnd1061113\D876J62-Typicals.dgn

USER NAME = Jon.Dintelman	DESIGNED -	REVISED -	
	DRAWN -	REVISED -	
	CHECKED -	REVISED -	
PLOT DATE = 2/26/2025	DATE -	REVISED -	

STATE OF ILLINOIS
DEPARTMENT OF TRANSPORTATION

TYPICALS

SCALE: | SHEET Miss. Typ OF SHEETS | STA. | TO STA.

F.A.P. RTE.	SECTION	COUNTY	TOTAL SHEETS	SHEET NO.
674	(31,410,410-1)RS-4, (82-7K)RS-1	ST. CLAIR	33	9

CONTRACT NO. 76J62

ILLINOIS | FED. AID PROJECT

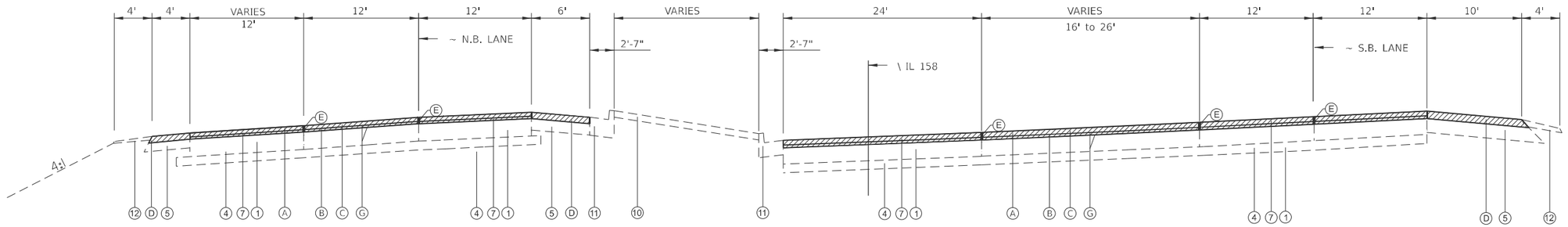

EXISTING TYPICAL SECTION

STA. 240+12 TO STA. 242+37

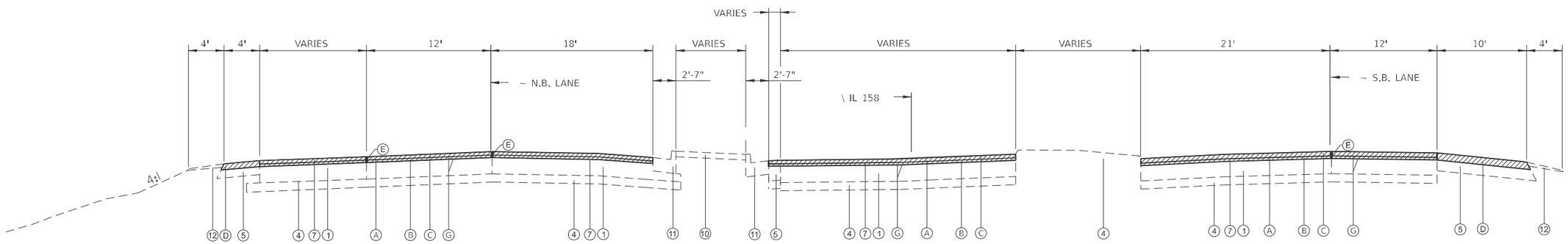

EXISTING TYPICAL SECTION

STA. 242+37 TO STA. 245+77

LEGEND

1. EXISTING PCC PAVEMENT 8"
2. EXISTING PAVEMENT (DEPTH UNKNOWN)
3. EXISTING CURB & GUTTER
4. EXISTING GRANULAR SUBBASE, 4"
5. EXISTING HOT-MIX ASPHALT SHOULDERS, 8"
6. EXISTING AGGREGATE SHOULDERS, 8"
7. EXISTING HOT-MIX ASPHALT RESURFACING
8. EXISTING HOT-MIX ASPHALT BINDER COURSE, VARIES 0"-19"
9. EXISTING PIPE UNDERDRAIN
10. EXISTING CONCRETE MEDIAN
11. EXISTING CONCRETE CURB AND GUTTER
12. EXISTING AGGREGATE WEDGE SHOULDERS, TYPE B

A. PROPOSED HOT-MIX ASPHALT SURFACE REMOVAL, 2.50"
B. PROPOSED BINDER
C. PROPOSED HOT-MIX ASPHALT SURFACE COURSE,
D. PROPOSED HOT-MIX ASPHALT SHOULDERS
E. PROPOSED LONGITUDINAL JOINT SEALANT
F. PROPOSED AGGREGATE WEDGE TYPE-B
G. PROPOSED TACK COAT

MODEL: Typical 4 [Sheet]
FILE NAME: c:\pw_work\pwidot\dintelman\d1061113\D76J62-Typicals.dgn

USER NAME = Jon.Dintelman	DESIGNED -	REVISED -	
	DRAWN -	REVISED -	
	CHECKED -	REVISED -	
PLOT DATE = 2/26/2025	DATE -	REVISED -	

STATE OF ILLINOIS
DEPARTMENT OF TRANSPORTATION

TYPICALS

SCALE: | SHEET Typical 4 OF SHEETS | STA. | TO STA.

F.A.P. RTE.	SECTION	COUNTY	TOTAL SHEETS	SHEET NO.
674	(31,410,410-1)RS-4, (82-7K)RS-1	ST. CLAIR	33	10

CONTRACT NO. 76J62

ILLINOIS | FED. AID PROJECT

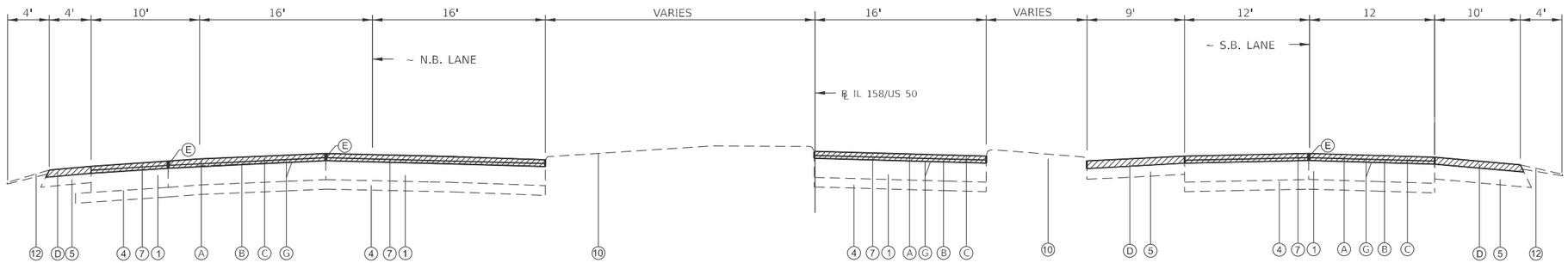

EXISTING TYPICAL SECTION

STA. 247+00 TO STA. 249+00

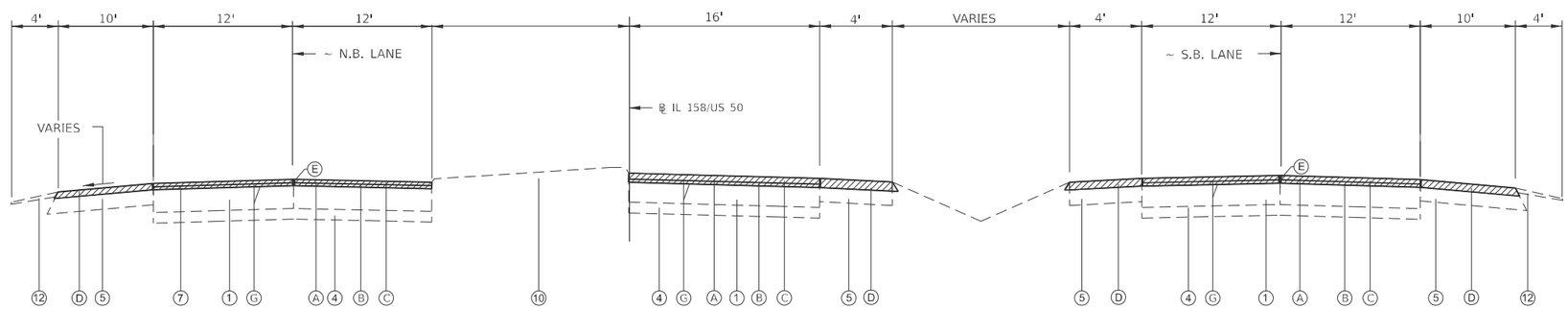

EXISTING TYPICAL SECTION

STA. 249+00 to STA. 251+10

LEGEND

1. EXISTING PCC PAVEMENT 8"
2. EXISTING PAVEMENT (DEPTH UNKNOWN)
3. EXISTING CURB & GUTTER
4. EXISTING GRANULAR SUBBASE, 4"
5. EXISTING HOT-MIX ASPHALT SHOULDERS, 8"
6. EXISTING AGGREGATE SHOULDERS, 8"
7. EXISTING HOT-MIX ASPHALT RESURFACING
8. EXISTING HOT-MIX ASPHALT BINDER COURSE, VARIES 0"-19"
9. EXISTING PIPE UNDERDRAIN
10. EXISTING CONCRETE MEDIAN
11. EXISTING CONCRETE CURB AND GUTTER
12. EXISTING AGGREGATE WEDGE SHOULDERS, TYPE B

A. PROPOSED HOT-MIX ASPHALT SURFACE REMOVAL, 2.50"
B. PROPOSED BINDER
C. PROPOSED HOT-MIX ASPHALT SURFACE COURSE,
D. PROPOSED HOT-MIX ASPHALT SHOULDERS
E. PROPOSED LONGITUDINAL JOINT SEALANT
F. PROPOSED AGGREGATE WEDGE TYPE-B
G. PROPOSED TACK COAT

MODEL: Typical 5 [Sheet]
FILE NAME: c:\pw_work\pwidot\dintelman\d1061113\D876J62-Typicals.dgn

USER NAME = Jon.Dintelman	DESIGNED -	REVISED -	
	DRAWN -	REVISED -	
	CHECKED -	REVISED -	
PLOT DATE = 2/26/2025	DATE -	REVISED -	

STATE OF ILLINOIS
DEPARTMENT OF TRANSPORTATION

TYPICALS

SCALE: | SHEET Typical 5 OF SHEETS | STA. | TO STA.

F.A.P. RTE.	SECTION	COUNTY	TOTAL SHEETS	SHEET NO.
674	(31,410,410-1)RS-4, (82-7K)RS-1	ST. CLAIR	33	11

CONTRACT NO. 76J62

ILLINOIS | FED. AID PROJECT

LEGEND

1. EXISTING PCC PAVEMENT 8"
2. EXISTING PAVEMENT (DEPTH UNKNOWN)
3. EXISTING CURB & GUTTER
4. EXISTING GRANULAR SUBBASE, 4"
5. EXISTING HOT-MIX ASPHALT SHOULDERS, 8"
6. EXISTING AGGREGATE SHOULDERS, 8"
7. EXISTING HOT-MIX ASPHALT RESURFACING
8. EXISTING HOT-MIX ASPHALT BINDER COURSE, VARIES 0"-19"
9. EXISTING PIPE UNDERDRAIN
10. EXISTING CONCRETE MEDIAN
11. EXISTING CONCRETE CURB AND GUTTER
12. EXISTING AGGREGATE WEDGE SHOULDERS, TYPE B

A. PROPOSED HOT-MIX ASPHALT SURFACE REMOVAL, 2.50"
B. PROPOSED BINDER
C. PROPOSED HOT-MIX ASPHALT SURFACE COURSE,
D. PROPOSED HOT-MIX ASPHALT SHOULDERS
E. PROPOSED LONGITUDINAL JOINT SEALANT
F. PROPOSED AGGREGATE WEDGE TYPE-B
G. PROPOSED TACK COAT

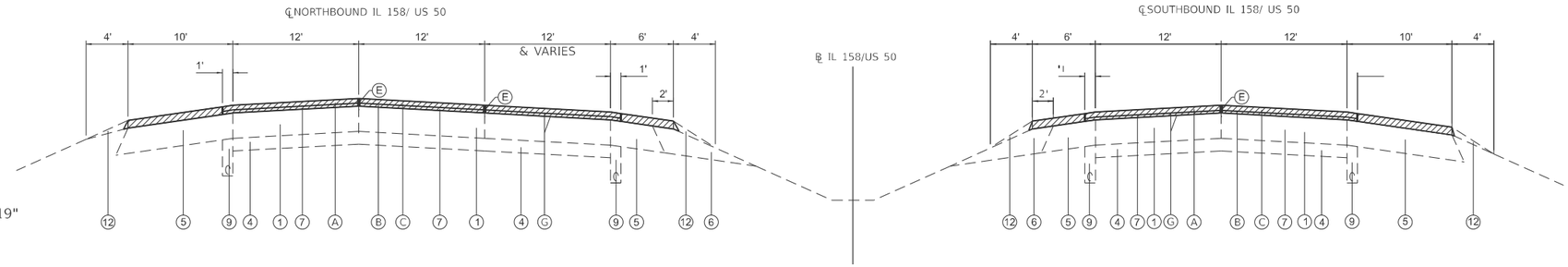

EXISTING TYPICAL SECTION

STA. 251+10 TO STA. 254+35

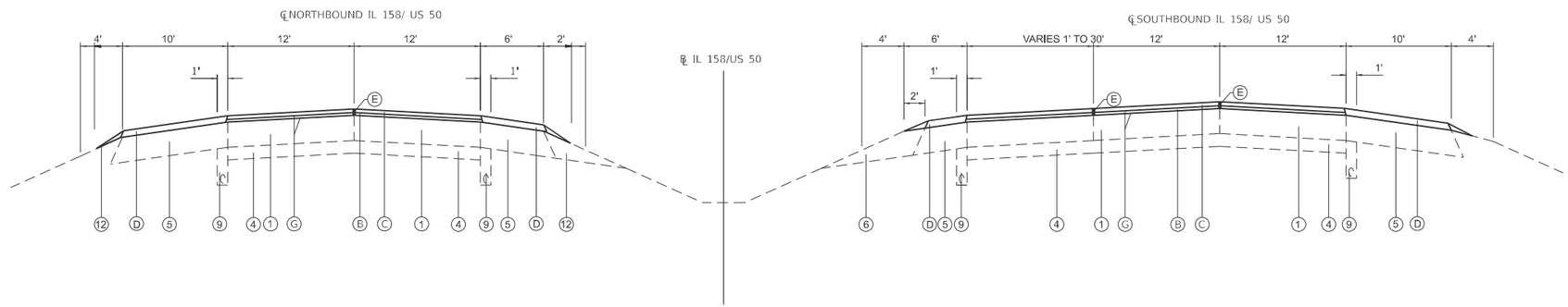

EXISTING TYPICAL SECTION

STA. 268+65 TO STA. 271+35

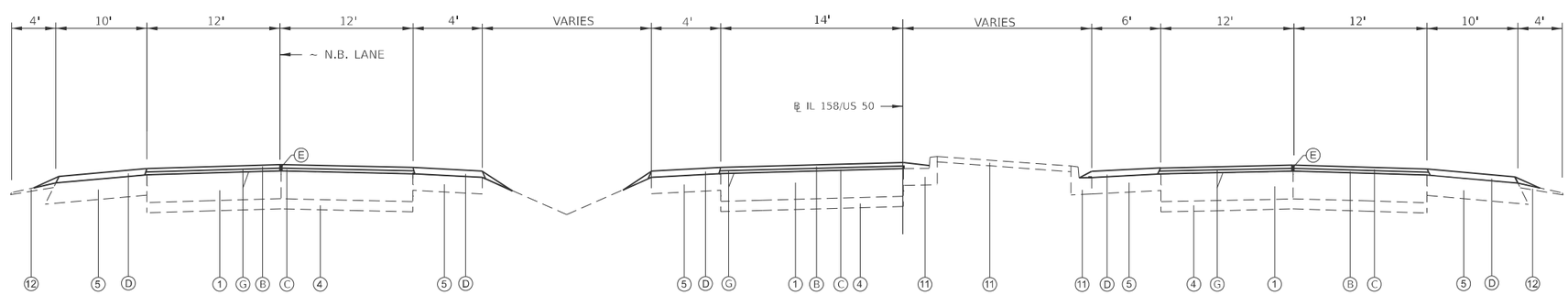

EXISTING TYPICAL SECTION

STA. 271+35 to STA. 275+80

MODEL: Typical 7 [Sheet]
FILE NAME: c:\pw_work\pwidot\dintelman\d1061113\D76J62-Typicals.dgn

USER NAME = Jon.Dintelman	DESIGNED -	REVISED -	
	DRAWN -	REVISED -	
	CHECKED -	REVISED -	
PLOT DATE = 2/26/2025	DATE -	REVISED -	

STATE OF ILLINOIS
DEPARTMENT OF TRANSPORTATION

TYPICALS

SCALE: | SHEET Typical 7 OF SHEETS | STA. | TO STA.

F.A.P. RTE.	SECTION	COUNTY	TOTAL SHEETS	SHEET NO.
674	(31,410,410-1)RS-4, (82-7K)RS-1	ST. CLAIR	33	12

CONTRACT NO. 76J62

ILLINOIS | FED. AID PROJECT

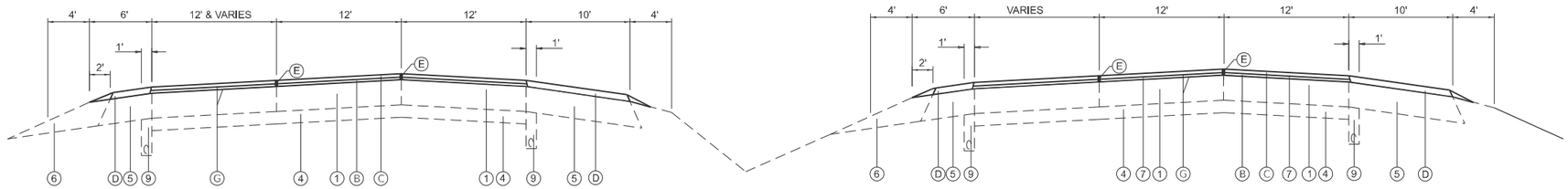

EXISTING TYPICAL SECTION

STA. 275+80 TO STA. 281+50

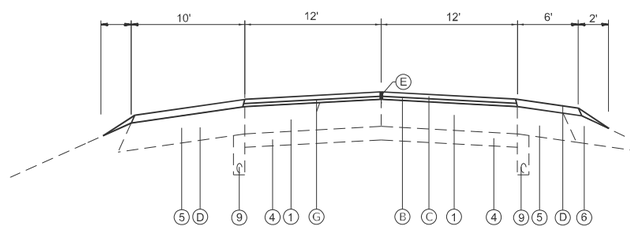

EXISTING NORTHBOUND TYPICAL SECTION

STA. 281+50 TO STA. 288+20

STA. 306+75 TO STA. 333+25

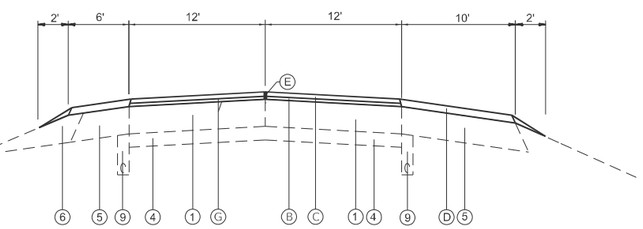

EXISTING SOUTHBOUND TYPICAL SECTION

STA. 281+50 TO STA. 289+15

STA. 307+10 TO STA. 336+50

LEGEND

1. EXISTING PCC PAVEMENT 8"
2. EXISTING PAVEMENT (DEPTH UNKNOWN)
3. EXISTING CURB & GUTTER
4. EXISTING GRANULAR SUBBASE, 4"
5. EXISTING HOT-MIX ASPHALT SHOULDERS, 8"
6. EXISTING AGGREGATE SHOULDERS, 8"
7. EXISTING HOT-MIX ASPHALT RESURFACING
8. EXISTING HOT-MIX ASPHALT BINDER COURSE, VARIES 0"-19"
9. EXISTING PIPE UNDERDRAIN
10. EXISTING CONCRETE MEDIAN
11. EXISTING CONCRETE CURB AND GUTTER
12. EXISTING AGGREGATE WEDGE SHOULDERS, TYPE B

A. PROPOSED HOT-MIX ASPHALT SURFACE REMOVAL, 2.50"
B. PROPOSED BINDER
C. PROPOSED HOT-MIX ASPHALT SURFACE COURSE,
D. PROPOSED HOT-MIX ASPHALT SHOULDERS
E. PROPOSED LONGITUDINAL JOINT SEALANT
F. PROPOSED AGGREGATE WEDGE TYPE-B
G. PROPOSED TACK COAT

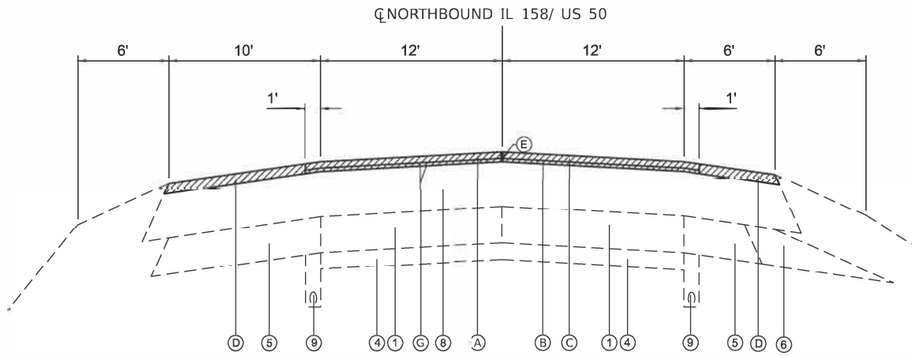

EXISTING NORTHBOUND TYPICAL SECTION

STA. 288+20 TO STA. 297+26
STA. 300+14 TO STA. 306+75

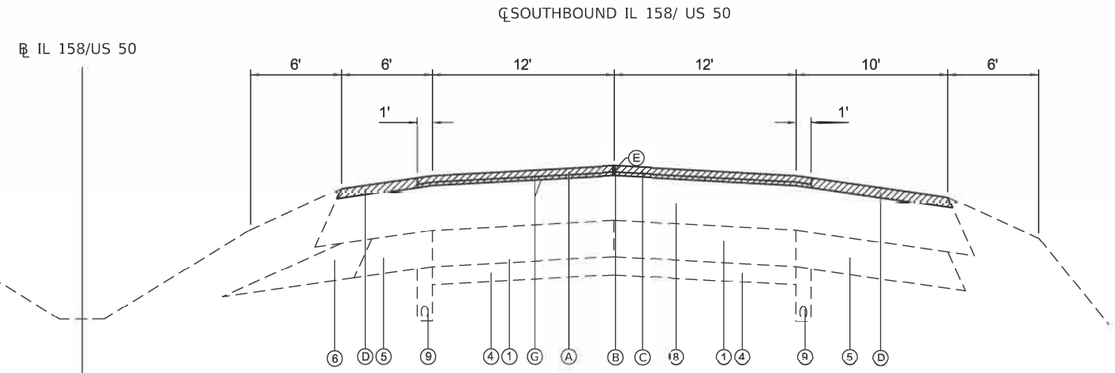

EXISTING SOUTHBOUND TYPICAL SECTION

STA. 289+10 TO STA. 297+33
STA. 299+95 TO STA. 307+00

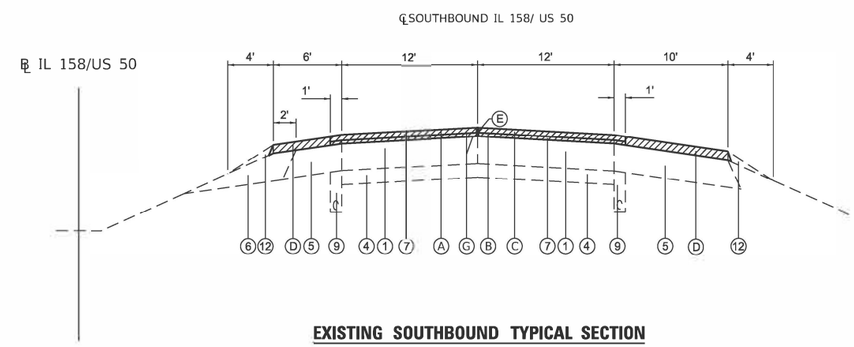

EXISTING SOUTHBOUND TYPICAL SECTION

STA. 336+50 TO STA. 343+00

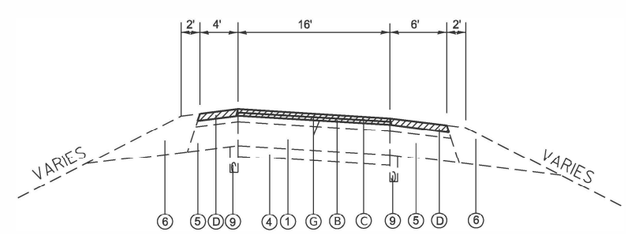

I-064 RAMPS TYPICAL

LEGEND

1. EXISTING PCC PAVEMENT 8"
2. EXISTING PAVEMENT (DEPTH UNKNOWN)
3. EXISTING CURB & GUTTER
4. EXISTING GRANULAR SUBBASE, 4"
5. EXISTING HOT-MIX ASPHALT SHOULDERS, 8"
6. EXISTING AGGREGATE SHOULDERS, 8"
7. EXISTING HOT-MIX ASPHALT RESURFACING
8. EXISTING HOT-MIX ASPHALT BINDER COURSE, VARIES 0"-19"
9. EXISTING PIPE UNDERDRAIN
10. EXISTING CONCRETE MEDIAN
11. EXISTING CONCRETE CURB AND GUTTER
12. EXISTING AGGREGATE WEDGE SHOULDERS, TYPE B

A. PROPOSED HOT-MIX ASPHALT SURFACE REMOVAL, 2.50"
B. PROPOSED BINDER
C. PROPOSED HOT-MIX ASPHALT SURFACE COURSE,
D. PROPOSED HOT-MIX ASPHALT SHOULDERS
E. PROPOSED LONGITUDINAL JOINT SEALANT
F. PROPOSED AGGREGATE WEDGE TYPE-B
G. PROPOSED TACK COAT

MODEL: Typical 9 [Sheet]
FILE NAME: c:\pw_work\pwidot\dintelman\d1085113\D876J62-Typicals.dgn

USER NAME = Jon.Dintelman	DESIGNED -	REVISED -	STATE OF ILLINOIS DEPARTMENT OF TRANSPORTATION
	DRAWN -	REVISED -	
	CHECKED -	REVISED -	
PLOT DATE = 2/26/2025	DATE -	REVISED -	

TYPICALS

SCALE: | SHEET Typical 9 OF SHEETS | STA. | TO STA.

F.A.P. RTE.	SECTION	COUNTY	TOTAL SHEETS	SHEET NO.
674	(31,410,410-1)RS-4, (82-7K)RS-1	ST. CLAIR	33	14

CONTRACT NO. 76J62

ILLINOIS | FED. AID PROJECT

MAINLINE CLASS A & PARTIAL DEPTH PATCHING SCHEDULE

MP (from directional Start)	R / L	Lane Designation Dir	Primary Lane	Joint/Half or Lane	Class	Prop. Patch Depth	Layout: Measurements Length 1	Length 2	Ave. Length	Width 1	Ave. Width	Layout Area	TY I(2)	TY II(3)	TY III(4)	TY IV(5)	SAW CUTS	PATCH. REINF.	TIE BARS	Long. PDP Rem. 3"	112 lbs/sy*in Long. PDP
						(in)	(ft)	(ft)	(ft)	(ft)	(ft)	(sq yd)	(sq yd)	(sq yd)	(sq yd)	(sq yd)	(ft)	(sq yd)	(each)	(ft)	(ton)
MP	/	LaneDir	PrmryLn	Jnt/LnHalf		PropDepth	LayL1	LayL2	LayLavg	LayW1	LayAvgW	LayArea	LayT1	LayT2	LayT3	LayT4				PDPRem	PDRon
0.0000	L	NB	STA															0.0			
0.2830	L	NB	DL	out	PDP	3	321.00		321.00	3.00	3.00	107.00								321.0	17.98
0.2830	L	NB	PL	out	PDP	3	90.00		90.00	3.00	3.00	30.00						0.0		90.0	0.56
0.2973	L	NB	STA															0.0			
0.3000	L	NB	DL	CL jnt	PDP	3	59.00		59.00	3.00	3.00	19.67								59.0	3.30
0.3010	L	NB	PL	out			6.00		6.00	6.00	6.00	4.00	4.0				36.0	4.0			
0.3021	L	NB	PL	out	PDP	3	190.00		190.00	3.00	3.00	63.33								190.0	10.64
0.3270	L	NB	DL	CL jnt	PDP	3	518.00		518.00	3.00	3.00	172.67								518.0	29.01
0.3440	L	NB	DL	out			35.00		35.00	6.00	6.00	23.33			23.3			23.3	10.0		
0.3506	L	NB	DL	out	PDP	3	275.00		275.00	3.00	3.00	91.67								275.0	15.40
0.3506	L	NB	PL	out	PDP	3	288.00		288.00	3.00	3.00	96.00								288.0	16.13
0.4025	L	NB	DL	out			13.00		13.00	6.00	6.00	8.67		8.7			50.0	8.7			
0.4050	L	NB	DL	out	PDP	3	40.00		40.00	3.00	3.00	13.33						0.0		40.0	2.24
0.4216	L	NB	DL				8.00		8.00	12.00	12.00	10.67		10.7			64.0	10.7			
0.4216	L	NB	PL	out	PDP	3	863.00		863.00	3.00	3.00	287.67								863.0	48.33
0.4232	L	NB	DL	out	PDP	3	773.00		773.00	3.00	3.00	257.67						0.0		773.0	43.29
0.6449	L	NB	DL				8.00		8.00	12.00	12.00	10.67		10.7			64.0	10.7			
0.6449	L	NB	PL	out	PDP	3	518.00		518.00	3.00	3.00	172.67								518.0	29.01
0.6720	L	NB	DL	out	PDP	3	22.00		22.00	3.00	3.00	7.33								22.0	1.23
0.7430	L	NB	DL				6.00		6.00	12.00	12.00	8.00		8.0			60.0	8.0			
0.7430	L	NB	PL				6.00		6.00	12.00	12.00	8.00		8.0			60.0	8.0			
0.7442	L	NB	DL	out	PDP	3	245.00		245.00	3.00	3.00	81.67								245.0	13.72
0.7442	L	NB	PL	out	PDP	3	44.00		44.00	3.00	3.00	14.67								44.0	2.46
0.7464	L	NB	DL	CL jnt	PDP	3	233.00		233.00	3.00	3.00	77.67								233.0	13.05
0.7519	L	NB	PL				6.00		6.00	12.00	12.00	8.00		8.0			60.0	8.0			
0.7531	L	NB	PL	out	PDP	3	198.00		198.00	3.00	3.00	66.00								198.0	11.09
1.1444	L	NB	DL				6.00		6.00	12.00	12.00	8.00		8.0			60.0	8.0			
1.1444	L	NB	PL				6.00		6.00	12.00	12.00	8.00		8.0			60.0	8.0			
1.1455	L	NB	DL		PDP	3	42.00		42.00	3.00	3.00	14.00								42.0	2.35
1.1455	L	NB	DL	CL jnt	PDP	3	1436.00		1436.00	3.00	3.00	478.67								1436.0	80.42
1.1455	L	NB	PL		PDP	3	59.00		59.00	3.00	3.00	19.67								59.0	3.30
1.1535	L	NB	DL				12.00		12.00	12.00	12.00	16.00			16.0		72.0	16.0			
1.1569	L	NB	DL				8.00		8.00	12.00	12.00	10.67		10.7			64.0	10.7			
1.1569	L	NB	PL				20.00		20.00	12.00	12.00	26.67				26.7	88.0	26.7			
1.1584	L	NB	DL		PDP	3	41.00		41.00	3.00	3.00	13.67								41.0	2.30
1.1605	L	NB	PL		PDP	3	23.00		23.00	3.00	3.00	7.67								23.0	1.29
1.1643	L	NB	PL				6.00		6.00	12.00	12.00	8.00		8.0			60.0	8.0			
1.1661	L	NB	DL				49.00		49.00	12.00	12.00	65.33				65.3	146.0	65.3	16.0		
1.1694	L	NB	PL				28.00		28.00	12.00	12.00	37.33				37.3	104.0	37.3	9.0		
1.1785	L	NB	DL	CL jnt	PDP	3	197.00		197.00	3.00	3.00	65.67								197.0	11.03
1.1785	L	NB	PL		PDP	3	954.00		954.00	3.00	3.00	318.00								954.0	53.42
1.1803	L	NB	DL				187.00		187.00	12.00	12.00	249.33				249.3	422.0	249.3	62.0		
1.2538	L	NB	STA															0.0			
1.3072	L	NB	DL	out	PDP	3	163.00		163.00	3.00	3.00	54.33								163.0	9.13
1.3381	L	NB	DL	out			118.00		118.00	6.00	6.00	78.67				78.7	260.0	78.7	30.0		
1.3485	L	NB	STA															0.0			
1.3591	L	NB	PL				57.00		57.00	12.00	12.00	76.00				76.0	162.0	76.0	19.0		
1.3629	L	NB	DL				37.00		37.00	12.00	12.00	49.33				49.3	122.0	49.3	12.0		
1.3699	L	NB	DL	out	PDP	3	47.00		47.00	3.00	3.00	15.67								47.0	2.63
1.3699	L	NB	PL	out	PDP	3	42.00		42.00	3.00	3.00	14.00								42.0	2.35
1.3779	L	NB	PL				10.00		10.00	12.00	12.00	13.33		13.3			68.0	13.3			
1.3796	L	NB	PL	out	PDP	3	37.00		37.00	3.00	3.00	12.33						0.0		37.0	2.07
1.3866	L	NB	DL				8.00		8.00	12.00	12.00	10.67		10.7			64.0	10.7			
1.3866	L	NB	PL				8.00		8.00	12.00	12.00	10.67		10.7			64.0	10.7			
1.3881	L	NB	PL	out	PDP	3	67.00		67.00	3.00	3.00	22.33								67.0	3.75
1.4419	L	NB	PL	out	PDP	3	59.00		59.00	3.00	3.00	19.67								59.0	3.30
1.4432	L	NB	STA															0.0			
1.5009	L	NB	PL	out	PDP	3	140.00		140.00	3.00	3.00	46.67								140.0	7.84
1.5273	L	NB	PL				41.00		8.00	6.00	6.00	5.33		5.3			106.0	5.3			
1.5351	L	NB	PL				60.00		8.00	12.00	12.00	10.67		10.7			168.0	10.7			
1.5387	L	NB	DL	out	PDP	3	60.00		60.00	3.00	3.00	20.00								60.0	3.36
1.5387	L	NB	PL	out	PDP	3	1337.00		1337.00	3.00	3.00	445.67								1337.0	74.87
1.7423	L	NB	DL	out	PDP	3	182.00		182.00	3.00	3.00	60.67								182.0	10.19
1.7919	L	NB	SURV															0.0			
1.9400	L	NB	DL				26.00		26.00	12.00	12.00	34.67				34.7	100.0	34.7	8.0		
1.9578	L	NB	DL				50.00		50.00	12.00	12.00	66.67				66.7	148.0	66.7	16.0		
2.0061	L	NB	DL				45.00		45.00	12.00	12.00	60.00				60.0	138.0	60.0	15.0		
2.1078	L	NB	SURV															0.0			
2.1078	L	NB	DL	CL jnt	PDP	3	913.00		913.00	3.00	3.00	304.33								913.0	51.13
2.1078	L	NB	PL	out	PDP	3	1255.00		1255.00	3.00	3.00	418.33								1255.0	70.28
2.1439	L	NB	STA															0.0			
2.1913	L	NB	STA															0.0			
2.2446	L	NB	DL	out			43.00		43.00	12.00	12.00	57.33				57.3	134.0	57.3	14.0		
2.5122	L	NB	DL	CL jnt	PDP	3	85.00		85.00	3.00	3.00	28.33								85.0	4.76
2.6105	L	NB	PL	out			34.00		34.00	6.00	6.00	22.67			22.7		92.0	22.7	11.0		
2.6192	L	NB	PL				30.00		30.00	12.00	12.00	40.00				40.0	108.0	40.0	10.0		
2.6249	L	NB	DL				31.00		31.00	12.00	12.00	41.33				41.3	110.0	41.3	10.0		
2.6249	L	NB	PL				23.00		23.00	6.00	6.00	15.33			15.3		70.0	15.3	7.0		
2.6970	L	NB	SURV														0.0	0.0			
3.0387	L	NB	SURV														0.0	0.0			
3.0737	L	NB	DL				6.00		6.00	12.00	12.00	8.00		8.0			60.0	8.0			
3.1089	L	NB	DL	out	PDP	3	524.00		524.00	3.00	3.00	174.67								524.0	29.34
3.1098	L	NB	STA															0.0			
3.3156	L	NB	DL	CL jnt	PDP	3	288.00		288.00	3.00	3.00	96.00								288.0	16.13
3.3247	L	NB	DL	out	PDP	3	68.00		68.00	3.00	3.00	22.67								68.0	3.81
3.3375	L	NB	DL				12.00		12.00	12.00	12.00	16.00			16.0		72.0	16.0			
3.3398	L	NB	DL	out	PDP	3	333.00		333.00	3.00	3.00	111.00								333.0	18.65
3.5107	L	NB	DL	out			8.00		8.00	6.00	6.00	5.33		5.3			40.0	5.3			
3.5265	L	NB	STA															0.0			
3.5107	L	NB	DL	out			8.00		8.00	6.00	6.00	5.33		5.3			40.0	5.3			
3.7982	L	NB	DL	out			15.00		15.00	6.00	6.00	10.00		10.0			54.0	10.0			

MAINLINE CLASS A & PARTIAL DEPTH PATCHING SCHEDULE

MP (from directional Start)	R / L	Lane Designation Dir	Primary Lane	Joint/Half or Lane	Class	Prop. Patch Depth	Layout: Measurements Length 1	Length 2	Ave. Length	Width 1	Ave. Width	Layout Area	TY I(2)	TY II(3)	TY III(4)	TY IV(5)	SAW CUTS	PATCH. REINF.	TIE BARS	Long. PDP Rem. 3"	112 lbs/sy*in Long. PDP
						(in)	(ft)	(ft)	(ft)	(ft)	(ft)	(sq yd)	(sq yd)	(sq yd)	(sq yd)	(sq yd)	(ft)	(sq yd)	(each)	(ft)	(ton)
MP	/	LaneDir	PrmryLn	Jnt/LnHalf		PropDepth	LayL1	LayL2	LayLavg	LayW1	LayAvgW	LayArea	LayT1	LayT2	LayT3	LayT4				PDPRem	PDRon
3.8101	L	NB	DL	out			6.00		6.00	12.00	12.00	8.00		8.0			60.0	8.0			
3.8209	L	NB	DL	out	PDP	3	100.00		100.00	3.00	3.00	33.33								100.0	5.60
3.8209	L	NB	DL	CL jnt	PDP	3	413.00		413.00	3.00	3.00	137.67								413.0	23.13
3.8398	L	NB	DL				14.00		14.00	12.00	12.00	18.67			18.7		76.0	18.7			
3.9131	L	NB	DL				6.00		6.00	12.00	12.00	8.00		8.0			60.0	8.0			
3.9432	L	NB	STA														0.0	0.0			
3.9953	L	NB	DL				22.00		22.00	6.00	6.00	14.67		14.7			68.0	14.7			
4.0042	L	NB	DL				97.00		97.00	6.00	6.00	64.67				64.7	218.0	64.7	32.0		
0.3854	R	SB	DL	out	PDP	3	45.00		45.00	3.00	3.00	15.00								45.0	2.52
0.3939	R	SB	DL				10.00		10.00	12.00	12.00	13.33		13.3			68.0	13.3			
0.3958	R	SB	DL	out	PDP	3	107.00		107.00	3.00	3.00	35.67								107.0	5.99
0.3958	R	SB	DL	out	PDP	3	107.00		107.00	3.00	3.00	35.67								107.0	5.99
0.4161	R	SB	DL	in			6.00		6.00	12.00	12.00	8.00		8.0			60.0	8.0			
0.4384	R	SB	DL				6.00		6.00	12.00	12.00	8.00		8.0			60.0	8.0			
0.4384	R	SB	PL				6.00		6.00	12.00	12.00	8.00		8.0			48.0	8.0			
0.4384	R	SB	SURV															0.0			
0.4748	R	SB	STA															0.0			
0.4919	R	SB	DL				6.00		6.00	12.00	12.00	8.00		8.0			60.0	8.0			
0.5127	R	SB	STA															4.0			
0.5273	R	SB	DL	CL jnt	PDP	3	743.00		743.00	3.00	3.00	247.67						0.0		743.0	41.61
0.7589	R	SB	DL	Ramp Edge	PDP	3	176.00		176.00	3.00	3.00	58.67								176.0	9.86
0.8157	R	SB	STA															4.0			
0.8511	R	SB	DL	out	PDP	3	377.00		377.00	3.00	3.00	125.67						0.0		377.0	2.35
0.9297	R	SB	STA															4.0			
0.9379	R	SB	DL	CL jnt	PDP	3	1056.00		1056.00	3.00	3.00	352.00								1056.0	59.14
0.9636	R	SB	DL	out	PDP	3	95.00		95.00	3.00	3.00	31.67								95.0	5.32
0.9816	R	SB	DL	out			12.00		12.00	6.00	6.00	8.00		8.0			48.0	8.0			
0.9839	R	SB	DL	out	PDP	3	40.00		40.00	3.00	3.00	13.33						0.0		40.0	2.24
0.9915	R	SB	DL	out			45.00		45.00	6.00	6.00	30.00				30.0	108.0	30.0	15.0		
1.0102	R	SB	DL	out			18.00		18.00	6.00	6.00	12.00		12.0			60.0	12.0			
1.1089	R	SB	DL	Ramp Edge	PDP	3	329.00		329.00	3.00	3.00	109.67						0.0		329.0	18.42
1.1576	R	SB	PL				18.00		18.00	12.00	12.00	24.00			24.0			24.0			
1.1712	R	SB	DL				74.00		74.00	14.70	14.15	116.34				116.3	206.8	116.3	25.0		
1.1799	R	SB	PL				80.00		80.00	12.00	12.00	106.67				106.7	208.0	106.7	26.0		
1.1919	R	SB	DL	in			6.00		6.00	6.00	6.00	4.00	4.0				36.0	4.0			
1.2066	R	SB	DL	in			6.00		6.00	6.00	6.00	4.00	4.0				36.0	4.0			
1.2121	R	SB	DL	out			6.00		6.00	6.00	6.00	4.00	4.0				36.0	4.0			
1.2239	R	SB	DL	in			8.00		8.00	6.00	6.00	5.33		5.3			40.0	5.3			
1.2303	R	SB	DL				6.00		6.00	12.00	12.00	8.00		8.0			60.0	8.0			
1.2303	R	SB	PL				6.00		6.00	12.00	12.00	8.00		8.0			60.0	8.0			
1.2364	R	SB	STA														0.0	0.0			
1.2371	R	SB	DL				6.00		6.00	12.00	12.00	8.00		8.0			60.0	8.0			
1.2371	R	SB	PL				6.00		6.00	12.00	12.00	8.00		8.0			60.0	8.0			
1.2608	R	SB	DL				13.00		13.00	12.00	12.00	17.33			17.3		74.0	17.3			
1.2608	R	SB	PL				8.00		8.00	12.00	12.00	10.67		10.7			64.0	10.7			
1.2726	R	SB	DL	CL jnt	PDP	3	147.00		147.00	3.00	3.00	49.00						0.0		147.0	8.23
1.2742	R	SB	STA															0.0			
1.2797	R	SB	DL	in			8.00		8.00	6.00	6.00	5.33		5.3			40.0	5.3			
1.3004	R	SB	DL				8.00		8.00	6.00	6.00	5.33		5.3			40.0	5.3			
1.3028	R	SB	PL				18.00		18.00	12.00	12.00	24.00			24.0		84.0	24.0			
1.3085	R	SB	DL				36.00		36.00	12.00	12.00	48.00				48.0	120.0	48.0	12.0		
1.3294	R	SB	DL	CL jnt	PDP	3	293.00		293.00	3.00	3.00	97.67								293.0	16.41
1.3320	R	SB	DL	out	PDP	3	97.00		97.00	3.00	3.00	32.33								97.0	5.43
1.3415	R	SB	DL	in			6.00		6.00	12.00	12.00	8.00		8.0			60.0	8.0			
1.3504	R	SB	STA															0.0			
1.3504	R	SB	DL				25.00		25.00	12.00	12.00	33.33				33.3	98.0	33.3	8.0		
1.3551	R	SB	DL	out	PDP	3	157.00		157.00	3.00	3.00	52.33								157.0	8.79
1.3848	R	SB	SURV															0.0			
1.6019	R	SB	PL				6.00		6.00	12.00	12.00	8.00		8.0			60.0	8.0			
1.6305	R	SB	PL				10.00		10.00	12.00	12.00	13.33		13.3			68.0	13.3			
1.6324	R	SB	DL				20.00		20.00	12.00	12.00	26.67				26.7	88.0	26.7			
1.6896	R	SB	PL				6.00		6.00	12.00	12.00	8.00		8.0			60.0	8.0			
1.7258	R	SB	SURV														0.0	0.0			
1.7258	R	SB	PL	out			34.00		34.00	6.00	6.00	22.67			22.7		92.0	22.7	10.0		
1.7309	R	SB	DL				10.00		10.00	12.00	12.00	13.33		13.3			68.0	13.3			
1.7322	R	SB	PL	in			60.00		60.00	6.00	6.00	40.00				40.0	144.0	40.0	20.0		
1.7328	R	SB	PL	in			35.00		35.00	6.00	6.00	23.33			23.3		94.0	23.3	11.0		
1.7400	R	SB	STA															0.0			
1.7436	R	SB	PL	out	PDP	3	55.00		55.00	3.00	3.00	18.33								55.0	3.08
1.7477	R	SB	DL	out	PDP	3	78.00		78.00	3.00	3.00	26.00								78.0	4.37
1.7625	R	SB	DL	out			15.00		15.00	6.00	6.00	10.00		10.0			54.0	10.0			
1.7733	R	SB	DL				84.00		84.00	12.00	12.00	112.00				112.0	216.0	112.0	28.0		
1.7733	R	SB	PL				71.00		71.00	12.00	12.00	94.67				94.7	190.0	94.7	24.0		
1.7875	R	SB	STA														0.0	0.0			
1.7989	R	SB	DL				98.00		98.00	12.00	12.00	130.67				130.7	244.0	130.7	33.0		
1.7989	R	SB	PL	in	PDP	3	135.00		135.00	3.00	3.00	45.00								135.0	7.56
1.8174	R	SB	DL	in			117.00		117.00	6.00	6.00	78.00				78.0	258.0	78.0	39.0		
1.8352	R	SB	STA															0.0			
1.8375	R	SB	PL	out	PDP	3	170.00		170.00	3.00	3.00	56.67								170.0	9.52
1.8659	R	SB	DL				82.00		82.00	12.00	12.00	109.33				109.3	212.0	109.3	27.0		
1.8828	R	SB	STA																		

MODEL: Patching Full Depth [Sheet]
FILE NAME: c:\pw_work\pwidot\dintelman\jnd1061113\D876J62-Typicals.dgn

USER NAME = Jon.Dintelman	DESIGNED -	REVISED -	STATE OF ILLINOIS DEPARTMENT OF TRANSPORTATION
	DRAWN -	REVISED -	
	CHECKED -	REVISED -	
PLOT DATE = 3/7/2025	DATE -	REVISED -	

PATCHING SCHEDULES

SCALE: | SHEET Patching Full Depth | SHEETS | STA. | TO STA.

F.A.P. RTE.	SECTION	COUNTY	TOTAL SHEETS	SHEET NO.
674	(31,410,410-1)RS-4, (82-7K)RS-1	ST. CLAIR	33	15

CONTRACT NO. 76J62

ILLINOIS | FED. AID PROJECT

MAINLINE CLASS A & PARTIAL DEPTH PATCHING SCHEDULE

MP (from directional Start)	R / L	Lane Designation Dir	Lane Designation Primary Lane	Lane Designation Joint/Half of Lane	Class	Prop. Patch Depth	Layout Measurements Length 1	Length 2	Ave. Length	Width 1	Ave. Width	Layout Area	TY I(2)	TY II(3)	TY III(4)	TY IV(5)	SAW CUTS	PATCH. REINF.	TIE BARS	Long. PDP Rem. 3"	112 lbs/sy*in Long. PDP
						(in)	(ft)	(ft)	(ft)	(ft)	(ft)	(sq yd)	(sq yd)	(sq yd)	(sq yd)	(sq yd)	(ft)	(sq yd)	(each)	(ft)	(ton)
MP	/	LaneDir	PrmryLn	Jnt/LnHalf	Class	PropDepth	LayL1	LayL2	LayLavg	LayW1	LayAvgW	LayArea	LayT1	LayT2	LayT3	LayT4				PDPRem	PDPton
1.8936	R	SB	DL				44.00		44.00	12.00	12.00	58.67				58.7	136.0	58.7			
1.9051	R	SB	DL	CL jnt	PDP	3	307.00		307.00	3.00	3.00	102.33								307.0	17.19
1.9778	R	SB	STA															0.0			
2.0110	R	SB	PL	out	PDP	3	337.00		337.00	3.00	3.00	112.33								337.0	18.87
2.0256	R	SB	STA															0.0			
2.0530	R	SB	DL	out	PDP	3	97.00		97.00	3.00	3.00	32.33								97.0	5.43
2.0729	R	SB	STA																		
2.1205	R	SB	STA																		
2.1468	R	SB	PL	out	PDP	3	215.00		215.00	3.00	3.00	71.67								215.0	12.04
2.6214	R	SB	DL				64.00		64.00	12.00	12.00	85.33				85.3	176.0	85.3	30.0		
2.6214	R	SB	PL				51.00		51.00	12.00	12.00	68.00				68.0	150.0	68.0	17.0		
2.6311	R	SB	PL	out	PDP	3	36.00		36.00	3.00	3.00	12.00					81.0	0.0		36.0	0.22
2.6718	R	SB	STA														0.0	0.0			
2.6746	R	SB	PL				8.00		8.00	12.00	12.00	10.67		10.7			64.0	10.7			
2.6814	R	SB	DL	CL jnt	PDP	3	2365.00		2365.00	3.00	3.00	788.33								2365.0	132.44
2.6881	R	SB	DL				10.00		10.00	12.00	12.00	13.33		13.3			68.0	13.3			
2.7034	R	SB	DL	out	PDP	3	163.00		163.00	3.00	3.00	54.33								163.0	9.13
2.7197	R	SB	STA															0.0			
2.7384	R	SB	PL	out	PDP	3	704.00		704.00	3.00	3.00	234.67								704.0	39.42
2.7951	R	SB	DL	out	PDP	3	199.00		199.00	3.00	3.00	66.33								199.0	11.14
																		0.0			
2.8328	R	SB	DL	out			8.00		8.00	6.00	6.00	5.33		5.3			40.0	5.3			
2.8343	R	SB	DL	out	PDP	3	198.00		198.00	3.00	3.00	66.00								198.0	11.09
2.8640	R	SB	STA															0.0			
2.9085	R	SB	PL	out	PDP	3	293.00		293.00	3.00	3.00	97.67								293.0	16.41
2.9487	R	SB	DL	out	PDP	3	26.00		26.00	3.00	3.00	8.67								26.0	1.46
2.9536	R	SB	DL	out			12.00		12.00	6.00	6.00	8.00		8.0			48.0	8.0			
2.9559	R	SB	DL	out	PDP	3	50.00		50.00	3.00	3.00	16.67								50.0	2.80
2.9936	R	SB	DL	out	PDP	3	135.00		135.00	3.00	3.00	45.00								135.0	7.56
2.9936	R	SB	PL	out	PDP	3	225.00		225.00	3.00	3.00	75.00								225.0	12.60
3.0080	R	SB	STA																		
3.0402	R	SB	PL	out			181.00		181.00	6.00	6.00	120.67				120.7	386.0	120.7	60.0		
3.0744	R	SB	DL	out			65.00		65.00	12.00	12.00	86.67				86.7	178.0	86.7	21.0		
3.0744	R	SB	PL	out			65.00		65.00	12.00	12.00	86.67				86.7	178.0	86.7	21.0		
3.0981	R	SB	PL	out	PDP	3	604.00		604.00	3.00	3.00	201.33								604.0	33.82
3.1042	R	SB	STA																		
3.2318	R	SB	DL				6.00		6.00	12.00	12.00	8.00		8.0			60.0	8.0			
3.2318	R	SB	PL				6.00		6.00	12.00	12.00	8.00		8.0			60.0	8.0			
3.2742	R	SB	DL	CL jnt	PDP	3	75.00		75.00	3.00	3.00	25.00								75.0	4.20
3.2782	R	SB	PL	out	PDP	3	54.00		54.00	3.00	3.00	18.00								54.0	3.02
3.6297	R	SB	DL	out	PDP	3	384.00		384.00	3.00	3.00	128.00								384.0	21.50
3.6297	R	SB	PL	out	PDP	3	295.00		295.00	3.00	3.00	98.33								295.0	16.52
3.7292	R	SB	PL	out	PDP	3	89.00		89.00	3.00	3.00	29.67								89.0	4.98
3.7350	R	SB	STA																		
3.7922	R	SB	DL	out	PDP	3	55.00		55.00	3.00	3.00	18.33								55.0	3.08
3.7922	R	SB	PL	out	PDP	3	498.00		498.00	3.00	3.00	166.00								498.0	27.89
3.8313	R	SB	STA																		
3.8866	R	SB	DL	out			46.00		46.00	12.00	12.00	61.33				61.3	140.0	61.3	15.0		
3.8866	R	SB	PL	out			46.00		46.00	12.00	12.00	61.33				61.3	140.0	61.3	15.0		
3.8951	R	SB	PL	out	PDP	3	179.00		179.00	3.00	3.00	59.67								179.0	10.02
3.9475	R	SB	DL	out	PDP	3	199.00		199.00	3.00	3.00	66.33								199.0	11.14
3.9612	R	SB	PL	out	PDP	3	98.00		98.00	3.00	3.00	32.67								98.0	5.49
4.0358	R	SB	PL	out	PDP	3	139.00		139.00	3.00	3.00	46.33								139.0	7.78
4.0525	R	SB	DL				23.00		23.00	12.00	12.00	30.67				30.7	94.0	30.7	8.0		
4.0712	R	SB	STA																		
4.1778	R	SB	PL	out	PDP	3	91.00		91.00	3.00	3.00	30.33								91.0	5.10
SUB-TOTALS													16.00	436.60	239.30	2532.40	10029.80	3236.30	746.00	25859.00	1423.07
ANTICIPATED FAILURES 30%													4.80	130.98	71.79	759.72	3008.94	970.89	223.80	7757.70	426.92
TOTALS													21	568	311	3292	13039	4207	970	33617	1850

I–64 RAMPS CLASS A & PARTIAL DEPTH PATCHING SCHEDULE

MP (from directional Start)	Lane Designation Dir	Lane Designation Primary Lane	Exist PVT Mat'l	Layout Measurements Length 1	Ave. Length	Width 1	Ave. Width	Layout Area	TY II(3)	TY III(4)	TY IV(5)	SAW CUTS	PATCH. REINF.	TIE BARS
				(ft)	(ft)	(ft)	(ft)	(sq yd)	(sq yd)	(sq yd)	(sq yd)	(ft)	(sq yd)	(each)
MP	LaneDir	PrmryLn	ExtPvtMatl	LayL1	LayLavg	LayW1	LayAvgW	LayArea	LayT2	LayT3	LayT4			
0.1443	WB-SB	Ramp	HMA	6.00	6.00	16.00	16.00	10.67	10.7			76.0	10.7	
0.2513	WB-SB	Ramp	HMA/PCC	30.00	30.00	16.00	16.00	53.33			53.3	124.0	53.3	14.00
0.2689	WB-SB	Ramp	PCC	12.00	12.00	16.00	16.00	21.33		21.3		88.0	21.3	
0.0000	SB EB	Ramp	PCC	51.00	51.00	15.00	15.00	85.00			85.0	162.0	85.0	24.50
0.0396	SB EB	Ramp	PCC	96.00	96.00	15.00	15.50	165.33			165.3	252.0	165.3	47.00
0.0981	SB EB	Ramp	HMA	6.00	6.00	16.00	16.00	10.67	10.7			76.0	10.7	
0.1299	EB NB	Ramp	HMA	55.00	55.00	16.00	16.00	97.78			97.8	174.0	97.8	26.50
0.1403	EB NB	Ramp	HMA	223.00	223.00	16.00	16.00	396.44			396.4	510.0	396.4	110.50
0.1964	EB NB	Ramp	HMA	129.00	129.00	8.00	8.00	114.67			114.7	290.0	114.7	63.50
0.2481	EB NB	Ramp	PCC	56.00	56.00	16.00	15.50	96.44			96.4	176.0	96.4	27.00
0.2672	EB NB	Ramp	PCC	48.00	48.00	15.00	15.00	80.00			80.0	156.0	80.0	23.00
0.0835	SB WB	Ramp	PCC	6.00	6.00	16.00	16.00	10.67	10.7			76.0	10.7	
0.1053	SB WB	Ramp	HMA	42.00	42.00	16.00	16.00	74.67			74.7	140.0	74.7	20.00
0.3487	SB WB	Ramp	HMA	8.00	8.00	8.00	8.00	7.11	7.1			48.0	7.1	
0.4686	SB WB	Ramp	HMA	6.00	6.00	8.00	8.00	5.33	5.3			44.0	5.3	
0.8161	EB SB	Ramp	PCC	10.00	10.00	8.00	8.00	8.89	8.9			52.0	8.9	
0.8288	EB SB	Ramp	PCC	15.00	15.00	15.00	15.00	25.00			25.0	90.0	25.0	
0.8682	EB SB	Ramp	PCC	14.00	14.00	15.00	15.00	23.33		23.3		88.0	23.3	
0.8765	EB SB	Ramp	PCC	62.00	62.00	15.00	15.00	103.33			103.3	184.0	103.3	30.00
0.9241	EB SB	Ramp	PCC	147.00	147.00	13.00	11.10	181.30			181.3	346.0	181.3	72.50
0.0689	NB EB	Ramp	PCC	17.00	17.00	15.00	15.00	28.33			28.3	94.0	28.3	
0.0790	NB EB	Ramp	PCC	34.00	34.00	15.00	15.00	56.67			56.7	128.0	56.7	16.00
0.0909	NB EB	Ramp	PCC	6.00	6.00	15.00	15.00	10.00	10.0			72.0	10.0	
0.1250	NB EB	Ramp	PCC	6.00	6.00	15.00	15.00	10.00	10.0			72.0	10.0	
0.0886	WB NB	Ramp	HMA	6.00	6.00	16.00	16.00	10.67	10.7			76.0	10.7	
0.4551	WB NB	Ramp	PCC	94.00	94.00	15.00	15.00	156.67			156.7	248.0	156.7	46.00
0.4900	WB NB	Ramp	PCC	41.00	41.00	15.00	15.00	68.33			68.3	142.0	68.3	19.50
SUB-TOTALS									73	23	1480	3290	1576	455
ANTICIPATED FAILURES 30%									22	7	444	987	473	136
TOTALS									95	30	1923	4277	2049	591

MODEL: Patching Full Depth-2 [Sheet]
FILE NAME: c:\pw_work\pwidot\dintelman\jnd10611\13D876J62-Typicals.dgn

USER NAME = Jon.DIntelman	DESIGNED -	REVISED -	STATE OF ILLINOIS DEPARTMENT OF TRANSPORTATION
	DRAWN -	REVISED -	
	CHECKED -	REVISED -	
PLOT DATE = 3/7/2025	DATE -	REVISED -	

PATCHING SCHEDULES

SCALE: SHEET Patching Full Depth-2 SHEETS STA. TO STA.

F.A.P. RTE.	SECTION	COUNTY	TOTAL SHEETS	SHEET NO.
674	(31,410,410-1)RS-4, (82-7K)RS-1	ST. CLAIR	33	16
		CONTRACT NO. 76J62		
	ILLINOIS	FED. AID PROJECT		

RESURFACING SCHEDULE

LOCATION			SB/NB	HMA SURFACE REMOVAL, 2 1/2"	CONC. SURFACE REMOVAL, 1/2"	POLY BIT. MAT'L (TACK COAT)	HMA BINDER, 1"	HMA SURFACE COURSE, 1.5"	LONGITUDINAL JOINT SEALER
				(SQ YD)	(SQ YD)	(POUND)	(TON)	(TON)	(FOOT)
STA.	TO	STA.							
MAINLINE									
115+93	TO	116+52	NB	587		528.05	41.07	49.28	177.00
116+52	TO	128+73	NB	4884		4395.60	341.88	410.26	3663.00
128+73	TO	137+21	NB	3298		2968.00	230.84	277.01	2544.00
137+21	TO	140+31	NB		1722	1550.00	120.56	144.67	310.00
140+31	TO	148+57	NB		2203	1982.40	154.19	185.02	826.00
148+57	TO	149+75	NB		433	389.40	30.29	36.34	118.00
149+75	TO	150+55	NB		347	312.00	24.27	29.12	160.00
150+55	TO	152+34	NB		716	644.40	50.12	60.14	358.00
154+86	TO	156+00	NB		456	410.40	31.92	38.30	114.00
156+00	TO	157+50	NB		858	772.50	60.08	72.10	150.00
157+50	TO	167+10	NB		2560	2304.00	179.20	215.04	960.00
167+10	TO	174+08	NB		3296	2966.50	230.73	276.87	698.00
174+08	TO	188+80	NB		3925	3532.80	274.77	329.73	1472.00
188+80	TO	197+63	NB	2551		2295.80	178.56	214.27	883.00
197+63	TO	198+00	NB	255		229.40	17.84	21.41	37.00
198+00	TO	203+95	NB	1719		1547.00	120.32	144.39	595.00
203+95	TO	206+82	NB	1020		918.40	71.43	85.72	287.00
206+82	TO	234+00	NB		7248	6523.20	507.36	608.83	2718.00
234+00	TO	237+70	NB		1233	1110.00	86.33	103.60	370.00
237+70	TO	244+47	NB	2708		2437.20	189.56	227.47	1354.00
244+47	TO	245+77	NB	376		338.00	26.29	31.55	260.00
245+77	TO	247+00	NB	847	847	762.60	59.31	71.18	246.00
247+00	TO	252+85	NB	1690		1521.00	118.30	141.96	585.00
252+85	TO	254+35	NB	517		465.00	36.17	43.40	150.00
254+35	TO	275+00	NB		5507	4956.00	385.47	462.56	2065.00
275+00	TO	275+80	NB		533	480.00	37.33	44.80	80.00
275+80	TO	276+58	NB		208	187.20	14.56	17.47	78.00
276+58	TO	278+84	NB		904	813.60	63.28	75.94	452.00
278+84	TO	281+50	NB		887	798.00	62.07	74.48	266.00
281+50	TO	288+20	NB		1787	1608.00	125.07	150.08	670.00
288+20	TO	297+41	NB	2661		2394.60	186.25	223.50	921.00
300+03	TO	306+75	NB	1941		1747.20	135.89	163.07	672.00
306+75	TO	333+25	NB		7067	6360.00	494.67	593.60	2650.00
333+25	TO	348+20	NB	4319		3887.00	302.32	362.79	1495.00
I-064 RAMPS									
140+31 NB IL 158			NB	3449		3104.00	241.42	289.71	1940.00
148+57 WB I-64			NB	2084		1875.20	145.85	175.02	1172.00
157+50 NB IL 158			NB	3120		2808.00	218.40	262.08	1755.00
167+10 EBI-64			NB	3120		2808.00	218.40	262.08	1755.00
TURN LANES									
198+00	TO	203+93	NB	922	922	830.20	64.57	77.49	593.00
247+00	TO	252+85	NB	910	910	819.00	63.70	76.44	585.00
SIDE ROADS									
METRO PLAZA LN					1300	1170.00	91.00	109.20	
SUB TOTALS				42977	45869	77550	6032	7238	36184

NOTE: RESURFACING OF METRO PLAZA DRIVE SHALL CONTINUE TO THE RADIUS RETURNS FOR BOTH LANES.

RESURFACING SCHEDULE

LOCATION			SB/NB	HMA SURFACE REMOVAL, 2 1/2"	CONC. SURFACE REMOVAL, 1/2"	POLY BIT. MAT'L (TACK COAT)	HMA BINDER, 1.25"	HMA SURFACE COURSE, 1.5"	LONGITUDINAL JOINT SEALER
				(SQ YD)	(SQ YD)	(POUND)	(TON)	(TON)	(FOOT)
STA.	TO	STA.							
MAINLINE									
115+93	TO	116+52	SB	184		165.20	12.85	15.42	59.00
116+52	TO	133+34	SB	4485		4036.80	313.97	376.77	1682.00
133+34	TO	134+67	SB	414		372.40	28.96	34.76	133.00
134+67	TO	140+20	SB		2888	2599.10	202.15	242.58	553.00
140+20	TO	149+78	SB		2555	2299.20	178.83	214.59	958.00
149+78	TO	151+22	SB		800	720.00	56.00	67.20	144.00
151+22	TO	152+34	SB	622		560.00	43.56	52.27	224.00
154+86	TO	156+00	SB	633		570.00	44.33	53.20	114.00
156+00	TO	158+50	SB		1556	1400.00	108.89	130.67	250.00
158+50	TO	166+77	SB		2205	1984.80	154.37	185.25	827.00
166+77	TO	178+07	SB		5148	4633.00	360.34	432.41	1130.00
178+07	TO	188+80	SB		2861	2575.20	200.29	240.35	1073.00
188+80	TO	192+10	SB	1173		1056.00	82.13	98.56	330.00
192+10	TO	197+63	SB	1598		1437.80	111.83	134.19	553.00
197+63	TO	198+00	SB	247		222.00	17.27	20.72	37.00
198+00	TO	206+82	SB	2548		2293.20	178.36	214.03	882.00
206+82	TO	235+42	SB		7627	6864.00	533.87	640.64	2860.00
235+42	TO	237+00	SB		597	537.20	41.78	50.14	158.00
237+00	TO	245+77	SB	2534		2280.20	177.35	212.82	877.00
245+77	TO	247+00	SB	820		738.00	57.40	68.88	123.00
247+00	TO	254+35	SB	2123		1911.00	148.63	178.36	735.00
254+35	TO	268+65	SB		3813	3432.00	266.93	320.32	1430.00
268+65	TO	271+41	SB		1165	1048.80	81.57	97.89	276.00
271+41	TO	275+14	SB		995	895.20	69.63	83.55	373.00
275+14	TO	275+98	SB		560	504.00	39.20	47.04	84.00
275+98	TO	277+10	SB		448	403.20	31.36	37.63	112.00
277+10	TO	289+15	SB			2892.00	224.93	269.92	1205.00
289+15	TO	297+41	SB	2386		2147.60	167.04	200.44	826.00
300+03	TO	307+10	SB	2042		1838.20	142.97	171.57	707.00
307+10	TO	336+50	SB		7840	7056.00	548.80	658.56	2940.00
336+50	TO	343+00	SB	1878		1690.00	131.44	157.73	650.00
I-064 RAMPS									
140+20 WB I-64				3111		2800.00	217.78	261.33	
149+78 SB 158				1920		1728.00	134.40	161.28	
158+50 EB I-64				2098		1888.00	146.84	176.21	
166+78 SB 158				3502		3152.00	245.16	294.19	
TURN LANES									
192+10	TO	197+63		860		774.20	60.22	72.26	
237+70	TO	245+77		1973		1775.40	138.09	165.70	807.00
271+41	TO	275+14			580	522.20	40.62	48.74	
SUB TOTALS				37151	41638	73802	5740	6888	23112

LOCATION	HMA SURFACE REMOVAL, 2 1/2"	CONC. SURFACE REMOVAL, 1/2"	POLY BIT. MAT'L (TACK COAT)	HMA BINDER, 1.25"	HMA SURFACE COURSE, 1.5"	LONGITUDINAL JOINT SEALER
	(SQ YD)	(SQ YD)	(POUND)	(TON)	(TON)	(FOOT)
NB SUB-TOTALS	31205	45869	66954	5208	6249	29562
SB SUB-TOTALS	26520	41638	64234	4996	5995	23112
I-064 RAMPS	22404		20163	1568	1882	6622
GRAND TOTALS	80128	87507	151352	11772	14126	59296

MODEL: Pavement Patching [Sheet]
FILE NAME: c:\pw_work\pwidot\dintelman\d1061113\D876J62-typicals.dgn

USER NAME = Jon.Dintelman	DESIGNED -	REVISED -	STATE OF ILLINOIS DEPARTMENT OF TRANSPORTATION
	DRAWN -	REVISED -	
	CHECKED -	REVISED -	
PLOT DATE = 2/14/2025	DATE -	REVISED -	

RESURFACING SCHEDULE

SCALE: SHEET Pavement Patching SHEETS STA. TO STA.

F.A.P. RTE.	SECTION	COUNTY	TOTAL SHEETS	SHEET NO.
674	(31,410,410-1)RS-4, (82-7K)RS-1	ST. CLAIR	33	17
		CONTRACT NO. 76J72		
	ILLINOIS	FED. AID PROJECT		

SHOULDER SCHEDULE

LOCATION			SB/NB	HMA SURFACE REMOVAL, 2.5"	BIT. MAT'L (TACK COAT)	HMA SHOULDERS 2.75"	SHOULDER RUMBLE STRIP 16"	AGG. WEDGE SHOULDERS, TYPE B
				(SQ YD)	(POUND)	(TON)	(FOOT)	
STA.	TO	STA.						
MAINLINE								
115+93	TO	128+73	NB	427	288.00	65.71	2560.00	22.81
128+73	TO	135+53	NB	604	408.00	93.08	1360.00	12.12
135+53	TO	137+21	NB	224	151.20	34.50	336.00	2.99
137+21	TO	151+25	NB		1684.80	384.38	2808.00	25.02
151+25	TO	152+34	NB	145	98.10	22.38	218.00	1.94
154+86	TO	156+00	NB		102.60	23.41	228.00	2.03
156+00	TO	188+80	NB		3936.00	897.99	6560.00	58.46
188+80	TO	197+63	NB	1177	794.70		1766.00	15.74
198+00	TO	202+08	NB	816	550.80	125.66	816.00	7.27
202+08	TO	206+82	NB	527	355.50	81.11	948.00	8.45
206+82	TO	234+00	NB		3261.60	744.13	5436.00	48.44
234+00	TO	237+70	NB		277.50	63.31	740.00	6.59
237+70	TO	240+12	NB	269	181.50	41.41	484.00	4.31
240+12	TO	245+77	NB	628	423.75	96.68	1130.00	10.07
247+00	TO	251+10	NB	729	492.00		820.00	7.31
251+10	TO	254+35	NB	361	243.75	55.61	650.00	5.79
254+35	TO	273+80	NB		2334.00	532.50	3890.00	34.67
275+80	TO	281+50	NB		427.50	97.53	1140.00	10.16
281+50	TO	282+20	NB		52.50	11.98	140.00	1.25
282+20	TO	297+41	NB	2704	1825.20	416.42	3042.00	27.11
300+03	TO	306+75	NB	1195	806.40	183.98	1344.00	11.98
306+75	TO	333+25	NB		3180.00	725.51	5300.00	47.23
333+25	TO	348+20	NB				2990.00	26.65
I-064 RAMPS								
140+31 NB IL 111			NB	2156	1455.00	331.96	3880.00	34.58
148+57 WB I-64			NB	1302	879.00	200.54	2344.00	20.89
157+50 NB IL 158			NB	1950	1316.25	300.30	3510.00	31.28
167+10 EB IL 111			NB	1950	1316.25	300.30	3510.00	31.28
TURN LANES								
198+00	TO	203+93	NB	791	533.70	121.76		10.57
247+00	TO	252+85	NB	390	263.25	60.06		10.43
TOTAL				18344	27639	6012	57950	537

SHOULDER SCHEDULE

LOCATION			SB/NB	HMA SURFACE REMOVAL, 2.5"	BIT. MAT'L (TACK COAT)	HMA SHOULDERS 2.75"	SHOULDER RUMBLE STRIP 16"	AGG. WEDGE SHOULDERS, TYPE B
				(SQ YD)	(POUND)	(TON)	(FOOT)	(TON)
STA.	TO	STA.						
MAINLINE								
115+93	TO	118+68	SB	183	123.75	28.23	550	4.90
118+68	TO	123+16	SB	299	201.60	45.99	896	7.98
124+27	TO	128+73	SB	149	100.35	22.89	892	7.95
128+73	TO	133+34	SB	256	172.88	39.44	922	8.22
133+34	TO	134+67	SB	177	119.70	27.31	266	2.37
134+67	TO	151+22	SB		1986.00	453.10	3310	29.50
151+22	TO	152+34	SB	149	100.80	23.00	224	2.00
154+86	TO	156+00	SB	152	102.60	23.41	228	2.03
156+00	TO	158+50	SB		225.00	51.33	500	4.46
158+50	TO	178+07	SB		2275.01	519.04	3914	34.88
178+07	TO	188+80	SB		1287.60	293.76	2146	19.12
188+80	TO	194+50	SB	1013	684.00	156.05	1140	10.16
194+50	TO	197+63	SB	626	422.55	96.40	626	5.58
198+80	TO	202+08	SB	583	393.60	89.80	656	5.85
202+08	TO	206+82	SB	843	568.80	129.77	948	8.45
206+82	TO	235+42	SB		3432.00	783.00	5720	50.97
235+42	TO	237+70	SB		239.40	54.62	456	4.06
237+70	TO	240+12	SB	376	254.10	57.97	484	4.31
240+12	TO	242+37	SB	250	168.75	38.50	450	4.01
242+37	TO	245+77	SB	680	459.00	104.72	680	6.06
247+00	TO	249+00	SB	400	270.00	61.60	400	3.56
249+00	TO	254+35	SB	951	642.00	146.47	1070	9.54
254+35	TO	268+65	SB		1716.00	391.50	2860	25.49
268+65	TO	271+35	SB		283.50	64.68	540	4.81
271+35	TO	275+00	SB		438.00	99.93	730	6.51
275+80	TO	289+15	SB		1602.00	365.49	2670	23.79
289+15	TO	297+41	SB	1468	991.20	226.14	1652	14.72
300+03	TO	307+10	SB	1257	848.40	193.56	1414	12.60
307+10	TO	336+50	SB		3528.00	804.91	5880	52.40
336+50	TO	343+00	SB	1156	780.00	177.96	1300	11.58
I-064 RAMPS								
140+20 WB I-64			SB	2156	1455.00	331.96	3880	34.58
149+78 SB 158			SB	1302	879.00	200.54	2344	20.89
158+50 EB I-64			SB	1950	1316.25	300.30	3510	31.28
166+78 SB 158			SB	1950	1316.25	300.30	3510	31.28
TURN LANES								
192+10	TO	197+63	SB	184	124.43	28.39		9.86
237+70	TO	240+12	SB	108	72.60	16.56		4.31
271+41	TO	273+80	SB					4.26
TOTAL				18619	29580	6749	56768	524

LOCATION	HMA SURFACE REMOVAL, 2.5"	BIT. MAT'L (TACK COAT)	HMA SHOULDERS 2.75"	SHOULDER RUMBLE STRIP 16"	AGG. WEDGE SHOULDERS, TYPE B
	(SQ YD)	(POUND)	(TON)	(FOOT)	(TON)
NB SUB-TOTALS	10986	22672	4879	44706	419
SB SUB-TOTALS	11261	24614	5616	43524	406
I-064 RAMPS	14716	9933	2266	26488	236
GRAND TOTALS	36963	57219	12761	114718	1062

MODEL: Shoulder Sched. [Sheet]
FILE NAME: c:\pw_work\pwidot\dintelman\d1061113\D876J62-Typicals.dgn

USER NAME = Jon.Dintelman	DESIGNED -	REVISED -	
	DRAWN -	REVISED -	
	CHECKED -	REVISED -	
PLOT DATE = 2/14/2025	DATE -	REVISED -	

STATE OF ILLINOIS
DEPARTMENT OF TRANSPORTATION

SHOULDER SCHEDULE

SCALE: | SHEET Shoulder Sched. | SHEETS | STA. | TO STA.

F.A.P. RTE.	SECTION	COUNTY	TOTAL SHEETS	SHEET NO.
674	(31,410,410-1)RS-4, (82-7K)RS-1	ST. CLAIR	33	18

CONTRACT NO. 76J62

ILLINOIS | FED. AID PROJECT

LOCATION			THERMOPLASTIC PAVEMENT MARKING								
			6"				8"	12"		24"	LETTERS & SYMBOLS
STA.	TO	STA.	SOLID WHITE LINE	SKIP-DASH 2/6 WHITE LANE LINE	SKIP-DASH 10/30 WHITE LANE LINE	SOLID YELLOW LINE	SOLID WHITE LINE	SOLID YELLOW LINE	SOLID WHITE LINE	SOLID WHITE STOP BAR	
MAINLINE			FOOT	23	FOOT	FOOT	FOOT	FOOT	FOOT	FOOT	SQ.FT
115+93	TO	128+73	1280		320	2560		7			
128+73	TO	136+27	754		189	754					
136+27	TO	140+20	393		98	393	786				
140+20	TO	149+78	958		240	958	280				
156+00	TO	158+50	250		93	250	500				
158+50	TO	166+78	828		207	828					
166+78	TO	170+78	400		100	400	800				
170+78	TO	178+08	730		183	730					
178+08	TO	192+10	1402		351	1402					
192+10	TO	194+50	240		60	240	480				
194+50	TO	197+63	616		78		50			36	
198+00	TO	235+42	3742		936	3742	50				
235+42	TO	237+70	228	76	57						
237+70	TO	245+77	1614		408	1614	1275		285	48	93.6
247+00	TO	270+05	2305		576	2305					
270+05	TO	274+95	870		124	807					
274+95	TO	277+10	290	45	54	123			204		
277+10	TO	297+41	2031		513	2031					
300+03	TO	343+00	4297		1085	4297					
115+93	TO	122+43	1966			565			46		128.1
122+43	TO	128+73	630		158	1262		165			
128+73	TO	135+53	680		170	680					
135+53	TO	140+31	478		141	478	310				
140+31	TO	148+57	826		207	826					
148+57	TO	150+55	255		50	198	380				
150+55	TO	152+34	179		90	179					
154+86	TO	157+50	264		96	264	320				
157+50	TO	167+10	960		240	960					
167+10	TO	174+08	698		175	698	812				
174+08	TO	197+63	2250		589	2355	55				
198+00	TO	202+08	716		102	816	55			36	
202+08	TO	206+82	474		119	474	600				
206+82	TO	237+70	3088		772	3088					
237+70	TO	245+77	675		352	800	217		94		
247+00	TO	251+10	610		103	820					
251+10	TO	254+35	325		81	325	410				
254+35	TO	273+80	1945		486	1945					
281+50	TO	297+71	1621		405	1621					
300+03	TO	333+25	3322		831	3322					
I-064 RAMPS											
140+20 WB I-64			1750			1750					
149+78 SB 158			1080			1080					
158+50 EB I-64			1180			1180					
166+78 SB 158			1970			1970					
140+31 NB IL 158			1940			1940					
148+57 WB I-64			1172			1172					
157+50 NB IL 158			1755			1755					
167+10 EB IL 158			1755			1755					
TURN LANES											
198+00	TO	203+93	593			593					
247+00	TO	252+85	585			585					
192+10	TO	197+63	553.00			553.00					
237+70	TO	245+77	807.00			807.00					
271+41	TO	275+14	373.00		93	373.00					
SIDE ROADS											
METRO PLAZA LN.			185	4			250		165	52	78
SUB-TOTALS			60888	125	10927	60623	7630	172	794	172	300
TOTALS			132563				7630	966		172	300

MODEL: Pav. Mrking [Sheet]
FILE NAME: c:\pw_work\pwidot\dintelman\jnd1061113\D876J62-Typicals.dgn

USER NAME = Jon.Dintelman	DESIGNED -	REVISED -
	DRAWN -	REVISED -
	CHECKED -	REVISED -
PLOT DATE = 2/14/2025	DATE -	REVISED -

STATE OF ILLINOIS
DEPARTMENT OF TRANSPORTATION

PAVEMENT MARKING

SCALE: | SHEET Pav. Mrking OF SHEETS | STA. | TO STA.

F.A.P. RTE.	SECTION	COUNTY	TOTAL SHEETS	SHEET NO.
674	(31,410,410-1)RS-4, (82-7K)RS-1	ST. CLAIR	33	19
		CONTRACT NO. 76J62		
		ILLINOIS FED. AID PROJECT		

RAISED REFLECTIVE PAVEMENT MARKER SCHEDULE								
LOCATION				LANE	ONE-WAY CRYSTAL	ONE-WAY AMBER	TWO-WAY AMBER	REMOVAL
STA	TO	STA			EACH	EACH	EACH	EACH
115+93	TO	116+30	37	NB/SB				
116+30	TO	116+75	45	NB/SB				
116+75	TO	117+25	50	NB/SB	61		15	76
117+25	TO	122+48	523	NB/SB				
122+48	TO	123+85	137	NB/SB	2		6	8
123+85	TO	128+85	500	NB/SB	12	26	26	64
128+85	TO	134+67	582	NB/SB	14	24		38
134+67	TO	137+21	254	NB	3			3
134+67	TO	137+21	254	SB	2			
137+21	TO	151+22	1401	NB/SB	35			
151+22	TO	152+34	112	NB/SB	4			4
152+34	TO	154+90	256	NB/SB	RESURFACING OMISSION			
154+90	TO	156+00	110	NB/SB	4			4
156+00	TO	188+80	3280	NB/SB	82			
188+80	TO	197+63	883	NB/SB	40	7		47
188+80	TO	197+63	883	SB TURN LANE	15	20	4	39
197+63	TO	198+20	57	WHERRY RD. INT	6			6
198+20	TO	206+76	856	NB/SB	40	7		47
198+20	TO	206+76	856	NB TURN LANE	16	19	4	39
206+76	TO	237+70	3094	NB/SB	77			
237+70	TO	245+80	810	NB/SB	52	9		61
237+70	TO	245+80	810	SB TURN LANE	21	21	4	46
245+80	TO	246+57	77	SEIBERT RD. INT	6			6
246+57	TO	254+35	778	NB/SB	34	10		44
246+57	TO	254+35	778	NB TURN LANE	16	17	4	37
254+35	TO	268+65	1430	NB/SB	36			
268+65	TO	271+35	270	NB/SB	6			6
271+35	TO	275+00	365	SB TURN LANE	15	20	4	39
275+00	TO	275+80	80	WHERRY RD. INT	6			6
275+80	TO	277+10	130	NB/SB	4			4
	TO			NB/SB	16			16
277+10	TO	297+41	2031	NB/SB	26			26
297+41	TO	300+03	262	NB/SB	RESURFACING OMISSION			
300+03	TO	343+00	4297	SB	55			
300+03	TO	333+25	3322	NB	43			43
SUBTOTAL					749	180	67	709
GRAND TOTAL					996			709

BUTT JOINT/TEMPORARY RAMP SCHEDULE					
STATION	LANE	LENGTH	WIDTH	CONC. SURFACE REMOVAL - BUTT JOINT	TEMPORARY RAMP
		FOOT	FOOT	SQ YD	SQ YD
115+93	NB/SB	5.0	165.0		91.7
134+67	SB	5.0	26.0		14.4
137+21	NB	5.0	38.0		21.1
151+22	SB	5.0	76.0		42.2
151+25	NB	5.0	76.0		42.2
152+34	NB/SB	5.0	76.0		42.2
154+86	NB/SB	5.0	76.0		42.2
156+00	NB/SB	5.0	76.0		42.2
188+80	NB/SB	5.0	52.0		28.9
206+82	NB/SB	5.0	52.0		28.9
237+70	NB/SB	5.0	52.0		28.9
254+35	NB/SB	5.0	52.0		28.9
288+20	NB	5.0	26.0		14.4
289+15	SB	5.0	26.0		14.4
297+31	NB/SB	5.0	26.0		14.4
300+03	SB	5.0	26.0		14.4
300+14	NB	5.0	26.0		14.4
306+75	NB	5.0	26.0		14.4
307+00	SB	5.0	26.0		14.4
333+25	NB	5.0	26.0		14.4
336+50	SB	5.0	26.0		14.4
343+00	SB	5.0	26.0		14.4
348+20	NB	5.0	26.0		14.4
METRO PLAZA LN		20.0	50.0	111.1	
SUBTOTAL				111.1	597.8
GRAND TOTAL				111	598

MODEL: Shedules Sheet
FILE NAME: c:\pw_work\pwidot\dintelman\d1061113\D876J62-Typicals.dgn

USER NAME = Jon.Dintelman	DESIGNED -	REVISED -	
	DRAWN -	REVISED -	
	CHECKED -	REVISED -	
PLOT DATE = 2/14/2025	DATE -	REVISED -	

STATE OF ILLINOIS
DEPARTMENT OF TRANSPORTATION

SCHEDULES

SCALE: | SHEET Shedules OF SHEETS | STA. | TO STA.

F.A.P. RTE.	SECTION	COUNTY	TOTAL SHEETS	SHEET NO.
674	(31,410,410-1)RS-4, (82-7K)RS-1	ST. CLAIR	33	19A
		CONTRACT NO. 76J62		
	ILLINOIS	FED. AID PROJECT		

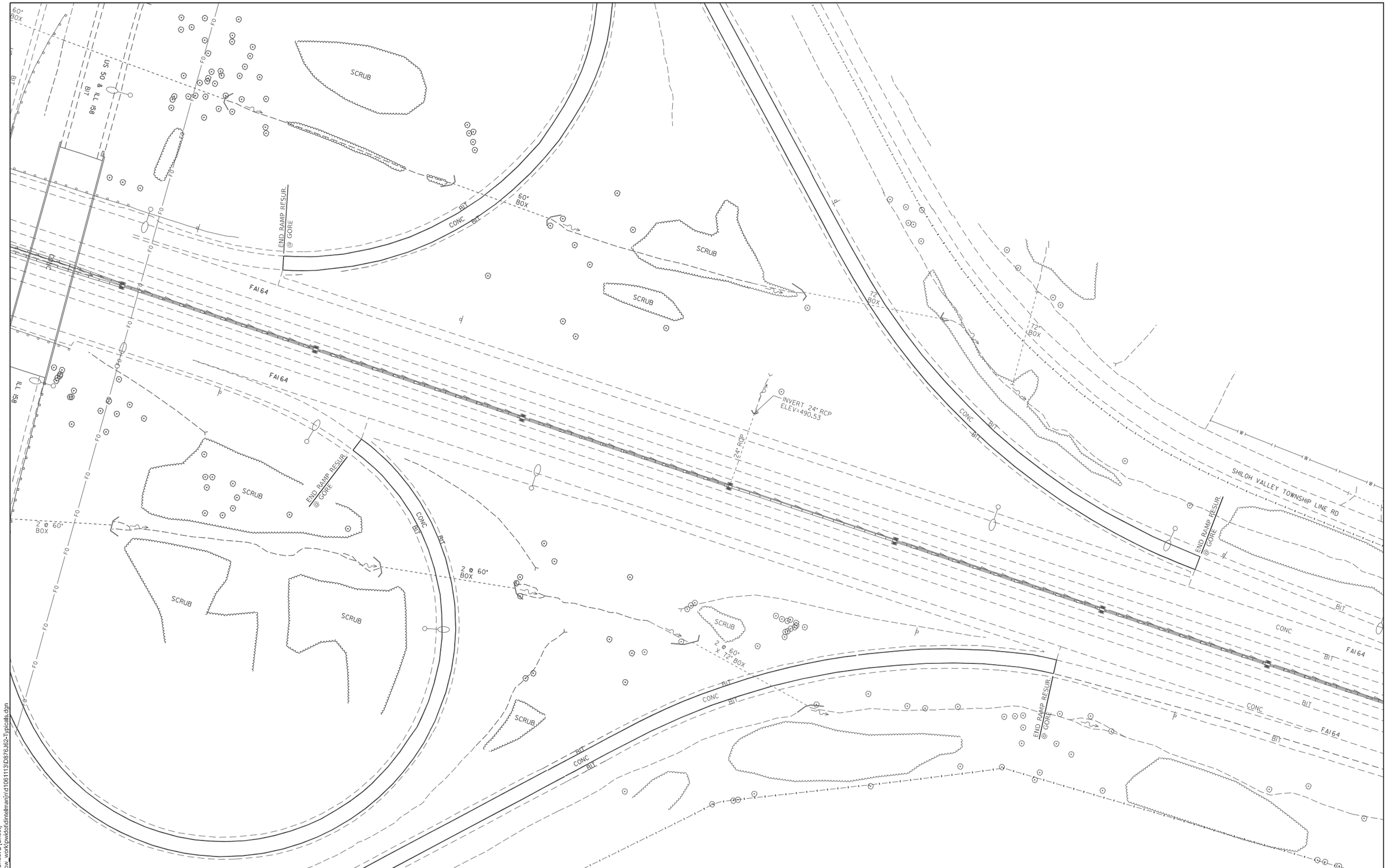

MODEL: Ramp Sheet 2 [Sheet]
FILE NAME: c:\pw_work\pwidot\dintelman\jnd10611113\D876J62-TypicalS.dgn

USER NAME = Jon.Dintelman	DESIGNED -	REVISED -	
	DRAWN -	REVISED -	
	CHECKED -	REVISED -	
PLOT DATE = 1/31/2025	DATE -	REVISED -	

STATE OF ILLINOIS
DEPARTMENT OF TRANSPORTATION

RAMP RESURFACING DETAIL

SCALE: | SHEET Ramp Sheet 2 OF 2 | SHEETS | STA. | TO STA.

F.A.P. RTE.	SECTION	COUNTY	TOTAL SHEETS	SHEET NO.
674	(31,410,410-1)RS-4, (82-7K)RS-1	ST. CLAIR	33	20

CONTRACT NO. 76J62

ILLINOIS | FED. AID PROJECT

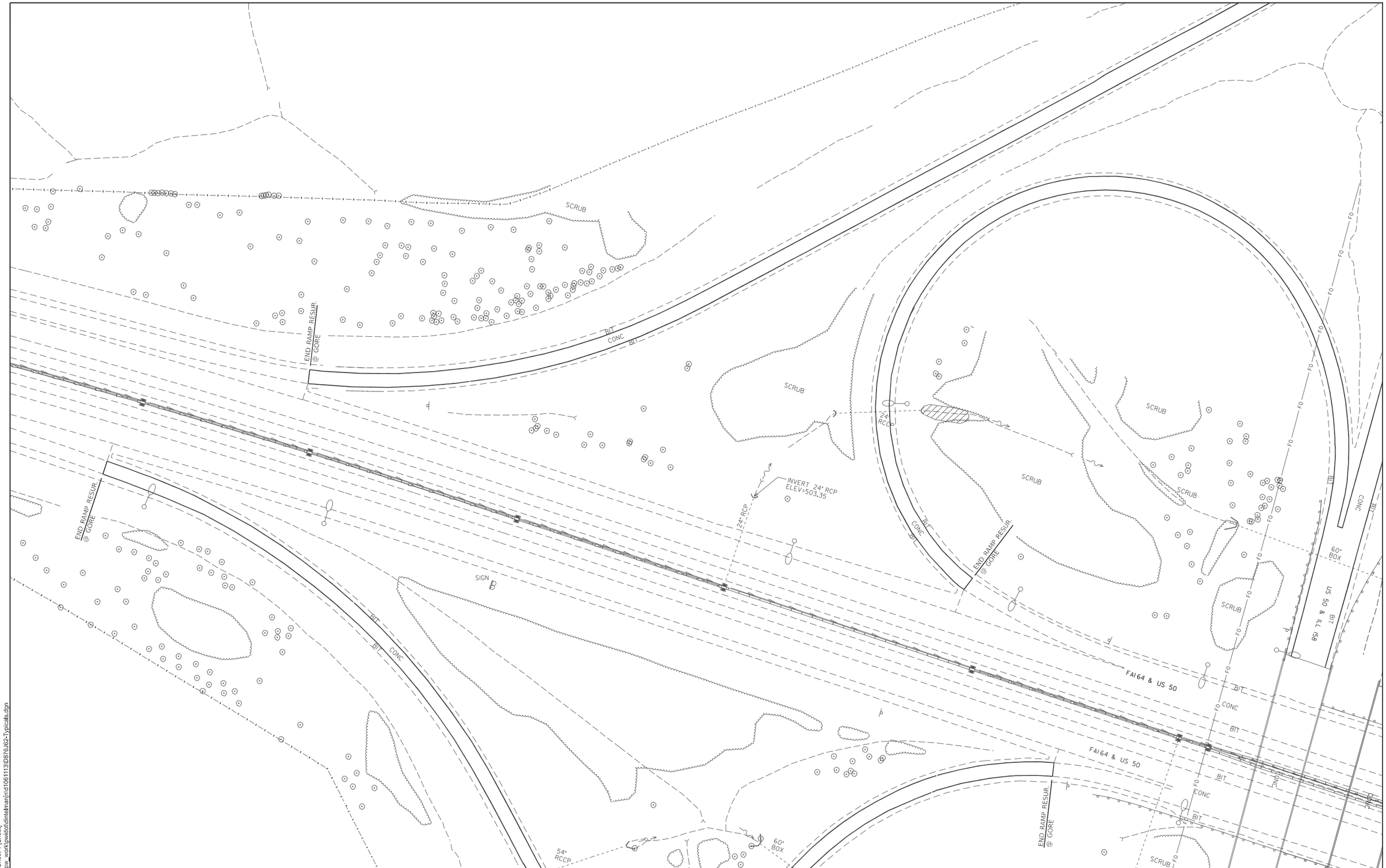

MODEL: Ramp Sheet 1 [Sheet]
FILE NAME: c:\pw_work\pwidot\dintelman\d1061113\D76J62-Typicals.dgn

USER NAME = Jon.Dintelman	DESIGNED -	REVISED -	
	DRAWN -	REVISED -	
	CHECKED -	REVISED -	
PLOT DATE = 1/31/2025	DATE -	REVISED -	

STATE OF ILLINOIS
DEPARTMENT OF TRANSPORTATION

RAMP RESURFACING
DETAIL

SCALE: | SHEET Ramp Sheet 1 OF SHEETS | STA. | TO STA.

F.A.P. RTE.	SECTION	COUNTY	TOTAL SHEETS	SHEET NO.
674	(31,410,410-1)RS-4, (82-7K)RS-1	ST. CLAIR	33	21

CONTRACT NO. 76J62

ILLINOIS | FED. AID PROJECT

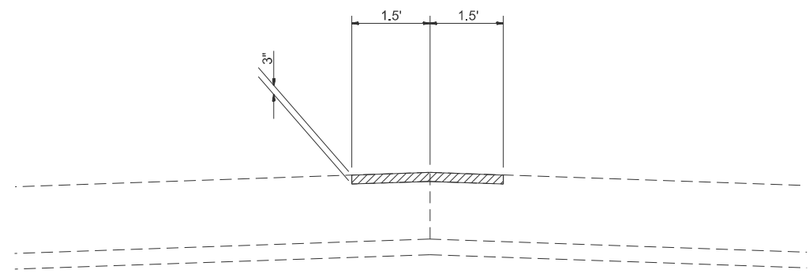

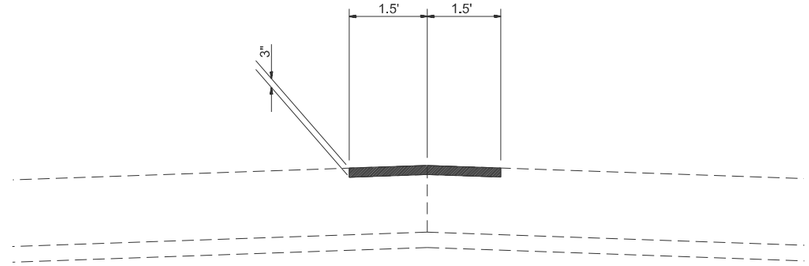

LONGITUDINAL PARTIAL DEPTH REMOVAL

LONGITUDINAL PARTIAL DEPTH PATCHING

NOTES:

1) RESURFACING SHALL BE LOCATED AT THE CENTERLINE OF PAVEMENT JOINT. ACTUAL LOCATIONS SHALL BE FIELD DETERMINED BY THE ENGINEER.

2) AFTER MILLING, AND PRIOR TO PLACING THE HMA MIXTURE, AREAS WITH SIGNIFICANT ADDITIONAL DETERIORATION SHALL BE PRE-FILLED WITH MIXTURES FOR CRACK, JOINTS AND FLANGEWAYS AND COMPACTED TO THE SATISFACTION OF THE ENGINEER.

MODEL: PD-Patch Detail [Sheet]
FILE NAME: c:\pw_work\pw\dot\dintelman\jnd1061113\D876J62-Typicals.dgn

USER NAME = Jon.Dintelman	DESIGNED -	REVISED -	STATE OF ILLINOIS DEPARTMENT OF TRANSPORTATION
	DRAWN -	REVISED -	
	CHECKED -	REVISED -	
PLOT DATE = 1/31/2025	DATE -	REVISED -	

PARTIAL DEPTH PATCH DETAIL

SCALE: SHEET PD-Patch Detail SHEETS STA. TO STA.

F.A.P. RTE.	SECTION	COUNTY	TOTAL SHEETS	SHEET NO.
674	(31,410,410-1)RS-4, (82-7K)RS-1	ST. CLAIR	33	22
		CONTRACT NO. 76J62		
		ILLINOIS FED. AID PROJECT		

FAP route	SECTION	COUNTY	TOTAL SHEETS	SHEET no.
674	31-1TS-1	ST. CLAIR	71	43
STA.		TO STA.		

EXISTING CONDITIONS:

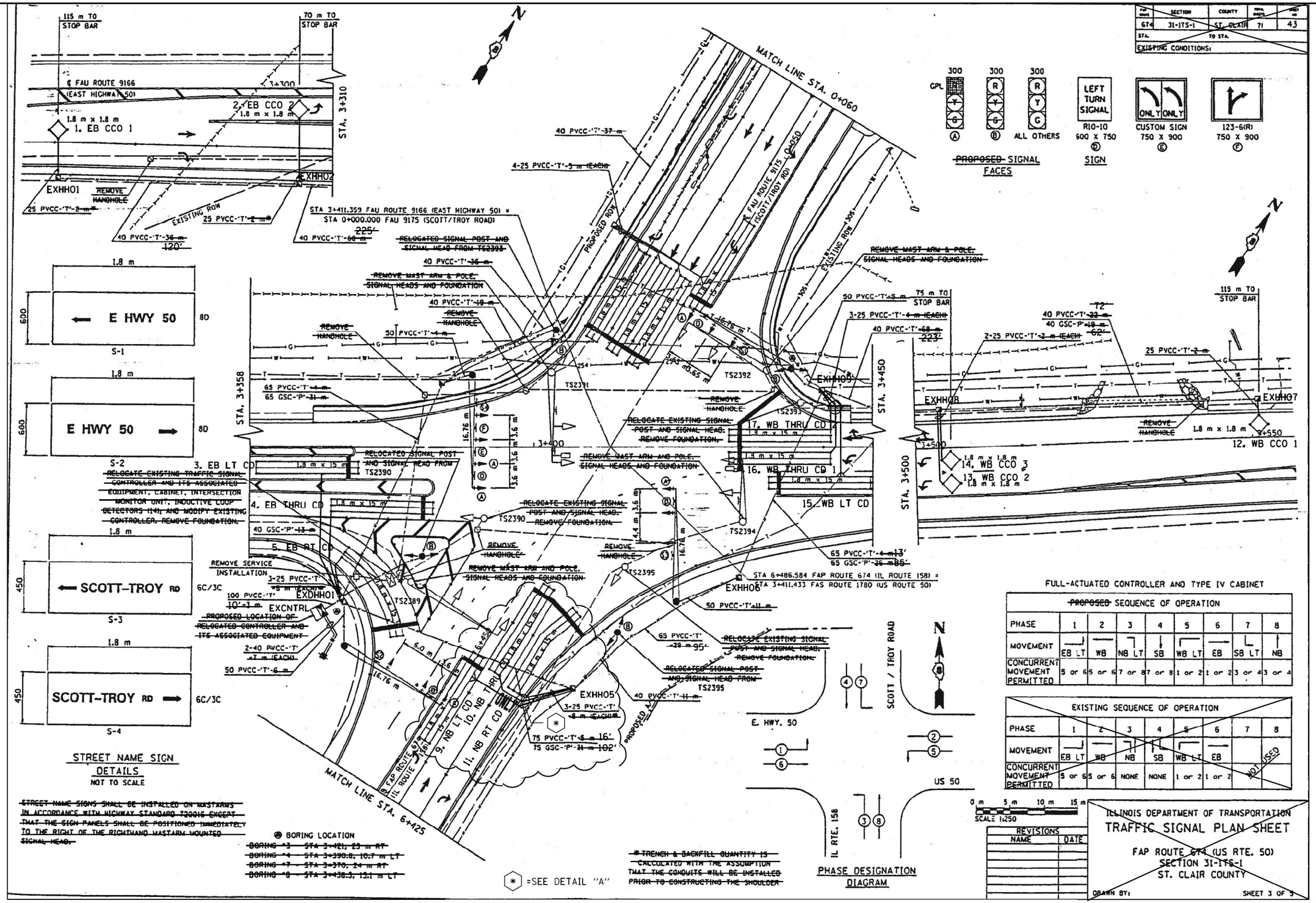

FULL-ACTUATED CONTROLLER AND TYPE IV CABINET

PROPOSED SEQUENCE OF OPERATION

PHASE	1	2	3	4	5	6	7	8
MOVEMENT	EB LT	WB	NB LT	SB	WB LT	EB	SB LT	NB
CONCURRENT MOVEMENT PERMITTED	5 or 6	5 or 6	7 or 8	7 or 8	1 or 2	1 or 2	3 or 4	3 or 4

EXISTING SEQUENCE OF OPERATION

PHASE	1	2	3	4	5	6	7	8
MOVEMENT	EB LT	WB	NB	SB	WB LT	EB		NOT USED
CONCURRENT MOVEMENT PERMITTED	5 or 6	5 or 6	NONE	NONE	1 or 2	1 or 2		

REVISIONS	
NAME	DATE

ILLINOIS DEPARTMENT OF TRANSPORTATION
TRAFFIC SIGNAL PLAN SHEET
FAP ROUTE 674 (US RTE. 50)
SECTION 31-1TS-1
ST. CLAIR COUNTY

DRAWN BY:
SHEET 3 OF 3

MODEL: Untitled [Sheet]
FILE NAME: c:\pw_work\pwidot\dintelman\jnd10611\D876J62-Typicals.dgn

USER NAME = Jon.Dintelman	DESIGNED -	REVISED -	
	DRAWN -	REVISED -	
	CHECKED -	REVISED -	
PLOT DATE = 1/30/2025	DATE -	REVISED -	

STATE OF ILLINOIS
DEPARTMENT OF TRANSPORTATION

IL 158 & US 50 DETCTOR LOOP REPLACEMENT PLAN

SCALE: SHEET 1 OF SHEETS STA. TO STA.

F.A.P. RTE.	SECTION	COUNTY	TOTAL SHEETS	SHEET NO.
674	(31,410,410-1)RS-4, (82-7K)RS-1	ST. CLAIR	33	23
		CONTRACT NO. 76J62		
		ILLINOIS	FED. AID PROJECT	

F.A.P. ROUTE	SECTION	COUNTY	TOTAL SHEETS	SHEET NO.
674	31-1TS-1	ST. CLAIR	71	44
STA.	TO STA.			
EXISTING CONDITIONS:				

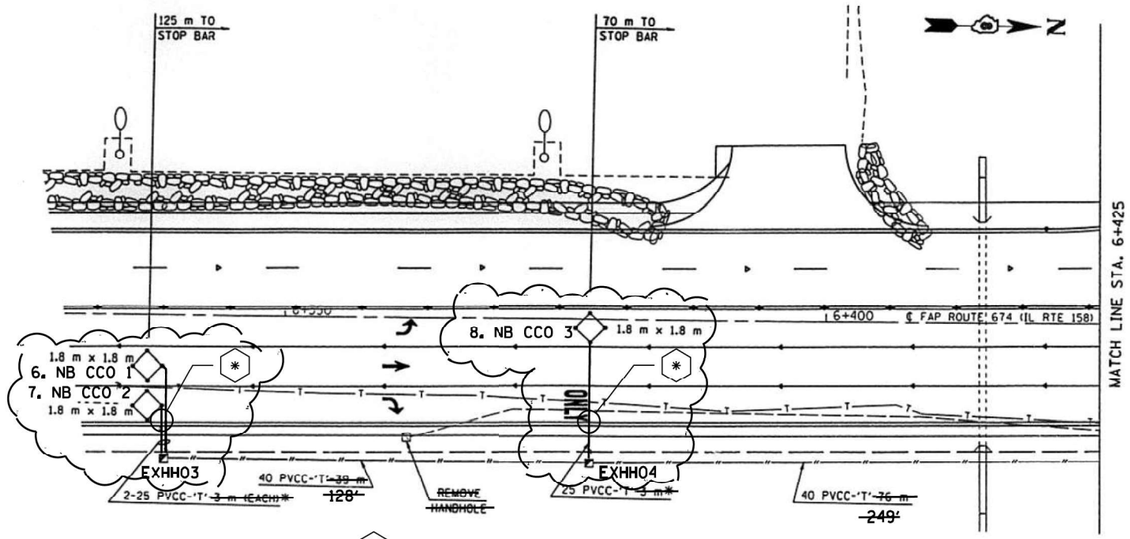

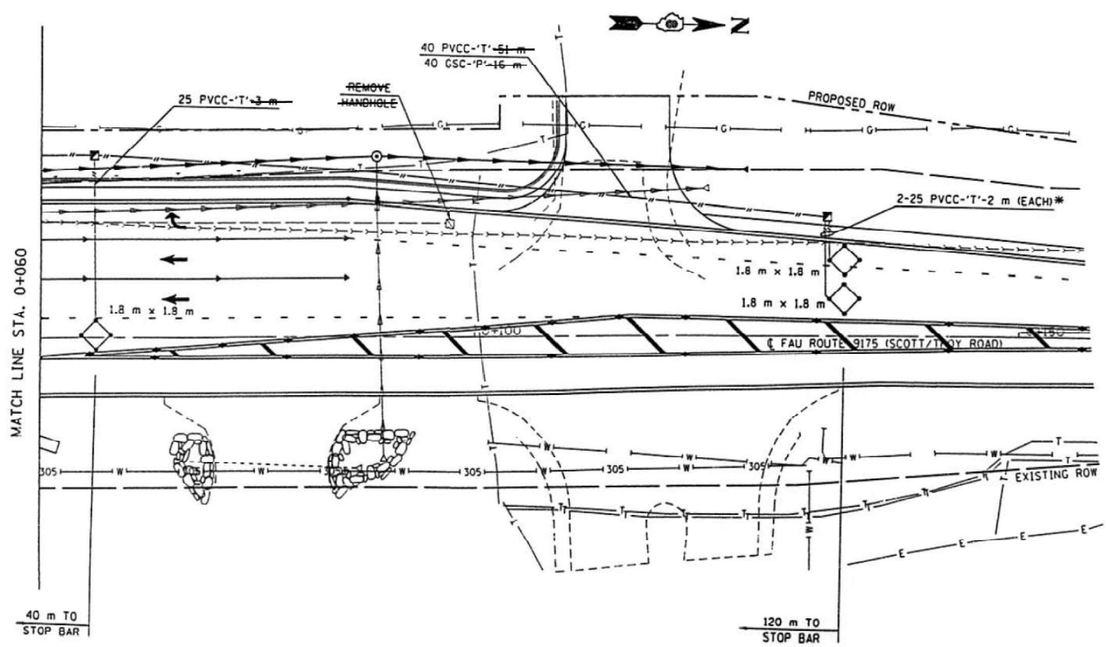

~~* TRENCH & BACKFILL QUANTITY IS CALCULATED WITH THE ASSUMPTION THAT THE CONDUITS WILL BE INSTALLED PRIOR TO CONSTRUCTING THE SHOULDER~~

0 m 5 m 10 m 15 m
SCALE 1:250

REVISIONS	
NAME	DATE

ILLINOIS DEPARTMENT OF TRANSPORTATION
TRAFFIC SIGNAL PLAN SHEET
FAP ROUTE 674 (US RTE. 50)
SECTION 31-1TS-1
ST. CLAIR COUNTY
DRAWN BY:
SHEET 4 OF 5

MODEL: Electrical 2 [Sheet]
FILE NAME: c:\pw_work\pwidot\dintelman\dd1061113\D876J62-Typicals.dgn

USER NAME = Jon.Dintelman	DESIGNED -	REVISED -	STATE OF ILLINOIS DEPARTMENT OF TRANSPORTATION
	DRAWN -	REVISED -	
	CHECKED -	REVISED -	
PLOT DATE = 1/30/2025	DATE -	REVISED -	

IL 158 & US 50 DETCTOR LOOP REPLACEMENT PLAN

SCALE: | SHEET Electrical ØF | SHEETS | STA. | TO STA.

F.A.P. RTE.	SECTION	COUNTY	TOTAL SHEETS	SHEET NO.
674	(31,410,410-1)RS-4, (82-7K)RS-1	ST. CLAIR	33	24
		CONTRACT NO. 76J62		
	ILLINOIS	FED. AID PROJECT		

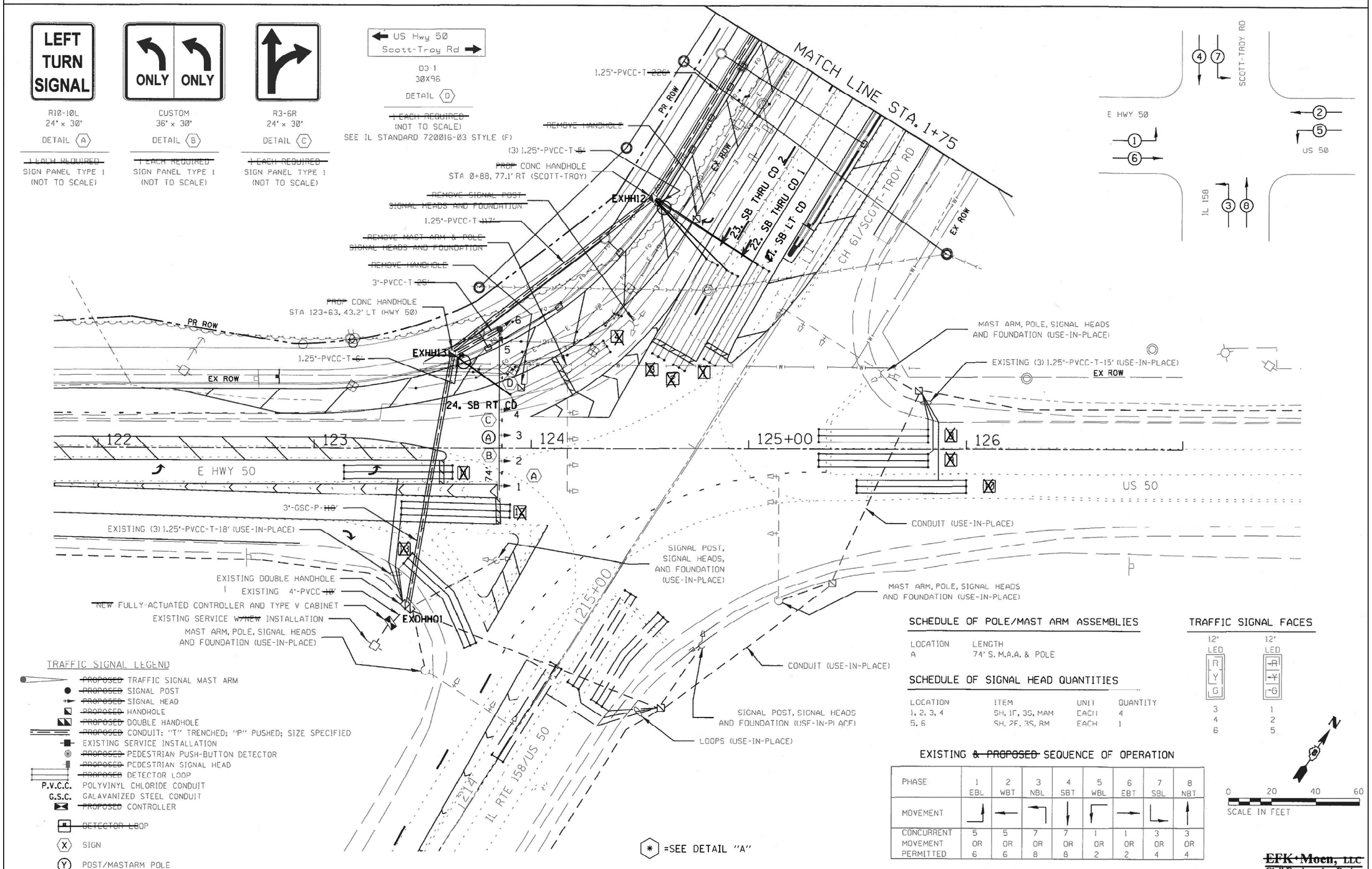

FILE NAME = 48-Signal Sheet 2.dgn	USER NAME = mkirchner	DESIGNED - MMH	REVISED -	STATE OF ILLINOIS DEPARTMENT OF TRANSPORTATION	TRAFFIC SIGNAL PLAN	F.A.P. RTE. 9175	SECTION 15-00253-15-PW	COUNTY ST. CLAIR	TOTAL SHEETS 48	SHEET NO. 56
		DRAWN - MSK	REVISED -					CONTRACT NO.		
	PLOT SCALE = 42.0000 ' / in.	CHECKED - SLD	REVISED -					ILLINOIS FED. AID PROJECT		
Default	PLOT DATE = 10/11/2017	DATE -	REVISED -		SCALE: 1" = 20' SHEET OF SHEETS STA. TO STA.					

USER NAME = Jon.Dintelman	DESIGNED -	REVISED -	STATE OF ILLINOIS DEPARTMENT OF TRANSPORTATION	IL 158 & US 50 DETCTOR LOOP REPLACEMENT PLAN	F.A.P. RTE. 674	SECTION (31,410,410-1)RS-4, (82-7K)RS-1	COUNTY ST. CLAIR	TOTAL SHEETS 33	SHEET NO. 25
	DRAWN -	REVISED -					CONTRACT NO. 76J62		
	CHECKED -	REVISED -							
PLOT DATE = 1/30/2025	DATE -	REVISED -		SCALE: SHEET Electrical OF SHEETS STA. TO STA.			ILLINOIS FED. AID PROJECT		

MODEL: Electrical 3 [Sheet]
FILE NAME: c:\pw_work\pwidot\dintelman\d1061113\D876J62-Typicals.dgn

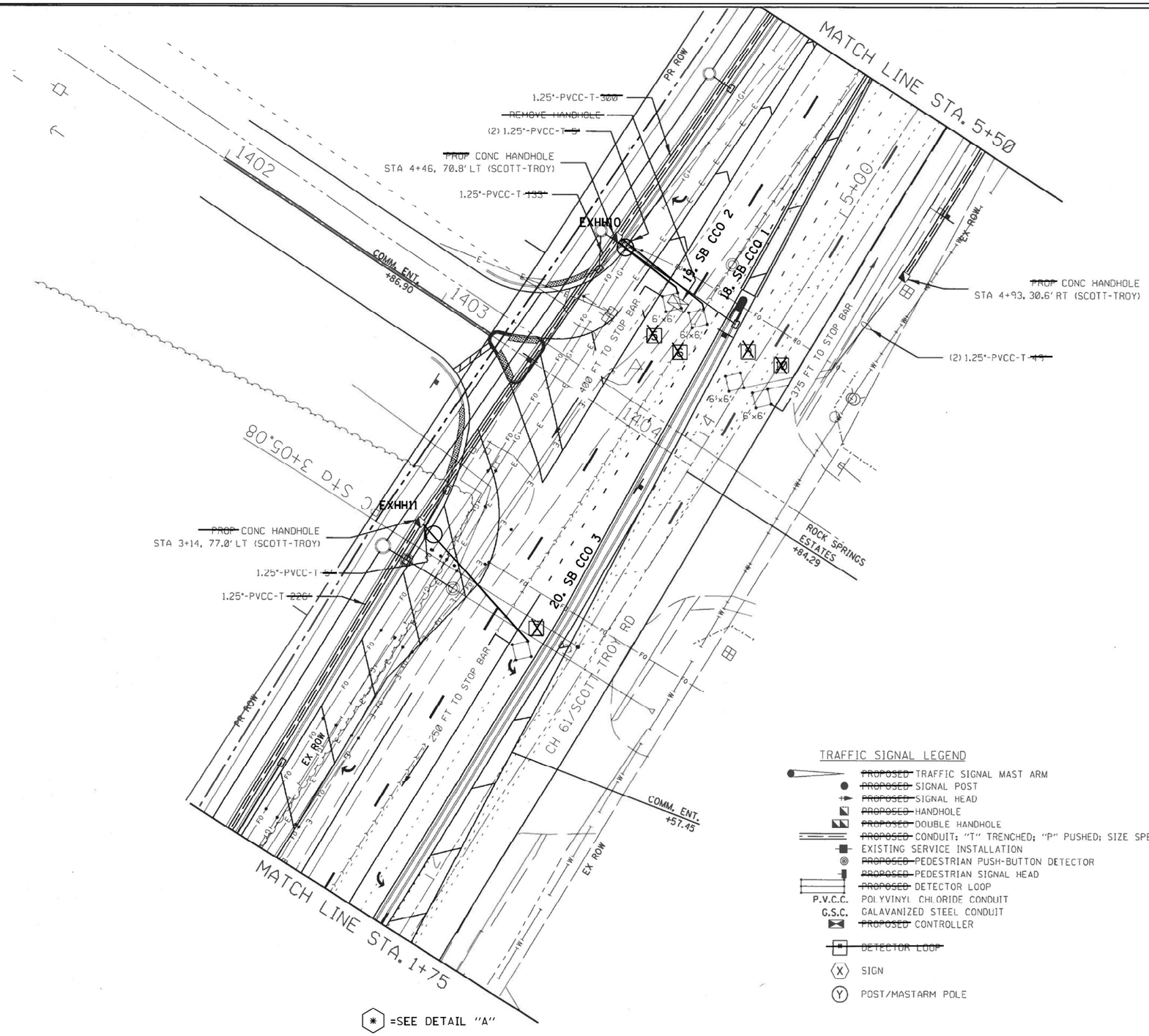

EFK·Moen, LLC
Civil Engineering Design

ILE NAME = 8-Signal Sheet 3.dgn	USER NAME = mkirchner	DESIGNED - MMH	REVISED -	STATE OF ILLINOIS DEPARTMENT OF TRANSPORTATION	TRAFFIC SIGNAL PLAN	F.A.U. RTE.	SECTION	COUNTY	TOTAL SHEETS / SHEET NO.
		DRAWN - MSK	REVISED -			9175	15-00253-15-PW	ST. CLAIR	50 / 56
	PLOT SCALE = 40.0000 ' / in.	CHECKED - SLD	REVISED -					CONTRACT NO.	
efault	PLOT DATE = 10/11/2017	DATE -	REVISED -		SCALE: 1" = 20' SHEET OF SHEETS STA. TO STA.			ILLINOIS FED. AID PROJECT	

USER NAME = Jon.Dintelman	DESIGNED -	REVISED -	STATE OF ILLINOIS DEPARTMENT OF TRANSPORTATION	IL 158 & US 50 DETCTOR LOOP REPLACEMENT PLAN	F.A.P. RTE.	SECTION	COUNTY	TOTAL SHEETS	SHEET NO.
	DRAWN -	REVISED -			674	(31,410,410-1)RS-4, (82-7K)RS-1	ST. CLAIR	33	26
	CHECKED -	REVISED -					CONTRACT NO. 76J62		
PLOT DATE = 1/30/2025	DATE -	REVISED -		SCALE: SHEET Electrical OF SHEETS STA. TO STA.			ILLINOIS FED. AID PROJECT		

MODEL: Electrical 4 [Sheet]
FILE NAME: c:\pw_work\pwidot\dintelman\d1061113\D876J62-Typicals.dgn

CABLE DIAGRAM LEGEND

- ELECTRIC CABLE IN CONDUIT
- EXISTING ELECTRIC CABLE IN CONDUIT
- S — CABLE SPLICE (SEE GENERAL NOTES)
- #/C — INDICATES NUMBER OF CONDUCTORS IN CABLE
- CD — CALL DELAY (SEE GENERAL NOTES)
- CCO — CALL CARRY OVER (SEE GENERAL NOTES)
- EXISTING SERVICE INSTALLATION
- EXISTING ILUMINATED SIGN
- #6 — INDICATES AMERICAN WIRE GAUGE (AWG) SIZE 6 CONDUCTORS (SEE GENERAL NOTES)

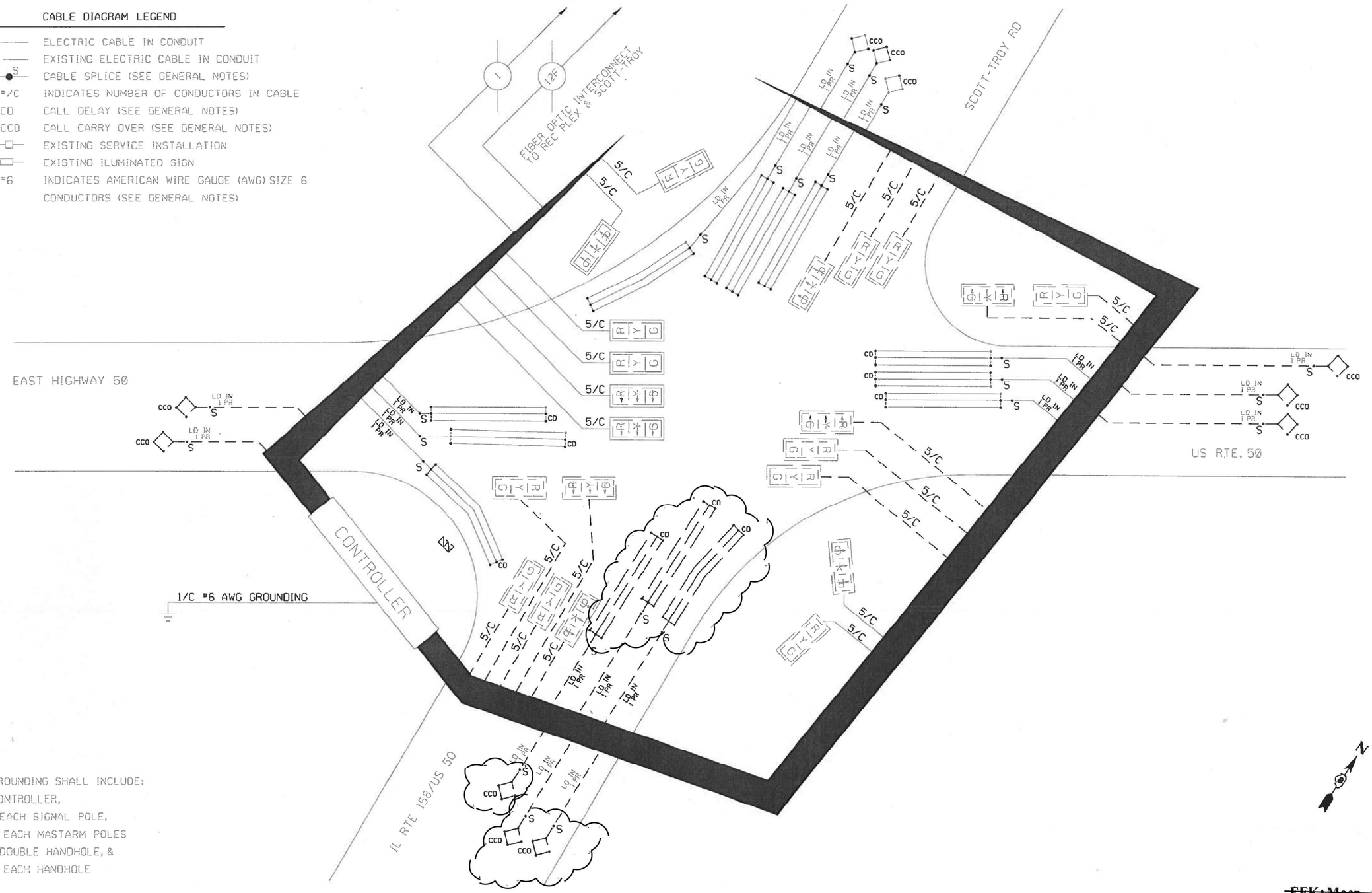

GROUNDING SHALL INCLUDE:
CONTROLLER,
1 EACH SIGNAL POLE,
3 EACH MASTARM POLES
1 DOUBLE HANDHOLE, &
3 EACH HANDHOLE

~~EFK+Moen, LLC~~
~~Civil Engineering Design~~

FILE NAME = 49-Signal Green 2-cable.dgn	USER NAME = Jon.Dintelman	DESIGNED - MMH	REVISED -
		DRAWN - MSK	REVISED -
	PLOT SCALE = 42.2222 ' / in.	CHECKED - SLD	REVISED -
Default	PLOT DATE = 12/11/2017	DATE -	REVISED -

STATE OF ILLINOIS
DEPARTMENT OF TRANSPORTATION

TRAFFIC SIGNAL DETAILS
SCOTT-TROY RD & US HWY 50
WIRING DIAGRAM

SCALE: 1" = 20' | SHEET OF SHEETS | STA. TO STA.

F.A.P. RTE.	SECTION	COUNTY	TOTAL SHEETS	SHEET NO.
9175	15-00253-15-PVM	ST. CLAIR	49	56
		CONTRACT NO.		
		ILLINOIS FED. AID PROJECT		

USER NAME = Jon.Dintelman	DESIGNED -	REVISED -
	DRAWN -	REVISED -
	CHECKED -	REVISED -
PLOT DATE = 1/30/2025	DATE -	REVISED -

STATE OF ILLINOIS
DEPARTMENT OF TRANSPORTATION

IL 158 & US 50 DETCTOR LOOP
CABLE DIAGRAM

SCALE: | SHEET Electrical 6 OF SHEETS | STA. TO STA.

F.A.P. RTE.	SECTION	COUNTY	TOTAL SHEETS	SHEET NO.
674	(31,410,410-1)RS-4, (82-7K)RS-1	ST. CLAIR	33	27
		CONTRACT NO. 76J62		
		ILLINOIS FED. AID PROJECT		

MODEL: Electrical 5 [Sheet]
FILE NAME: c:\pw_work\pwidot\dintelman\jnd10611\D876J62-Typicals.dgn

F.A.P. RTE.	SECTION	COUNTY	TOTAL SHEETS	SHEET NO.
674	410-(1,2,3) TS-1	ST. CLAIR	11	10
F.A.U.R.A. REG 5		ILLINOIS	FED. AID PROJECT	

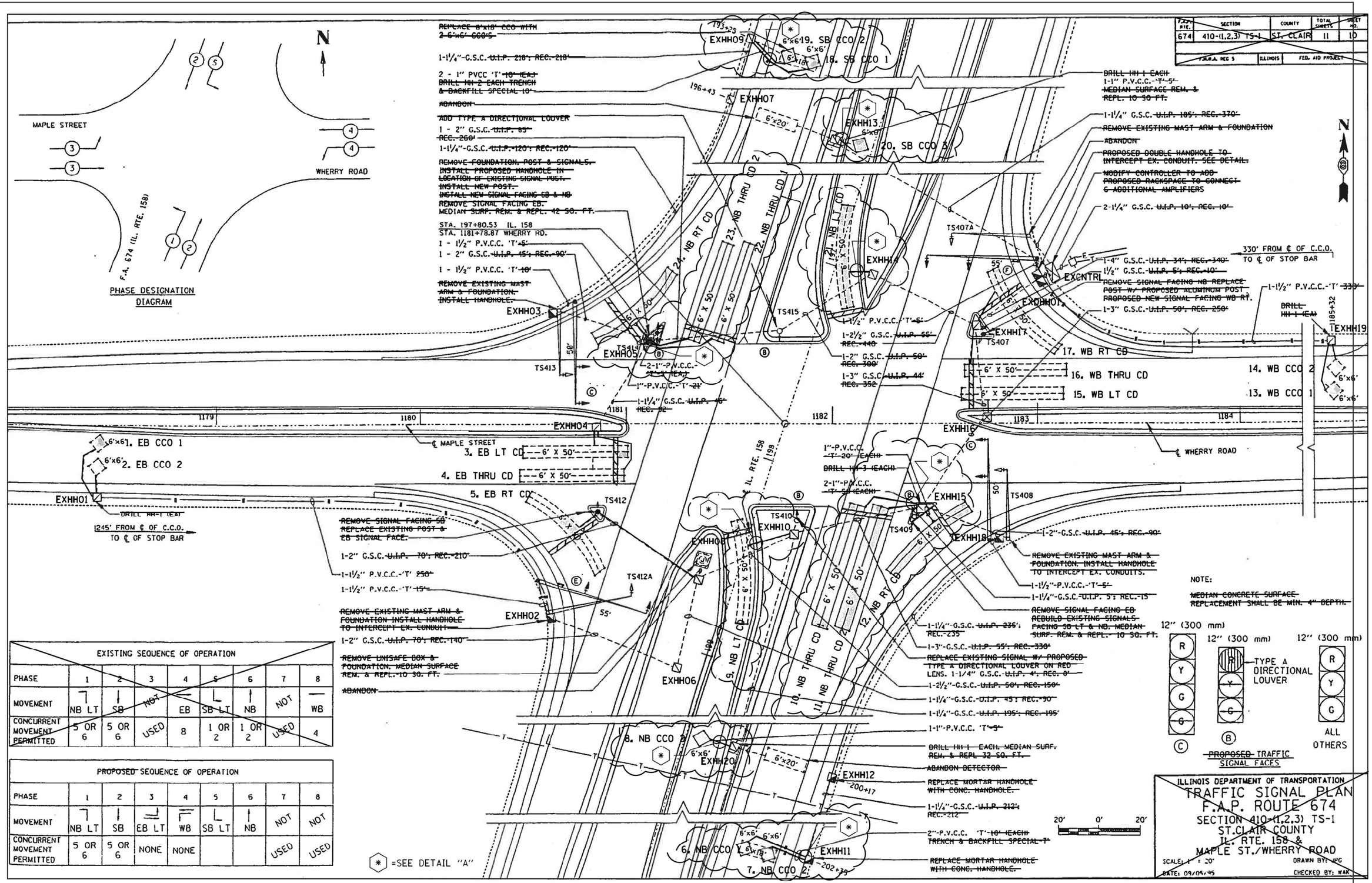

EXISTING SEQUENCE OF OPERATION								
PHASE	1	2	3	4	5	6	7	8
MOVEMENT	NB LT	SB	NOT	EB	SB LT	NB	NOT	WB
CONCURRENT MOVEMENT PERMITTED	5 OR 6	5 OR 6	USED	8	1 OR 2	1 OR 2	USED	4

PROPOSED SEQUENCE OF OPERATION								
PHASE	1	2	3	4	5	6	7	8
MOVEMENT	NB LT	SB	EB LT	WB	SB LT	NB	NOT	NOT
CONCURRENT MOVEMENT PERMITTED	5 OR 6	5 OR 6	NONE	NONE			USED	USED

ILLINOIS DEPARTMENT OF TRANSPORTATION
TRAFFIC SIGNAL PLAN
F.A.P. ROUTE 674
SECTION 410-(1,2,3) TS-1
ST.CLAIR COUNTY
IL. RTE. 158 &
MAPLE ST./WHERRY ROAD
SCALE: 1" = 20' DRAWN BY: JPG
DATE: 09/05/95 CHECKED BY: WAK

MODEL: Electrical 6 [Sheet]
FILE NAME: c:\pw_work\pwidot\dintelman\d1061113\D876J62-typicals.dgn

USER NAME = Jon.Dintelman	DESIGNED -	REVISED -	STATE OF ILLINOIS DEPARTMENT OF TRANSPORTATION
	DRAWN -	REVISED -	
	CHECKED -	REVISED -	
PLOT DATE = 1/30/2025	DATE -	REVISED -	

IL 158 & WHERRY ROAD DETECTOR LOOP REPLACEMENT PLAN

SCALE: SHEET Electrical 6 OF SHEETS STA. TO STA.

F.A.P. RTE.	SECTION	COUNTY	TOTAL SHEETS	SHEET NO.
674	(31,410,410-1)RS-4, (82-7K)RS-1	ST. CLAIR	33	28
		CONTRACT NO. 76J62		
		ILLINOIS	FED. AID PROJECT	

F.A.P. RTE.	SECTION	COUNTY	TOTAL SHEETS	SHEET NO.
674	410-(1,2,3) TS-1	ST. CLAIR	11	11
F.H.W.A. REG 5	ILLINOIS	FED. AID PROJECT		

SEP 12 1985

CABLE DIAGRAM LEGEND

- ELECTRIC CABLE IN CONDUIT
- S — CABLE SPLICE (SEE GENERAL NOTES)
- 2/C — INDICATES NUMBER OF CONDUCTORS IN CABLE
- TW SH — TWISTED AND SHIELDED CABLE
- CD — CALL DELAY (SEE GENERAL NOTES)
- CCO — CALL CARRY OVER (SEE GENERAL NOTES)
- SERVICE INSTALLATION
- #6 — INDICATES AMERICAN WIRE GAUGE (AWG) SIZE 6 CONDUCTORS (SEE GENERAL NOTES)
- R Y G — TRAFFIC SIGNAL HEAD, 3 SECTIONS
- R Y G Φ Ⓑ — TRAFFIC SIGNAL HEAD, 3 SECTIONS, TYPE A LOUVER
- R Y G Φ Ⓒ — TRAFFIC SIGNAL HEAD, 4 SECTIONS

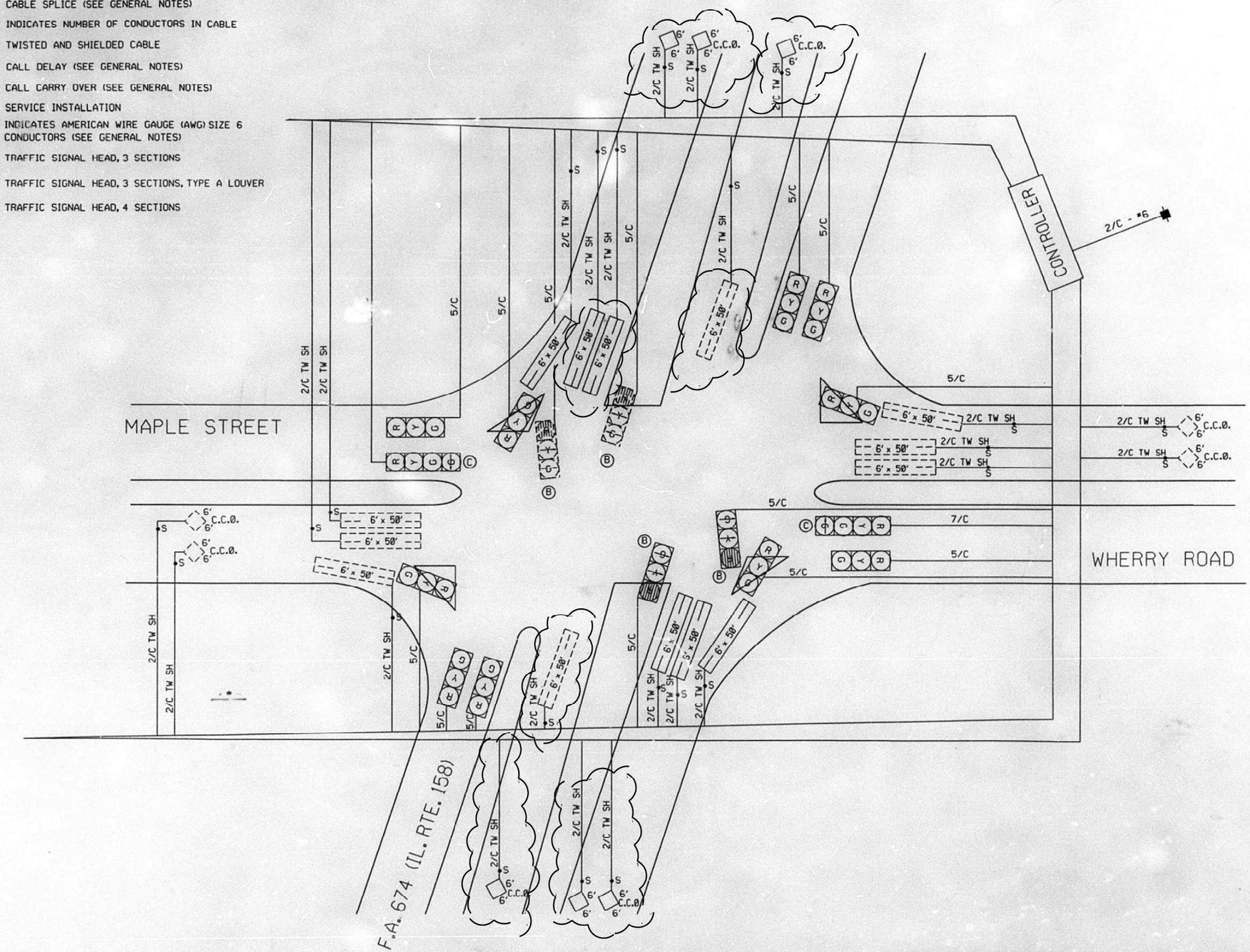

ILLINOIS DEPARTMENT OF TRANSPORTATION
CABLE DIAGRAM
F.A.P. ROUTE 674
SECTION 410-(1,2,3) TS-1
ST. CLAIR COUNTY
IL. RTE. 158 &
MAPLE ST./WHERRY ROAD
SCALE: NONE
DRAWN BY: JVR

MODEL: Electrical 7 [Sheet]
FILE NAME: c:\pw_work\pwidot\dintelman\d1061113\D876J62-Typicals.dgn

USER NAME = Jon.Dintelman	DESIGNED -	REVISED -	
	DRAWN -	REVISED -	
	CHECKED -	REVISED -	
PLOT DATE = 1/30/2025	DATE -	REVISED -	

STATE OF ILLINOIS
DEPARTMENT OF TRANSPORTATION

IL 158 AND WHERRY ROAD
CABLE DIAGRAM

SCALE: | SHEET Electrical ØF | SHEETS | STA. | TO STA.

F.A.P. RTE.	SECTION	COUNTY	TOTAL SHEETS	SHEET NO.
674	(31,410,410-1)RS-4, (82-7K)RS-1	ST. CLAIR	33	29
		CONTRACT NO. 76J62		
		ILLINOIS	FED. AID PROJECT	

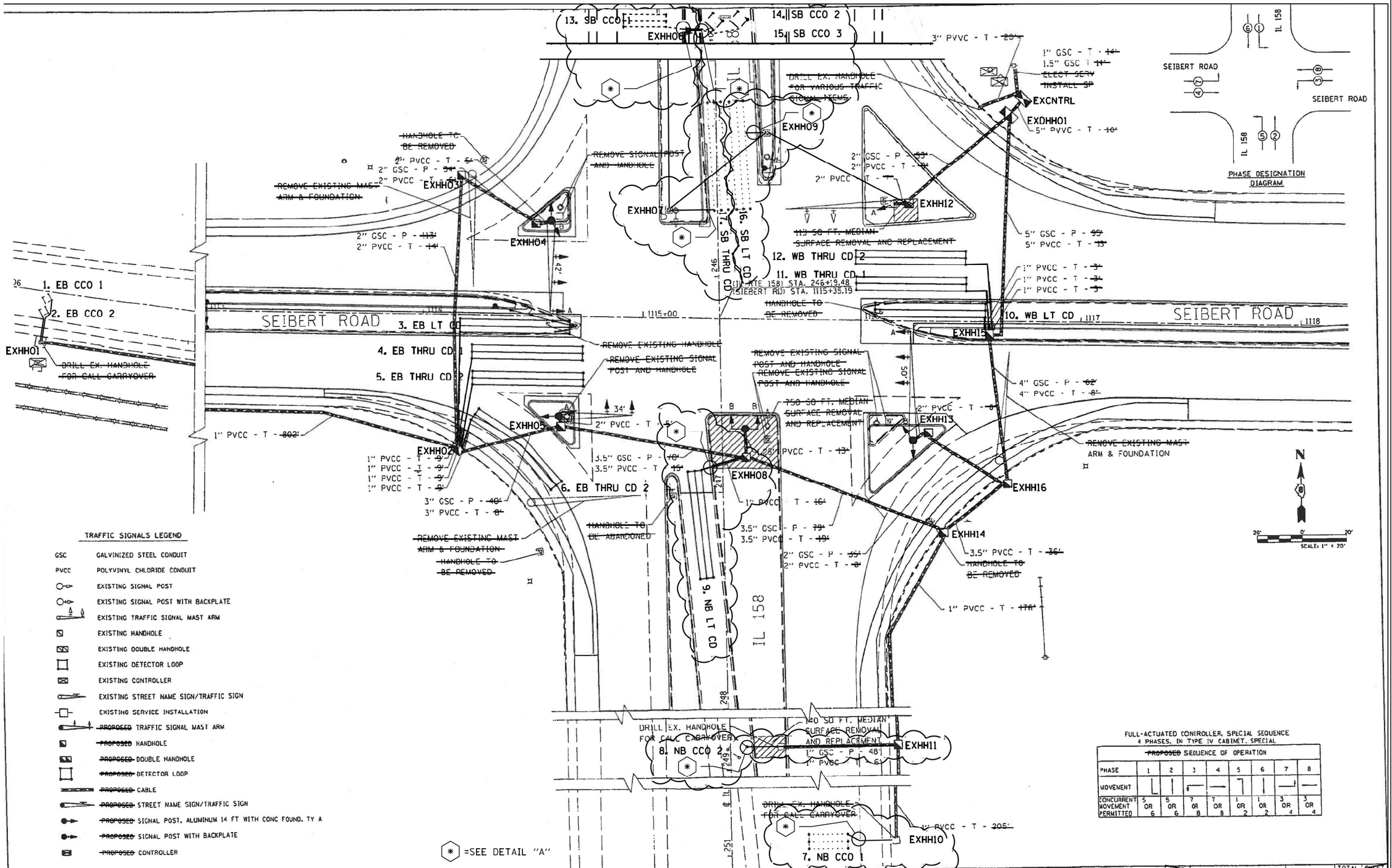

USER NAME = Jon.Dintelman	DESIGNED -	REVISED -	STATE OF ILLINOIS DEPARTMENT OF TRANSPORTATION
	DRAWN -	REVISED -	
	CHECKED -	REVISED -	
PLOT DATE = 1/30/2025	DATE -	REVISED -	

IL 158 & SEIBERT RD
TRAFFIC SIGNAL PLANS

SCALE: | SHEET Electrical 8 OF | SHEETS | STA. | TO STA.

F.A.P. RTE.	SECTION	COUNTY	TOTAL SHEETS	SHEET NO.
674	(31,410,410-1)RS-4, (82-7K)RS-1	ST. CLAIR	33	30
		CONTRACT NO. 76J62		
		ILLINOIS FED. AID PROJECT		

MODEL: Electrical 8 [Sheet]
FILE NAME: c:\pw_work\pwidot\dintelman\jnd10611113\D876J62-Typicals.dgn

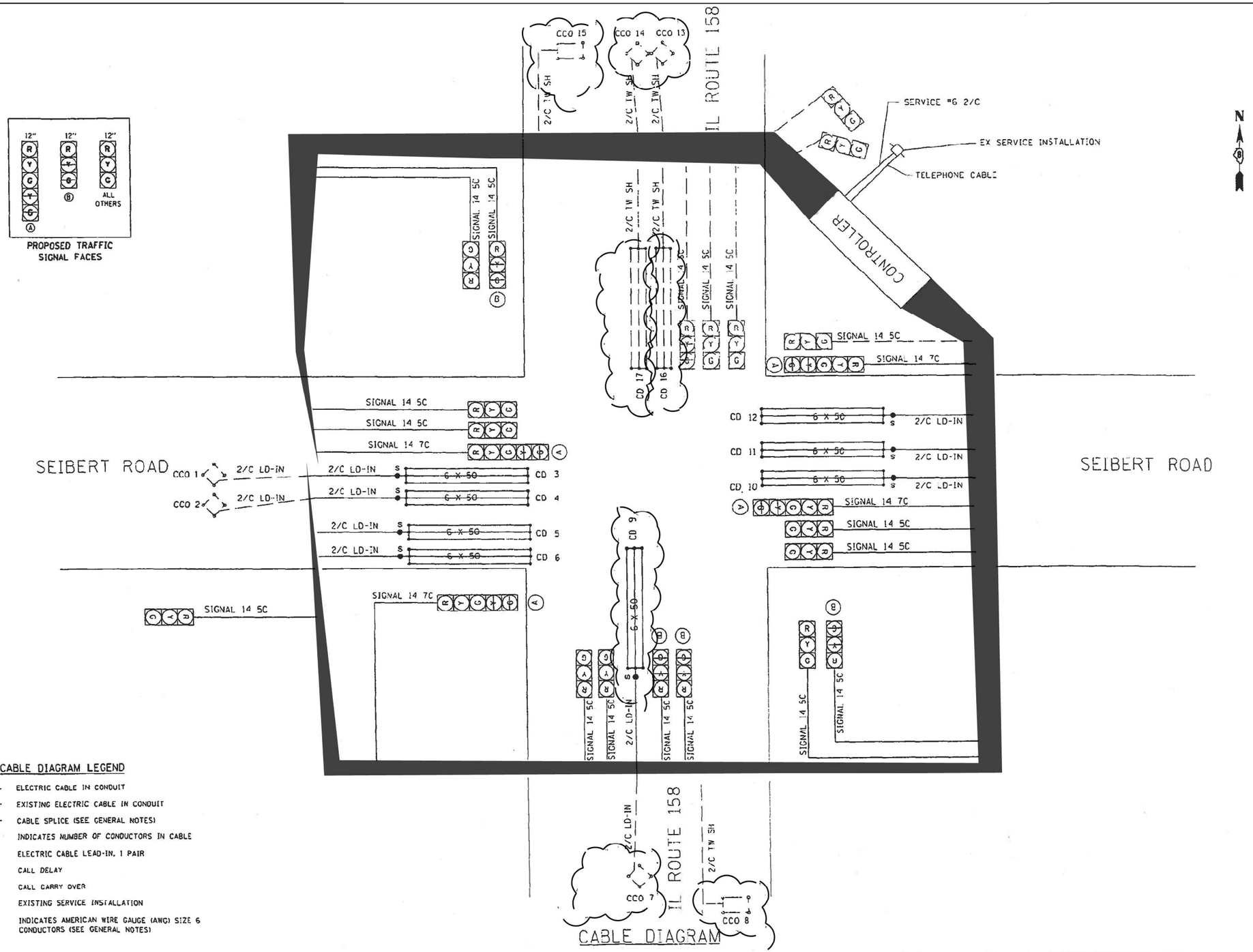

CABLE DIAGRAM LEGEND

———	ELECTRIC CABLE IN CONDUIT
· · · · · · ·	EXISTING ELECTRIC CABLE IN CONDUIT
—●—	CABLE SPLICE (SEE GENERAL NOTES)
2/C	INDICATES NUMBER OF CONDUCTORS IN CABLE
LD IN	ELECTRIC CABLE LEAD-IN, 1 PAIR
CD	CALL DELAY
CCO	CALL CARRY OVER
—□—	EXISTING SERVICE INSTALLATION
#6	INDICATES AMERICAN WIRE GAUGE (AWG) SIZE 6 CONDUCTORS (SEE GENERAL NOTES)

FILE NAME = #FILE1#	USER NAME = $USER$	DESIGNED -	REVISED -	STATE OF ILLINOIS DEPARTMENT OF TRANSPORTATION	CABLE DIAGRAM	F.A.P. RTE.	SECTION	COUNTY	TOTAL SHEETS / SHEET NO.
		DRAWN -	REVISED -			674	410-1-N	ST. CLAIR	58 / 47
	PLOT SCALE = $SCALE$	CHECKED -	REVISED -					CONTRACT NO. 76C63	
	PLOT DATE = $DATE$	DATE -	REVISED -		SCALE: 1:20 SHEET NO. 2 OF 3 SHEETS STA. TO STA.	FED. ROAD DIST. NO.	ILLINOIS	FED. AID PROJECT	

USER NAME = Jon.Dintelman	DESIGNED -	REVISED -	STATE OF ILLINOIS DEPARTMENT OF TRANSPORTATION	IL 158 & SEIBERT RD CABLE DIAGRAM	F.A.P. RTE.	SECTION	COUNTY	TOTAL SHEETS	SHEET NO.
	DRAWN -	REVISED -			647	(31,410,410-1)RS-4, (82-7K)RS-1	ST. CLAIR	33	31
	CHECKED -	REVISED -					CONTRACT NO. 76J62		
PLOT DATE = 1/30/2025	DATE -	REVISED -		SCALE: SHEET Electrical @F SHEETS STA. TO STA.		ILLINOIS	FED. AID PROJECT		

MODEL: Electrical 9 [Sheet]
FILE NAME: c:\pw_work\pwidot\dintelman\d1061113\D876J62-Typicals.dgn

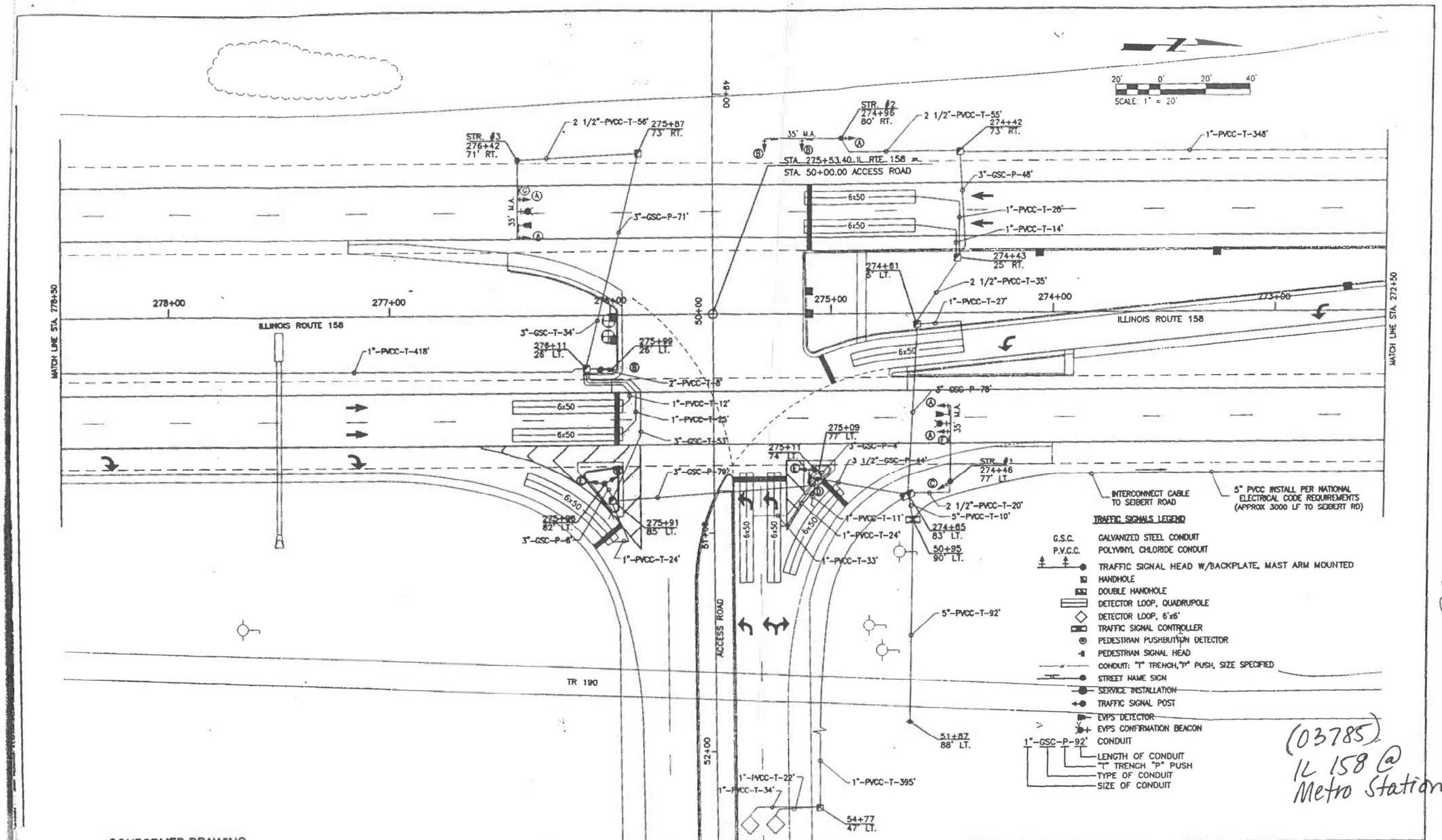

3785

(03785)
IL 158 @
Metro Station 10

CONFORMED DRAWING

REV	DATE	BY	APP.	DESCRIPTION

DESIGNED:	TGB
DRAWN:	WJ
CHECKED:	LFS
APPROVED:	RDN
DATE:	08-31-00

THOMAS G. BAKER 88-056791 PROFESSIONAL ENGINEER ILLINOIS

DATE: 8/31/00

DISCLAIMER OF RESPONSIBILITY

I hereby specify that the documents intended to be authenticated by my seal are limited to this sheet, and I hereby disclaim any responsibility for all other Drawings, Specifications, Estimates, Reports or other documents or instruments relating to or intended to be used for any part of the architectural or engineering project or survey.

Sverdrup CIVIL INC

Kennedy Associates, Inc.
Hurst-Rosche Engineers, Inc.
David Mason & Associates
Austin Tao & Associates
STV/PB Booker

ST. CLAIR COUNTY EXTENSION

Bi-State Development Agency

APPROVED: John Z. Hoffman DATE: 08/31/00

STATION 10 ROADWAY ACCESS ROAD AND ILLINOIS ROUTE 158 TRAFFIC SIGNAL PLAN

CONTRACT NO.	SC-23.04.2B
DRAWING NO.	RDCKRK10
SCALE:	1"=20'
SHEET NO.	423

MODEL: Electrical 11 [Sheet]
FILE NAME: c:\pw_work\pwidot\dintelman\d1061113\D876J62-Typicals.dgn

USER NAME = Jon.Dintelman	DESIGNED -	REVISED -	
	DRAWN -	REVISED -	
	CHECKED -	REVISED -	
PLOT DATE = 1/30/2025	DATE -	REVISED -	

STATE OF ILLINOIS
DEPARTMENT OF TRANSPORTATION

IL 158 & MERTO STATION LN
TRAFFIC SIGNAL PLAN

SCALE: | SHEET Electrical OF | SHEETS | STA. | TO STA.

F.A.P. RTE.	SECTION	COUNTY	TOTAL SHEETS	SHEET NO.
674	(31,410,410-1)RS-4, (82-7K)RS-1	ST. CLAIR	33	32
		CONTRACT NO. 76J62		
	ILLINOIS	FED. AID PROJECT		

NOTES:

SEE TABLE "DETECTOR LOOP REQUIREMENTS AND CALCULATIONS" FOR LOOP SIZE AND CALCULATED NUMBER OF TURNS.
SEE "DETAIL A" FOR INSTALLING DETECTOR LOOP WIRES IN EXISTING CONDUITS.

SCHEDULE OF QUANTITIES			TOTAL QUANTITIES	IL 158/SCOTT -TROY RD & US 50/E. HWY 50	IL 158 & WHERRY RD.	IL 158 & SEIBERT RD.	IL 158 & METRO PLAZA LN
CODE NO.		UNIT					
~~80300100~~	LOCATING UNDERGROUND CABLE	FOOT	270	30	70	70	100
~~88600600~~	DETECTOR LOOP REPLACEMENT	FOOT	4260	648	1445	817	1350

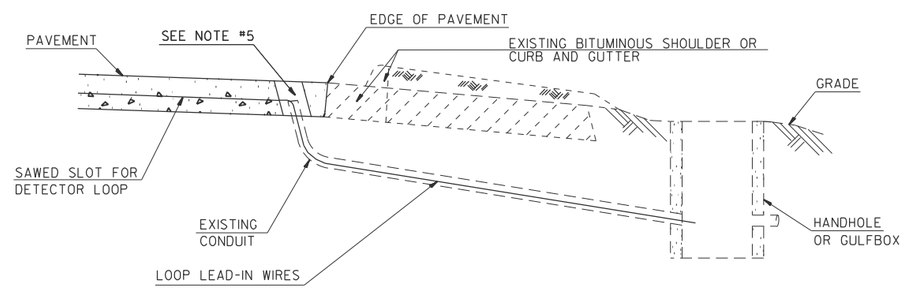

DETAIL A
(NO SCALE)

INSTALLING DETECTOR LOOP WIRES IN EXISTING CONDUIT

1. DRILL OUT PAVEMENT SEALANT AND CLEAN EXISTING CONDUIT.
2. REMOVE EXISTING DETECTOR LOOP WIRES TO HANDHOLE OR GULFBOX.
3. INSTALL NEW LOOP LEAD-IN WIRES IN EXISTING CONDUIT.
4. SPLICE NEW DETECTOR LOOP WIRES TO EXISTING LOOP LEAD-IN CABLE IN HANDHOLE OR GULFBOX.
5. FILL HOLE WITH APPROVED SEALER. PREVENT SEALER FROM ENTERING INTO CONDUIT.
6. LOCATING UNDERGROUND CABLE WILL BE PAID FOR SEPARATELY.

NOT A PAY ITEM. THE COST OF THIS WORK SHALL BE INCLUDED IN THE PAY ITEM "DETECTOR LOOP REPLACEMENT"

DETECTOR LOOP REPLACEMENT LEGEND