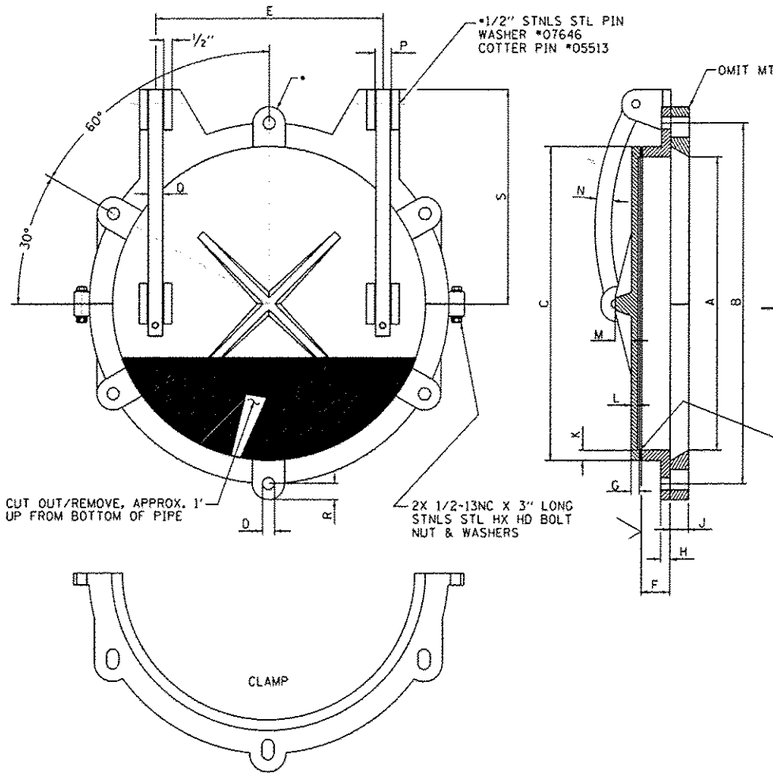

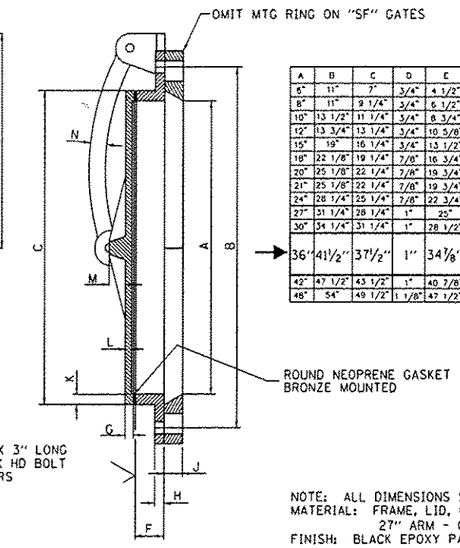

A	B	C	D	E	F	G	H	J	K	L	M	N	P	Q	R	S
6"	11"	7"	3/4"	4 1/2"	1 1/4"	1/2"	1/2"	1 1/8"	7/16"	3/8"	–	1"	1 1/4"	1"	–	7 1/2"
8"	11"	9 1/4"	3/4"	6 1/2"	1 1/2"	1/2"	1/2"	1 1/8"	1/2"	3/8"	–	1"	1 1/4"	7/8"	–	7 1/2"
10"	13 1/2"	11 1/4"	3/4"	8 3/4"	1 1/2"	3/8"	1/2"	1 1/8"	5/8"	3/8"	1"	1"	1 1/4"	1"	–	–
12"	13 3/4"	13 1/4"	3/4"	10 5/8"	1 9/16"	1/2"	1/2"	1 1/8"	5/8"	5/16"	5/8"	1 1/4"	1 1/4"	1 1/4"	–	10"
15"	19"	16 1/4"	3/4"	13 1/2"	1 1/2"	7/16"	5/8"	1 1/8"	5/8"	5/16"	1"	1 3/16"	1 1/4"	1 1/4"	–	–
18"	22 1/8"	19 1/4"	7/8"	16 3/4"	1 3/4"	1/2"	1/2"	1"	5/8"	1/2"	1 1/2"	1 7/16"	1 1/4"	1 1/4"	–	13 1/8"
20"	25 1/8"	22 1/4"	7/8"	19 3/4"	1 5/8"	5/8"	1/2"	1 1/8"	9/16"	3/8"	1 1/2"	1 3/8"	1 1/4"	1 1/4"	–	–
21"	25 1/8"	22 1/4"	7/8"	19 3/4"	1 5/8"	5/8"	1/2"	1 1/8"	9/16"	3/8"	1 1/2"	1 3/8"	1 1/4"	1 1/4"	–	14 3/4"
24"	28 1/4"	25 1/4"	7/8"	22 3/4"	1 3/4"	9/16"	11/16"	1 1/8"	1/2"	5/16"	1 1/2"	1 3/8"	1 1/4"	1 3/8"	–	16 1/8"
27"	31 1/4"	28 1/4"	1"	25"	1 3/4"	5/8"	1/2"	1 1/8"	1/2"	1/2"	2"	1 3/8"	1 1/4"	1 5/16"	–	17 5/8"
30"	34 1/4"	31 1/4"	1"	28 1/2"	1 3/4"	7/8"	1/2"	1 1/4"	7/8"	5/8"	1 1/4"	1 1/2"	1 1/4"	1 1/4"	1"	19 3/8"
36"	41 1/2"	37 1/2"	1"	34 7/8"	1 3/4"	3/4"	3/4"	1 1/4"	3/4"	5/8"	2 1/4"	1 1/2"	1 3/8"	1 1/8"	1"	22 7/8"
42"	47 1/2"	43 1/2"	1"	40 7/8"	1 3/4"	1"	3/4"	1 1/4"	3/4"	5/8"	2 1/4"	1 1/2"	1 3/8"	1 3/8"	1"	–
48"	54"	49 1/2"	1 1/8"	47 1/2"	2"	1"	3/4"	1 1/4"	3/4"	5/8"	2 1/4"	1 1/2"	1 3/8"	1 3/8"	–	–

NOTE: ALL DIMENSIONS SHOWN ARE IN ENGLISH.
MATERIAL: FRAME, LID, CLAMPS, ARMS - CAST GRAY IRON ASTM A-48, CLASS 35B.
27" ARM - CAST DUCTILE IRON, ASTM A-536, 55+KSI YIELD.
FINISH: BLACK EPOXY PAINT.

FLAP GATE (SPECIAL) DETAIL

N.T.S.

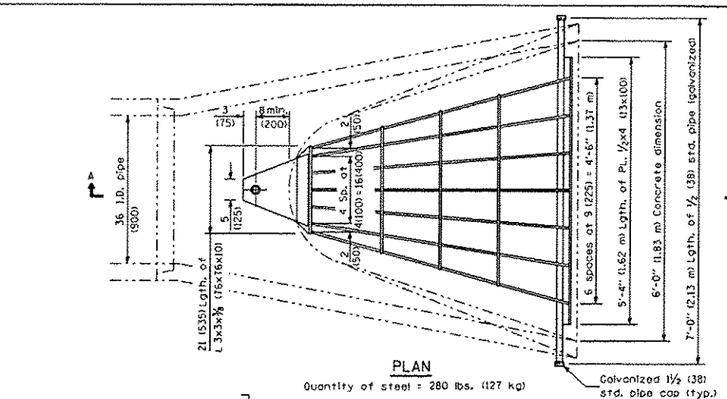

PLAN

Quantity of steel = 280 lbs. (127 kg)

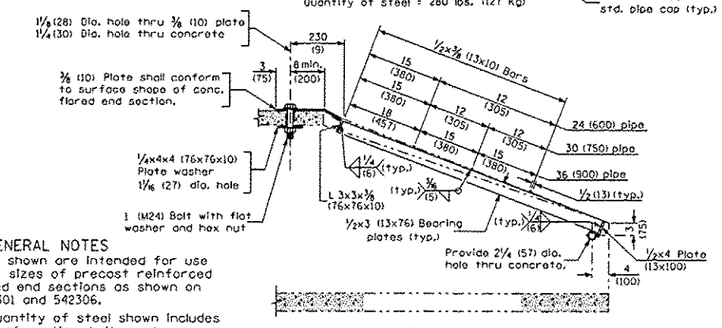

SECTION A-A

GENERAL NOTES

Grating details shown are intended for use with particular sizes of precast reinforced concrete flared end sections as shown on standards 542301 and 542306.

Approximate quantity of steel shown includes total quantity of grating, bolts, nuts, washers and steel pipe.

Holes in the precast concrete flared end sections shall be cored to the diameters noted. If cone-out on the other end of the hole occurs, the hole shall be filled with grout to correct the diameter of the hole.

GRATING FOR CONCRETE FLARED END SECTION

N.T.S.

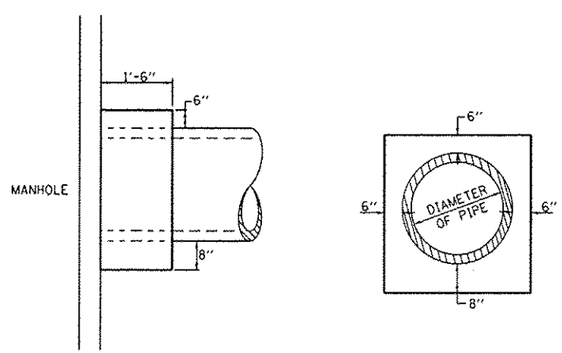

SIDE VIEW

END VIEW

TABULATION

DIAMETER OF PIPE	CL SI CONC CU YDS EST
12"	0.24
15"	0.29
18"	0.32
24"	0.44
30"	0.56
36"	0.66
42"	0.80
48"	0.93
54"	1.07
60"	1.22
72"	1.55

THE CONCRETE COLLAR SHALL BE PAID FOR AT THE CONTRACT UNIT PRICE PER CUBIC YARD FOR CONCRETE COLLAR, AS SHOWN ON THE PLANS.

CLASS SI CONCRETE SHALL BE USED THROUGHOUT.

DETAILS OF CONCRETE COLAR

PIPE TO MANHOLE
N.T.S.

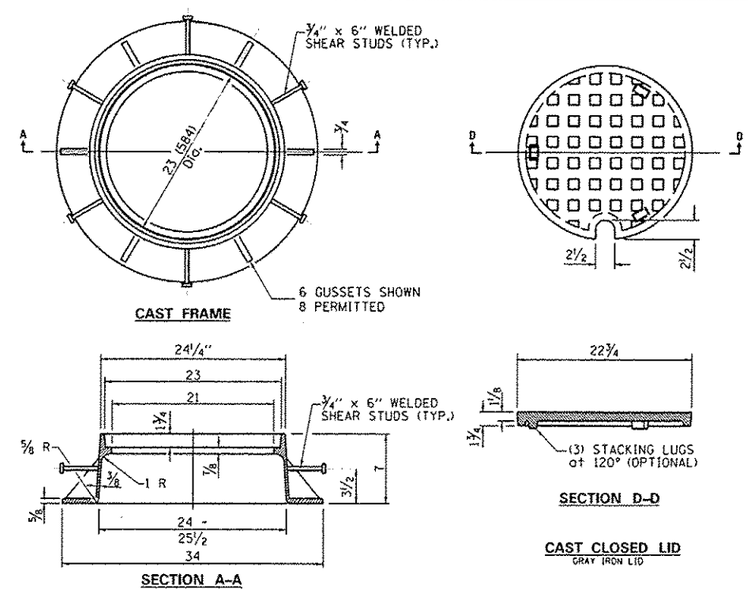

FRAMES AND LIDS (SPECIAL)

N.T.S.

FILE NAME = L:\IDOT\11006610\WD_7\Draw\CADD.Sheets\050.SESCDETAILS.dgn	USER NAME = Matt Overbay	DESIGNED - CPD	REVISED -
		DRAWN - CPD	REVISED -
	PLOT SCALE = 20.0000 ' / in.	CHECKED - MJO	REVISED -
Default	PLOT DATE = 2/1/2013	DATE - 2/1/2013	REVISED -

STATE OF ILLINOIS
DEPARTMENT OF TRANSPORTATION

MISCELLANEOUS DETAILS
IDNR ILLINOIS BEACH STATE PARK

SCALE: | SHEET OF SHEETS | STA. TO STA.

F.A.P. RTE.	SECTION	COUNTY	TOTAL SHEETS	SHEET NO.
N/A	PARK ROADS	LAKE	60	58
	IDNR NO. 2-12-010	CONTRACT NO. 46250		
	ILLINOIS	FED. AID PROJECT		