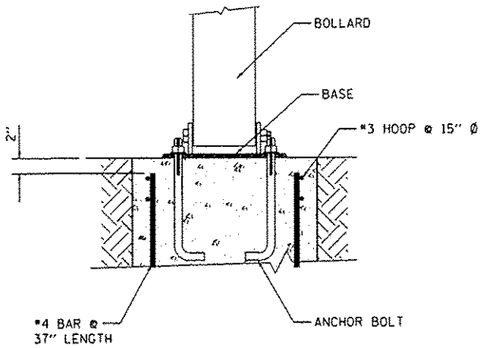

ELEVATION

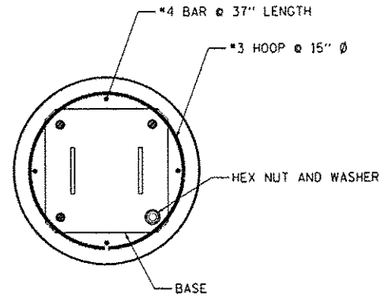

SECTION

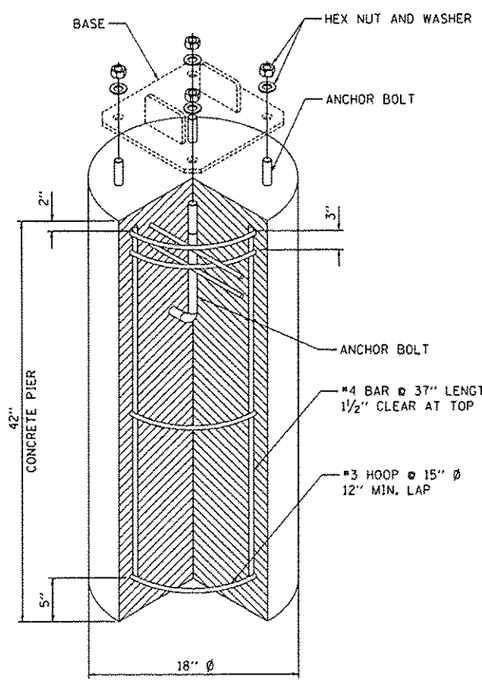

ANCHOR SYSTEM

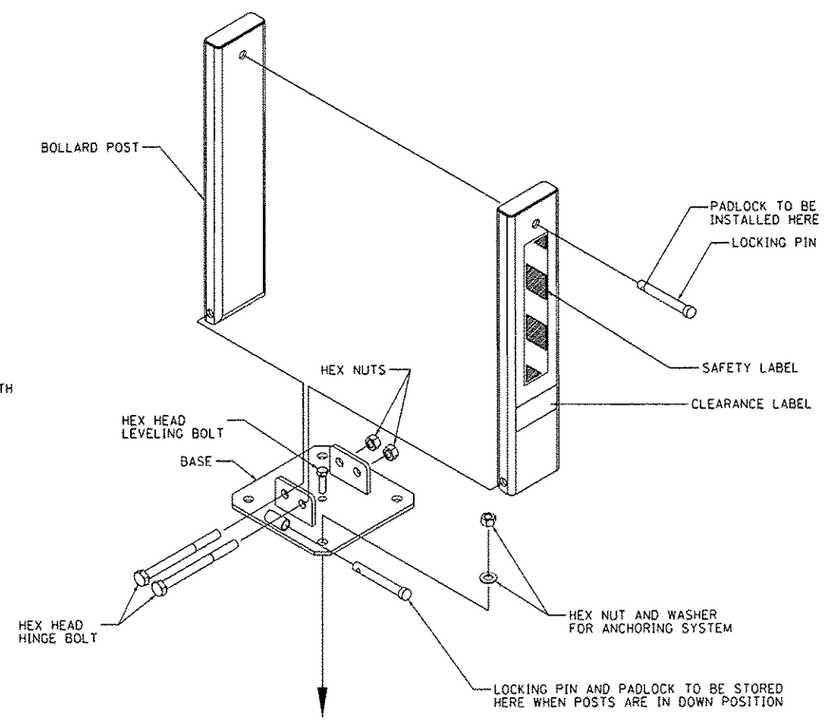

DOUBLE HINGE BOLLARD POST

FOLD DOWN BOLLARD

NOTE:
BOLLARDS SHALL BE POLYESTER DRY POWDER COATED OR PAINTED WITH ONE PRIMER COAT AND TWO FINISH COATS TO MATCH THE COLOR OF THE TUBULAR STEEL GATE POSTS.

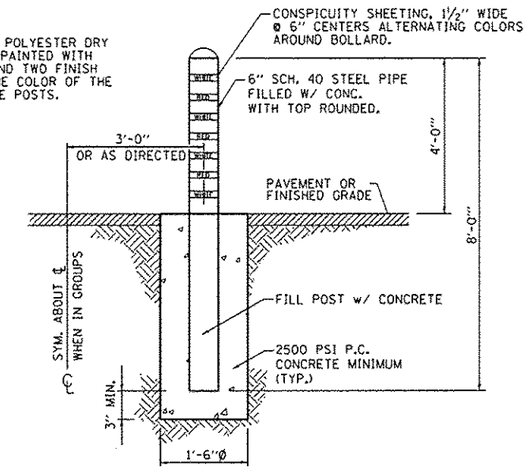

BOLLARD DETAIL

N.T.S.

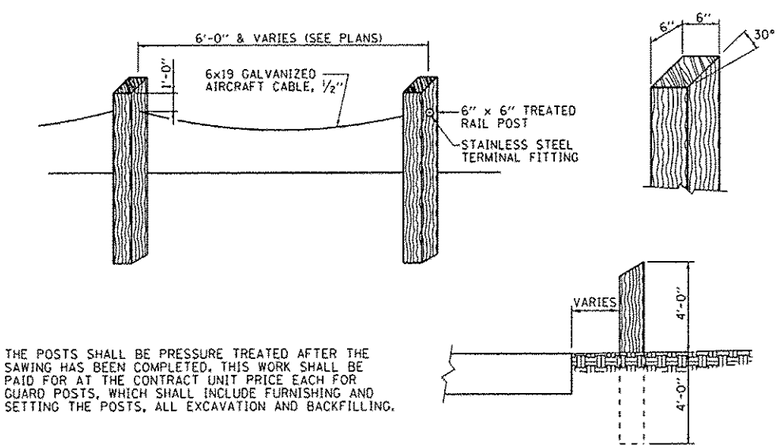

THE POSTS SHALL BE PRESSURE TREATED AFTER THE SAWING HAS BEEN COMPLETED. THIS WORK SHALL BE PAID FOR AT THE CONTRACT UNIT PRICE EACH FOR GUARD POSTS, WHICH SHALL INCLUDE FURNISHING AND SETTING THE POSTS, ALL EXCAVATION AND BACKFILLING.

WOOD BOLLARDS AND CABLE

(VEHICLE CONTROL BOLLARDS)

FILE NAME = L:\IDOT\110GG18\WO_7\Dgn\CADD_Sheets\BOD_SESCDETAILS.dgn	USER NAME = Matt Overbay	DESIGNED - CPD	REVISED -	STATE OF ILLINOIS DEPARTMENT OF TRANSPORTATION	BOLLARD DETAILS IDNR ILLINOIS BEACH STATE PARK	F.A.P. RTE.	SECTION	COUNTY	TOTAL SHEETS	SHEET NO.
		DRAWN - CPD	REVISED -			N/A	PARK ROADS	LAKE	60	60
	PLOT SCALE = 100.0000 ' / in.	CHECKED - MJO	REVISED -			IDNR NO. 2-12-010		CONTRACT NO. 46250		
Default	PLOT DATE = 2/1/2013	DATE - 2/1/2013	REVISED -		SCALE: SHEET OF SHEETS STA. TO STA.	ILLINOIS	FED. AID PROJECT			