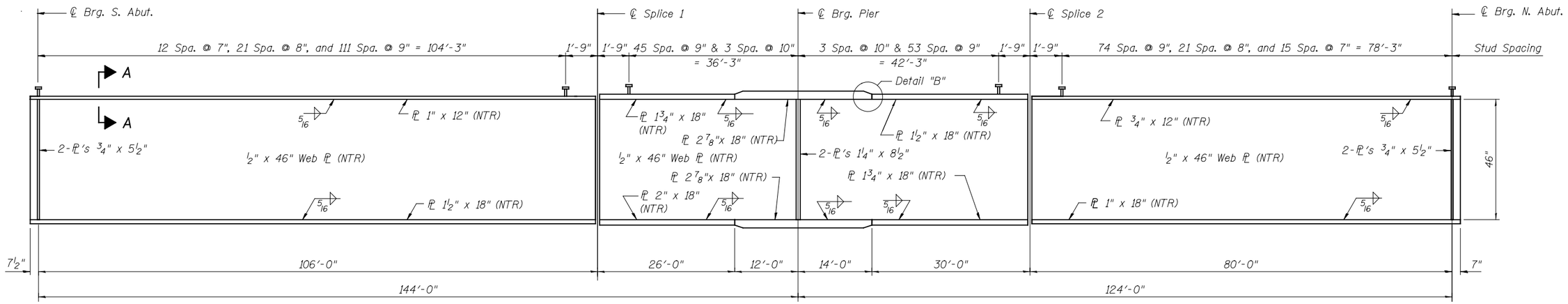

GIRDER ELEVATION

(Girders 1 thru 9 & 12 thru 20)

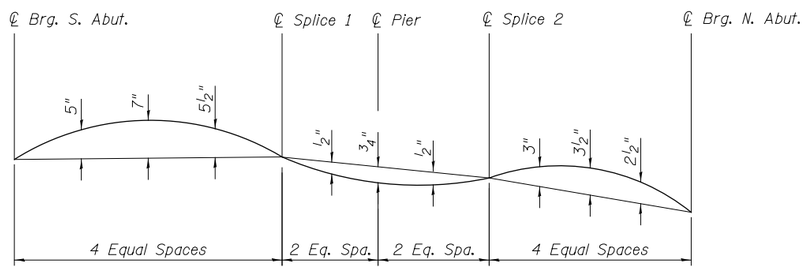

TYPICAL CAMBER DIAGRAM

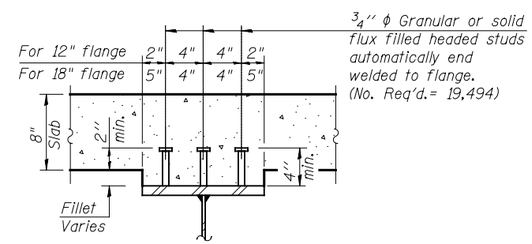

SECTION A-A

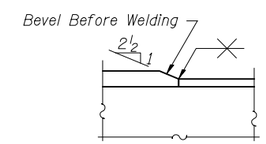

DETAIL "B"

TOP OF WEB ELEVATIONS

(For Fabrication Only)

Beam Number	Location				
	℄ Brg. S. Abut.	℄ Splice 1	℄ Pier	℄ Splice 2	℄ Brg. N. Abut.
1	657.19	657.36	656.69	656.05	653.91
2	657.34	657.50	656.83	656.19	654.03
3	657.48	657.64	656.96	656.32	654.16
4	657.62	657.77	657.10	656.45	654.29
5	657.77	657.91	657.23	656.58	654.42
6	657.91	658.05	657.36	656.72	654.54
7	658.05	658.18	657.50	656.85	654.67
8	658.20	658.32	657.63	656.98	654.80
9	658.34	658.46	657.77	657.11	654.93
10	---	---	---	---	---
11	---	---	---	---	---
12	658.35	658.45	657.75	657.09	654.89
13	658.21	658.31	657.61	656.94	654.74
14	658.08	658.16	657.46	656.79	654.59
15	657.94	658.02	657.32	656.65	654.43
16	657.80	657.88	657.17	656.50	654.28
17	657.67	657.73	657.03	656.35	654.13
18	657.53	657.59	656.88	656.20	653.97
19	657.39	657.45	656.74	656.05	653.82
20	657.25	657.30	656.59	655.91	653.67

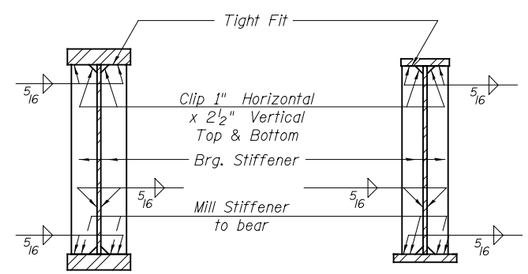

SECTION AT PIER

SECTION AT ABUTMENT

BEARING STIFFENERS

NOTES:

1. Load carrying components designated NTR shall conform to the Impact Testing Requirement, Zone 2.
2. Camber shown includes dead load deflection due to deck concrete and steel weight only.
3. See Framing Plan for diaphragm placement.
4. For bolt spacing and locations for sign attachments to fascia beams, see Bridge Mounted Sign Details.