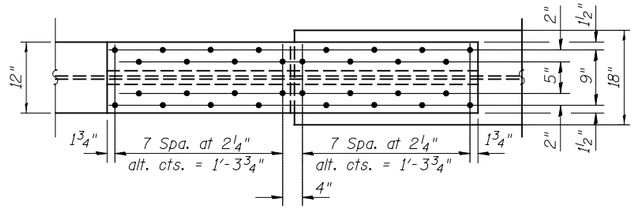

TOP PLATE

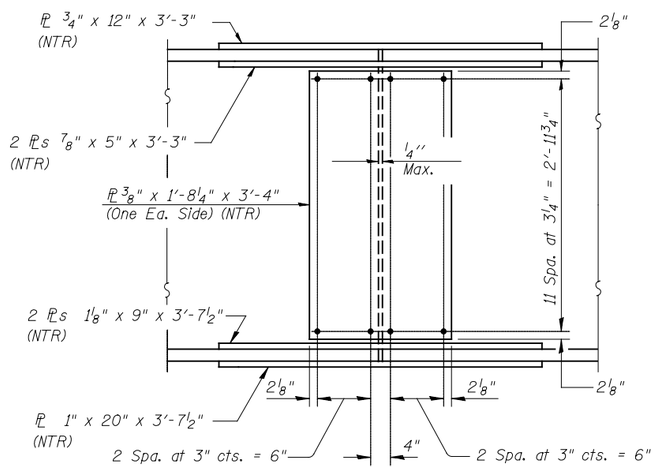

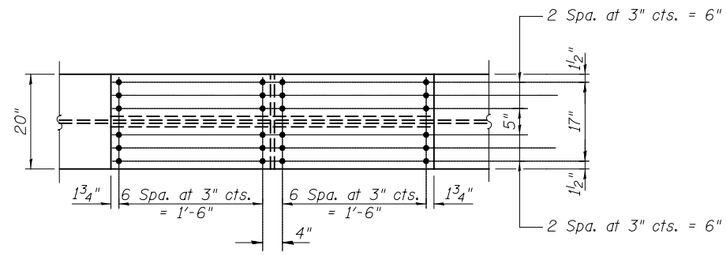

BOTTOM PLATE

FIELD SPLICE DETAIL

Splice 1 is shown. Splice 2 is similar but opposite hand.

4 Required

NOTE

Load carrying components designated NTR shall conform to the Impact Testing Requirement, Zone 2.

PATRICK ENGINEERING INC. 4970 VARSITY DRIVE LISLE, IL 60532 patrickengineering.com	USER NAME =	DESIGNED - AY	REVISED	STATE OF ILLINOIS DEPARTMENT OF TRANSPORTATION	FIELD SPLICE (GIRDERS 10 & 11) STRUCTURE NO. 016-1250	F.A.U RTE.	SECTION	COUNTY	TOTAL SHEETS / SHEET NO.
		DRAWN - AY	REVISED			2746	1616B	COOK	404 / 299
	PLOT SCALE =	CHECKED - RDW	REVISED					CONTRACT NO. 60J14	
	PLOT DATE =	DATE - 2/18/2013	REVISED		SCALE: NONE SHEET NO. S30 OF S59 SHEETS		ILLINOIS FED. AID PROJECT		

G:\IDOT\21050_006_CumberlandAve\Drawings\CADD Sheets\D160J14-sht-tsl-Splice1.dgn